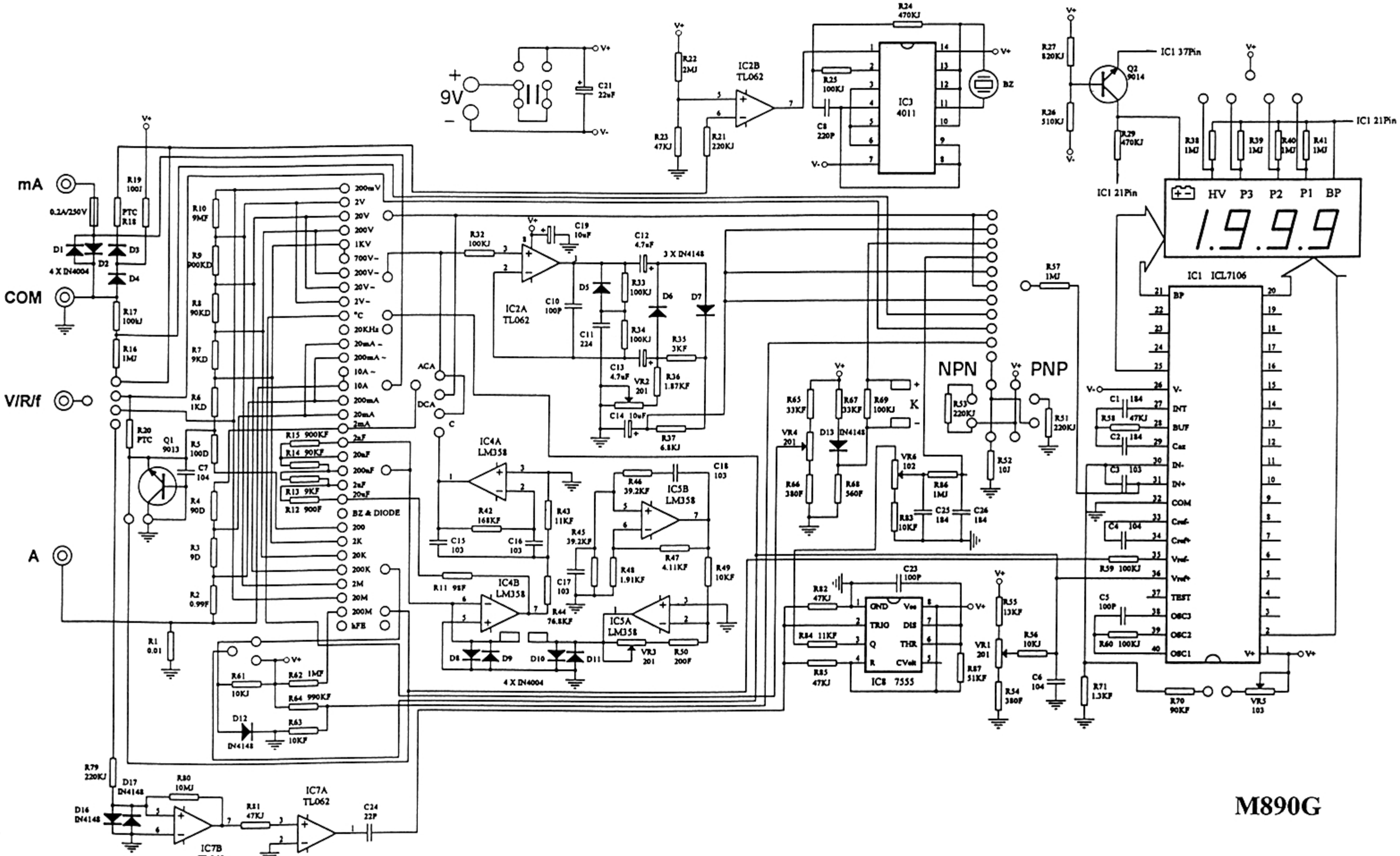

mA
COM
V/R/f
A
9V
IC2B TL062
IC3 4011
IC2A TL062
IC4A LM358
IC4B LM358
IC5A LM358
IC5B LM358
IC7A TL062
IC7B TL062
IC8 7555
IC1 ICL7106
IC1 37Pin
IC1 21Pin
HV P3 P2 P1 BP
1.9.9.9
NPN
PNP
BZ
K
ACA
DCA
4 X IN4004
3 X IN4148
BZ & DIODE

M890G