JVC

SERVICE MANUAL

DIGITAL VIDEO CAMERA

GR-D93US,GR-D94US

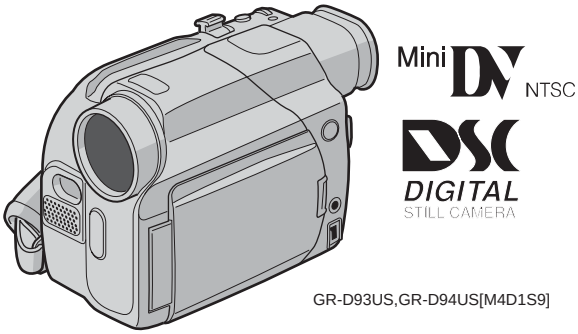

For disassembling and assembling of MECHANISM ASSEMBLY, refer to the SERVICE MANUAL No.86700(MECHANISM ASSEMBLY).

TABLE OF CONTENTS

1 PRECAUTION 1-3
2 SPECIFIC SERVICE INSTRUCTIONS 1-5
3 DISASSEMBLY 1-6
4 ADJUSTMENT 1-16
5 TROUBLESHOOTING 1-19

COPYRIGHT © 2004 VICTOR COMPANY OF JAPAN, LIMITED

No.YF020
2004/2

PARTS LIST

SAFETY PRECAUTION

Parts identified by the ⚠ symbol are critical for safety. Replace only with specified part numbers.

1. EXPLODED VIEW

1.1 PACKING AND ACCESSORY ASSEMBLY <M1>

The instruction manual to be provided with this product will differ according to the destination.

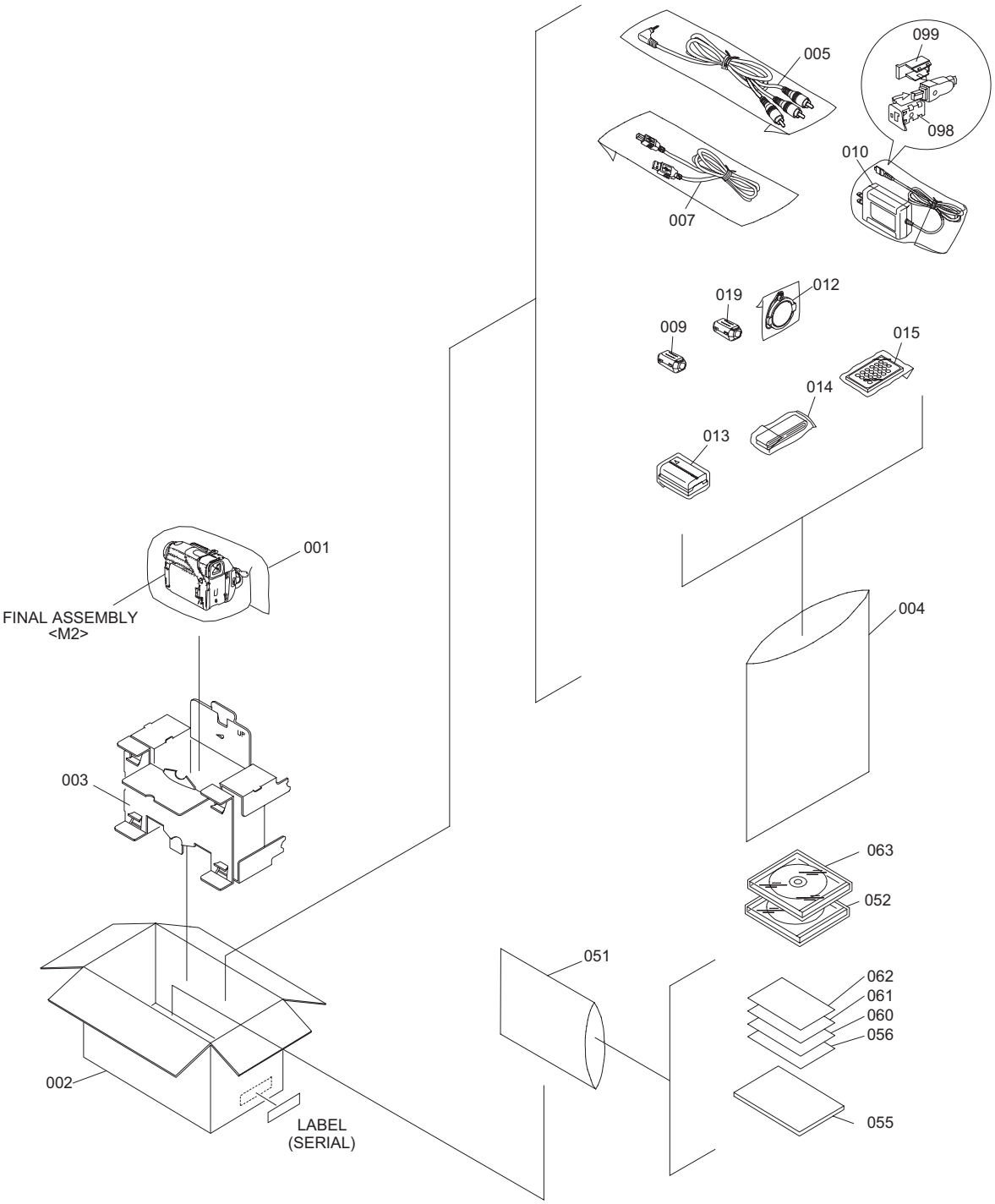

1.2 FINAL ASSEMBLY <M2>

BEWARE OF BOGUS PARTS

Parts that do not meet specifications may cause trouble in regard to safety and performance. We recommend that genuine JVC parts be used.

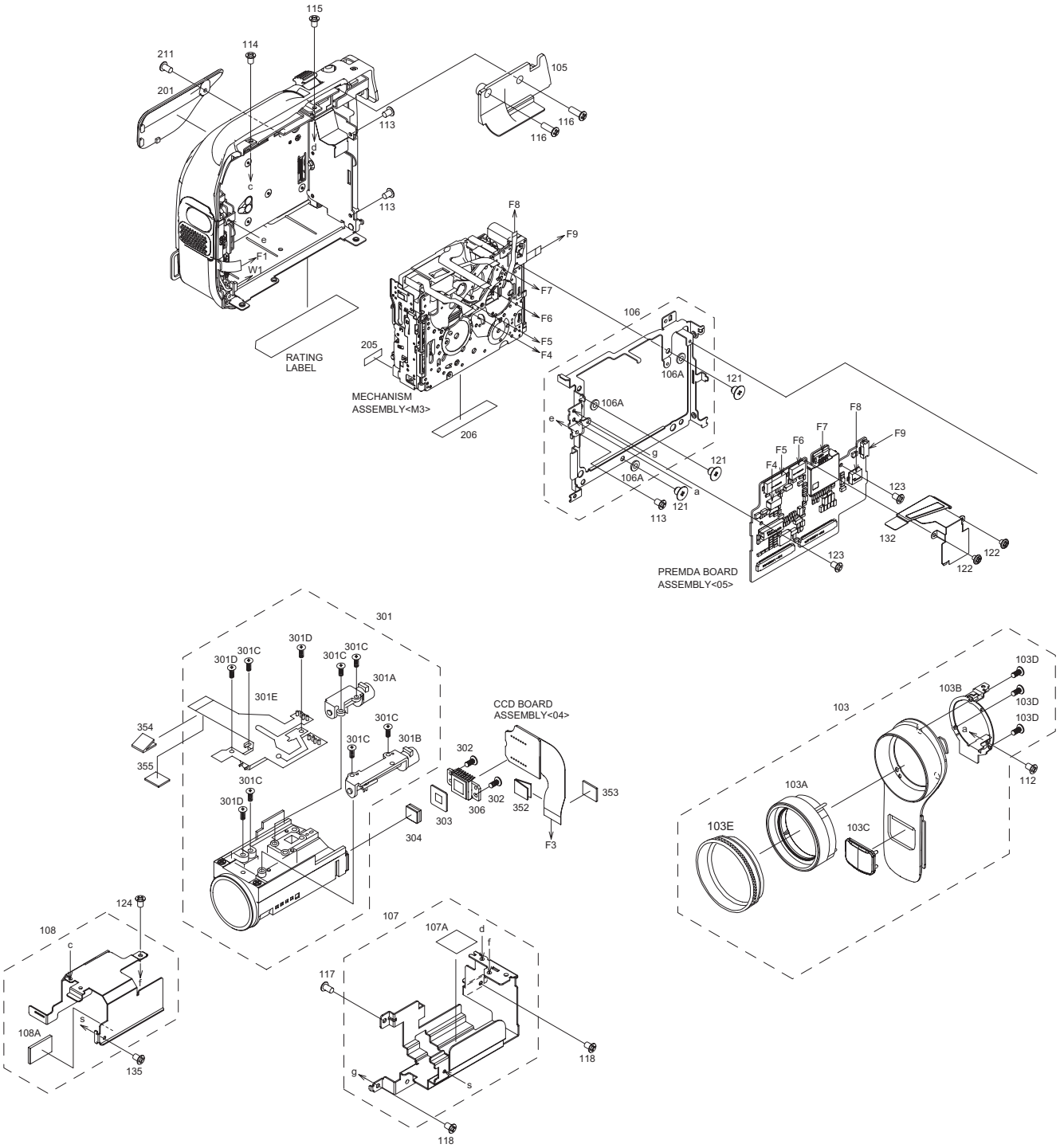

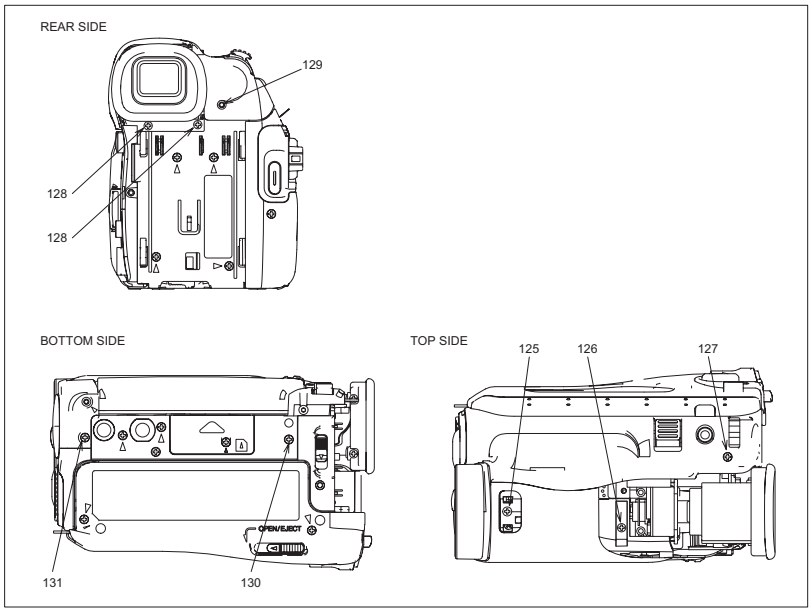
REAR SIDE
129
128
128
BOTTOM SIDE
OPEN/EJECT
131
130
TOP SIDE
125
126
127

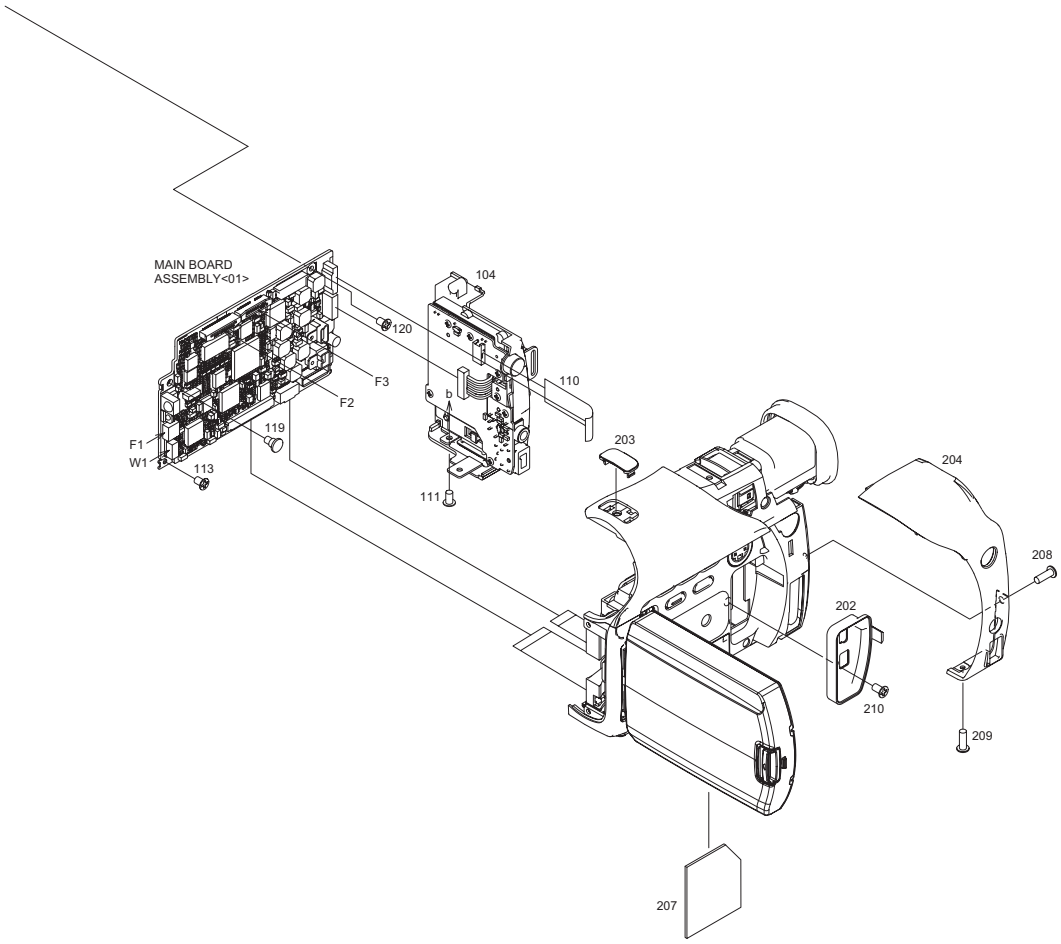
MAIN BOARD
ASSEMBLY<01>
104
120
F3
110
F2
b
119
F1
W1
113
111
203
204
208
202
210
209
207

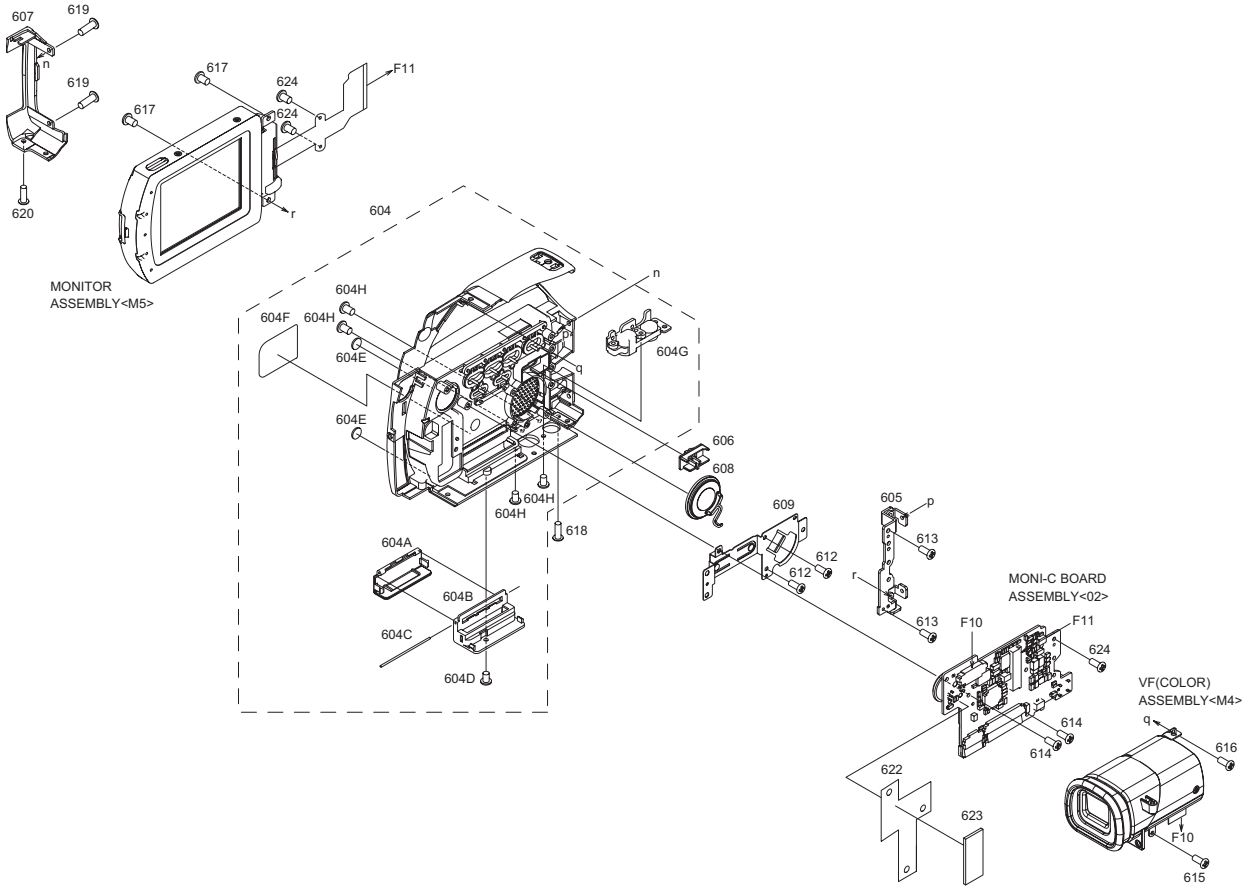
607
619
619
620
617
617
624
624
F11
r
MONITOR
ASSEMBLY<M5>
604
604F
604H
604H
604E
604E
604H
604H
604G
n
q
606
608
618
604A
604B
604C
604D
609
605
p
613
612
612
r
613
MONI-C BOARD
ASSEMBLY<02>
F10
F11
624
614
614
622
623
VF(COLOR)
ASSEMBLY<M4>
q
616
F10
615

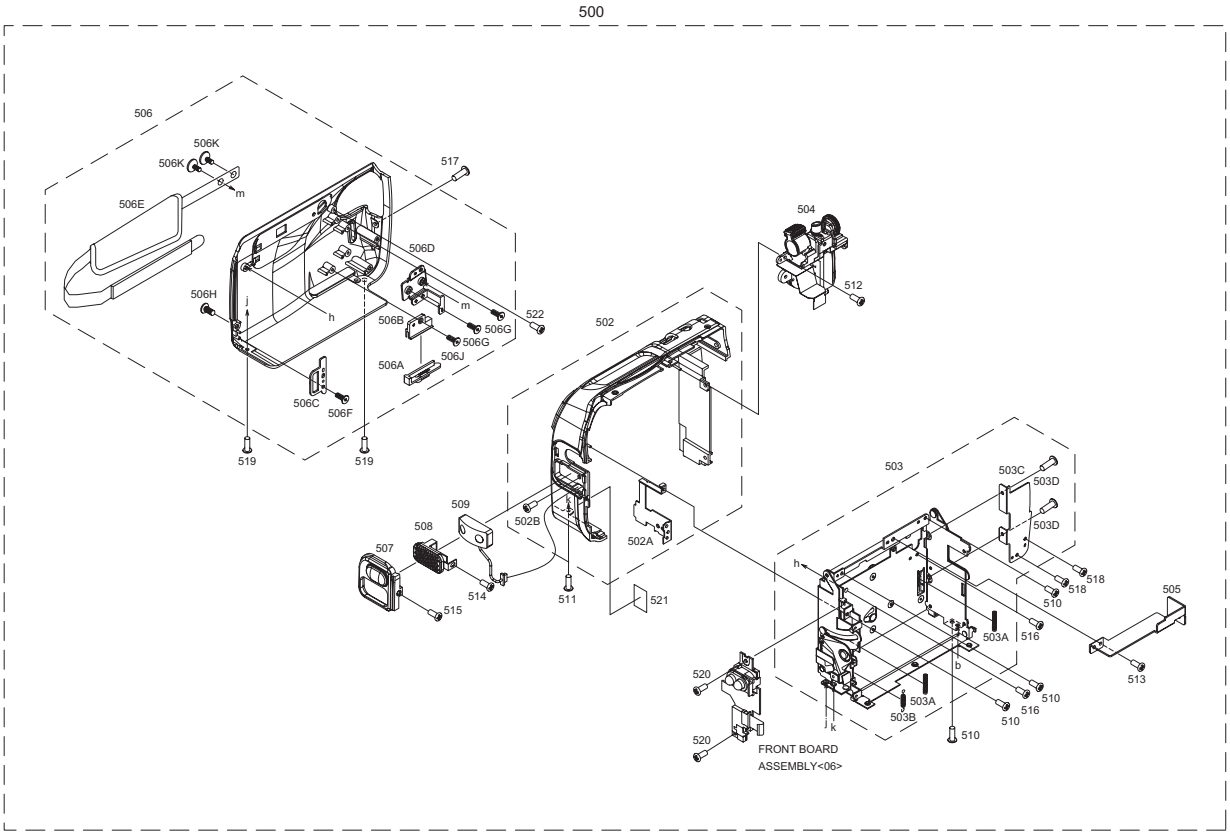
500
506
506K
506K
m
506E
517
506D
506H
h
m
506B
506G
506G
506J
506A
506C
506F
522
519
519
504
512
502
502B
502A
509
508
507
514
515
511
521
503
503C
503D
503D
518
518
510
505
h
503A
516
b
513
520
503A
503B
516
510
510
k
510
520
FRONT BOARD
ASSEMBLY<06>

1.3 MECHANISM ASSEMBLY <M3>

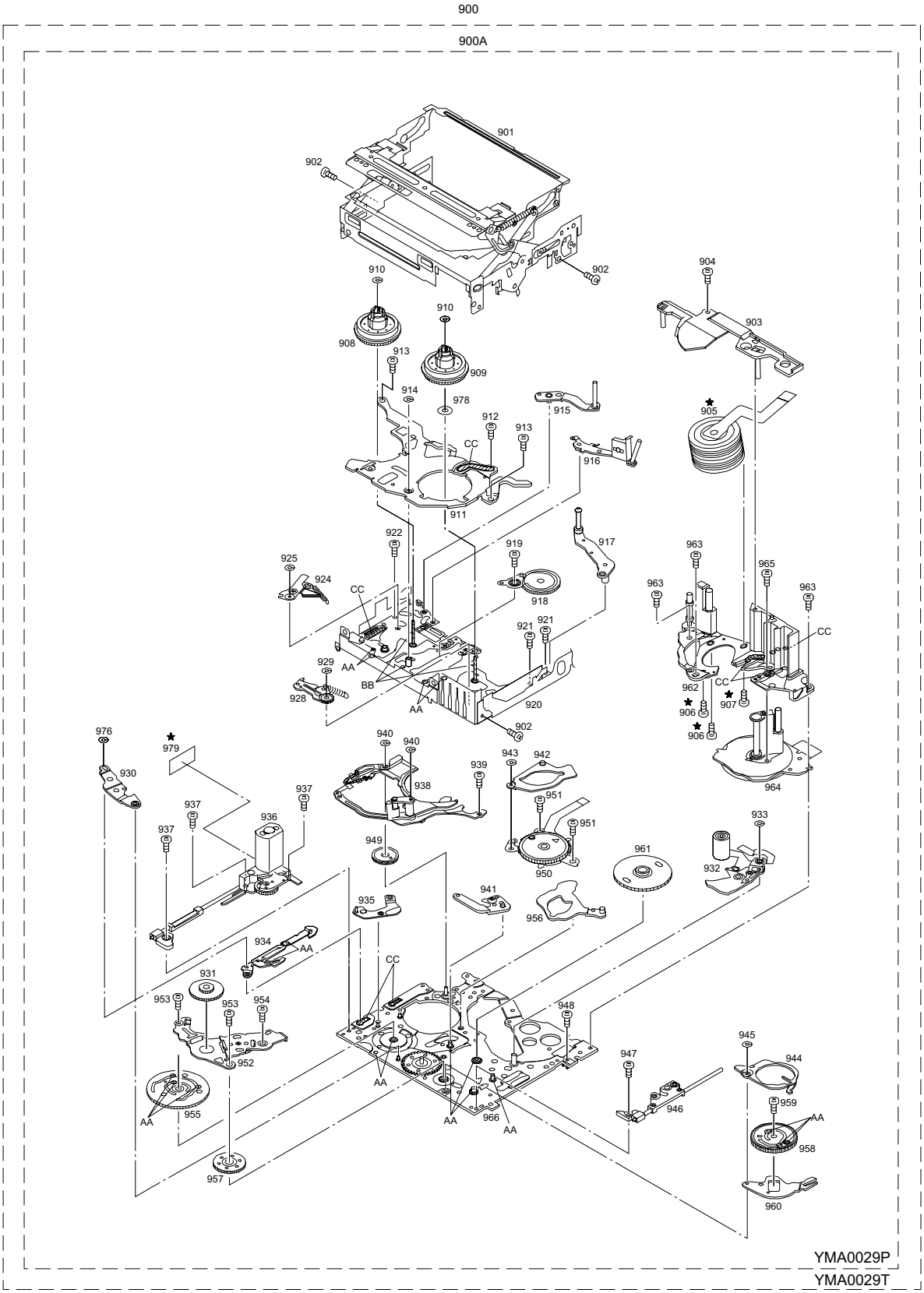

Classification	Part No.	Symbol in drawing
Grease	KYODO-SH-JB	AA
Oil	YTU94027	BB
Grease (HANARL)	RX-410R	CC

NOTE1: The section marked in AA, BB and CC indicate lubrication and greasing areas.

NOTE2: Mark ★ is not contained in 900A.

1.4 VF(COLOR) ASSEMBLY <M4>

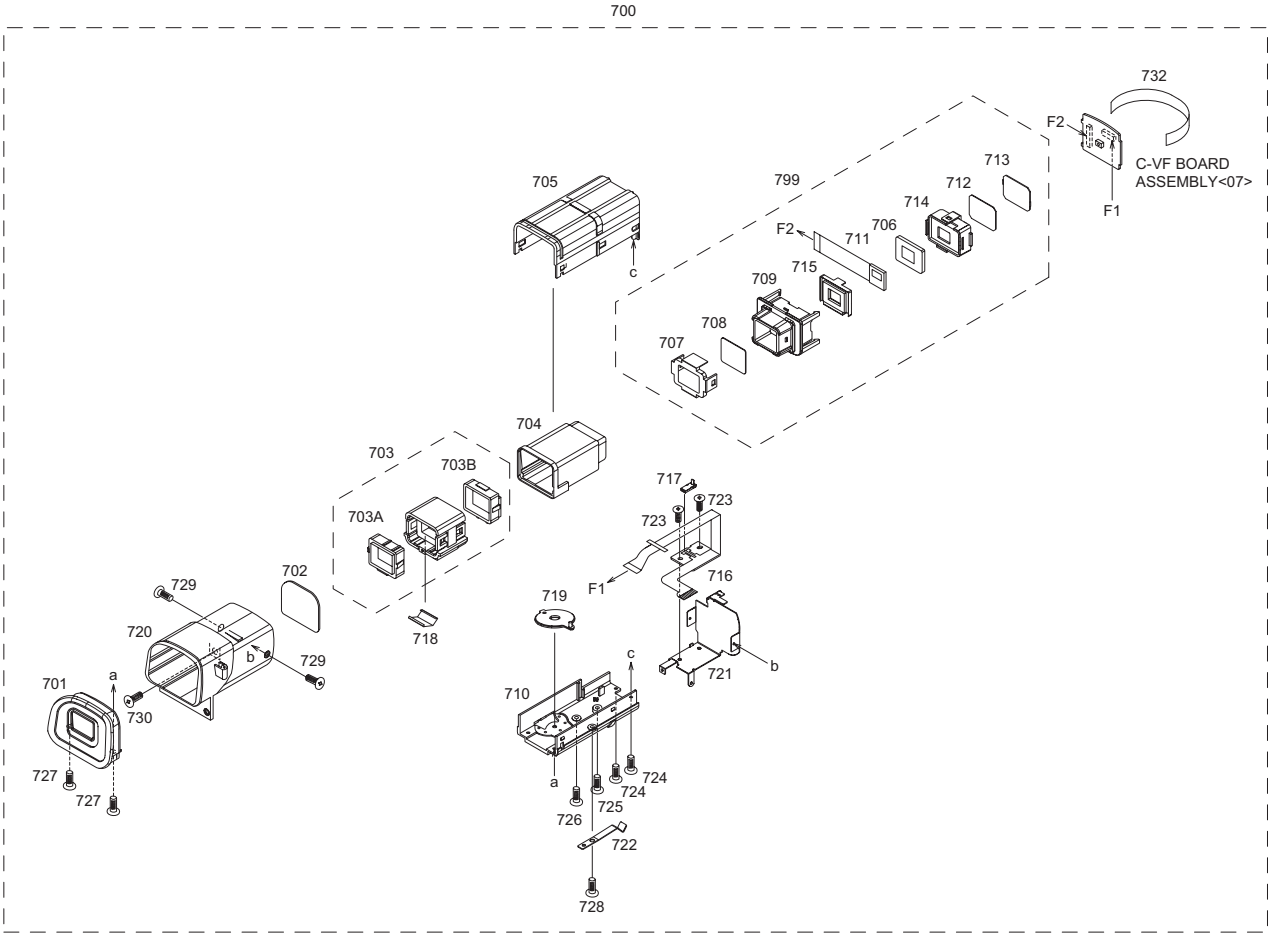

1.5 MONITOR ASSEMBLY <M5>

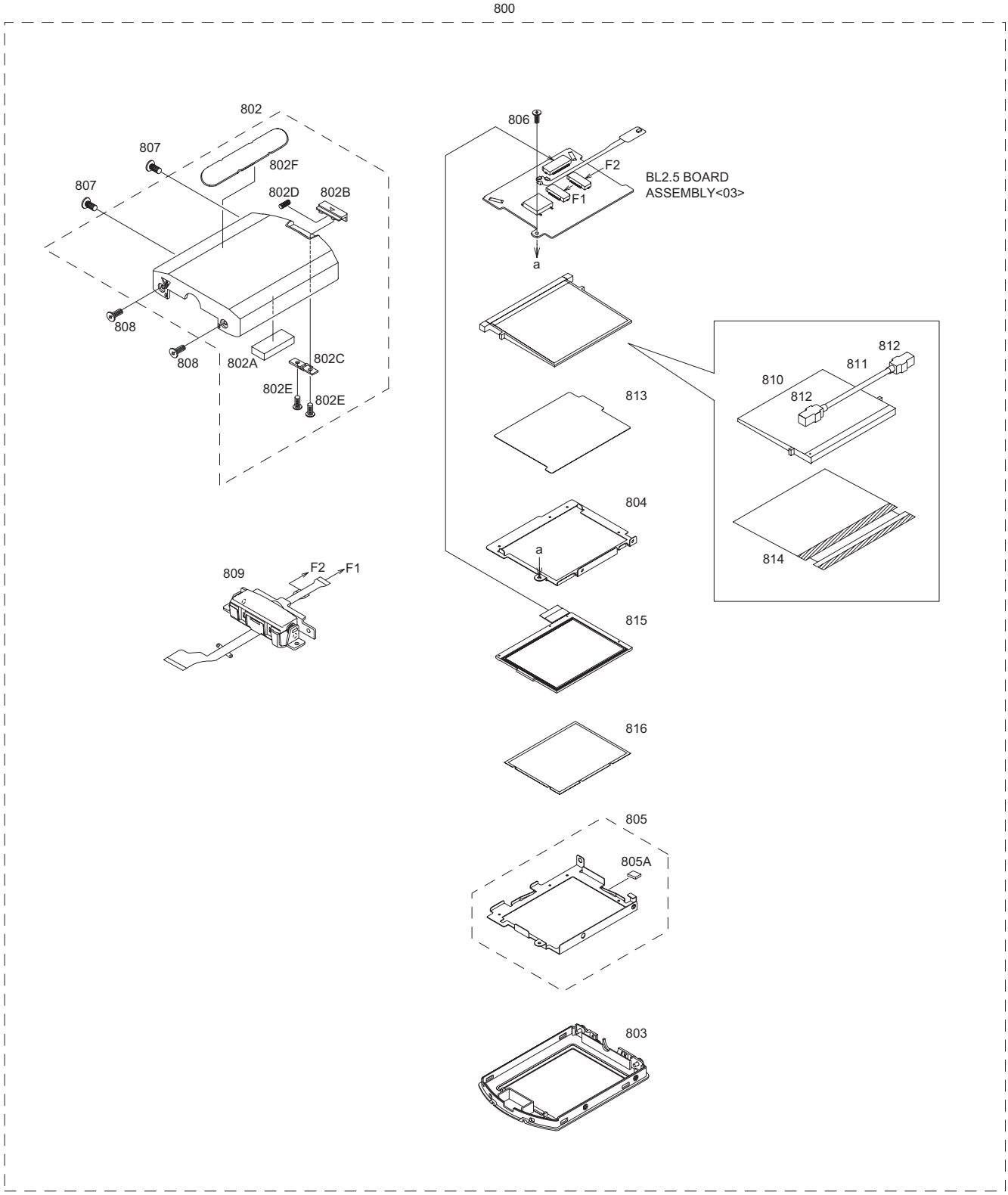

2. PARTS LIST

PACKING AND ACCESSORY ASSY <M1>

⚠ Symbol No.	Part No.	Part Name	Description	Local
001	LY30023-029A	POLY BAG	JAPAN	
002	LY33696-008A	PACKING CASE	JAPAN	
003	LY33697-001C	CUSHION		
004	QPA02503505P	POLY BAG	ACC. 25cm x 35cm	
005	QAM0507-001	A/V CABLE		
007	QAM0538-001	USB CABLE	USB	
009	QQR0491-002	FERRITE CORE	S	
⚠ 010	LY21103-001A	AC ADAPTER	AP-V14U	
⚠ 010 or	LY21154-001A	AC ADAPTER	AP-V15U	
012	LY33828-001C	CAP(HOOD)ASSY		
⚠ 013	LY32566-001A	BATTERY PACK ASSY	BN-V408U-B	
014	LY21105-002A	SHOULDER STRAP		
015	LY21020-001A	REMOCON	RM-V718U	
019	QQR0491-002	FERRITE CORE	USB	
051	QPA02003506	POLY BAG	DOCUMENT 20cm x 35cm	
052	LY32210-062A	CD ROM ASSY		
⚠ 055	LYT1196-001B	INST BOOK(EN)	(ENGLISH)	D93US
⚠ 055	LYT1196-002B	INST BOOK(FR)	(FRENCH)	D93US
⚠ 055	LYT1196-003B	INST BOOK(SP)	(SPANISH)	D93US
⚠ 055	LYT1265-001A	INST BOOK(EN)	(ENGLISH)	D94US
⚠ 055	LYT1265-002A	INST BOOK(FR)	(FRENCH)	D94US
⚠ 055	LYT1265-003A	INST BOOK(SP)	(SPANISH)	D94US
056	LYT1197-001A	INST BOOK(SOFT.EN)	(SOFT.ENGLISH)	
056	LYT1197-003A	INST BOOK(SOFT.FR)	(SOFT.FRENCH)	
056	LYT1197-005A	INST BOOK(SOFT.SP)	(SOFT.SPANISH)	
060	BT-51005-6	WARRANTY INF.		
061	BT-51034-1	REGIST CARD		
062	BT-52006-2	WARRANTY CARD		
063	LY32210-043A	CD ROM ASSY		
098	LY34145-001B	COVER1(DC PLUG)		
099	LY34146-001B	COVER2(DC PLUG)		

FINAL ASSEMBLY <M2>

⚠ Symbol No.	Part No.	Part Name	Description	Local
103	LY21156-001A	FRONT COVER ASSY		D93US
103	LY21156-002A	FRONT COVER ASSY		D94US
103A	LY33824-001A	HOOD(SCREW)		
103B	LY33825-001A	BRACKET(HOOD)		
103C	LY33826-001A	WINDOW(IR)		
103D	LY30031-003A	SPECIAL SCREW	BKT-SCREW(x3)	
103E	LY33827-001A	HOOD		
⚠ 104	LY21088-001C	REAR UNIT ASSY		
105	LY33672-001C	COVER(ZOOM)		
106	LY33673-001B	BRACKET(MECHA)ASSY		
106A	LY42796-003A	BUSH	(x3)	
107	LY33986-001B	BRACKET(OP 1)ASSY		
107A	LY30034-005A	SPACER(A)		
108	LY34180-001A	BRACKET(OP2)ASSY		
108A	LY30034-033A	SPACER(A)		
110	QUQ105-1202AA	FFC WIRE	MAIN-R FFC	
111	LY30031-0E1A	SPECIAL SCREW	RC-BKARM	
112	LY30031-010A	SPECIAL SCREW	BKHO-BKOP	
113	LY30031-0D4A	SPECIAL SCREW	BKME-BKAR(x4)	
114	LY30031-010A	SPECIAL SCREW	LC-BKOP2	
115	LY30031-010A	SPECIAL SCREW	LC-BKOP1	
116	LY30031-003A	SPECIAL SCREW	HOLZ-LC(x2)	
117	LY30031-026A	SPECIAL SCREW	BKOP-OP	
118	LY30031-010A	SPECIAL SCREW	BKOP-BKME(x2)	
119	LY30032-001A	SPECIAL SCREW	MAIN-BKME	
120	LY30033-001A	SPECIAL SCREW(W)	MAIN-BKME	
121	LY30032-002A	SPECIAL SCREW	BKME-ME(x3)	
122	LY30031-015A	SPECIAL SCREW	PRE-ME(x2)	
123	LY30033-001A	SPECIAL SCREW(W)	MDA-BKME(x2)	
124	LY30031-010A	SPECIAL SCREW	OP1-OP2	
125	LY30031-010A	SPECIAL SCREW	UC-OP1	
126	LY30031-010A	SPECIAL SCREW	UC-OP2	
127	LY30031-021A	SPECIAL SCREW	LC-VF	
128	LY30031-021A	SPECIAL SCREW	VF-RC(x2)	
129	LY30031-028A	SPECIAL SCREW	LC-ZOOM	
130	LY30031-010A	SPECIAL SCREW	UC-BKSP	
131	LY30031-006A	SPECIAL SCREW	COVHI-BKSP	
132	LY33388-002A	SHIELD COVER(PR)		
135	LY30031-010A	SPECIAL SCREW	OP1-OP2	
201	LY33677-001C	COVER(ADJUST)		
202	LY33678-001B	COVER(JIG)		
203	LY33699-001A	ORNAMENT(TOP)		
204	LY21085-012A	COVER(UPPER)		D93US
204	LY21085-013A	COVER(UPPER)		D94US
205	LY40699-002A	LABEL(PUSH)		
206	LY32001-004A	LABEL(HOUSING)		
207	QAM0404-002	MEMORY CARD	MMC 8MB*	D93US
207	QAM0405-002	MEMORY CARD	MMC 16MB*	D94US
208	LY30031-008A	SPECIAL SCREW	COVUP-RC	
209	LY30031-008A	SPECIAL SCREW	COVUP-UC	
210	LY30031-010A	SPECIAL SCREW	JIG	
211	LY30031-032A	SPECIAL SCREW	ADJ	
301	J7C-120A	OP BLOCK ASSY	JVM	
301A	LY31571-001A	FOCUS MOTOR UNIT		
301B	LY31572-001A	ZOOM MOTOR UNIT		
301C	LY30727-002A	TAPPING SCREW	(x5)	
301D	LY30727-001A	TAPPING SCREW	(x2)	
301E	LY33978-001A	IRIS MOTOR UNIT		
302	QYSPSGU1750ZA	TAP SCREW	JVM(x2)	
303	LY43494-001A	SHEET	JVM	
304	LY43384-001A	OPTICAL LPF	JVM	
306	LYH30529-001A	CCD BASE ASSY		
352	LY44554-001A	BUSTERAID	EMC(CCD)	
353	LY30030-061A	SPACER(A)	EMC(CCD)	
354	LY44554-001A	BUSTERAID	EMC(OP)	
355	LY30030-061A	SPACER(A)	EMC(OP)	

***NOTE:**
DATA FILE is not contained in MEMORY CARD of the service part.

UPPER ASSEMBLY <M2>

⚠ Symbol No.	Part No.	Part Name	Description	Local
⚠ 604	LY21084-005B	UPPER CASE ASSY		
604A	LY33662-001D	COVER(SD)		
604B	LY33663-001C	HOLDER(SD)		
604C	LY44374-001A	SHAFT(SD)		
604D	LY30031-007A	SPECIAL SCREW	HOLDSD-UC	
604E	LY42350-003A	FOOT	(x2)	
604F	LY33657-002A	CAUTION LABEL(VF)		
604G	LY33658-001C	BASE		
604H	LY30031-010A	SPECIAL SCREW	UC-BASE(x4)	
605	LY33659-001C	BRACKET(HINGE)		
606	LY33679-001D	KNOB(SLIDE)	SW	
607	LY33660-001B	COVER(HINGE)		
608	QAS0157-001	SPEAKER		
609	LY33661-001A	BRACKET(SPK)		
612	LY30031-003A	SPECIAL SCREW	BKTSPK-UC(x2)	
613	LY30031-003A	SPECIAL SCREW	BKTHIN-UC(x2)	
614	LY30031-008A	SPECIAL SCREW	M.PWB-UC(x2)	
615	LY30031-008A	SPECIAL SCREW	VF-UC	
616	LY30031-002A	SPECIAL SCREW	VF-UC	
617	LY30031-009A	SPECIAL SCREW	HIN-BKTHIN(x2)	
618	LY30031-006A	SPECIAL SCREW	UC-BKTHIN	
619	LY30031-006A	SPECIAL SCREW	COVHIN-BKT(x2)	
620	LY30031-002A	SPECIAL SCREW	COVHIN-UC	
622	LY44555-001A	SHEET(MO)	MONI_C PWB	
623	LY30030-0Z3A	SPACER(A)		
624	LY30031-038A	SPECIAL SCREW	M.PWB-UC(x3)	

LOWER ASSEMBLY <M2>

⚠ Symbol No.	Part No.	Part Name	Description	Local
500	LU04D103A	LOWER UNIT ASSY		
502	LY21078-003A	LOWER CASE ASSY		

⚠ Symbol No.	Part No.	Part Name	Description	Local
502A	LY33639-001A	SHIELD PLATE(MIC)		
502B	LY30031-016A	SPECIAL SCREW	LC-SHLD	
503	LY21079-001D	ARM ASSY		
503A	LY30002-046B	COMPRESION SPRING	(x2)	
503B	LY43973-001A	TENSION SPRING		
503C	LY33641-001A	BRACKET(REAR)		
503D	LY30031-001A	SPECIAL SCREW	BKTR-ARM(x2)	
504	LY10467-001A	ZOOM UNIT		
505	LY33642-001B	BRACKET(ZOOM)		
506	LY21082-002B	CASSETTE COVER ASSY		
506A	LY33643-001D	KNOB(LOCK)C		
506B	LY33644-001A	HOLDER(LOCK)C		
506C	LY33645-001C	HOOK(G.BELT)		
506D	LY33647-001B	BRACKET(G.BELT)		
506E	LY21083-002A	GRIP BELT		
506F	LY30031-002A	SPECIAL SCREW	C.COV-HOOK	
506G	QYSLSF2040RA	TAP SCREW	C.CO-BKT(G)(x2)	
506H	LY30031-029A	SPECIAL SCREW	C.CO-BKT(G)	
506J	LY30031-003A	SPECIAL SCREW	C.CO-KNOB	
506K	LY30031-004A	SPECIAL SCREW	BKT(GB-GB)(x2)	
507	LY33648-001C	COVER(MIC)ASSY		
508	LY33651-001A	PLATE(MIC)		
509	LY33965-001A	MIC		
510	LY30031-003A	SPECIAL SCREW	BKARM-L.C(x4)	
511	LY30031-0D9A	SPECIAL SCREW	LC-BKARM	
512	LY30031-003A	SPECIAL SCREW	ZOO-L.C	
513	LY30031-003A	SPECIAL SCREW	BKZO-LC	
514	LY30031-005A	SPECIAL SCREW	PLTM-SHLD	
515	LY30031-005A	SPECIAL SCREW	COVM-SHLD	
516	LY30031-037A	SPECIAL SCREW	ARM-CAS(x2)	
517	LY30031-021A	SPECIAL SCREW	POW-CAS	
518	LY30031-003A	SPECIAL SCREW	BKRE-CAS(x2)	
519	LY30031-0D8A	SPECIAL SCREW	CAS-ARM(x2)	
520	LY30031-0D9A	SPECIAL SCREW	FPWB-BKARM(x2)	
521	LY30030-0Y4A	SPACER(A)		
522	LY30031-003A	SPECIAL SCREW	POW-CAS	

MECHANISM ASSEMBLY <M3>

⚠ Symbol No.	Part No.	Part Name	Description	Local
900	YMA0029T	MECHA(A)ASSY	Y/E Y07442	
900A	YMA0029P	MECHA(A)ASSY	JVM/BJVC	
901	LY32870-001P	CASSETTEHOUSING ASSY		
902	YQ43893-8	MINI SCREW	(x3)	
903	LYH30420-001A	UPPER BASE ASSY		
904	QYSPSPU1425M	SCREW	M1.4 x 2.5mm	
905	YDV2102B	DRUM ASSY	M/B SET022	
906	LY42820-001A	DAMP.SCREW ASSY	JVM/BJVC(x2)	
907	LY42820-002A	DAMP.SCREW ASSY	JVM/BJVC	
908	LY31538-001F	REEL DISK ASSY		
909	LY31538-002H	REEL DISK ASSY		
910	YQ44246	SLIT WASHER	(x2)	
911	LY10372-001H	REEL COVER ASSY		
912	LY42120-002A	MINI SCREW		
913	LY41945-003A	MINI SCREW	(x2)	
914	YQ44246	SLIT WASHER		
915	LY43725-001F	TENSION ARM ASSY		
916	LYH40269-001A	SLANT POLE ARM ASSY		
917	LY43731-001F	TU ARM ASSY		
918	LY31531-001E	SWING ARM ASSY		
919	YQ43893-9	MINI SCREW		
920	LYH30424-001A	SLIDE DECK FINAL ASSY		
921	YQ43893	MINI SCREW	(x2)	
922	LY43023-001A	MINI SCREW		
924	LYH30419-001A	PAD ARM ASSY		
925	YQ44246	SLIT WASHER		
928	LYH40270-001A	TU BRAKE ASSY		
929	YQ44246	SLIT WASHER		
930	LY43684-001B	TENSION CONTROL LEVER ASSY		
931	LY32861-001A	CENTER GEAR		
932	LY31516-001H	PINCH ROLLER ARM FINAL ASSY		
933	YQ44246	SLIT WASHER		
934	LY43681-001A	TENSION CONTROL PLATE ASSY		
935	LY43687-001A	BRAKE CONTROL LEVER ASSY		
936	LYH30421-001A	MOTOR BRACKET ASSY		
937	YQ43893	MINI SCREW	(x3)	
938	LYH30422-001A	GUIDE RAIL ASSY		
939	YQ43893	MINI SCREW		
940	YQ44246	SLIT WASHER	(x2)	
941	LY32843-001D	SLIDE LEVER2 ASSY		
942	LY43690-001A	LOADING PLATE ASSY		
943	YQ44246	SLIT WASHER		
944	LY32858-001B	EJECT LEVER		
945	YQ44246	SLIT WASHER		
946	LYH40271-001A	BASE R ASSY		
947	YQ43893	MINI SCREW		
948	LY41945-001B	MINI SCREW		
949	LY43665-001A	MODE GEAR		
950	QSW0876-004	ROTARY ENCODER		
951	YQ43893	MINI SCREW	(x2)	
952	LY32860-001D	GEAR COVER ASSY		
953	YQ43893	MINI SCREW	(x2)	
954	YQ43893-4	MINI SCREW		
955	LY43676-001A	MAIN CAM ASSY		
956	LY41941-001B	SLIDE ARM ASSY		
957	LY43678-001A	CONNECT GEAR 2		
958	LY43679-001B	SUB CAM ASSY		
959	LY42120-001A	MINI SCREW		
960	LY43692-001A	CONTROL ARM ASSY		
961	LY32859-001A	REEL GEAR 1		
962	LY31508-004D	DRUM BASE ASSY		
963	QYSPSPU1425M	MINI SCREW	(x3)	
964	QAR0142-001	CAPSTAN MOTOR		
965	YQ43893	MINI SCREW		
966	LY10367-001K	MAIN DECK ASSY		
976	YQ44246	SLIT WASHER		
978	LY42047-005A	WASHER		
979	LY44502-001A	SPACER	JVM/BJVC	

VF(COLOR) ASSEMBLY <M4>

⚠ Symbol No.	Part No.	Part Name	Description	Local
700	VU04D102A	VF UNIT ASSY		
701	LY33690-001C	EYE CUP		
702	LY43961-001B	SHEET(LENS)		
703	LY32472-001A	LENS ASSY		
703A	LY43356-001A	LENS(A)		
703B	LY43357-001A	LENS(B)		
704	LY33688-001A	GUIDE LENS(VF)		
705	LY21095-001C	UPPER CASE(VF)		
706	LY43957-001A	CUSHION(LCD)		
707	LY32997-001A	SHEET HOLD(VF)		
708	LY43953-001A	SHEET 1(POLA)		
709	LY32994-001B	HOLDER LCD(VF)		
710	LY21094-001C	BOTTOM CASE(VF)		
711	QLD0306-001	LCD MODULE		
712	LY43954-001A	SHEET 2(POLA)		
713	LY43955-001A	SHEET (DIFF)		
714	LY32998-001A	LCD HOLD(VF)		
715	LY33002-001B	GUIDE(LCD)		
716	QAL0523-001	FPC	VF-FPC	
717	NSW0200-001X	LEVER SWITCH	TEZUKE	
718	LY43868-001A	SPRING(LENS)		
719	LY33689-001C	LEVER(LENS)		
720	LY21096-001C	HOLDER(VF)		
721	LY33691-001A	BRACKET(VF)		
722	LY33692-001A	SPRING(VF)		
723	LY30031-016A	SPECIAL SCREW	PWB-BKT(x2)	
724	LY30031-031A	SPECIAL SCREW	BC-UC(x2)	
725	LY30031-030A	SPECIAL SCREW	BC-HLDLCD	
726	LY30031-031A	SPECIAL SCREW	BC-GUID	
727	LY30032-005A	SPECIAL SCREW	EYE-GUID(x2)	
728	LY30031-026A	SPECIAL SCREW	SPR-LC	
729	LY30031-016A	SPECIAL SCREW	HLDVF-BKT(x2)	
730	LY30031-010A	SPECIAL SCREW	HLDVF-BKT	
732	LY30030-0Y5A	SPACER(A)		
799	LY33821-001A	LCD UNIT ASSY		

MONITOR ASSEMBLY <M5>

⚠ Symbol No.	Part No.	Part Name	Description	Local
⚠ 800	MU04D105A	MONITOR UNIT ASSY		
⚠ 802	LY21092-005A	MONITOR COVER ASSY		
802A	LY30030-0Z1B	SPACER(A)		
802B	LY33680-001B	KNOB(LOCK)M		
802C	LY33681-001B	HOLDER(LOCK)M		
802D	LY30002-022A	COMPRESION SPRING		
802E	LY30031-008A	SPECIAL SCREW	(x2)	
802F	LY44519-001A	POP STICKER(2)		
803	LY10471-001C	MONITOR CASE		
804	LY33683-001A	LCD FRAME(MONI)		
805	LY33969-001A	SHIELD CASE ASSY		
805A	LY30030-0Z8A	SPACER(A)	FOR S.CASE	
806	LY30033-001A	SPECIAL SCREW(W)	M.PWB-S.C	
807	LY30031-0E2A	SPECIAL SCREW	MCOV-MCAS(x2)	
808	LY30031-013A	SPECIAL SCREW	MCOV-HING(x2)	
809	LY33685-001B	MONITOR HINGE ASSY		
810	LY44481-001A	LIGHT SCREEN		
811	QLL0142-001	LAMP		
812	LY43936-001A	HOLDER(LAMP)	(x2)	
813	LY33684-001A	SHEET(DIFF.)		
814	LY43396-001A	SHEET(REFLECT)		
815	QLD0294-001	LCD MODULE		
816	LY44495-001D	SHEET(MONI.)		

MAIN BOARD ASSEMBLY <01>

⚠ Symbol No.	Part No.	Part Name	Description	Local
PW1	YB10452UA-02	MAIN BOARD ASSY		
IC1001	UPD703166-M22	IC(MICRO C ROM)	MASK	
IC1001 or	UPD70F3166M22	IC(MICRO C ROM)	FLASH	
IC1001 or	UPD70F3166M22A	IC(MICRO C ROM)	PP FLASH	
IC1002	MB90097PFV149-X	IC(MICRO C ROM)	MB90099	
IC1003	SN74AHC1G00K-X	IC		
IC1003 or	SN74AHC1G00DC-X	IC		
IC1004	S-89220ACNC-W	IC		
IC1005	X25330S8I-2.5-X	IC		
IC1005 or	AT25320N-10SI-X	IC	ATMEL	
IC1005 or	M95320-WMN6W-X	IC	ST MICRO	
IC1005 or	25LC320-I/SN-X	IC		
IC1005 or	CAT25C32SI-X	IC	CATALYST	
IC1006	RS5C314-X	IC		
IC1007	IC-PST3423U-X	IC		
IC1007 or	S-80823CNNB-X	IC		
IC1009	SN74AHC1G08K-X	IC		
IC1009 or	SN74AHC1G08DC-X	IC(DIGITAL)		
IC1010	R1160N251B-X	IC		
IC1101	BA10358F-XE	IC		
IC1101 or	LM358DR-X	IC		
IC1151	RPM7138-S	IR DETECT UNIT		
IC2101	AK5355VT-X	IC		
IC2201	AK4564VQ	IC		
IC3001	JCY0152	IC	JCY0152	
IC3002	BU2501FV-X	IC		
IC3005	JCY0136-X	IC	JCY0136-X	
IC3201	JCP8075	IC		
IC3701	BA7665AFS-X	IC		
IC3731	MM1504XN-X	IC		
IC4201	HD49340HNP-X	IC		
IC4202	MM1613BN-X	IC		
IC4301	JCY0183	IC		
IC4302	R1160N121B-X	IC		
IC4802	LM324PW-X	IC	HOLE AMP	
IC4804	NJM3414AV-X	IC	DRIVE AMP	
IC4805	MM6564XFBE-X	IC	DAMPER	
IC4951	AN41902A-V	IC		
IC5501	CXD3602AR	IC		
IC5502	CY2302SC-1-X	IC		
IC5503	MM1613AN-X	IC		
IC5504	MM1613DN-X	IC		
IC6001	FA3698F	IC		
IC6601	BD3987FV-X	IC		

⚠ Symbol No.	Part No.	Part Name	Description	Local
IC6801	R1224N102G-X	IC		
IC8001	TMS320DSC24GHKL	IC	DSC24	
IC8002	K4S643232F-TC60	IC	SDRAM	
IC8002 or	HY57643220CT55	IC	SDRAM	
IC8002 or	HY57643220CT7	IC	SDRAM	
IC8003	MR27T1602F13SLA	IC(MICRO C ROM)	WRITE ONCE	
IC8006	BU2360FV-X	IC	A.VCO W	
IC8301	ISP1181ABS	IC	USB DRV	
Q1001	DTA114EE-X	DIGI TRANSISTOR		
Q1001 or	PDTA114EE-X	DIGI TRANSISTOR		
Q1001 or	RN2102-X	DIGI TRANSISTOR		
Q1001 or	BCR183T-X	DIGI TRANSISTOR		
Q1002	UMC3N-W	DIGI TRANSISTOR		
Q1003	UMC3N-W	DIGI TRANSISTOR		
Q1004	UMC3N-W	DIGI TRANSISTOR		
Q1005	DTC143XE-X	DIGI TRANSISTOR		
Q1005 or	UN921FJ-X	DIGI TRANSISTOR		
Q1006	DTC144EE-X	DIGI TRANSISTOR		
Q1007	2SC4617/QR/-X	TRANSISTOR		
Q1007 or	BC847BT-X	TRANSISTOR		
Q1007 or	2SD2216J/QR/-X	TRANSISTOR		
Q1008	DTC124EE-X	DIGI TRANSISTOR		
Q1008 or	PDTC124EE-X	DIGI TRANSISTOR		
Q1008 or	BCR141T-X	DIGI TRANSISTOR		
Q1009	2SJ347-X	MOS FET		
Q1010	DTC144EE-X	DIGI TRANSISTOR		
Q1101	RPM-22PB	PHOTO TRANSISTOR		
Q2202	UMX1N-W	PAIR TRANSISTOR		
Q2202 or	BC847S-X	PAIR TRANSISTOR		
Q2401	2SC4617/QR/-X	TRANSISTOR		
Q2401 or	BC847BT-X	TRANSISTOR		
Q2403	2SC4617/QR/-X	TRANSISTOR		
Q2403 or	BC847BT-X	TRANSISTOR		
Q3001	2SC4617/RS/-X	TRANSISTOR		
Q3001 or	BC847BT-X	TRANSISTOR		
Q3002	2SC4617/RS/-X	TRANSISTOR		
Q3002 or	BC847BT-X	TRANSISTOR		
Q3701	UMT1N-W	PAIR TRANSISTOR		
Q3701 or	XP4401-W	TRANSISTOR		
Q3701 or	BC856S-X	PAIR TRANSISTOR		
Q3702	BC847PN-X	PAIR TRANSISTOR		
Q3704	2SA1774/RS/-X	TRANSISTOR		
Q3704 or	BC857BT-X	TRANSISTOR		
Q3705	UMT1N-W	PAIR TRANSISTOR		
Q3705 or	XP4401-W	TRANSISTOR		
Q3705 or	BC856S-X	PAIR TRANSISTOR		
Q3731	2SC4617/RS/-X	TRANSISTOR		
Q3731 or	2SD2216J/RS/-X	TRANSISTOR		
Q3731 or	BC847BT-X	TRANSISTOR		
Q3733	BC847PN-X	PAIR TRANSISTOR		
Q3734	2SC4617/RS/-X	TRANSISTOR		
Q3734 or	2SD2216J/RS/-X	TRANSISTOR		
Q3734 or	BC847BT-X	TRANSISTOR		
Q3735	BC847PN-X	PAIR TRANSISTOR		
Q4801	2SC4655J/BC/-X	TRANSISTOR	HALL DRIVE	
Q4802	2SC4617/RS/-X	TRANSISTOR	DRIVE-	
Q4802 or	2SD2216J/RS/-X	TRANSISTOR	DRIVE-	
Q4803	DTC144EE-X	DIGI TRANSISTOR	SS MINI	
Q4803 or	RN1104-X	DIGI TRANSISTOR	SS MINI	
Q4803 or	PDTC144EE-X	DIGI TRANSISTOR	SS MINI	
Q4803 or	UN9213J-X	DIGI TRANSISTOR	SS MINI	
Q4804	DTA144EE-X	DIGI TRANSISTOR	SS MINI	
Q4804 or	RN2104-X	DIGI TRANSISTOR	SS MINI	
Q4804 or	PDTA144EE-X	DIGI TRANSISTOR	SS MINI	
Q4804 or	UN9113J-X	DIGI TRANSISTOR	SS MINI	
Q4805	2SC4617/RS/-X	TRANSISTOR	SS MINI	
Q4805 or	2SD2216J/RS/-X	TRANSISTOR	SS MINI	
Q4806	2SA1774/QR/-X	TRANSISTOR		
Q4806 or	2SB1462J/QR/-X	TRANSISTOR		
Q4806 or	BC857BT-X	TRANSISTOR		
Q4951	DTC114EE-X	DIGI TRANSISTOR		
Q6101	QS6U24-W	MOS FET		
Q6102	2SA1577/QR/-X	TRANSISTOR		
Q6102 or	BC807-25W-X	TRANSISTOR		
Q6201	QS6U24-W	MOS FET		
Q6301	QS6U24-W	MOS FET		
Q6302	2SA1577/QR/-X	TRANSISTOR		

⚠ Symbol No.	Part No.	Part Name	Description	Local
Q6302	or BC807-25W-X	TRANSISTOR		
Q6303	2SC4617/QR/-X	TRANSISTOR		
Q6303	or BC847BT-X	TRANSISTOR		
Q6401	QS6U24-W	MOS FET		
Q6501	QS6U24-W	MOS FET		
Q6601	SSM3J14T-X	MOS FET		
Q6604	DTC144EE-X	DIGI TRANSISTOR		
Q6604	or BCR148T-X	DIGI TRANSISTOR		
Q6701	SSM3J14T-X	MOS FET		
Q6801	FML9-W	TRANSISTOR		
Q8002	2SA1774/QR/-X	TRANSISTOR	USB DET W	
Q8002	or BC857BT-X	TRANSISTOR		
D1001	DA221-X	DIODE ARRAY		
D1002	1SS376-X	SI DIODE		
D3001	EC2C01C-TR-X	VARI CAP DIODE		
D3002	EC2C01C-TR-X	VARI CAP DIODE		
D3003	EC2C01C-TR-X	VARI CAP DIODE		
D3004	BAT165-X	SB DIODE		
D5501	1SS355-X	SI DIODE		
D5502	1SS355-X	SI DIODE		
D6601	RB480Y-W	SB DIODE		
D6602	RB480Y-W	SB DIODE		
D6701	RB160M-30-X	SB DIODE		
D6702	RB160M-30-X	SB DIODE		
⚠ D6801	RB715F-X	SB DIODE		
⚠ D6801	or BAS40-05W-X	SB DIODE		
C1001	NDCA1HJ-4R0W	C CAPACITOR	4pF 50V J	
C1002	NDCA1HJ-5R0W	C CAPACITOR	5pF 50V J	
C1003	NCFA1AZ-104W	C CAPACITOR	0.1uF 10V Z	
C1004	NCFA1AZ-104W	C CAPACITOR	0.1uF 10V Z	
C1005	NCFA1AZ-104W	C CAPACITOR	0.1uF 10V Z	
C1006	NCFA1AZ-104W	C CAPACITOR	0.1uF 10V Z	
C1007	NCFA1AZ-104W	C CAPACITOR	0.1uF 10V Z	
C1008	NCFA1AZ-104W	C CAPACITOR	0.1uF 10V Z	
C1009	NCFA1AZ-104W	C CAPACITOR	0.1uF 10V Z	
C1010	NCFA1AZ-104W	C CAPACITOR	0.1uF 10V Z	
C1011	NCFA1AZ-104W	C CAPACITOR	0.1uF 10V Z	
C1012	NCFA1AZ-104W	C CAPACITOR	0.1uF 10V Z	
C1013	NCFA1AZ-104W	C CAPACITOR	0.1uF 10V Z	
C1014	NCFA1AZ-104W	C CAPACITOR	0.1uF 10V Z	
C1015	NCFA1AZ-104W	C CAPACITOR	0.1uF 10V Z	
C1016	NCFA1AZ-104W	C CAPACITOR	0.1uF 10V Z	
C1017	NBE20JM-226X	TA E CAPACITOR	22uF 6.3V M	
C1018	NCFA1AZ-104W	C CAPACITOR	0.1uF 10V Z	
C1019	NBE20JM-226X	TA E CAPACITOR	22uF 6.3V M	
C1020	NCFA1AZ-104W	C CAPACITOR	0.1uF 10V Z	
C1021	NCFA1AZ-104W	C CAPACITOR	0.1uF 10V Z	
C1022	NCBA1EK-682W	C CAPACITOR	6800pF 25V K	
C1023	NCBA1EK-682W	C CAPACITOR	6800pF 25V K	
C1024	NCFA1HZ-103W	C CAPACITOR	0.01uF 50V Z	
C1025	NCFA1AZ-104W	C CAPACITOR	0.1uF 10V Z	
C1026	NCFA1AZ-104W	C CAPACITOR	0.1uF 10V Z	
C1027	NCFA1AZ-104W	C CAPACITOR	0.1uF 10V Z	
C1028	NCFA1AZ-104W	C CAPACITOR	0.1uF 10V Z	
C1029	NCFA1AZ-104W	C CAPACITOR	0.1uF 10V Z	
C1030	NCFA1AZ-104W	C CAPACITOR	0.1uF 10V Z	
C1031	NCFA1AZ-104W	C CAPACITOR	0.1uF 10V Z	
C1032	NCFA1AZ-104W	C CAPACITOR	0.1uF 10V Z	
C1033	NCFA1AZ-104W	C CAPACITOR	0.1uF 10V Z	
C1034	NCFA1AZ-104W	C CAPACITOR	0.1uF 10V Z	
C1035	NCFA1AZ-104W	C CAPACITOR	0.1uF 10V Z	
C1036	NCFA1AZ-104W	C CAPACITOR	0.1uF 10V Z	
C1037	NCFA1HZ-103W	C CAPACITOR	0.01uF 50V Z	
C1038	NCFA1HZ-103W	C CAPACITOR	0.01uF 50V Z	
C1039	NCFA1HZ-103W	C CAPACITOR	0.01uF 50V Z	
C1040	NDCA1HJ-7R0W	C CAPACITOR	7pF 50V J	
C1041	NCFA1AZ-104W	C CAPACITOR	0.1uF 10V Z	
C1042	NCFA1AZ-104W	C CAPACITOR	0.1uF 10V Z	
C1043	NCFA1AZ-104W	C CAPACITOR	0.1uF 10V Z	
C1046	NCF31AZ-105X	C CAPACITOR	1uF 10V Z	
C1047	NCFA1HZ-103W	C CAPACITOR	0.01uF 50V Z	
C1048	NCFA1HZ-103W	C CAPACITOR	0.01uF 50V Z	
C1049	NCFA1HZ-103W	C CAPACITOR	0.01uF 50V Z	
C1050	NCFA1HZ-103W	C CAPACITOR	0.01uF 50V Z	
C1051	NCBA1CK-223W	C CAPACITOR	0.022uF 16V K	
C1052	NCBA1CK-223W	C CAPACITOR	0.022uF 16V K	

⚠ Symbol No.	Part No.	Part Name	Description	Local
C1053	NCBA1CK-223W	C CAPACITOR	0.022uF 16V K	
C1054	NCBA1CK-223W	C CAPACITOR	0.022uF 16V K	
C1102	NBE20JM-226X	TA E CAPACITOR	22uF 6.3V M	
C1103	NCBA1CK-223W	C CAPACITOR	0.022uF 16V K	
C1104	NCBA1CK-223W	C CAPACITOR	0.022uF 16V K	
C1105	NBE20JM-106X	TA E CAPACITOR	10uF 6.3V M	
C1106	NCFA1AZ-104W	C CAPACITOR	0.1uF 10V Z	
C1107	NCF31AZ-105X	C CAPACITOR	1uF 10V Z	
C2105	NCBA1HK-222W	C CAPACITOR	2200pF 50V K	
C2106	NCBA1HK-222W	C CAPACITOR	2200pF 50V K	
C2107	NBE20JM-106X	TA E CAPACITOR	10uF 6.3V M	
C2108	NCBA1AK-104W	C CAPACITOR	0.1uF 10V K	
C2109	NCBA1AK-104W	C CAPACITOR	0.1uF 10V K	
C2110	NBE20JM-475X	TA E CAPACITOR	4.7uF 6.3V M	
C2201	NCBA1AK-104W	C CAPACITOR	0.1uF 10V K	
C2202	NCB30JK-105X	C CAPACITOR	1uF 6.3V K	
C2203	NCB30JK-105X	C CAPACITOR	1uF 6.3V K	
C2204	NCB30JK-105X	C CAPACITOR	1uF 6.3V K	
C2205	NCB30JK-105X	C CAPACITOR	1uF 6.3V K	
C2209	NCB30JK-105X	C CAPACITOR	1uF 6.3V K	
C2210	NCB30JK-105X	C CAPACITOR	1uF 6.3V K	
C2211	NCBA1AK-104W	C CAPACITOR	0.1uF 10V K	
C2212	NCBA1AK-104W	C CAPACITOR	0.1uF 10V K	
C2213	NCBA1AK-104W	C CAPACITOR	0.1uF 10V K	
C2214	NCBA1AK-104W	C CAPACITOR	0.1uF 10V K	
C2215	NCBA1AK-104W	C CAPACITOR	0.1uF 10V K	
C2216	NCBA1AK-104W	C CAPACITOR	0.1uF 10V K	
C2217	NCBA1AK-104W	C CAPACITOR	0.1uF 10V K	
C2218	NCBA1AK-104W	C CAPACITOR	0.1uF 10V K	
C2223	NCBA1AK-104W	C CAPACITOR	0.1uF 10V K	
C2224	NCBA1AK-104W	C CAPACITOR	0.1uF 10V K	
C2401	NBE20JM-106X	TA E CAPACITOR	10uF 6.3V M	
C2402	NBE20JM-106X	TA E CAPACITOR	10uF 6.3V M	
C2403	NBE20JM-106X	TA E CAPACITOR	10uF 6.3V M	
C2404	NBE20JM-106X	TA E CAPACITOR	10uF 6.3V M	
C2405	NCBA1AK-104W	C CAPACITOR	0.1uF 10V K	
C2406	NBE20JM-106X	TA E CAPACITOR	10uF 6.3V M	
C2603	NCBA1CK-223W	C CAPACITOR	0.022uF 16V K	
C2604	NCBA1CK-223W	C CAPACITOR	0.022uF 16V K	
C2605	NCBA1EK-472W	C CAPACITOR	4700pF 25V K	
C2606	NCBA1EK-472W	C CAPACITOR	4700pF 25V K	
C2607	NCBA1HK-102W	C CAPACITOR	1000pF 50V K	
C2608	NCBA1HK-102W	C CAPACITOR	1000pF 50V K	
C2611	NCB31CK-104X	C CAPACITOR	0.1uF 16V K	
C2612	NCB31CK-104X	C CAPACITOR	0.1uF 16V K	
C2613	NCB30JK-105X	C CAPACITOR	1uF 6.3V K	
C2614	NDCA1HJ-101W	C CAPACITOR	100pF 50V J	
C2615	NDCA1HJ-101W	C CAPACITOR	100pF 50V J	
C3001	NBE20JM-106X	TA E CAPACITOR	10uF 6.3V M	
C3003	NCB30JK-105X	C CAPACITOR	1uF 6.3V K	
C3005	NBE20JM-106X	TA E CAPACITOR	10uF 6.3V M	
C3006	NCB30JK-105X	C CAPACITOR	1uF 6.3V K	
C3007	NBE20GM-476X	TA E CAPACITOR	47uF 4V M	
C3008	NBE20JM-106X	TA E CAPACITOR	10uF 6.3V M	
C3009	NCB30JK-105X	C CAPACITOR	1uF 6.3V K	
C3011	NCBA1AK-104W	C CAPACITOR	0.1uF 10V K	
C3012	NCBA1AK-104W	C CAPACITOR	0.1uF 10V K	
C3013	NCBA1CK-103W	C CAPACITOR	0.01uF 16V K	
C3015	NCBA1CK-103W	C CAPACITOR	0.01uF 16V K	
C3016	NCBA1AK-104W	C CAPACITOR	0.1uF 10V K	
C3017	NCBA1AK-104W	C CAPACITOR	0.1uF 10V K	
C3020	NCBA1AK-104W	C CAPACITOR	0.1uF 10V K	
C3021	NCBA1AK-104W	C CAPACITOR	0.1uF 10V K	
C3022	NCBA1AK-104W	C CAPACITOR	0.1uF 10V K	
C3023	NDCA1HJ-330W	C CAPACITOR	33pF 50V J	
C3024	NCBA1HK-102W	C CAPACITOR	1000pF 50V K	
C3025	NCBA1AK-104W	C CAPACITOR	0.1uF 10V K	
C3026	NCB30JK-105X	C CAPACITOR	1uF 6.3V K	
C3027	NCBA1EK-472W	C CAPACITOR	4700pF 25V K	
C3028	NDCA1EJ-271W	C CAPACITOR	270pF 25V J	
C3029	NCBA1CK-103W	C CAPACITOR	0.01uF 16V K	
C3030	NCBA1AK-104W	C CAPACITOR	0.1uF 10V K	
C3031	NCBA1AK-104W	C CAPACITOR	0.1uF 10V K	
C3032	NCBA1HK-102W	C CAPACITOR	1000pF 50V K	
C3033	NDCA1HJ-150W	C CAPACITOR	15pF 50V J	
C3036	NDCA1HJ-8R0W	C CAPACITOR	8pF 50V J	
C3037	NDCA1HJ-8R0W	C CAPACITOR	8pF 50V J	
C3038	NCBA1AK-104W	C CAPACITOR	0.1uF 10V K	

⚠ Symbol No.	Part No.	Part Name	Description	Local
C3039	NCBA1AK-104W	C CAPACITOR	0.1uF 10V K	
C3042	NCBA1CK-103W	C CAPACITOR	0.01uF 16V K	
C3043	NCBA1CK-103W	C CAPACITOR	0.01uF 16V K	
C3044	NCBA1AK-104W	C CAPACITOR	0.1uF 10V K	
C3045	NCBA1AK-104W	C CAPACITOR	0.1uF 10V K	
C3046	NCBA1CK-103W	C CAPACITOR	0.01uF 16V K	
C3047	NCBA1AK-104W	C CAPACITOR	0.1uF 10V K	
C3048	NCB31CK-473X	C CAPACITOR	0.047uF 16V K	
C3049	NCBA1HK-222W	C CAPACITOR	2200pF 50V K	
C3050	NCBA1CK-103W	C CAPACITOR	0.01uF 16V K	
C3055	NCBA1CK-103W	C CAPACITOR	0.01uF 16V K	
C3059	NBE20GM-226X	TA E CAPACITOR	22uF 4V M	
C3060	NCBA1CK-103W	C CAPACITOR	0.01uF 16V K	
C3064	NCBA1HK-102W	C CAPACITOR	1000pF 50V K	
C3066	NCB30JK-105X	C CAPACITOR	1uF 6.3V K	
C3067	NCBA1HK-102W	C CAPACITOR	1000pF 50V K	
C3069	NCBA1AK-104W	C CAPACITOR	0.1uF 10V K	
C3201	NBE20JM-106X	TA E CAPACITOR	10uF 6.3V M	
C3202	NCB21AK-105X	C CAPACITOR	1uF 10V K	
C3203	NCB21AK-105X	C CAPACITOR	1uF 10V K	
C3204	NBE20JM-106X	TA E CAPACITOR	10uF 6.3V M	
C3205	NBE20GM-476X	TA E CAPACITOR	47uF 4V M	
C3206	NCBA1CK-103W	C CAPACITOR	0.01uF 16V K	
C3207	NCBA1CK-103W	C CAPACITOR	0.01uF 16V K	
C3208	NCBA1CK-103W	C CAPACITOR	0.01uF 16V K	
C3209	NCBA1CK-103W	C CAPACITOR	0.01uF 16V K	
C3210	NCBA1CK-103W	C CAPACITOR	0.01uF 16V K	
C3211	NCBA1CK-103W	C CAPACITOR	0.01uF 16V K	
C3212	NCBA1CK-103W	C CAPACITOR	0.01uF 16V K	
C3213	NCBA1CK-103W	C CAPACITOR	0.01uF 16V K	
C3214	NCBA1CK-103W	C CAPACITOR	0.01uF 16V K	
C3215	NCBA1CK-103W	C CAPACITOR	0.01uF 16V K	
C3216	NCBA1AK-104W	C CAPACITOR	0.1uF 10V K	
C3217	NCB30JK-105X	C CAPACITOR	1uF 6.3V K	
C3218	NCBA1AK-104W	C CAPACITOR	0.1uF 10V K	
C3219	NCBA1AK-104W	C CAPACITOR	0.1uF 10V K	
C3220	NCBA1AK-104W	C CAPACITOR	0.1uF 10V K	
C3221	NCB30JK-105X	C CAPACITOR	1uF 6.3V K	
C3222	NCBA1AK-104W	C CAPACITOR	0.1uF 10V K	
C3223	NCBA1AK-104W	C CAPACITOR	0.1uF 10V K	
C3224	NCBA1AK-104W	C CAPACITOR	0.1uF 10V K	
C3225	NCBA1AK-104W	C CAPACITOR	0.1uF 10V K	
C3226	NCBA1AK-104W	C CAPACITOR	0.1uF 10V K	
C3227	NCBA1CK-103W	C CAPACITOR	0.01uF 16V K	
C3228	NCBA1CK-103W	C CAPACITOR	0.01uF 16V K	
C3229	NCBA1CK-103W	C CAPACITOR	0.01uF 16V K	
C3230	NCBA1CK-103W	C CAPACITOR	0.01uF 16V K	
C3231	NCBA1CK-103W	C CAPACITOR	0.01uF 16V K	
C3232	NCBA1CK-103W	C CAPACITOR	0.01uF 16V K	
C3233	NCBA1CK-103W	C CAPACITOR	0.01uF 16V K	
C3234	NCBA1CK-103W	C CAPACITOR	0.01uF 16V K	
C3235	NCBA1CK-103W	C CAPACITOR	0.01uF 16V K	
C3236	NCBA1CK-103W	C CAPACITOR	0.01uF 16V K	
C3237	NCBA1CK-103W	C CAPACITOR	0.01uF 16V K	
C3240	NDCA1HJ-101W	C CAPACITOR	100pF 50V J	
C3701	NBE20JM-106X	TA E CAPACITOR	10uF 6.3V M	
C3702	NDCA1HJ-560W	C CAPACITOR	56pF 50V J	
C3703	NDCA1HJ-270W	C CAPACITOR	27pF 50V J	
C3704	NDCA1HJ-680W	C CAPACITOR	68pF 50V J	
C3705	NDCA1HJ-270W	C CAPACITOR	27pF 50V J	
C3706	NCB30JK-105X	C CAPACITOR	1uF 6.3V K	
C3707	NCBA1CK-103W	C CAPACITOR	0.01uF 16V K	
C3708	NCBA1AK-104W	C CAPACITOR	0.1uF 10V K	
C3709	NCBA1CK-103W	C CAPACITOR	0.01uF 16V K	
C3712	NEAF0GM-337X	E CAPACITOR	330uF 4V M	
C3713	NEAF0GM-337X	E CAPACITOR	330uF 4V M	
C3715	NCBA1CK-103W	C CAPACITOR	0.01uF 16V K	
C3731	NCBA1CK-103W	C CAPACITOR	0.01uF 16V K	
C3732	NCBA1HK-102W	C CAPACITOR	1000pF 50V K	
C3733	NDCA1HJ-3R0W	C CAPACITOR	3pF 50V J	
C3734	NDCA1HJ-5R0W	C CAPACITOR	5pF 50V J	
C3735	NDCA1HJ-330W	C CAPACITOR	33pF 50V J	
C3736	NCBA1HK-102W	C CAPACITOR	1000pF 50V K	
C3738	NCBA1CK-103W	C CAPACITOR	0.01uF 16V K	
C3739	NCBA1CK-103W	C CAPACITOR	0.01uF 16V K	
C3740	NCB30JK-105X	C CAPACITOR	1uF 6.3V K	
C3741	NCB30JK-105X	C CAPACITOR	1uF 6.3V K	
C3742	NCBA1AK-104W	C CAPACITOR	0.1uF 10V K	

⚠ Symbol No.	Part No.	Part Name	Description	Local
C3743	NDCA1HJ-3R0W	C CAPACITOR	3pF 50V J	
C3744	NDCA1HJ-5R0W	C CAPACITOR	5pF 50V J	
C3745	NDCA1HJ-330W	C CAPACITOR	33pF 50V J	
C3746	NCB20JM-475X	C CAPACITOR	4.7uF 6.3V M	
C3747	NCBA1CK-103W	C CAPACITOR	0.01uF 16V K	
C4201	NCB30JK-105X	C CAPACITOR	1uF 6.3V K	
C4203	NCBA1AK-104W	C CAPACITOR	0.1uF 10V K	
C4204	NBE20JM-106X	TA E CAPACITOR	10uF 6.3V M	
C4206	NCBA1AK-104W	C CAPACITOR	0.1uF 10V K	
C4207	NCBA1AK-104W	C CAPACITOR	0.1uF 10V K	
C4208	NCBA1CK-123W	C CAPACITOR	0.012uF 16V K	
C4209	NCBA1AK-104W	C CAPACITOR	0.1uF 10V K	
C4210	NCB30JK-105X	C CAPACITOR	1uF 6.3V K	
C4211	NCB21CK-105X	C CAPACITOR	1uF 16V K	
C4213	NCBA1AK-104W	C CAPACITOR	0.1uF 10V K	
C4214	NCBA1AK-104W	C CAPACITOR	0.1uF 10V K	
C4215	NCBA1AK-104W	C CAPACITOR	0.1uF 10V K	
C4219	NCBA1AK-104W	C CAPACITOR	0.1uF 10V K	
C4220	NCB30JK-105X	C CAPACITOR	1uF 6.3V K	
C4221	NCB30JK-105X	C CAPACITOR	1uF 6.3V K	
C4222	NCB30JK-105X	C CAPACITOR	1uF 6.3V K	
C4301	NCB30JK-105X	C CAPACITOR	1uF 6.3V K	
C4302	NBE20JM-106X	TA E CAPACITOR	10uF 6.3V M	
C4304	NCBA1CK-103W	C CAPACITOR	0.01uF 16V K	
C4305	NCBA1AK-104W	C CAPACITOR	0.1uF 10V K	
C4306	NBE20JM-106X	TA E CAPACITOR	10uF 6.3V M	
C4307	NCBA1AK-104W	C CAPACITOR	0.1uF 10V K	
C4308	NBE20JM-106X	TA E CAPACITOR	10uF 6.3V M	
C4309	NCBA1AK-104W	C CAPACITOR	0.1uF 10V K	
C4310	NCBA1AK-104W	C CAPACITOR	0.1uF 10V K	
C4311	NCBA1AK-104W	C CAPACITOR	0.1uF 10V K	
C4312	NCBA1AK-104W	C CAPACITOR	0.1uF 10V K	
C4803	NBE21AM-106X	TA E CAPACITOR	10uF 10V M	
C4804	NCFA1AZ-104W	C CAPACITOR	0.1uF 10V Z	
C4806	NCFA1AZ-104W	C CAPACITOR	0.1uF 10V Z	
C4808	NCB30JK-105X	C CAPACITOR	1uF 6.3V K	
C4809	NCFA1AZ-104W	C CAPACITOR	0.1uF 10V Z	
C4810	NCBA1CK-103W	C CAPACITOR	0.01uF 16V K	
C4813	NCFA1AZ-104W	C CAPACITOR	0.1uF 10V Z	
C4814	NCFA1AZ-104W	C CAPACITOR	0.1uF 10V Z	
C4815	NCB31HK-152X	C CAPACITOR	1500pF 50V K	
C4816	NCFA1AZ-104W	C CAPACITOR	0.1uF 10V Z	
C4951	NCFA1AZ-104W	C CAPACITOR	0.1uF 10V Z	
C4952	NBE21AM-106X	TA E CAPACITOR	10uF 10V M	
C4953	NCFA1AZ-104W	C CAPACITOR	0.1uF 10V Z	
C4954	NBE21AM-106X	TA E CAPACITOR	10uF 10V M	
C4955	NCFA1AZ-104W	C CAPACITOR	0.1uF 10V Z	
C4956	NBE20JM-106X	TA E CAPACITOR	10uF 6.3V M	
C4957	NDCA1HJ-220W	C CAPACITOR	22pF 50V J	
C4958	NDCA1HJ-220W	C CAPACITOR	22pF 50V J	
C5501	NCBA1AK-104W	C CAPACITOR	0.1uF 10V K	
C5503	NCBA1AK-104W	C CAPACITOR	0.1uF 10V K	
C5504	NBP21VM-105X	TA E CAPACITOR	1uF 35V M	
C5506	NCBA1AK-104W	C CAPACITOR	0.1uF 10V K	
C5507	NCB30JK-105X	C CAPACITOR	1uF 6.3V K	
C5508	NCBA1AK-104W	C CAPACITOR	0.1uF 10V K	
C5509	NCBA1AK-104W	C CAPACITOR	0.1uF 10V K	
C5510	NCBA1AK-104W	C CAPACITOR	0.1uF 10V K	
C5511	NCBA1AK-104W	C CAPACITOR	0.1uF 10V K	
C5512	NCBA1AK-104W	C CAPACITOR	0.1uF 10V K	
C5513	NCBA1AK-104W	C CAPACITOR	0.1uF 10V K	
C5514	NBE40GM-476X	TA E CAPACITOR	47uF 4V M	
C5515	NCBA1AK-104W	C CAPACITOR	0.1uF 10V K	
C5516	NCJA0JK-105W-A	C CAPACITOR		
C5517	NCBA1AK-104W	C CAPACITOR	0.1uF 10V K	
C5519	NBE20JM-106X	TA E CAPACITOR	10uF 6.3V M	
C5520	NCBA1AK-104W	C CAPACITOR	0.1uF 10V K	
C5521	NCB30JK-105X	C CAPACITOR	1uF 6.3V K	
C5522	NCBA1AK-104W	C CAPACITOR	0.1uF 10V K	
C5523	NCBA1AK-104W	C CAPACITOR	0.1uF 10V K	
C5524	NBP41EM-475X-B	TA E CAPACITOR	4.7uF 25V M	
C5525	NCBA1AK-104W	C CAPACITOR	0.1uF 10V K	
C5526	NCBA1AK-104W	C CAPACITOR	0.1uF 10V K	
C5527	NBP41CM-226X	TA E CAPACITOR	22uF 16V M	
C5528	NCBA1AK-104W	C CAPACITOR	0.1uF 10V K	
C6002	NCB21CK-105X	C CAPACITOR	1uF 16V K	
C6003	NBP41EM-475X-B	TA E CAPACITOR	4.7uF 25V M	
C6004	NCB21CK-105X	C CAPACITOR	1uF 16V K	

⚠ Symbol No.	Part No.	Part Name	Description	Local
C6021	NCB21CK-104X	C CAPACITOR	0.1uF 16V K	
C6022	NCB21CK-104X	C CAPACITOR	0.1uF 16V K	
C6023	NCB21CK-105X	C CAPACITOR	1uF 16V K	
C6024	NCB21CK-105X	C CAPACITOR	1uF 16V K	
C6025	NCB21CK-105X	C CAPACITOR	1uF 16V K	
C6026	NCB21CK-105X	C CAPACITOR	1uF 16V K	
C6027	NCBA1EK-472W	C CAPACITOR	4700pF 25V K	
C6029	NCBA1HK-102W	C CAPACITOR	1000pF 50V K	
C6030	NCBA1HK-102W	C CAPACITOR	1000pF 50V K	
C6031	NCBA1EK-472W	C CAPACITOR	4700pF 25V K	
C6032	NCBA1HK-102W	C CAPACITOR	1000pF 50V K	
C6033	NCBA1CK-103W	C CAPACITOR	0.01uF 16V K	
C6034	NCB31CK-104X	C CAPACITOR	0.1uF 16V K	
C6035	NCB31CK-104X	C CAPACITOR	0.1uF 16V K	
C6036	NDCA1HJ-101W	C CAPACITOR	100pF 50V J	
C6037	NCB21CK-473X	C CAPACITOR	0.047uF 16V K	
C6038	NCBA1CK-103W	C CAPACITOR	0.01uF 16V K	
C6039	NCB21CK-224X	C CAPACITOR	0.22uF 16V K	
C6040	NCB31CK-473X	C CAPACITOR	0.047uF 16V K	
C6041	NCB31CK-473X	C CAPACITOR	0.047uF 16V K	
C6042	NCB31CK-473X	C CAPACITOR	0.047uF 16V K	
C6043	NCB31CK-683X	C CAPACITOR	0.068uF 16V K	
C6044	NCBA1CK-103W	C CAPACITOR	0.01uF 16V K	
C6045	NCB21CK-105X	C CAPACITOR	1uF 16V K	
C6101	NCB21CK-105X	C CAPACITOR	1uF 16V K	
C6103	NCB10JK-106X	C CAPACITOR	10uF 6.3V K	
C6104	NCBA1HK-102W	C CAPACITOR	1000pF 50V K	
C6105	NCBA1HK-561W	C CAPACITOR	560pF 50V K	
C6106	NCB21CK-105X	C CAPACITOR	1uF 16V K	
C6201	NCB21CK-105X	C CAPACITOR	1uF 16V K	
C6203	NCB10JK-106X	C CAPACITOR	10uF 6.3V K	
C6204	NCBA1HK-102W	C CAPACITOR	1000pF 50V K	
C6301	NCB21CK-105X	C CAPACITOR	1uF 16V K	
C6303	NCB10JK-106X	C CAPACITOR	10uF 6.3V K	
C6304	NCBA1HK-102W	C CAPACITOR	1000pF 50V K	
C6401	NCB21CK-105X	C CAPACITOR	1uF 16V K	
C6403	NCB21CK-105X	C CAPACITOR	1uF 16V K	
C6405	NCB31CK-683X	C CAPACITOR	0.068uF 16V K	
C6501	NCB21CK-105X	C CAPACITOR	1uF 16V K	
C6503	NCB21CK-105X	C CAPACITOR	1uF 16V K	
C6505	NCB21CK-105X	C CAPACITOR	1uF 16V K	
C6601	NCB21CK-105X	C CAPACITOR	1uF 16V K	
C6602	NCB21CK-105X	C CAPACITOR	1uF 16V K	
C6603	NCB11EK-105X	C CAPACITOR	1uF 25V K	
C6605	NCB21CK-105X	C CAPACITOR	1uF 16V K	
C6606	NCB21CK-105X	C CAPACITOR	1uF 16V K	
C6607	NCB11EK-105X	C CAPACITOR	1uF 25V K	
C6608	NCB21AK-105X	C CAPACITOR	1uF 10V K	
C6701	NCB21CK-105X	C CAPACITOR	1uF 16V K	
C6703	NCB21CK-105X	C CAPACITOR	1uF 16V K	
C6801	NCB21CK-105X	C CAPACITOR	1uF 16V K	
C6802	NBE40JM-476X	TA E CAPACITOR	47uF 6.3V M	
C6804	NCB21CK-105X	C CAPACITOR	1uF 16V K	
C6807	NCB10JK-106X	C CAPACITOR	10uF 6.3V K	
C6809	NDCA1HJ-151W	C CAPACITOR	150pF 50V J	
C8001	NBE20JM-106X	TA E CAPACITOR	10uF 6.3V M	
C8002	NBE20JM-106X	TA E CAPACITOR	10uF 6.3V M	
C8003	NBE20JM-106X	TA E CAPACITOR	10uF 6.3V M	
C8004	NCBA1AK-104W	C CAPACITOR	0.1uF 10V K	
C8005	NCBA1AK-104W	C CAPACITOR	0.1uF 10V K	
C8006	NBE20JM-106X	TA E CAPACITOR	10uF 6.3V M	
C8007	NCBA1AK-104W	C CAPACITOR	0.1uF 10V K	
C8008	NCBA1AK-104W	C CAPACITOR	0.1uF 10V K	
C8010	NCBA1AK-104W	C CAPACITOR	0.1uF 10V K	
C8011	NCBA1AK-104W	C CAPACITOR	0.1uF 10V K	
C8014	NCBA1AK-104W	C CAPACITOR	0.1uF 10V K	
C8015	NCBA1AK-104W	C CAPACITOR	0.1uF 10V K	
C8016	NCBA1AK-104W	C CAPACITOR	0.1uF 10V K	
C8017	NCBA1AK-104W	C CAPACITOR	0.1uF 10V K	
C8018	NCBA1AK-104W	C CAPACITOR	0.1uF 10V K	
C8019	NCBA1AK-104W	C CAPACITOR	0.1uF 10V K	
C8020	NCBA1AK-104W	C CAPACITOR	0.1uF 10V K	
C8021	NBE20JM-106X	TA E CAPACITOR	10uF 6.3V M	
C8022	NCBA1AK-104W	C CAPACITOR	0.1uF 10V K	
C8023	NCBA1AK-104W	C CAPACITOR	0.1uF 10V K	
C8025	NCBA1AK-104W	C CAPACITOR	0.1uF 10V K	
C8026	NCBA1AK-104W	C CAPACITOR	0.1uF 10V K	
C8030	NCBA1CK-103W	C CAPACITOR	0.01uF 16V K	

⚠ Symbol No.	Part No.	Part Name	Description	Local
C8031	NCBA1AK-104W	C CAPACITOR	0.1uF 10V K	
C8301	NBE20JM-106X	TA E CAPACITOR	10uF 6.3V M	
C8305	NCBA1AK-104W	C CAPACITOR	0.1uF 10V K	
C8306	NCBA1AK-104W	C CAPACITOR	0.1uF 10V K	
C8307	NCBA1AK-104W	C CAPACITOR	0.1uF 10V K	
C8310	NCBA1AK-104W	C CAPACITOR	0.1uF 10V K	
C8311	NCBA1AK-104W	C CAPACITOR	0.1uF 10V K	
R1001	NRSA6AJ-105W	MG RESISTOR	1MΩ 1/16W J	
R1005	NRSA6AJ-0R0W	MG RESISTOR	0Ω 1/16W J	
R1006	NRSA6AJ-473W	MG RESISTOR	47kΩ 1/16W J	
R1007	NRSA6AJ-0R0W	MG RESISTOR	0Ω 1/16W J	
R1008	NRSA6AJ-0R0W	MG RESISTOR	0Ω 1/16W J	
R1009	NRSA6AJ-104W	MG RESISTOR	100kΩ 1/16W J	
R1010	NRSA6AJ-104W	MG RESISTOR	100kΩ 1/16W J	
R1011	NRSA6AJ-104W	MG RESISTOR	100kΩ 1/16W J	
R1012	NRSA6AJ-103W	MG RESISTOR	10kΩ 1/16W J	
R1013	NRSA6AJ-103W	MG RESISTOR	10kΩ 1/16W J	
R1014	NRSA6AJ-103W	MG RESISTOR	10kΩ 1/16W J	
R1015	NRSA6AJ-104W	MG RESISTOR	100kΩ 1/16W J	
R1016	NRSA6AJ-104W	MG RESISTOR	100kΩ 1/16W J	
R1017	NRSA6AJ-104W	MG RESISTOR	100kΩ 1/16W J	
R1018	NRSA6AJ-104W	MG RESISTOR	100kΩ 1/16W J	
R1019	NRSA6AJ-104W	MG RESISTOR	100kΩ 1/16W J	
R1020	NRSA6AJ-104W	MG RESISTOR	100kΩ 1/16W J	
R1021	NRSA6AJ-104W	MG RESISTOR	100kΩ 1/16W J	
R1022	NRSA6AJ-104W	MG RESISTOR	100kΩ 1/16W J	
R1023	NRSA6AJ-104W	MG RESISTOR	100kΩ 1/16W J	
R1024	NRSA6AJ-104W	MG RESISTOR	100kΩ 1/16W J	
R1025	NRSA6AJ-104W	MG RESISTOR	100kΩ 1/16W J	
R1026	NRSA6AJ-472W	MG RESISTOR	4.7kΩ 1/16W J	
R1027	NRSA6AJ-104W	MG RESISTOR	100kΩ 1/16W J	
R1029	NRSA6AJ-104W	MG RESISTOR	100kΩ 1/16W J	
R1030	NRSA6AJ-753W	MG RESISTOR	75kΩ 1/16W J	
R1031	NRSA6AJ-334W	MG RESISTOR	330kΩ 1/16W J	
R1032	NRSA6AJ-332W	MG RESISTOR	3.3kΩ 1/16W J	
R1033	NRSA6AJ-332W	MG RESISTOR	3.3kΩ 1/16W J	
R1034	NRSA6AJ-332W	MG RESISTOR	3.3kΩ 1/16W J	
R1035	NRSA6AJ-473W	MG RESISTOR	47kΩ 1/16W J	
R1036	NRSA6AJ-473W	MG RESISTOR	47kΩ 1/16W J	
R1037	NRSA6AJ-561W	MG RESISTOR	560Ω 1/16W J	
R1038	NRSA6AJ-104W	MG RESISTOR	100kΩ 1/16W J	
R1040	NRSA6AJ-104W	MG RESISTOR	100kΩ 1/16W J	
R1041	NRSA6AJ-473W	MG RESISTOR	47kΩ 1/16W J	
R1042	NRSA6AJ-473W	MG RESISTOR	47kΩ 1/16W J	
R1043	NRSA6AJ-102W	MG RESISTOR	1kΩ 1/16W J	
R1044	NRSA6AJ-104W	MG RESISTOR	100kΩ 1/16W J	
R1045	NRSA6AJ-105W	MG RESISTOR	1MΩ 1/16W J	
R1046	NRSA6AJ-104W	MG RESISTOR	100kΩ 1/16W J	
R1047	NRSA6AJ-104W	MG RESISTOR	100kΩ 1/16W J	
R1048	NRSA6AJ-103W	MG RESISTOR	10kΩ 1/16W J	
R1049	NRSA6AJ-623W	MG RESISTOR	62kΩ 1/16W J	
R1050	NRSA6AJ-823W	MG RESISTOR	82kΩ 1/16W J	
R1051	NRSA6AJ-473W	MG RESISTOR	47kΩ 1/16W J	
R1052	NRSA6AJ-104W	MG RESISTOR	100kΩ 1/16W J	
R1053	NRSA6AJ-222W	MG RESISTOR	2.2kΩ 1/16W J	
R1054	NRSA6AJ-104W	MG RESISTOR	100kΩ 1/16W J	
R1055	NRSA6AJ-152W	MG RESISTOR	1.5kΩ 1/16W J	
R1059	NRSA6AJ-0R0W	MG RESISTOR	0Ω 1/16W J	
R1061	NRSA6AJ-104W	MG RESISTOR	100kΩ 1/16W J	
R1062	NRSA6AJ-224W	MG RESISTOR	220kΩ 1/16W J	
R1063	NRSA6AJ-472W	MG RESISTOR	4.7kΩ 1/16W J	
R1064	NRSA6AJ-103W	MG RESISTOR	10kΩ 1/16W J	
R1065	NRSA6AJ-153W	MG RESISTOR	15kΩ 1/16W J	
R1066	NRSA6AJ-103W	MG RESISTOR	10kΩ 1/16W J	
R1067	NRSA6AJ-334W	MG RESISTOR	330kΩ 1/16W J	
R1068	NRSA6AJ-104W	MG RESISTOR	100kΩ 1/16W J	
R1069	NRSA6AJ-104W	MG RESISTOR	100kΩ 1/16W J	
R1070	NRSA6AJ-154W	MG RESISTOR	150kΩ 1/16W J	
R1071	NRSA6AJ-272W	MG RESISTOR	2.7kΩ 1/16W J	
R1072	NRSA6AJ-183W	MG RESISTOR	18kΩ 1/16W J	
R1073	NRSA6AJ-103W	MG RESISTOR	10kΩ 1/16W J	
R1074	NRSA6AJ-472W	MG RESISTOR	4.7kΩ 1/16W J	
R1075	NRSA6AJ-473W	MG RESISTOR	47kΩ 1/16W J	
R1076	NRSA6AJ-473W	MG RESISTOR	47kΩ 1/16W J	
R1077	NRSA6AJ-104W	MG RESISTOR	100kΩ 1/16W J	
R1078	NRSA6AJ-393W	MG RESISTOR	39kΩ 1/16W J	
R1079	NRSA6AJ-223W	MG RESISTOR	22kΩ 1/16W J	

⚠ Symbol No.	Part No.	Part Name	Description	Local
R1080	NRSA6AJ-822W	MG RESISTOR	8.2kΩ 1/16W J	
R1081	NRSA6AJ-103W	MG RESISTOR	10kΩ 1/16W J	
R1082	NRSA6AJ-123W	MG RESISTOR	12kΩ 1/16W J	
R1083	NRSA6AJ-223W	MG RESISTOR	22kΩ 1/16W J	
R1084	NRSA6AJ-102W	MG RESISTOR	1kΩ 1/16W J	
R1085	NRSA6AJ-102W	MG RESISTOR	1kΩ 1/16W J	
R1086	NRSA6AJ-332W	MG RESISTOR	3.3kΩ 1/16W J	
R1087	NRSA6AJ-332W	MG RESISTOR	3.3kΩ 1/16W J	
R1088	NRSA6AJ-332W	MG RESISTOR	3.3kΩ 1/16W J	
R1089	NRSA6AJ-332W	MG RESISTOR	3.3kΩ 1/16W J	
R1090	NRSA6AJ-223W	MG RESISTOR	22kΩ 1/16W J	
R1091	NRSA6AJ-103W	MG RESISTOR	10kΩ 1/16W J	
R1092	NRSA6AJ-103W	MG RESISTOR	10kΩ 1/16W J	
R1093	NRSA6AJ-103W	MG RESISTOR	10kΩ 1/16W J	
R1094	NRSA6AJ-103W	MG RESISTOR	10kΩ 1/16W J	
R1097	NRSA6AJ-104W	MG RESISTOR	100kΩ 1/16W J	
R1098	NRSA6AJ-0R0W	MG RESISTOR	0Ω 1/16W J	
R1099	NRSA6AJ-104W	MG RESISTOR	100kΩ 1/16W J	
R1101	NRSA6AJ-105W	MG RESISTOR	1MΩ 1/16W J	
R1102	NRSA6AJ-472W	MG RESISTOR	4.7kΩ 1/16W J	
R1103	NRSA6AJ-333W	MG RESISTOR	33kΩ 1/16W J	
R1104	NRSA6AJ-105W	MG RESISTOR	1MΩ 1/16W J	
R1105	NRSA6AJ-472W	MG RESISTOR	4.7kΩ 1/16W J	
R1106	NRSA6AJ-103W	MG RESISTOR	10kΩ 1/16W J	
R1107	NRSA6AJ-103W	MG RESISTOR	10kΩ 1/16W J	
R1108	NRSA6AJ-302W	MG RESISTOR	3kΩ 1/16W J	
R1109	NRSA6AJ-223W	MG RESISTOR	22kΩ 1/16W J	
R1110	NRSA6AJ-223W	MG RESISTOR	22kΩ 1/16W J	
R1111	NRSA6AJ-223W	MG RESISTOR	22kΩ 1/16W J	
R1112	NRSA6AJ-223W	MG RESISTOR	22kΩ 1/16W J	
R1113	NRSA6AJ-223W	MG RESISTOR	22kΩ 1/16W J	
R1114	NRSA6AJ-101W	MG RESISTOR	100Ω 1/16W J	
R1115	NRSA6AJ-473W	MG RESISTOR	47kΩ 1/16W J	
R1116	NRSA6AJ-104W	MG RESISTOR	100kΩ 1/16W J	
R1117	NRSA6AJ-102W	MG RESISTOR	1kΩ 1/16W J	
R1118	NRSA6AJ-102W	MG RESISTOR	1kΩ 1/16W J	
R1119	NRSA6AJ-102W	MG RESISTOR	1kΩ 1/16W J	
R1120	NRSA6AJ-102W	MG RESISTOR	1kΩ 1/16W J	
R1121	NRSA6AJ-102W	MG RESISTOR	1kΩ 1/16W J	
R1122	NRSA6AJ-102W	MG RESISTOR	1kΩ 1/16W J	
R1123	NRSA6AJ-102W	MG RESISTOR	1kΩ 1/16W J	
R1124	NRSA6AJ-102W	MG RESISTOR	1kΩ 1/16W J	
R1125	NRSA6AJ-102W	MG RESISTOR	1kΩ 1/16W J	
R1126	NRSA6AJ-102W	MG RESISTOR	1kΩ 1/16W J	
R1127	NRSA6AJ-102W	MG RESISTOR	1kΩ 1/16W J	
R1128	NRSA6AJ-102W	MG RESISTOR	1kΩ 1/16W J	
R1129	NRSA6AJ-102W	MG RESISTOR	1kΩ 1/16W J	
R1130	NRSA6AJ-102W	MG RESISTOR	1kΩ 1/16W J	
R1131	NRSA6AJ-102W	MG RESISTOR	1kΩ 1/16W J	
R1132	NRSA6AJ-102W	MG RESISTOR	1kΩ 1/16W J	
R1133	NRSA6AJ-102W	MG RESISTOR	1kΩ 1/16W J	
R1134	NRSA6AJ-102W	MG RESISTOR	1kΩ 1/16W J	
R1135	NRSA6AJ-102W	MG RESISTOR	1kΩ 1/16W J	
R1136	NRSA6AJ-102W	MG RESISTOR	1kΩ 1/16W J	
R1137	NRSA6AJ-102W	MG RESISTOR	1kΩ 1/16W J	
R1138	NRSA6AJ-223W	MG RESISTOR	22kΩ 1/16W J	
R1140	NRSA6AJ-0R0W	MG RESISTOR	0Ω 1/16W J	
R1151	NRSA6AJ-470W	MG RESISTOR	47Ω 1/16W J	
R2013	NRSA6AJ-0R0W	MG RESISTOR	0Ω 1/16W J	
R2014	NRSA6AJ-0R0W	MG RESISTOR	0Ω 1/16W J	
R2015	NRSA6AJ-0R0W	MG RESISTOR	0Ω 1/16W J	
R2016	NRSA6AJ-0R0W	MG RESISTOR	0Ω 1/16W J	
R2017	NRSA6AJ-0R0W	MG RESISTOR	0Ω 1/16W J	
R2018	NRSA6AJ-0R0W	MG RESISTOR	0Ω 1/16W J	
R2101	NRSA6AJ-471W	MG RESISTOR	470Ω 1/16W J	
R2102	NRSA6AJ-471W	MG RESISTOR	470Ω 1/16W J	
R2105	NRSA6AJ-0R0W	MG RESISTOR	0Ω 1/16W J	
R2111	NRSA6AJ-0R0W	MG RESISTOR	0Ω 1/16W J	
R2112	NRSA6AJ-0R0W	MG RESISTOR	0Ω 1/16W J	
R2113	NRSA6AJ-0R0W	MG RESISTOR	0Ω 1/16W J	
R2114	NRSA6AJ-0R0W	MG RESISTOR	0Ω 1/16W J	
R2201	NRSA6AJ-684W	MG RESISTOR	680kΩ 1/16W J	
R2202	NRSA6AJ-564W	MG RESISTOR	560kΩ 1/16W J	
R2203	NRSA6AJ-393W	MG RESISTOR	39kΩ 1/16W J	
R2204	NRSA6AJ-154W	MG RESISTOR	150kΩ 1/16W J	
R2206	NRSA6AJ-333W	MG RESISTOR	33kΩ 1/16W J	
R2207	NRSA6AJ-333W	MG RESISTOR	33kΩ 1/16W J	
R2208	NRSA6AJ-223W	MG RESISTOR	22kΩ 1/16W J	

⚠ Symbol No.	Part No.	Part Name	Description	Local
R2209	NRSA6AJ-223W	MG RESISTOR	22kΩ 1/16W J	
R2210	NRSA6AJ-0R0W	MG RESISTOR	0Ω 1/16W J	
R2211	NRSA6AJ-0R0W	MG RESISTOR	0Ω 1/16W J	
R2212	NRSA6AJ-2R7W	MG RESISTOR	2.7Ω 1/16W J	
R2213	NRSA6AJ-2R7W	MG RESISTOR	2.7Ω 1/16W J	
R2217	NRSA6AJ-100W	MG RESISTOR	10Ω 1/16W J	
R2218	NRSA6AJ-100W	MG RESISTOR	10Ω 1/16W J	
R2219	NRSA6AJ-0R0W	MG RESISTOR	0Ω 1/16W J	
R2220	NRSA6AJ-0R0W	MG RESISTOR	0Ω 1/16W J	
R2221	NRSA6AJ-0R0W	MG RESISTOR	0Ω 1/16W J	
R2222	NRSA6AJ-100W	MG RESISTOR	10Ω 1/16W J	
R2223	NRSA6AJ-100W	MG RESISTOR	10Ω 1/16W J	
R2224	NRSA6AJ-100W	MG RESISTOR	10Ω 1/16W J	
R2225	NRSA6AJ-0R0W	MG RESISTOR	0Ω 1/16W J	
R2226	NRSA6AJ-0R0W	MG RESISTOR	0Ω 1/16W J	
R2229	NRSA6AJ-564W	MG RESISTOR	560kΩ 1/16W J	
R2230	NRSA6AJ-564W	MG RESISTOR	560kΩ 1/16W J	
R2231	NRSA6AJ-332W	MG RESISTOR	3.3kΩ 1/16W J	
R2401	NRSA6AJ-472W	MG RESISTOR	4.7kΩ 1/16W J	
R2402	NRSA6AJ-472W	MG RESISTOR	4.7kΩ 1/16W J	
R2403	NRSA6AJ-183W	MG RESISTOR	18kΩ 1/16W J	
R2407	NRSA6AJ-100W	MG RESISTOR	10Ω 1/16W J	
R2601	NRSA6AJ-182W	MG RESISTOR	1.8kΩ 1/16W J	
R2602	NRSA6AJ-182W	MG RESISTOR	1.8kΩ 1/16W J	
R2607	NRSA6AJ-223W	MG RESISTOR	22kΩ 1/16W J	
R2608	NRSA6AJ-223W	MG RESISTOR	22kΩ 1/16W J	
R2609	NRSA6AJ-224W	MG RESISTOR	220kΩ 1/16W J	
R2610	NRSA6AJ-224W	MG RESISTOR	220kΩ 1/16W J	
R3002	NRSA6AJ-103W	MG RESISTOR	10kΩ 1/16W J	
R3004	NRSA6AJ-103W	MG RESISTOR	10kΩ 1/16W J	
R3005	NRSA6AJ-100W	MG RESISTOR	10Ω 1/16W J	
R3006	NRSA6AJ-100W	MG RESISTOR	10Ω 1/16W J	
R3007	NRSA6AJ-562W	MG RESISTOR	5.6kΩ 1/16W J	
R3008	NRSA6AJ-222W	MG RESISTOR	2.2kΩ 1/16W J	
R3009	NRSA6AJ-103W	MG RESISTOR	10kΩ 1/16W J	
R3010	NRSA6AJ-103W	MG RESISTOR	10kΩ 1/16W J	
R3011	NRSA6AJ-224W	MG RESISTOR	220kΩ 1/16W J	
R3013	NRSA6AJ-242W	MG RESISTOR	2.4kΩ 1/16W J	
R3014	NRSA6AJ-392W	MG RESISTOR	3.9kΩ 1/16W J	
R3015	NRSA6AJ-392W	MG RESISTOR	3.9kΩ 1/16W J	
R3016	NRVA6AD-560W	CMF RESISTOR	56Ω 1/16W D	
R3017	NRVA6AD-560W	CMF RESISTOR	56Ω 1/16W D	
R3018	NRVA6AD-560W	CMF RESISTOR	56Ω 1/16W D	
R3019	NRVA6AD-560W	CMF RESISTOR	56Ω 1/16W D	
R3020	NRVA6AD-512W	CMF RESISTOR	5.1kΩ 1/16W D	
R3021	NRSA6AJ-0R0W	MG RESISTOR	0Ω 1/16W J	
R3025	NRSA6AJ-102W	MG RESISTOR	1kΩ 1/16W J	
R3027	NRSA6AJ-103W	MG RESISTOR	10kΩ 1/16W J	
R3029	NRSA6AJ-822W	MG RESISTOR	8.2kΩ 1/16W J	
R3030	NRSA6AJ-224W	MG RESISTOR	220kΩ 1/16W J	
R3031	NRSA6AJ-224W	MG RESISTOR	220kΩ 1/16W J	
R3032	NRSA6AJ-105W	MG RESISTOR	1MΩ 1/16W J	
R3034	NRSA6AJ-222W	MG RESISTOR	2.2kΩ 1/16W J	
R3036	NRSA6AJ-103W	MG RESISTOR	10kΩ 1/16W J	
R3037	NRSA6AJ-681W	MG RESISTOR	680Ω 1/16W J	
R3057	NRSA6AJ-151W	MG RESISTOR	150Ω 1/16W J	
R3066	NRSA6AJ-561W	MG RESISTOR	560Ω 1/16W J	
R3067	NRSA6AJ-561W	MG RESISTOR	560Ω 1/16W J	
R3068	NRSA6AJ-181W	MG RESISTOR	180Ω 1/16W J	
R3069	NRSA6AJ-472W	MG RESISTOR	4.7kΩ 1/16W J	
R3071	NRSA6AJ-0R0W	MG RESISTOR	0Ω 1/16W J	
R3074	NRSA6AJ-103W	MG RESISTOR	10kΩ 1/16W J	
R3077	NRSA6AJ-0R0W	MG RESISTOR	0Ω 1/16W J	
R3201	NRSA6AJ-101W	MG RESISTOR	100Ω 1/16W J	
R3202	NRSA6AD-183W	MG RESISTOR	18kΩ 1/16W D	
R3203	NRSA6AD-123W	MG RESISTOR	12kΩ 1/16W D	
R3204	NRSA6AD-821W	MG RESISTOR	820Ω 1/16W D	
R3205	NRSA6AD-821W	MG RESISTOR	820Ω 1/16W D	
R3207	NRSA6AJ-0R0W	MG RESISTOR	0Ω 1/16W J	
R3212	NRSA6AJ-151W	MG RESISTOR	150Ω 1/16W J	
R3213	NRSA6AJ-101W	MG RESISTOR	100Ω 1/16W J	
R3214	NRSA6AJ-101W	MG RESISTOR	100Ω 1/16W J	
R3339	NRSA63J-0R0X	MG RESISTOR	0Ω 1/16W J	
R3701	NRSA6AD-271W	MG RESISTOR	270Ω 1/16W D	
R3702	NRSA6AD-271W	MG RESISTOR	270Ω 1/16W D	
R3703	NRSA6AJ-332W	MG RESISTOR	3.3kΩ 1/16W J	
R3704	NRSA6AD-301W	MG RESISTOR	300Ω 1/16W D	
R3705	NRSA6AD-301W	MG RESISTOR	300Ω 1/16W D	

⚠ Symbol No.	Part No.	Part Name	Description	Local
R3706	NRSA6AJ-332W	MG RESISTOR	3.3kΩ 1/16W J	
R3707	NRSA6AD-680W	MG RESISTOR	68Ω 1/16W D	
R3708	NRSA6AD-680W	MG RESISTOR	68Ω 1/16W D	
R3709	NRSA6AD-680W	MG RESISTOR	68Ω 1/16W D	
R3710	NRSA6AJ-104W	MG RESISTOR	100kΩ 1/16W J	
R3712	NRSA6AJ-105W	MG RESISTOR	1MΩ 1/16W J	
R3713	NRSA6AJ-104W	MG RESISTOR	100kΩ 1/16W J	
R3714	NRSA6AJ-823W	MG RESISTOR	82kΩ 1/16W J	
R3715	NRSA6AJ-103W	MG RESISTOR	10kΩ 1/16W J	
R3722	NRSA6AD-131W	MG RESISTOR	130Ω 1/16W D	
R3724	NRSA6AJ-472W	MG RESISTOR	4.7kΩ 1/16W J	
R3725	NRSA6AD-131W	MG RESISTOR	130Ω 1/16W D	
R3726	NRSA6AJ-472W	MG RESISTOR	4.7kΩ 1/16W J	
R3727	NRSA6AJ-472W	MG RESISTOR	4.7kΩ 1/16W J	
R3728	NRSA6AD-131W	MG RESISTOR	130Ω 1/16W D	
R3730	NRSA6AJ-472W	MG RESISTOR	4.7kΩ 1/16W J	
R3731	NRSA6AJ-472W	MG RESISTOR	4.7kΩ 1/16W J	
R3732	NRSA6AJ-101W	MG RESISTOR	100Ω 1/16W J	
R3733	NRSA6AD-561W	MG RESISTOR	560Ω 1/16W D	
R3734	NRSA6AJ-822W	MG RESISTOR	8.2kΩ 1/16W J	
R3735	NRSA6AD-182W	MG RESISTOR	1.8kΩ 1/16W D	
R3736	NRSA6AJ-183W	MG RESISTOR	18kΩ 1/16W J	
R3737	NRSA6AJ-183W	MG RESISTOR	18kΩ 1/16W J	
R3738	NRSA6AJ-681W	MG RESISTOR	680Ω 1/16W J	
R3739	NRSA6AJ-821W	MG RESISTOR	820Ω 1/16W J	
R3740	NRSA6AJ-821W	MG RESISTOR	820Ω 1/16W J	
R3741	NRSA6AJ-102W	MG RESISTOR	1kΩ 1/16W J	
R3742	NRSA6AJ-104W	MG RESISTOR	100kΩ 1/16W J	
R3743	NRSA6AJ-104W	MG RESISTOR	100kΩ 1/16W J	
R3744	NRSA6AD-561W	MG RESISTOR	560Ω 1/16W D	
R3745	NRSA6AD-152W	MG RESISTOR	1.5kΩ 1/16W D	
R3746	NRSA6AJ-222W	MG RESISTOR	2.2kΩ 1/16W J	
R3747	NRSA6AJ-102W	MG RESISTOR	1kΩ 1/16W J	
R3748	NRSA6AJ-474W	MG RESISTOR	470kΩ 1/16W J	
R4201	NRSA6AJ-0R0W	MG RESISTOR	0Ω 1/16W J	
R4202	NRSA6AJ-510W	MG RESISTOR	51Ω 1/16W J	
R4203	NRSA6AJ-333W	MG RESISTOR	33kΩ 1/16W J	
R4301	NRSA6AJ-0R0W	MG RESISTOR	0Ω 1/16W J	
R4303	NRSA6AJ-0R0W	MG RESISTOR	0Ω 1/16W J	
R4304	NRSA6AJ-0R0W	MG RESISTOR	0Ω 1/16W J	
R4305	NRSA6AJ-0R0W	MG RESISTOR	0Ω 1/16W J	
R4306	NRSA6AJ-0R0W	MG RESISTOR	0Ω 1/16W J	
R4307	NRSA6AJ-0R0W	MG RESISTOR	0Ω 1/16W J	
R4308	NRSA6AJ-0R0W	MG RESISTOR	0Ω 1/16W J	
R4310	NRSA6AJ-0R0W	MG RESISTOR	0Ω 1/16W J	
R4311	NRSA6AJ-0R0W	MG RESISTOR	0Ω 1/16W J	
R4312	NRSA6AJ-0R0W	MG RESISTOR	0Ω 1/16W J	
R4313	NRSA6AJ-0R0W	MG RESISTOR	0Ω 1/16W J	
R4314	NRSA6AJ-102W	MG RESISTOR	1kΩ 1/16W J	
R4315	NRSA6AJ-100W	MG RESISTOR	10Ω 1/16W J	
R4320	NRSA6AJ-0R0W	MG RESISTOR	0Ω 1/16W J	
R4321	NRSA6AJ-0R0W	MG RESISTOR	0Ω 1/16W J	
R4322	NRSA6AJ-0R0W	MG RESISTOR	0Ω 1/16W J	
R4323	NRSA6AJ-0R0W	MG RESISTOR	0Ω 1/16W J	
R4324	NRSA6AJ-0R0W	MG RESISTOR	0Ω 1/16W J	
R4325	NRSA6AJ-0R0W	MG RESISTOR	0Ω 1/16W J	
R4326	NRSA6AJ-0R0W	MG RESISTOR	0Ω 1/16W J	
R4327	NRSA6AJ-0R0W	MG RESISTOR	0Ω 1/16W J	
R4328	NRSA6AJ-0R0W	MG RESISTOR	0Ω 1/16W J	
R4805	NRSA6AJ-103W	MG RESISTOR	10kΩ 1/16W J	
R4806	NRSA6AJ-683W	MG RESISTOR	68kΩ 1/16W J	
R4807	NRSA6AJ-683W	MG RESISTOR	68kΩ 1/16W J	
R4808	NRSA6AJ-243W	MG RESISTOR	24kΩ 1/16W J	
R4809	NRSA6AJ-331W	MG RESISTOR	330Ω 1/16W J	
R4810	NRSA6AJ-103W	MG RESISTOR	10kΩ 1/16W J	
R4811	NRSA6AJ-564W	MG RESISTOR	560kΩ 1/16W J	
R4812	NRSA6AJ-153W	MG RESISTOR	15kΩ 1/16W J	
R4814	NRSA6AJ-105W	MG RESISTOR	1MΩ 1/16W J	
R4815	NRSA6AJ-472W	MG RESISTOR	4.7kΩ 1/16W J	
R4816	NRSA6AJ-105W	MG RESISTOR	1MΩ 1/16W J	
R4817	NRSA6AJ-472W	MG RESISTOR	4.7kΩ 1/16W J	
R4818	NRSA6AJ-103W	MG RESISTOR	10kΩ 1/16W J	
R4819	NRSA6AJ-103W	MG RESISTOR	10kΩ 1/16W J	
R4820	NRSA6AJ-104W	MG RESISTOR	100kΩ 1/16W J	
R4821	NRSA6AJ-104W	MG RESISTOR	100kΩ 1/16W J	
R4822	NRSA6AJ-683W	MG RESISTOR	68kΩ 1/16W J	
R4823	NRSA6AJ-102W	MG RESISTOR	1kΩ 1/16W J	
R4824	NRSA6AJ-472W	MG RESISTOR	4.7kΩ 1/16W J	

⚠ Symbol No.	Part No.	Part Name	Description	Local
R4825	NRSA6AJ-222W	MG RESISTOR	2.2kΩ 1/16W J	
R4826	NRSA6AJ-473W	MG RESISTOR	47kΩ 1/16W J	
R4830	NRSA6AJ-222W	MG RESISTOR	2.2kΩ 1/16W J	
R4831	NRSA6AJ-473W	MG RESISTOR	47kΩ 1/16W J	
R4833	NRSA6AJ-333W	MG RESISTOR	33kΩ 1/16W J	
R4834	NRSA6AJ-104W	MG RESISTOR	100kΩ 1/16W J	
R4841	NRSA6AJ-103W	MG RESISTOR	10kΩ 1/16W J	
R4842	NRSA6AJ-103W	MG RESISTOR	10kΩ 1/16W J	
R4951	NRSA6AJ-102W	MG RESISTOR	1kΩ 1/16W J	
R4952	NRSA6AJ-102W	MG RESISTOR	1kΩ 1/16W J	
R4953	NRSA6AJ-102W	MG RESISTOR	1kΩ 1/16W J	
R4954	NRSA6AJ-102W	MG RESISTOR	1kΩ 1/16W J	
R4955	NRSA6AJ-101W	MG RESISTOR	100Ω 1/16W J	
R4956	NRSA6AJ-4R7W	MG RESISTOR	4.7Ω 1/16W J	
R4957	NRSA6AJ-4R7W	MG RESISTOR	4.7Ω 1/16W J	
R4958	NRSA6AJ-0R0W	MG RESISTOR	0Ω 1/16W J	
R4959	NRSA6AJ-4R7W	MG RESISTOR	4.7Ω 1/16W J	
R4960	NRSA6AJ-4R7W	MG RESISTOR	4.7Ω 1/16W J	
R4961	NRSA6AJ-271W	MG RESISTOR	270Ω 1/16W J	
R4962	NRSA6AJ-0R0W	MG RESISTOR	0Ω 1/16W J	
R4963	NRSA6AJ-0R0W	MG RESISTOR	0Ω 1/16W J	
R4964	NRSA6AJ-0R0W	MG RESISTOR	0Ω 1/16W J	
R4965	NRSA6AJ-0R0W	MG RESISTOR	0Ω 1/16W J	
R5501	NRSA6AJ-104W	MG RESISTOR	100kΩ 1/16W J	
R5502	NRSA6AJ-100W	MG RESISTOR	10Ω 1/16W J	
R5503	NRSA6AJ-100W	MG RESISTOR	10Ω 1/16W J	
R5504	NRSA6AJ-100W	MG RESISTOR	10Ω 1/16W J	
R5505	NRSA6AJ-100W	MG RESISTOR	10Ω 1/16W J	
R5506	NRSA6AJ-100W	MG RESISTOR	10Ω 1/16W J	
R5507	NRSA6AJ-100W	MG RESISTOR	10Ω 1/16W J	
R5508	NRSA6AJ-100W	MG RESISTOR	10Ω 1/16W J	
R5509	NRSA6AJ-101W	MG RESISTOR	100Ω 1/16W J	
R6021	NRSA6AJ-102W	MG RESISTOR	1kΩ 1/16W J	
R6022	NRSA6AJ-102W	MG RESISTOR	1kΩ 1/16W J	
R6023	NRSA6AJ-102W	MG RESISTOR	1kΩ 1/16W J	
R6024	NRSA6AJ-102W	MG RESISTOR	1kΩ 1/16W J	
R6027	NRSA6AD-103W	MG RESISTOR	10kΩ 1/16W D	
R6028	NRSA6AD-751W	MG RESISTOR	750Ω 1/16W D	
R6029	NRSA6AD-103W	MG RESISTOR	10kΩ 1/16W D	
R6030	NRSA6AJ-333W	MG RESISTOR	33kΩ 1/16W J	
R6031	NRSA6AJ-472W	MG RESISTOR	4.7kΩ 1/16W J	
R6033	NRSA6AJ-562W	MG RESISTOR	5.6kΩ 1/16W J	
R6034	NRSA6AJ-153W	MG RESISTOR	15kΩ 1/16W J	
R6035	NRSA6AJ-104W	MG RESISTOR	100kΩ 1/16W J	
R6036	NRSA6AJ-104W	MG RESISTOR	100kΩ 1/16W J	
R6037	NRSA6AD-153W	MG RESISTOR	15kΩ 1/16W D	
R6038	NRSA6AJ-0R0W	MG RESISTOR	0Ω 1/16W J	
R6039	NRSA6AJ-104W	MG RESISTOR	100kΩ 1/16W J	
R6040	NRSA6AJ-103W	MG RESISTOR	10kΩ 1/16W J	
R6042	NRSA63J-0R0X	MG RESISTOR	0Ω 1/16W J	
R6044	NRSA6AJ-224W	MG RESISTOR	220kΩ 1/16W J	
R6045	NRSA6AJ-0R0W	MG RESISTOR	0Ω 1/16W J	
R6046	NRSA6AJ-123W	MG RESISTOR	12kΩ 1/16W J	
R6047	NRSA6AJ-0R0W	MG RESISTOR	0Ω 1/16W J	
R6048	NRSA02J-0R0X	MG RESISTOR	0Ω 1/10W J	
R6049	NRSA02J-0R0X	MG RESISTOR	0Ω 1/10W J	
R6102	NRVA6AD-223W	CMF RESISTOR	22kΩ 1/16W D	
R6103	NRVA6AD-103W	CMF RESISTOR	10kΩ 1/16W D	
R6104	NRSA6AJ-474W	MG RESISTOR	470kΩ 1/16W J	
R6105	NRSA6AJ-473W	MG RESISTOR	47kΩ 1/16W J	
R6106	NRSA6AJ-101W	MG RESISTOR	100Ω 1/16W J	
R6107	NRSA6AD-183W	MG RESISTOR	18kΩ 1/16W D	
R6108	NRSA6AD-123W	MG RESISTOR	12kΩ 1/16W D	
R6109	NRSA63J-0R0X	MG RESISTOR	0Ω 1/16W J	
R6110	NRSA6AJ-0R0W	MG RESISTOR	0Ω 1/16W J	
R6202	NRSA6AD-123W	MG RESISTOR	12kΩ 1/16W D	
R6203	NRSA6AD-153W	MG RESISTOR	15kΩ 1/16W D	
R6204	NRSA6AJ-122W	MG RESISTOR	1.2kΩ 1/16W J	
R6302	NRSA6AD-183W	MG RESISTOR	18kΩ 1/16W D	
R6303	NRSA6AD-472W	MG RESISTOR	4.7kΩ 1/16W D	
R6305	NRSA6AJ-104W	MG RESISTOR	100kΩ 1/16W J	
R6306	NRSA6AJ-123W	MG RESISTOR	12kΩ 1/16W J	
R6308	NRSA6AJ-473W	MG RESISTOR	47kΩ 1/16W J	
R6309	NRSA63J-0R0X	MG RESISTOR	0Ω 1/16W J	
R6310	NRSA6AJ-0R0W	MG RESISTOR	0Ω 1/16W J	
R6402	NRSA6AD-243W	MG RESISTOR	24kΩ 1/16W D	
R6403	NRSA6AD-302W	MG RESISTOR	3kΩ 1/16W D	
R6405	NRSA6AJ-123W	MG RESISTOR	12kΩ 1/16W J	

⚠ Symbol No.	Part No.	Part Name	Description	Local
R6406	NRSA6AJ-103W	MG RESISTOR	10kΩ 1/16W J	
R6407	NRSA6AJ-104W	MG RESISTOR	100kΩ 1/16W J	
R6502	NRSA6AD-473W	MG RESISTOR	47kΩ 1/16W D	
R6503	NRSA6AD-562W	MG RESISTOR	5.6kΩ 1/16W D	
R6505	NRSA6AJ-473W	MG RESISTOR	47kΩ 1/16W J	
R6506	NRSA6AJ-273W	MG RESISTOR	27kΩ 1/16W J	
R6602	NRSA6AD-114W	MG RESISTOR	110kΩ 1/16W D	
R6603	NRSA6AD-392W	MG RESISTOR	3.9kΩ 1/16W D	
R6604	NRSA6AD-114W	MG RESISTOR	110kΩ 1/16W D	
R6605	NRSA6AJ-222W	MG RESISTOR	2.2kΩ 1/16W J	
R6606	NRSA6AD-623W	MG RESISTOR	62kΩ 1/16W D	
R6607	NRSA6AD-822W	MG RESISTOR	8.2kΩ 1/16W D	
R6609	NRSA6AD-753W	MG RESISTOR	75kΩ 1/16W D	
R6610	NRSA6AD-153W	MG RESISTOR	15kΩ 1/16W D	
R6612	NRSA6AJ-104W	MG RESISTOR	100kΩ 1/16W J	
R6613	NRSA6AJ-823W	MG RESISTOR	82kΩ 1/16W J	
R6614	NRSA6AJ-0R0W	MG RESISTOR	0Ω 1/16W J	
R6615	NRSA6AJ-4R7W	MG RESISTOR	4.7Ω 1/16W J	
R6616	NRSA63J-0R0X	MG RESISTOR	0Ω 1/16W J	
R6702	NRSA6AD-114W	MG RESISTOR	110kΩ 1/16W D	
R6703	NRSA6AD-153W	MG RESISTOR	15kΩ 1/16W D	
R6704	NRSA6AJ-224W	MG RESISTOR	220kΩ 1/16W J	
R6706	NRSA6AD-823W	MG RESISTOR	82kΩ 1/16W D	
R6707	NRSA6AD-333W	MG RESISTOR	33kΩ 1/16W D	
R6709	NRSA63J-0R0X	MG RESISTOR	0Ω 1/16W J	
R6710	NRV142F-R20X	CMF RESISTOR	0.2Ω 1/4W F	
R6803	NRSA6AJ-0R0W	MG RESISTOR	0Ω 1/16W J	
R6804	NRVA6AD-563W	CMF RESISTOR	56kΩ 1/16W D	
⚠ R6805	NRSA6AJ-102W	MG RESISTOR	1kΩ 1/16W J	
R6813	NRVA6AD-273W	CMF RESISTOR	27kΩ 1/16W D	
R6815	NRSA6AJ-681W	MG RESISTOR	680Ω 1/16W J	
R8001	NRSA6AJ-103W	MG RESISTOR	10kΩ 1/16W J	
R8002	NRSA6AJ-103W	MG RESISTOR	10kΩ 1/16W J	
R8003	NRSA6AJ-103W	MG RESISTOR	10kΩ 1/16W J	
R8004	NRSA02J-0R0X	MG RESISTOR	0Ω 1/10W J	
R8005	NRSA6AJ-104W	MG RESISTOR	100kΩ 1/16W J	
R8006	NRSA6AJ-153W	MG RESISTOR	15kΩ 1/16W J	
R8007	NRSA6AJ-472W	MG RESISTOR	4.7kΩ 1/16W J	
R8009	NRSA6AJ-472W	MG RESISTOR	4.7kΩ 1/16W J	
R8016	NRSA6AJ-103W	MG RESISTOR	10kΩ 1/16W J	
R8017	NRSA6AJ-103W	MG RESISTOR	10kΩ 1/16W J	
R8022	NRSA6AJ-105W	MG RESISTOR	1MΩ 1/16W J	
R8030	NRSA6AJ-0R0W	MG RESISTOR	0Ω 1/16W J	
R8031	NRSA6AJ-0R0W	MG RESISTOR	0Ω 1/16W J	
R8032	NRSA6AJ-0R0W	MG RESISTOR	0Ω 1/16W J	
R8033	NRSA6AJ-0R0W	MG RESISTOR	0Ω 1/16W J	
R8037	NRSA6AJ-103W	MG RESISTOR	10kΩ 1/16W J	
R8038	NRSA6AJ-220W	MG RESISTOR	22Ω 1/16W J	
R8041	NRSA6AJ-0R0W	MG RESISTOR	0Ω 1/16W J	
R8042	NRSA6AJ-0R0W	MG RESISTOR	0Ω 1/16W J	
R8043	NRSA6AJ-220W	MG RESISTOR	22Ω 1/16W J	
R8046	NRSA6AJ-0R0W	MG RESISTOR	0Ω 1/16W J	
R8051	NRSA6AJ-0R0W	MG RESISTOR	0Ω 1/16W J	
R8054	NRSA6AJ-0R0W	MG RESISTOR	0Ω 1/16W J	
R8056	NRSA6AJ-0R0W	MG RESISTOR	0Ω 1/16W J	
R8063	NRSA6AJ-220W	MG RESISTOR	22Ω 1/16W J	
R8065	NRSA6AJ-0R0W	MG RESISTOR	0Ω 1/16W J	
R8066	NRSA6AJ-103W	MG RESISTOR	10kΩ 1/16W J	
R8068	NRSA6AJ-561W	MG RESISTOR	560Ω 1/16W J	
R8069	NRSA6AJ-0R0W	MG RESISTOR	0Ω 1/16W J	
R8070	NRSA6AJ-220W	MG RESISTOR	22Ω 1/16W J	
R8074	NRSA6AJ-473W	MG RESISTOR	47kΩ 1/16W J	
R8075	NRSA6AJ-102W	MG RESISTOR	1kΩ 1/16W J	
R8076	NRSA6AJ-220W	MG RESISTOR	22Ω 1/16W J	
R8077	NRSA6AJ-220W	MG RESISTOR	22Ω 1/16W J	
R8078	NRSA6AJ-220W	MG RESISTOR	22Ω 1/16W J	
R8079	NRSA6AJ-221W	MG RESISTOR	220Ω 1/16W J	
R8080	NRSA6AJ-154W	MG RESISTOR	150kΩ 1/16W J	
R8302	NRS181J-220X	MG RESISTOR	22Ω 1/8W J	
R8303	NRS181J-220X	MG RESISTOR	22Ω 1/8W J	
R8306	NRSA6AJ-103W	MG RESISTOR	10kΩ 1/16W J	
R8307	NRSA6AJ-103W	MG RESISTOR	10kΩ 1/16W J	
R8308	NRSA6AJ-103W	MG RESISTOR	10kΩ 1/16W J	
R8309	NRSA6AJ-103W	MG RESISTOR	10kΩ 1/16W J	
R8313	NRSA6AJ-0R0W	MG RESISTOR	0Ω 1/16W J	
R8314	NRSA6AJ-105W	MG RESISTOR	1MΩ 1/16W J	
R8315	NRSA6AJ-105W	MG RESISTOR	1MΩ 1/16W J	
R8716	NRSA6AJ-0R0W	MG RESISTOR	0Ω 1/16W J	

⚠ Symbol No.	Part No.	Part Name	Description	Local
R8717	NRSA6AJ-0R0W	MG RESISTOR	0Ω 1/16W J	
RA3001	NRZ0034-560W	NET RESISTOR	56Ω 1/32W J	
RA3002	NRZ0034-560W	NET RESISTOR	56Ω 1/32W J	
RA3003	NRZ0034-100W	NET RESISTOR	10Ω 1/32W J	
RA3004	NRZ0034-103W	NET RESISTOR	10kΩ 1/32W J	
RA3005	NRZ0040-0R0X	NET RESISTOR	0Ω 1/16W J	
RA3201	NRZ0034-101W	NET RESISTOR	100Ω 1/32W J	
RA3202	NRZ0034-101W	NET RESISTOR	100Ω 1/32W J	
RA4301	NRZ0034-0R0W	NET RESISTOR	0Ω 1/32W J	
RA4302	NRZ0034-0R0W	NET RESISTOR	0Ω 1/32W J	
RA4303	NRZ0034-0R0W	NET RESISTOR	0Ω 1/32W J	
RA4304	NRZ0034-0R0W	NET RESISTOR	0Ω 1/32W J	
RA8001	NRZ0034-101W	NET RESISTOR	100Ω 1/32W J	
RA8002	NRZ0034-101W	NET RESISTOR	100Ω 1/32W J	
RA8003	NRZ0034-101W	NET RESISTOR	100Ω 1/32W J	
RA8004	NRZ0034-101W	NET RESISTOR	100Ω 1/32W J	
L1001	NQL402M-100X	COIL	10uH M	
L1002	NQL402M-100X	COIL	10uH M	
L2101	NQL38DK-100X	P COIL	10uH K	
L2401	NQL402M-100X	COIL	10uH M	
L2402	NQL402M-100X	COIL	10uH M	
L3001	NQR0129-002X	FERRITE BEADS		
L3002	NQR0129-002X	FERRITE BEADS		
L3004	NQR0006-001X	FERRITE BEADS		
L3005	NQR0006-001X	FERRITE BEADS		
L3007	NQL085J-2R2X	COIL	2.2uH J	
L3008	NQL085J-120X	COIL	12uH J	
L3012	NQR0129-002X	FERRITE BEADS		
L3014	NQL38DK-100X	P COIL	10uH K	
L3015	NQR0006-001X	FERRITE BEADS		
L3201	NQR0129-002X	FERRITE BEADS		
L3202	NQR0129-002X	FERRITE BEADS		
L3203	NQR0006-001X	FERRITE BEADS		
L3204	NQL38DK-100X	P COIL	10uH K	
L3701	NQL38DK-100X	P COIL	10uH K	
L3731	NQL085J-6R8X	COIL	6.8uH J	
L3732	NQL085J-6R8X	COIL	6.8uH J	
L4201	NQR0129-002X	FERRITE BEADS		
L4301	NQR0129-002X	FERRITE BEADS		
L4303	NQR0129-002X	FERRITE BEADS		
L4304	NQR0129-002X	FERRITE BEADS		
L4305	NQR0129-002X	FERRITE BEADS		
L4802	NQL38DK-100X	P COIL	10uH K	
L4953	NQR0129-002X	FERRITE BEADS		
L4954	NQL38DK-100X	P COIL	10uH K	
L4955	NQL38DK-100X	P COIL	10uH K	
L5501	NQR0129-002X	FERRITE BEADS		
L5502	NQL315K-100X	COIL	10uH K	
L5503	NQR0129-002X	FERRITE BEADS		
L5504	NQL315K-100X	COIL	10uH K	
L5505	NQR0129-002X	FERRITE BEADS		
L6101	NQL52EM-390X	COIL	39uH M	
L6201	NQL82EN-390X	COIL	39uH N	
L6301	NQL52EM-390X	COIL	39uH M	
L6302	NQL144K-220X	P COIL	22uH K	
L6401	NQL52EM-470X	COIL	47uH M	
L6501	NQL52EM-470X	COIL	47uH M	
L6601	NQLZ011-221X	COIL	220uH M	
L6701	NQL73EM-100X	COIL	10uH M	
L6801	NQL79GM-470X	COIL	47uH M	
L8001	NQR0129-002X	FERRITE BEADS		
L8002	NQR0129-002X	FERRITE BEADS		
L8003	NQR0129-002X	FERRITE BEADS		
L8004	NQR0129-002X	FERRITE BEADS		
L8005	NQR0129-002X	FERRITE BEADS		
L8006	NQR0129-002X	FERRITE BEADS		
L8301	NQR0129-002X	FERRITE BEADS		
CN101	QGF0528F1-40X	CONNECTOR	MONITOR L FFC/FPC (1-40)	
CN102	QGF0508F1-06X	CONNECTOR	FRONT FFC/FPC (1-6)	
CN103	QGF0534F1-10X	CONNECTOR	SD CARD L FFC/FPC (1-10)	
CN104	QGA1002C1-08X	CONNECTOR	REAR W W-B (1-8)	
CN105	QGB0801M1-30X	CONNECTOR	JIG CN B B-B (1-30)	
CN106	QGA1001F1-04X	CONNECTOR	MIC W W-B (1-4)	
CN107	QGF0512C1-20X	CONNECTOR	CCD S FFC/FPC (1-20)	
CN108	QGF0512C1-24X	CONNECTOR	OP S FFC/FPC (1-24)	
CN109	QGF0534F1-16X	CONNECTOR	OPE UNITL FFC/FPC (1-16)	

⚠ Symbol No.	Part No.	Part Name	Description	Local
CN110	QGF0508F1-40X	CONNECTOR	PRE/MDA L FFC/FPC (1-40)	
CN111	QGF0508F1-40X	CONNECTOR	PRE/MDA L FFC/FPC (1-40)	
CN112	QGF0512C1-12X	CONNECTOR	REAR FFC/FPC (1-12)	
⚠ F4951	NMFZ007-R20X-K	FUSE	0.2A 50V	
⚠ F4952	NMFZ007-R20X-K	FUSE	0.2A 50V	
⚠ F6001	NMFZ007-2R5X-K	FUSE	2.5A 24V	
⚠ F6301	NMFZ007-1R25X-K	FUSE	1.25A 32V	
⚠ F6801	NMFZ007-R50X-K	FUSE	0.5A 50V	
J501	NNZ0041-001X	D CONNECTOR	DV IEEE1394(4pin)	
J502	QNZ0616-001	USB CONNECTOR	USB	
X1001	NAX0630-001	CRYSTAL		
X1002	NAX0564-001X	CRYSTAL		
X3002	NAX0480-001X	CRYSTAL	24.576MHz	
X4301	NAX0587-001X	CXO		
X8301	NAX0612-001X	C RESONATOR		
OT1	LY30030-0Y7A	SPACER(A)	SPACER	
OT2	LY30030-0Y3A	SPACER(A)		
OT3	LY44549-001A	SHIELD SHEET	REG	
WR1	WJT0122-001A	E-CARD WIRE	MAN-PRE/MD(x2)	
WR2	WJM0370-001A	E-SI C WIRE C-F	JP_WIRE	

MONI-C BOARD ASSEMBLY <02>

⚠ Symbol No.	Part No.	Part Name	Description	Local
PW1	YB10453A-01	MONI-C BOARD ASSY		
IC7601	AN2540FHQ	IC		
IC7602	RC4558D-X	IC		
IC7604	SN74LV08APW-X	IC		
IC7606	MM1613AN-X	IC		
Q7601	2SC4617/QR/-X	TRANSISTOR		
Q7601	or 2SC4738/YG/-X	TRANSISTOR		
Q7601	or 2SD2216J/QR/-X	TRANSISTOR		
Q7601	or BC847BT-X	TRANSISTOR		
Q7602	2SA1774/QR/-X	TRANSISTOR		
Q7602	or 2SA1832/YG/-X	TRANSISTOR		
Q7602	or BC857BT-X	TRANSISTOR		
Q7602	or 2SB1462J/QR/-X	TRANSISTOR		
Q7603	2SC4617/QR/-X	TRANSISTOR		
Q7603	or 2SC4738/YG/-X	TRANSISTOR		
Q7603	or 2SD2216J/QR/-X	TRANSISTOR		
Q7603	or BC847BT-X	TRANSISTOR		
Q7604	2SA1774/QR/-X	TRANSISTOR		
Q7604	or 2SA1832/YG/-X	TRANSISTOR		
Q7604	or BC857BT-X	TRANSISTOR		
Q7604	or 2SB1462J/QR/-X	TRANSISTOR		
Q7605	DTC144EE-X	DIGI TRANSISTOR	KOPIN	
Q7605	or UN9213J-X	DIGI TRANSISTOR	KOPIN	
Q7605	or RN1104-X	DIGI TRANSISTOR	KOPIN	
Q7605	or BCR148T-X	DIGI TRANSISTOR	KOPIN	
Q7608	DTC144EE-X	DIGI TRANSISTOR		
Q7608	or UN9213J-X	DIGI TRANSISTOR		
Q7608	or RN1104-X	DIGI TRANSISTOR		
Q7608	or BCR148T-X	DIGI TRANSISTOR		
Q7609	DTC144EE-X	DIGI TRANSISTOR		
Q7609	or UN9213J-X	DIGI TRANSISTOR		
Q7609	or RN1104-X	DIGI TRANSISTOR		
Q7609	or BCR148T-X	DIGI TRANSISTOR		
Q7610	DTA144EE-X	DIGI TRANSISTOR		
Q7610	or UN9113J-X	DIGI TRANSISTOR		
Q7610	or RN2104-X	DIGI TRANSISTOR		
Q7610	or BCR198T-X	DIGI TRANSISTOR		
D7602	BAS16-03W-X	SI DIODE		
D7604	MA8068-X	Z DIODE		
C1	NCB31EK-103X	C CAPACITOR	0.01uF 25V K	
C10	NCB31CK-104X	C CAPACITOR	0.1uF 16V K	
C11	NBE20JM-106X	TA E CAPACITOR	10uF 6.3V M	
C7601	NCB21CK-105X	C CAPACITOR	1uF 16V K	
C7603	NCB21AK-225X	C CAPACITOR	2.2uF 10V K	
C7604	NCB21AK-225X	C CAPACITOR	2.2uF 10V K	
C7605	NCB21AK-225X	C CAPACITOR	2.2uF 10V K	
C7606	NCB31CK-104X	C CAPACITOR	0.1uF 16V K	

⚠ Symbol No.	Part No.	Part Name	Description	Local
C7607	NCB41CK-106X	C CAPACITOR	10uF 16V K	
C7609	NCB31CK-104X	C CAPACITOR	0.1uF 16V K	
C7610	NCB21AK-225X	C CAPACITOR	2.2uF 10V K	
C7611	NCB21AK-225X	C CAPACITOR	2.2uF 10V K	
C7612	NCB21AK-225X	C CAPACITOR	2.2uF 10V K	
C7613	NCB21AK-225X	C CAPACITOR	2.2uF 10V K	
C7614	NCB31HK-152X	C CAPACITOR	1500pF 50V K	
C7616	NCB31EK-103X	C CAPACITOR	0.01uF 25V K	
C7618	NBE90JM-106X	TA E CAPACITOR	10uF 6.3V M	
C7619	NBE90JM-106X	TA E CAPACITOR	10uF 6.3V M	
C7621	NCB21CK-105X	C CAPACITOR	1uF 16V K	
C7622	NCB21CK-105X	C CAPACITOR	1uF 16V K	
C7623	NBE21AM-106X	TA E CAPACITOR	10uF 10V M	
C7624	NCB31EK-103X	C CAPACITOR	0.01uF 25V K	
C7625	NCF31CZ-104X	C CAPACITOR	0.1uF 16V Z	
C7626	NCB31CK-104X	C CAPACITOR	0.1uF 16V K	
C7627	NCF31CZ-104X	C CAPACITOR	0.1uF 16V Z	
C7628	NBP41EM-475X-B	TA E CAPACITOR	4.7uF 25V M	
C7629	NBP21CM-335X	TA E CAPACITOR	3.3uF 16V M	
C7630	NBP41EM-475X-B	TA E CAPACITOR	4.7uF 25V M	
C7632	NBP41EM-475X-B	TA E CAPACITOR	4.7uF 25V M	
C7634	NCB21AK-225X	C CAPACITOR	2.2uF 10V K	
C7637	NCB31EK-103X	C CAPACITOR	0.01uF 25V K	
C7639	NBP41CM-106X	TA E CAPACITOR	10uF 16V M	
C7642	NCF31CZ-104X	C CAPACITOR	0.1uF 16V Z	
C7653	NCB31EK-103X	C CAPACITOR	0.01uF 25V K	
C7654	NCB21AK-105X	C CAPACITOR	1uF 10V K	
C7655	NBE21AM-106X	TA E CAPACITOR	10uF 10V M	
R3	NRSA63J-103X	MG RESISTOR	10kΩ 1/16W J	
R4	NRSA63J-332X	MG RESISTOR	3.3kΩ 1/16W J	
R5	NRSA63J-682X	MG RESISTOR	6.8kΩ 1/16W J	
R6	NRSA63J-223X	MG RESISTOR	22kΩ 1/16W J	
R7	NRSA63J-103X	MG RESISTOR	10kΩ 1/16W J	
R8	NRSA63J-332X	MG RESISTOR	3.3kΩ 1/16W J	
R9	NRSA63J-682X	MG RESISTOR	6.8kΩ 1/16W J	
R18	NRSA63J-473X	MG RESISTOR	47kΩ 1/16W J	
R19	NRSA63J-103X	MG RESISTOR	10kΩ 1/16W J	
R21	NRSA63J-103X	MG RESISTOR	10kΩ 1/16W J	
R22	NRSA63J-473X	MG RESISTOR	47kΩ 1/16W J	
R23	NRSA63J-104X	MG RESISTOR	100kΩ 1/16W J	
R25	NRSA63J-473X	MG RESISTOR	47kΩ 1/16W J	
R29	NRSA63J-0R0X	MG RESISTOR	0Ω 1/16W J	
R30	NRSA63J-0R0X	MG RESISTOR	0Ω 1/16W J	
R31	NRSA63J-0R0X	MG RESISTOR	0Ω 1/16W J	
R32	NRSA63J-0R0X	MG RESISTOR	0Ω 1/16W J	
R7601	NRVA63D-622X	CMF RESISTOR	6.2kΩ 1/16W D	
R7602	NRSA63J-153X	MG RESISTOR	15kΩ 1/16W J	
R7604	NRSA63D-273X	MG RESISTOR	27kΩ 1/16W D	
R7605	NRSA63J-0R0X	MG RESISTOR	0Ω 1/16W J	
R7606	NRSA63J-0R0X	MG RESISTOR	0Ω 1/16W J	
R7607	NRSA63J-0R0X	MG RESISTOR	0Ω 1/16W J	
R7608	NRSA63J-153X	MG RESISTOR	15kΩ 1/16W J	
R7609	NRVA63D-223X	CMF RESISTOR	22kΩ 1/16W D	
R7610	NRVA63D-433X	CMF RESISTOR	43kΩ 1/16W D	
R7611	NRVA63D-821X	CMF RESISTOR	820Ω 1/16W D	
R7612	NRVA63D-223X	CMF RESISTOR	22kΩ 1/16W D	
R7613	NRVA63D-223X	CMF RESISTOR	22kΩ 1/16W D	
R7614	NRVA63D-223X	CMF RESISTOR	22kΩ 1/16W D	
R7615	NRSA63J-223X	MG RESISTOR	22kΩ 1/16W J	
R7616	NRSA63J-223X	MG RESISTOR	22kΩ 1/16W J	
R7617	NRSA02J-330X	MG RESISTOR	33Ω 1/10W J	
R7618	NRSA02J-330X	MG RESISTOR	33Ω 1/10W J	
R7619	NRSA63D-103X	MG RESISTOR	10kΩ 1/16W D	
R7621	NRSA63J-103X	MG RESISTOR	10kΩ 1/16W J	
R7622	NRSA63J-103X	MG RESISTOR	10kΩ 1/16W J	
R7630	NRSA63J-223X	MG RESISTOR	22kΩ 1/16W J	
R7634	NRSA63J-0R0X	MG RESISTOR	0Ω 1/16W J	
R7636	NRSA63J-101X	MG RESISTOR	100Ω 1/16W J	
R7637	NRSA63J-101X	MG RESISTOR	100Ω 1/16W J	
R7638	NRSA63J-101X	MG RESISTOR	100Ω 1/16W J	
R7639	NRSA63D-912X	MG RESISTOR	9.1kΩ 1/16W D	
R7640	NRSA63D-273X	MG RESISTOR	27kΩ 1/16W D	
R7641	NRSA63D-332X	MG RESISTOR	3.3kΩ 1/16W D	
R7642	NRSA63J-153X	MG RESISTOR	15kΩ 1/16W J	
R7645	NRSA63J-0R0X	MG RESISTOR	0Ω 1/16W J	
R7647	NRSA63J-0R0X	MG RESISTOR	0Ω 1/16W J	
R7648	NRSA63D-183X	MG RESISTOR	18kΩ 1/16W D	

⚠ Symbol No.	Part No.	Part Name	Description	Local
R7651	NRSA63J-223X	MG RESISTOR	22kΩ 1/16W J	
R7653	NRSA63J-0R0X	MG RESISTOR	0Ω 1/16W J	
R7654	NRSA63D-122X	MG RESISTOR	1.2kΩ 1/16W D	
R7655	NRSA63D-333X	MG RESISTOR	33kΩ 1/16W D	
R7663	NRSA63J-103X	MG RESISTOR	10kΩ 1/16W J	
R7664	NRSA63J-101X	MG RESISTOR	100Ω 1/16W J	
R7665	NRSA63D-683X	MG RESISTOR	68kΩ 1/16W D	
R7666	NRSA63D-473X	MG RESISTOR	47kΩ 1/16W D	
R7667	NRSA63D-561X	MG RESISTOR	560Ω 1/16W D	
L10	NQR0129-002X	FERRITE BEADS		
L7601	NQL38DK-100X	P COIL	10uH K	
L7602	NQL38DK-100X	P COIL	10uH K	
L7603	NQL38DK-100X	P COIL	10uH K	
L7604	NQL38DK-100X	P COIL	10uH K	
L7605	NQL38DK-100X	P COIL	10uH K	
L7607	NQL38DK-100X	P COIL	10uH K	
CN761	QGF0508F1-40X	CONNECTOR	MAIN FFC/FPC (1-40)	
CN762	QGF0532F2-10X	CONNECTOR	DSC FFC/FPC (1-10)	
CN763	QGF0532F2-20X	CONNECTOR	2.5 FFC/FPC (1-20)	
CN765	QGF0506F2-32X	CONNECTOR	LCD BL FFC/FPC (1-32)	
CN766	NNZ0058-001X	SD CARD CONNECTOR	SD/MMC	
J7601	QND0087-001	S JACK		
SW2	NSW0198-001X	TACT SWITCH	STOP	
SW3	NSW0198-001X	TACT SWITCH	REW	
SW4	NSW0198-001X	TACT SWITCH	FF	
SW5	NSW0198-001X	TACT SWITCH	PLAY/PAUSE	
SW6	NSW0099-001X	SLIDE SWITCH	DSC	
SW7	NSW0198-001X	TACT SWITCH		
SW8	NSW0198-001X	TACT SWITCH		
SW7601	QSW0451-001	DETECT SW	2.5 OPN SW	
OT1	LY30030-0V7A	SPACER(A)	(x2)	
WR1	QUQ105-4007AA	FFC WIRE	MAIN-M.FFC	
WR2	QUQ105-1007AA	FFC WIRE	MAIN-M.FFC	

BL2.5 BOARD ASSEMBLY <03>

⚠ Symbol No.	Part No.	Part Name	Description	Local
PW1	YB20964A	BL2.5 BOARD ASSY		
IC7504	DN8797MS-X	IC	TEZUKE	
Q7501	2SD1664/QR/-W	TRANSISTOR		
Q7502	2SD1664/QR/-W	TRANSISTOR		
Q7503	DTA144EE-X	DIGI TRANSISTOR		
Q7503 or	UN9113J-X	DIGI TRANSISTOR		
Q7503 or	RN2104-X	DIGI TRANSISTOR		
Q7503 or	BCR198T-X	DIGI TRANSISTOR		
Q7504	DTC144EE-X	DIGI TRANSISTOR		
Q7504 or	UN9213J-X	DIGI TRANSISTOR		
Q7504 or	RN1104-X	DIGI TRANSISTOR		
Q7504 or	BCR148T-X	DIGI TRANSISTOR		
C7501	NCZ1016-120X	C CAPACITOR	12pF 2kV J	
C7502	NCB21EK-273X	C CAPACITOR	0.027uF 25V K	
C7503	NCB31EK-103X	C CAPACITOR	0.01uF 25V K	
C7504	NCB10JK-106X	C CAPACITOR	10uF 6.3V K	
R7501	NRSA63J-102X	MG RESISTOR	1kΩ 1/16W J	
R7502	NRSA63J-102X	MG RESISTOR	1kΩ 1/16W J	
R7503	NRSA63J-102X	MG RESISTOR	1kΩ 1/16W J	
R7504	NRSA63J-0R0X	MG RESISTOR	0Ω 1/16W J	
R7511	NRSA63J-0R0X	MG RESISTOR	0Ω 1/16W J	
R7512	NRSA63J-0R0X	MG RESISTOR	0Ω 1/16W J	
R7513	NRSA63J-0R0X	MG RESISTOR	0Ω 1/16W J	
L7501	NQLZ010-680X	COIL	68uH	
T7501	NQS0056-001X	SW TARNSF		
CN7601	QGF0534F1-16X	CONNECTOR	FFC/FPC (1-16)	
CN7602	QGF0534F1-16X	CONNECTOR	FFC/FPC (1-16)	
CN7603	QGF0534F1-24X	CONNECTOR	FFC/FPC (1-24)	
⚠ F7501	NMFZ007-R40X-K	FUSE	0.4A 50V	
WR1	QAL0464-001	FPC	TEZUKE	

CCD BOARD ASSEMBLY <04>

⚠ Symbol No.	Part No.	Part Name	Description	Local
PW1	YB20966A-01-SS	CCD BOARD ASSY		
Q5001	2SC3931/CD/-X	TRANSISTOR		
C5001	NBP41EM-475X-B	TA E CAPACITOR	4.7uF 25V M	
C5002	NCB31CK-104X	C CAPACITOR	0.1uF 16V K	
C5003	NBP21CM-106X	TA E CAPACITOR	10uF 16V M	
C5004	NCB31CK-104X	C CAPACITOR	0.1uF 16V K	
C5005	NDC31HJ-102X	C CAPACITOR	1000pF 50V J	
C5006	NCB31EK-103X	C CAPACITOR	0.01uF 25V K	
R5001	NRSA63J-222X	MG RESISTOR	2.2kΩ 1/16W J	
R5002	NRSA63J-105X	MG RESISTOR	1MΩ 1/16W J	
R5003	NRSA63J-105X	MG RESISTOR	1MΩ 1/16W J	
R5004	NRSA63J-102X	MG RESISTOR	1kΩ 1/16W J	
R5005	NRSA63J-0R0X	MG RESISTOR	0Ω 1/16W J	
R5006	NRSA63J-0R0X	MG RESISTOR	0Ω 1/16W J	
L5001	NQL144K-100X	P COIL	0.30Ω 10uH K	
L5002	NQL315K-100X	COIL	10uH K	
WR1	WJM0369-001A	E-SI C WIRE C-F	JP_WIRE	

PREMDA BOARD ASSEMBLY <05>

⚠ Symbol No.	Part No.	Part Name	Description	Local
PW1	YB10445A-02	PREMDA BOARD ASSY		
⚠ IC1601	BD6637KV	IC	MDA 64PIN	
IC1701	BA10358FVM-W	IC	REELAMP5V	
IC1702	LM393DR-X	IC	REELSMT	
IC3501	JCY0132	IC		
IC3502	SN74AHC1G04K-X	IC		
IC3502 or	SN74AHC1G04DC-X	IC(DIGITAL)		
Q1601	UMC3N-W	DIGI TRANSISTOR	LD ON	
D1602	DAP222-X	DIODE ARRAY	LD OUT	
D1602 or	MA132WA-X	SI DIODE		
D1603	DAP222-X	DIODE ARRAY	LD ON	
D1603 or	MA132WA-X	SI DIODE		
D1604	DAP222-X	DIODE ARRAY	C.ERR-3V	
D1604 or	MA132WA-X	SI DIODE		
C1601	NCB31EK-103X	C CAPACITOR	0.01uF 25V K	
C1602	NBE20JM-106X	TA E CAPACITOR	10uF 6.3V M	
C1603	NBE20JM-106X	TA E CAPACITOR	10uF 6.3V M	
C1605	NCB31CK-104X	C CAPACITOR	0.1uF 16V K	
C1606	NCB31HK-152X	C CAPACITOR	1500pF 50V K	
C1607	NCB31CK-473X	C CAPACITOR	0.047uF 16V K	
C1614	NBE21AM-106X	TA E CAPACITOR	10uF 10V M	
C1618	NCB31HK-222X	C CAPACITOR	2200pF 50V K	
C1619	NCB31HK-222X	C CAPACITOR	2200pF 50V K	
C1620	NCB31HK-222X	C CAPACITOR	2200pF 50V K	
C1621	NCB30JK-105X	C CAPACITOR	1uF 6.3V K	
C1622	NCB31CK-223X	C CAPACITOR	0.022uF 16V K	
C1623	NCB31CK-473X	C CAPACITOR	0.047uF 16V K	
C1624	NCB31EK-103X	C CAPACITOR	0.01uF 25V K	
C1625	NCS31HJ-101X	C CAPACITOR	100pF 50V J	
C1626	NCB31HK-472X	C CAPACITOR	4700pF 50V K	
C1627	NCB31HK-472X	C CAPACITOR	4700pF 50V K	
C1628	NCB21CK-224X	C CAPACITOR	0.22uF 16V K	
C1629	NCB21EK-224X	C CAPACITOR	0.22uF 25V K	
C1630	NCB21EK-224X	C CAPACITOR	0.22uF 25V K	
C1631	NBE20JM-106X	TA E CAPACITOR	10uF 6.3V M	
C1632	NCB21CK-474X	C CAPACITOR	0.47uF 16V K	
C1633	NCB21CK-474X	C CAPACITOR	0.47uF 16V K	
C1701	NCB31CK-104X	C CAPACITOR	0.1uF 16V K	
C1702	NCB31CK-104X	C CAPACITOR	0.1uF 16V K	
C3501	NBE20JM-106X	TA E CAPACITOR	10uF 6.3V M	
C3502	NBE20JM-106X	TA E CAPACITOR	10uF 6.3V M	
C3503	NBE20JM-106X	TA E CAPACITOR	10uF 6.3V M	

⚠ Symbol No.	Part No.	Part Name	Description	Local
C3504	NCB31CK-473X	C CAPACITOR	0.047uF 16V K	
C3505	NCB31CK-223X	C CAPACITOR	0.022uF 16V K	
C3506	NCB21AK-105X	C CAPACITOR	1uF 10V K	
C3507	NCB31EK-103X	C CAPACITOR	0.01uF 25V K	
C3508	NCB31EK-103X	C CAPACITOR	0.01uF 25V K	
C3509	NCB31EK-103X	C CAPACITOR	0.01uF 25V K	
C3510	NCB31CK-104X	C CAPACITOR	0.1uF 16V K	
C3511	NCB31EK-103X	C CAPACITOR	0.01uF 25V K	
C3512	NCB31CK-104X	C CAPACITOR	0.1uF 16V K	
C3513	NCB31CK-104X	C CAPACITOR	0.1uF 16V K	
C3514	NCB31CK-473X	C CAPACITOR	0.047uF 16V K	
C3515	NCB31CK-473X	C CAPACITOR	0.047uF 16V K	
C3516	NCB31CK-473X	C CAPACITOR	0.047uF 16V K	
C3517	NCB31EK-103X	C CAPACITOR	0.01uF 25V K	
C3518	NCB31EK-103X	C CAPACITOR	0.01uF 25V K	
C3519	NCB31HK-102X	C CAPACITOR	1000pF 50V K	
C3520	NCB31EK-103X	C CAPACITOR	0.01uF 25V K	
C3521	NCB31CK-104X	C CAPACITOR	0.1uF 16V K	
C3522	NCB20JM-475X	C CAPACITOR	4.7uF 6.3V M	
C3523	NCB31EK-103X	C CAPACITOR	0.01uF 25V K	
C3524	NCB31EK-103X	C CAPACITOR	0.01uF 25V K	
C3525	NCB20JM-475X	C CAPACITOR	4.7uF 6.3V M	
C3526	NCB31EK-103X	C CAPACITOR	0.01uF 25V K	
C3527	NDC31HJ-221X	C CAPACITOR	220pF 50V J	
C3528	NCB31EK-103X	C CAPACITOR	0.01uF 25V K	
R1601	NRSA63J-681X	MG RESISTOR	680Ω 1/16W J	
R1602	NRSA63J-124X	MG RESISTOR	120kΩ 1/16W J	
R1603	NRSA63J-472X	MG RESISTOR	4.7kΩ 1/16W J	
R1604	NRSA63J-104X	MG RESISTOR	100kΩ 1/16W J	
R1610	NRSA63J-391X	MG RESISTOR	390Ω 1/16W J	
R1611	NRSA63J-391X	MG RESISTOR	390Ω 1/16W J	
R1612	NRSA63J-104X	MG RESISTOR	100kΩ 1/16W J	
R1613	NRSA63J-102X	MG RESISTOR	1kΩ 1/16W J	
R1614	NRZ0072-R330X	MG RESISTOR	0.33Ω 1/4W F	
R1616	NRSA63D-392X	MG RESISTOR	3.9kΩ 1/16W D	
R1617	NRZ0072-R330X	MG RESISTOR	0.33Ω 1/4W F	
R1620	NRSA63J-683X	MG RESISTOR	68kΩ 1/16W J	
R1621	NRSA63J-103X	MG RESISTOR	10kΩ 1/16W J	
R1622	NRSA63J-103X	MG RESISTOR	10kΩ 1/16W J	
R1624	NRSA63D-183X	MG RESISTOR	18kΩ 1/16W D	
R1625	NRSA63D-681X	MG RESISTOR	680Ω 1/16W D	
R1629	NRSA63J-564X	MG RESISTOR	560kΩ 1/16W J	
R1630	NRSA63J-0R0X	MG RESISTOR	0Ω 1/16W J	
R1631	NRSA63J-0R0X	MG RESISTOR	0Ω 1/16W J	
R1635	NRSA63J-332X	MG RESISTOR	3.3kΩ 1/16W J	
R1636	NRSA63J-123X	MG RESISTOR	12kΩ 1/16W J	
R1637	NRSA63J-154X	MG RESISTOR	150kΩ 1/16W J	
R1638	NRSA63J-0R0X	MG RESISTOR	0Ω 1/16W J	
R1639	NRSA02J-0R0X	MG RESISTOR	0Ω 1/10W J	
R1640	NRSA02J-0R0X	MG RESISTOR	0Ω 1/10W J	
R1641	NRSA63J-0R0X	MG RESISTOR	0Ω 1/16W J	
R1642	NRSA63J-0R0X	MG RESISTOR	0Ω 1/16W J	
R1701	NRSA63J-823X	MG RESISTOR	82kΩ 1/16W J	
R1702	NRSA63J-222X	MG RESISTOR	2.2kΩ 1/16W J	
R1703	NRSA63J-222X	MG RESISTOR	2.2kΩ 1/16W J	
R1704	NRSA63J-222X	MG RESISTOR	2.2kΩ 1/16W J	
R1705	NRSA63J-222X	MG RESISTOR	2.2kΩ 1/16W J	
R1706	NRSA63J-823X	MG RESISTOR	82kΩ 1/16W J	
R1707	NRSA63J-103X	MG RESISTOR	10kΩ 1/16W J	
R1708	NRSA63J-124X	MG RESISTOR	120kΩ 1/16W J	
R1709	NRSA63J-103X	MG RESISTOR	10kΩ 1/16W J	
R1710	NRSA63J-124X	MG RESISTOR	120kΩ 1/16W J	
R1711	NRSA63J-102X	MG RESISTOR	1kΩ 1/16W J	
R1712	NRSA63J-102X	MG RESISTOR	1kΩ 1/16W J	
R3501	NRSA63J-471X	MG RESISTOR	470Ω 1/16W J	
R3502	NRSA63J-104X	MG RESISTOR	100kΩ 1/16W J	
R3503	NRSA63J-102X	MG RESISTOR	1kΩ 1/16W J	
R3504	NRSA63D-241X	MG RESISTOR	240Ω 1/16W D	
R3505	NRSA63D-241X	MG RESISTOR	240Ω 1/16W D	
R3506	NRSA63D-241X	MG RESISTOR	240Ω 1/16W D	
R3507	NRSA63D-241X	MG RESISTOR	240Ω 1/16W D	
R3508	NRSA63J-223X	MG RESISTOR	22kΩ 1/16W J	
R3511	NRSA63J-101X	MG RESISTOR	100Ω 1/16W J	
L3501	NQR0006-001X	FERRITE BEADS		
L3502	NQL402M-100X	COIL	10uH M	
L3503	NQR0006-001X	FERRITE BEADS		
L3504	NQR0006-001X	FERRITE BEADS		
L3505	NQR0006-001X	FERRITE BEADS		
CN401	QGF0508F1-40X	CONNECTOR	MAIN1(PRE) FFC/FPC (1-40)	
CN402	QGF0520F1-08X	CONNECTOR	HEAD FFC/FPC (1-8)	
CN403	QGF0505F2-06X	CONNECTOR	LOADING FFC/FPC (1-6)	
CN404	QGF0534F1-11X	CONNECTOR	DRUM FFC/FPC (1-11)	
CN405	QGF0534F1-18X	CONNECTOR	CAPSTAN FFC/FPC (1-18)	
CN406	QGF0505F2-16X	CONNECTOR	SENSOR FFC/FPC (1-16)	
CN407	QGF0508F1-06X	CONNECTOR	ROT E SW FFC/FPC (1-6)	
CN408	QGF0508F1-40X	CONNECTOR	MAIN2(MDA) FFC/FPC (1-40)	
⚠ F1601	NMFZ007-R20X-K	FUSE	1608 UNREG 0.2A 50V	
⚠ F1602	NMFZ007-R50X-K	FUSE	1608 REG3V 0.5A 50V	
SD1	LY33021-001A	SHIELD COVER(P/R)	PRE S-CASE	

FRONT BOARD ASSEMBLY <06>

⚠ Symbol No.	Part No.	Part Name	Description	Local
PW1	YB10446A-01	FRONT BOARD ASSY		
Q9001	BC847PN-X	PAIR TRANSISTOR		
Q9002	BC847PN-X	PAIR TRANSISTOR		
Q9003	2SC4617/RS/-X	TRANSISTOR	ON/OFF	
D9001	NSPW500BS/CRS/	LED	LIGHTLED	
D9002	NSPW500BS/CRS/	LED	LIGHTLED	
R9001	NRSA63J-182X	MG RESISTOR	1.8kΩ 1/16W J	
R9002	NRSA63J-152X	MG RESISTOR	1.5kΩ 1/16W J	
R9003	NRSA63J-152X	MG RESISTOR	1.5kΩ 1/16W J	
R9004	NRSA63J-391X	MG RESISTOR	390Ω 1/16W J	
R9005	NRSA63J-270X	MG RESISTOR	27Ω 1/16W J	
R9006	NRSA63J-270X	MG RESISTOR	27Ω 1/16W J	
R9007	NRSA63J-103X	MG RESISTOR	10kΩ 1/16W J	
CN9001	QGF0508F1-06X	CONNECTOR	FFC/FPC (1-6)	
SW9001	NSW0150-001X	PUSH SWITCH	EJECT	
HD1	LY33654-001A	HOLDER(LED)		
OT1	LY30031-003A	SPECIAL SCREW		
WR1	QUQ105-06X2AA	FFC WIRE	FRONT FFC	

C-VF BOARD ASSEMBLY <07>

⚠ Symbol No.	Part No.	Part Name	Description	Local
PW1	YB20965A-01	C-VF BOARD ASSY		
Q7001	PUMX1-W	PAIR TRANSISTOR		
Q7001 or	BC847S-X	PAIR TRANSISTOR		
D7001	E1S35AW0C501-X	LED		
C7004	NDC31HJ-101X	C CAPACITOR	100pF 50V J	
C7005	NDC31HJ-101X	C CAPACITOR	100pF 50V J	
R7001	NRSA63J-332X	MG RESISTOR	3.3kΩ 1/16W J	
R7002	NRSA63J-561X	MG RESISTOR	560Ω 1/16W J	
R7003	NRSA63J-470X	MG RESISTOR	47Ω 1/16W J	
R7004	NRSA63J-103X	MG RESISTOR	10kΩ 1/16W J	
R7005	NRSA63J-103X	MG RESISTOR	10kΩ 1/16W J	
CN7001	QGF0532F2-18X	CONNECTOR	FFC/FPC (1-18)	
CN7002	QGF0507F3-20X	CONNECTOR	FFC/FPC (1-20)	

SPECIFICATION

Camcorder

For General

Power supply
DC 11.0 V (Using AC Adapter)
DC 7.2 V (Using battery pack)
Power consumption
Approx. 3.5 W (LCD monitor off, viewfinder on)
Approx. 4.6 W (LCD monitor on, viewfinder off)
Approx. 8.6 W (Maximum)
Dimensions (W x H x D)
71 mm x 91 mm x 118 mm
(2-13/16" x 3-5/8" x 4-11/16") (with the LCD monitor closed and the viewfinder pushed back in)
Weight
Approx. 500 g (1.1 lbs)
(without cassette and battery)
Approx. 590 g (1.3 lbs)
(incl. cassette and battery)
Operating temperature
0°C to 40°C (32°F to 104°F)
Operating humidity
35% to 80%
Storage temperature
–20°C to 50°C (–4°F to 122°F)
Pickup
1/4" CCD
Lens
F 1.8, f = 3.8 mm to 38.0 mm, 10:1 power zoom lens
Filter diameter
ø30.5 mm
LCD monitor
2.37" diagonally measured, LCD panel/TFT active matrix system
Viewfinder
Electronic viewfinder with 0.24" color LCD
Speaker
Monaural
White LED Light
Effective distance: 1.5 m

For Digital Video Camera

Format
DV format (SD mode)
Signal format
NTSC standard
Recording/Playback format
Video: Digital component recording
Audio: PCM digital recording, 32 kHz 4-channel (12-bit), 48 kHz 2-channel (16-bit)
Cassette
Mini DV cassette
Tape speed
SP: 18.8 mm/s, LP: 12.5 mm/s
Maximum recording time (using 80 min. cassette)
SP: 80 min., LP: 120 min.

For Digital Still Camera

Storage media
SD Memory Card/MultiMediaCard
Compression system
Still image: JPEG (compatible)
File size
Still image:
4 modes (1600 x 1200 pixels/1280 x 960 pixels/1024 x 768 pixels/640 x 480 pixels)
Picture quality
2 modes (FINE/STANDARD)
Approximate number of storable images
☞ pg. 18

For Connectors

S
S-Video input:
Y: 0.8 V to 1.2 V (p-p), 75 Ω, analog
C: 0.2 V to 0.4 V (p-p), 75 Ω, analog
S-Video output:
Y: 1.0 V (p-p), 75 Ω, analog
C: 0.29 V (p-p), 75 Ω, analog
AV
Video input: 0.8 V to 1.2 V (p-p), 75 Ω, analog
Video output: 1.0 V (p-p), 75 Ω, analog
Audio input: 300 mV (rms), 50 kΩ, analog, stereo
Audio output: 300 mV (rms), 1 kΩ, analog, stereo
DV
Input/output: 4-pin, IEEE 1394 compliant
USB
5-pin

AC Adapter

Power requirement
AC 110 V to 240 V∿, 50 Hz/60 Hz
Output
DC 11 V ⎓, 1 A

Specifications shown are for SP mode unless otherwise indicated. E & O.E. Design and specifications subject to change without notice.

SECTION 1
PRECAUTION

1.1 SAFTY PRECAUTIONS

Prior to shipment from the factory, JVC products are strictly inspected to conform with the recognized product safety and electrical codes of the countries in which they are to be sold.However,in order to maintain such compliance, it is equally important to implement the following precautions when a set is being serviced.

1.1.1 Precautions during Servicing

(1) Locations requiring special caution are denoted by labels and inscriptions on the cabinet, chassis and certain parts of the product.When performing service, be sure to read and comply with these and other cautionary notices appearing in the operation and service manuals.

(2) Parts identified by the ⚠symbol and shaded ( ) parts are critical for safety.
Replace only with specified part numbers.

NOTE :
Parts in this category also include those specified to comply with X-ray emission standards for products using cathode ray tubes and those specified for compliance with various regulations regarding spurious radiation emission.

(3) Fuse replacement caution notice.
Caution for continued protection against fire hazard.
Replace only with same type and rated fuse(s) as specified.

(4) Use specified internal wiring. Note especially:
- Wires covered with PVC tubing
- Double insulated wires
- High voltage leads

(5) Use specified insulating materials for hazardous live parts. Note especially:
- Insulation Tape
- PVC tubing
- Spacers
- Insulation sheets for transistors
- Barrier

(6) When replacing AC primary side components (transformers, power cords, noise blocking capacitors, etc.) wrap ends of wires securely about the terminals before soldering.

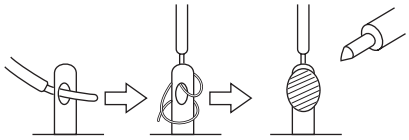

Fig.1-1-1

(7) Observe that wires do not contact heat producing parts (heatsinks, oxide metal film resistors, fusible resistors, etc.)

(8) Check that replaced wires do not contact sharp edged or pointed parts.

(9) When a power cord has been replaced, check that 10-15 kg of force in any direction will not loosen it.

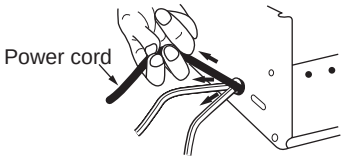

Fig.1-1-2

(10) Also check areas surrounding repaired locations.

(11) Products using cathode ray tubes (CRTs)In regard to such products, the cathode ray tubes themselves, the high voltage circuits, and related circuits are specified for compliance with recognized codes pertaining to X-ray emission. Consequently, when servicing these products, replace the cathode ray tubes and other parts with only the specified parts. Under no circumstances attempt to modify these circuits.Unauthorized modification can increase the high voltage value and cause X-ray emission from the cathode ray tube.

(12) Crimp type wire connectorIn such cases as when replacing the power transformer in sets where the connections between the power cord and power trans former primary lead wires are performed using crimp type connectors, if replacing the connectors is unavoidable, in order to prevent safety hazards, perform carefully and precisely according to the following steps.
- **Connector part number** :E03830-001
- **Required tool** : Connector crimping tool of the proper type which will not damage insulated parts.
- **Replacement procedure**
  a) Remove the old connector by cutting the wires at a point close to the connector.Important : Do not reuse a connector (discard it).

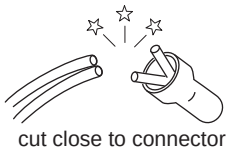

Fig.1-1-3

  b) Strip about 15 mm of the insulation from the ends of the wires. If the wires are stranded, twist the strands to avoid frayed conductors.

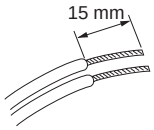

Fig.1-1-4

  c) Align the lengths of the wires to be connected. Insert the wires fully into the connector.

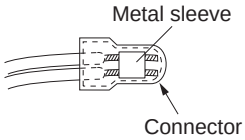

Fig.1-1-5

  d) As shown in Fig.1-1-6, use the crimping tool to crimp the metal sleeve at the center position. Be sure to crimp fully to the complete closure of the tool.

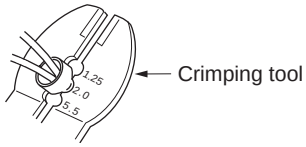

Fig.1-1-6

  e) Check the four points noted in Fig.1-1-7.

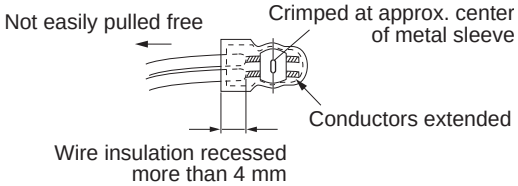

Fig.1-1-7

1.1.2 Safety Check after Servicing

Examine the area surrounding the repaired location for damage or deterioration. Observe that screws, parts and wires have been returned to original positions, Afterwards, perform the following tests and confirm the specified values in order to verify compliance with safety standards.

(1) Insulation resistance test
Confirm the specified insulation resistance or greater between power cord plug prongs and externally exposed parts of the set (RF terminals, antenna terminals, video and audio input and output terminals, microphone jacks, earphone jacks, etc.).See table 1 below.

(2) Dielectric strength test
Confirm specified dielectric strength or greater between power cord plug prongs and exposed accessible parts of the set (RF terminals, antenna terminals, video and audio input and output terminals, microphone jacks, earphone jacks, etc.). See Fig.1-1-11 below.

(3) Clearance distance
When replacing primary circuit components, confirm specified clearance distance (d), (d') between soldered terminals, and between terminals and surrounding metallic parts. See Fig.1-1-11 below.

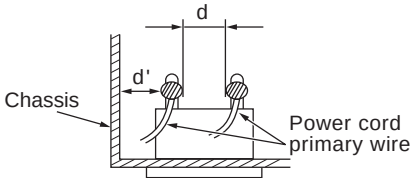

Fig.1-1-8

(4) Leakage current test
Confirm specified or lower leakage current between earth ground/power cord plug prongs and externally exposed accessible parts (RF terminals, antenna terminals, video and audio input and output terminals, microphone jacks, earphone jacks, etc.).
Measuring Method : (Power ON)Insert load Z between earth ground/power cord plug prongs and externally exposed accessible parts. Use an AC voltmeter to measure across both terminals of load Z. See Fig.1-1-9 and following Fig.1-1-12.

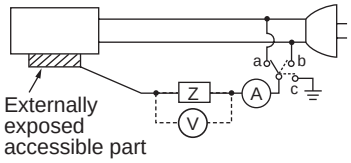

Fig.1-1-9

(5) Grounding (Class 1 model only)
Confirm specified or lower grounding impedance between earth pin in AC inlet and externally exposed accessible parts (Video in, Video out, Audio in, Audio out or Fixing screw etc.).Measuring Method:
Connect milli ohm meter between earth pin in AC inlet and exposed accessible parts. See Fig.1-1-10 and grounding specifications.

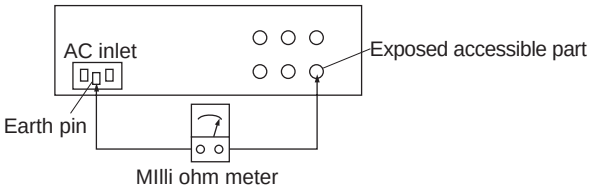

Grounding Specifications

Region	Grounding Impedance (Z)
USA & Canada	Z ≦ 0.1 ohm
Europe & Australia	Z ≦ 0.5 ohm

Fig.1-1-10

AC Line Voltage	Region	Insulation Resistance (R)	Dielectric Strength	Clearance Distance (d), (d')
100 V	Japan	R ≧ 1 MΩ/500 V DC	AC 1 kV 1 minute	d, d' ≧ 3 mm
100 to 240 V			AC 1.5 kV 1 minute	d, d' ≧ 4 mm
110 to 130 V	USA & Canada	1 MΩ ≦ R ≦ 12 MΩ/500 V DC	AC 1 kV 1 minute	d, d' ≧ 3.2 mm
110 to 130 V 200 to 240 V	Europe & Australia	R ≧ 10 MΩ/500 V DC	AC 3 kV 1 minute (Class Ⅱ) AC 1.5 kV 1 minute (Class Ⅰ)	d ≧ 4 mm d' ≧ 8 mm (Power cord) d' ≧ 6 mm (Primary wire)

Fig.1-1-11

AC Line Voltage	Region	Load Z	Leakage Current (i)	a, b, c
100 V	Japan	1 kΩ	i ≦ 1 mA rms	Exposed accessible parts
110 to 130 V	USA & Canada	0.15 μF, 1.5 kΩ	i ≦ 0.5 mA rms	Exposed accessible parts
110 to 130 V 220 to 240 V	Europe & Australia	2 kΩ	i ≦ 0.7 mA peak i ≦ 2 mA dc	Antenna earth terminals
		50 kΩ	i ≦ 0.7 mA peak i ≦ 2 mA dc	Other terminals

Fig.1-1-12

NOTE :

These tables are unofficial and for reference only. Be sure to confirm the precise values for your particular country and locality.

SECTION 2
SPECIFIC SERVICE INSTRUCTIONS

2.1 DIFFERENCE LIST

The following table indicate main different points between models GR-D93US and GR-D94US.

MODEL	GR-D93US	GR-D94US
MEMORY CARD	YES(MMC 8MB)	YES(MMC 16MB)
BODY COLOR	Silver & Dark Blue	Silver & Premium Gray

SECTION 3
DISASSEMBLY

3.1 BEFORE ASSEMBLY AND DISASSEMBLY

3.1.1 Precautions

- Be sure to disconnect the power supply unit prior to mounting and soldering of parts.
- Prior to removing a component part that needs to disconnect its connector(s) and its screw(s), first disconnect the wire(s) from the connector(s), and then remove the screw(s).
- When connecting/disconnecting wires, pay enough attention not to damage the connectors.
- When inserting the flat wire to the connector, pay attention to the direction of the flat wire.
- Be careful in removing the parts to which some spacer or shield is attached for reinforcement or insulation.
- When replacing chip parts (especially IC parts), first remove the solder completely to prevent peeling of the pattern.
- Tighten screws properly during the procedures. Unless specified otherwise, tighten screws at a torque of 0.088N·m (0.9kgf·cm). However, 0.088N·m (0.9kgf·cm) is a value at the time of production. At the time of service, perform the procedure at a torque 10% less than 0.088N·m (0.9kgf·cm). (See "SERVICE NOTE" as for tightening torque.)

3.1.2 Destination of connectors

Two kinds of double-arrows in connection tables respectively show kinds of connector/wires.

⇔ : Flat wire ↔ : Wire ⬌ : Board to board (B-B)
: The connector of the side to remove

CONN. No.	CONNECTOR					PIN No.
CN2a	MAIN	CN101	⇔	MONI/BW	CN761	40
CN2b	MAIN	CN103	↔	MIC	CN762	2

3.1.3 Disconnection of connectors (Wires)

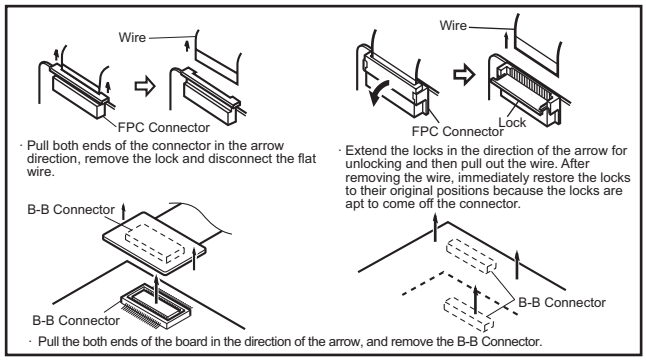

Fig.3-1-1

3.1.4 Tools required for disassembly and assembly

Torque driver YTU94088	Bit YTU94088-003	Tweezers P-895
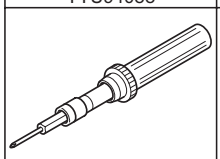	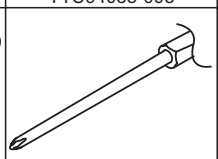	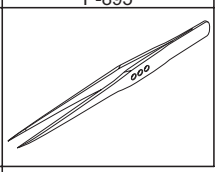
Chip IC replacement jig PTS40844-2	**Cleaning cloth KSMM-01**	
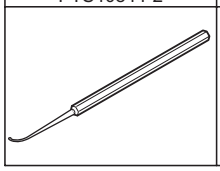	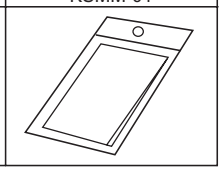	

Fig.3-1-2

- **Torque driver**
  Be sure to use to fastening the mechanism and exterior parts because those parts must strictly be controlled for tightening torque.
- **Bit**
  This bit is slightly longer than those set in conventional torque drivers.
- **Tweezers**
  To be used for removing and installing parts and wires.
- **Chip IC replacement jig**
  To be used for replacement of IC.
- **Cleaning cloth**
  Recommended cleaning cloth to wipe down the video heads, mechanism (tape transport system), optical lens surface.

3.2 ASSEMBLY AND DISASSEMBLY OF MAIN PARTS

3.2.1 Assembly and disassembly

When reassembling, perform the step(s) in reverse order.

STEP No.	PART	Fig. No.	POINT	NOTE
[1]	TOP COVER ASSY	Fig.C1	S1,2(L1)	-
[2]	UPPER ASSY (Inc. VF ASSY, SPEAKER/MONITOR)	Fig.C2-1	S2a,2(S2b),3(S2c) 2(S2d),S2e,S2c L2,CN2a,b	-
[8]	VF ASSY	Fig.C2-2	2(S8),L8,CN8a	NOTE 8a NOTE 8b
(∗1)	(∗2)	(∗3)	(∗4)	(∗5)

(∗1) Order of steps in Procedure
When reassembling, preform the step(s) in the reverseorder. These numbers are also used as the identification (location) No. of parts Figures.
(∗2) Part to be removed or installed.
(∗3) Fig. No. showing Procedure or Part Location.
C = CABINET
(∗4) Identification of part to be removed, unhooked, unlocked, released, unplugged, unclamped or unsoldered.
S = Screw
L = Lock, Release, Hook
SD = Solder
CN = Connector

[Example]

- 4 (S1a) = Remove 4 S1a screws.
- 3 (L1a) = Disengage 3 L1a hooks.
- 2 (SD1a) = Unsolder 2 SD1a points.
- CN1a = Remove a CN1a connector.

(∗5) Adjustment information for installation.

3.2.2 ASSEMBLY/DISASSEMBLY OF CABINET PARTS AND ELECTRICAL PARTS

●Disassembly procedure

STEP No.	PART NAME	Fig. No.	POINT	NOTE
[1]	ORNAMENT(TOP)	Fig.C1	2(L1)	-
[2]	COVER(JIG)		(S2)	-
[3]	COVER(UPPER)		2(S3),2(L3)	-
[4]	UPPER CASE ASSY (INCLUDE VF(COLOR)ASSY, MONITOR ASSY)	Fig.C2	2(S4a),3(S4b),(S4c),(S4a),(S4b), CN4a,CN4b	NOTE4
[5]	COVER(ZOOM)	Fig.C3	2(S5),(L5)	-
[6]	FRONT COVER ASSY	Fig.C4	(S6),2(L6a),(L6b)	NOTE6
[7]	REAR UNIT ASSY		CN7a,CN7b,(S7),2(L7a),(L7b)	NOTE7
[8]	LOWER CASE ASSY	Fig.C5	CN8a,CN8b,CN8c,2(S8a),3(S8b), (S8c),4(L8)	NOTE8
[9]	OP BLOCK ASSY	Fig.C6	CN9a,CN9b,2(S9),2(L9a),(L9b)	NOTE9
[10]	MAIN BOARD ASSY	Fig.C7	2(S10),2(L10),CN10a,CN10b	NOTE10
[11] /[12]	PREMDA BOARD ASSY /MECHANISM ASSY	Fig.C8	2(S11a),L11,SHIELD COVER, CN11a,b,c,d,e,f,2(S11b)	NOTE11
			3(S12),BRACKET(MECHA)ASSY	NOTE12
[13]	VF ASSY	Fig.C9	CN13,(S13a),(S13b),(L13)	NOTE13a,b
[14]	COVER(HINGE)	Fig.C10	(S14a),2(S14b)	-
[15]	MONITOR ASSY	Fig.C11	2(S15a),CN15,2(S15b)	NOTE15a,b
[16]	MONI-C BOARD ASSY	Fig.C12	SD16,2(S16a),2(S16b),2(L16), KNOB(SLIDE)	NOTE16a,b,c
[17]	SPEAKER	Fig.C13	2(S17a),(S17b),2(L17a,)BRACKET(HINGE), 2(S17a),2(L17b),BRACKET(SPK)	NOTE17

NOTE4:
Be careful not to cut the FPC.

NOTE6:
Be careful about the engagement of the wire.

NOTE7:
Be careful not to cut the FPC.
Be careful about the engagement of the wire.

NOTE8:
Be careful not to cut the FPC.
Be careful about the engagement of the wire.

NOTE9:
For the disassembly procedure of the OP BLOCK ASSEMBLY, see "3.2.4 ASSEMBLY/DISASSEMBLY OF [9] OP BLOCK ASSMBLY/CCD BOARD ASSEMBLY"

NOTE10:
Be careful not to cut the FPC.

NOTE11:
When removing/attaching the SHIELD COVER, be careful not to damage the FPC.

NOTE12:
When removing/attaching the BRACKET (MECHA) ASSEMBLY, be careful not to damage the FPC.
For the disassembly/assembly procedure of the MECHANISM ASSEMBLY, see the Service Manual "DVC MECHANISM (No.86700)."

NOTE13a:
Remove the SHEET and the screw if necessary.

NOTE13b:
For the disassembly/assembly procedure of the VF ASSEMBLY, see "3.2.5 DISASSEMBLY/ASSEMBLY OF [13] VF ASSEMBLY"

NOTE15a:
Be careful not to cut the FPC.

NOTE15b:
For the disassembly/assembly procedure of the MONITOR ASSEMBLY, see "3.2.3 DISASSEMBLY/ASSEMBLY OF [15] MONITOR ASSEMBLY"

NOTE16a:
Wires for the SPEAKER are soldered, and the BRACKET(SPK) fixes the SPEAKER. Therefore, prior to removing the MONI-C BOARD ASSEMBLY, unsolder the soldered points (SD16) so that the wires moves easily.

NOTE16b:
Remove the SHEET and the screw if necessary.

NOTE16c:
When attaching the MONI-C BOARD ASSEMBLY, be careful of the position of the KNOB(SLIDE) and the SWITCH of the BOARD.

NOTE17:
Be careful about the engagement of the wire.

●Destination of connectors

CN.NO.	CONNECTOR					PIN NO.
CN4a	MAIN	CN101	⇔	MONI-C	CN761	40
CN4b	MAIN	CN103	⇔	MONI-C	CN762	10
CN7a	MAIN	CN104	⇔	REAR UNIT ASSY	-	8
CN7b	MAIN	CN112	⇔	REAR UNIT ASSY	-	12
CN8a	MAIN	CN102	⇔	FRONT	CN9001	6
CN8b	MAIN	CN106	⇔	MIC	-	4
CN8c	MAIN	CN109	⇔	ZOOM UNIT	-	16
CN9a	MAIN	CN108	⇔	OP BLOCK ASSY	-	24
CN9b	MAIN	CN107	⇔	CCD	CN5001	20
CN10a	MAIN	CN111	⇔	PREMDA	CN408	40
CN10b	MAIN	CN110	⇔	PREMDA	CN401	40
CN11a	PREMDA	CN406	⇔	SENSOR	-	16
CN11b	PREMDA	CN405	⇔	CAPSTAN MOTOR	-	18
CN11c	PREMDA	CN404	⇔	DRUM MOTOR	CN901	11
CN11d	PREMDA	CN402	⇔	HEAD	-	8
CN11e	PREMDA	CN407	⇔	ROTARY ENCODER	-	6
CN11f	PREMDA	CN403	⇔	LOADING MOTOR	-	6
CN13	MONI-C	CN765	⇔	BL2.5	CN7601	32/16+16
CN15	MONI-C	CN763	⇔	VF ASSY	CN7001	20

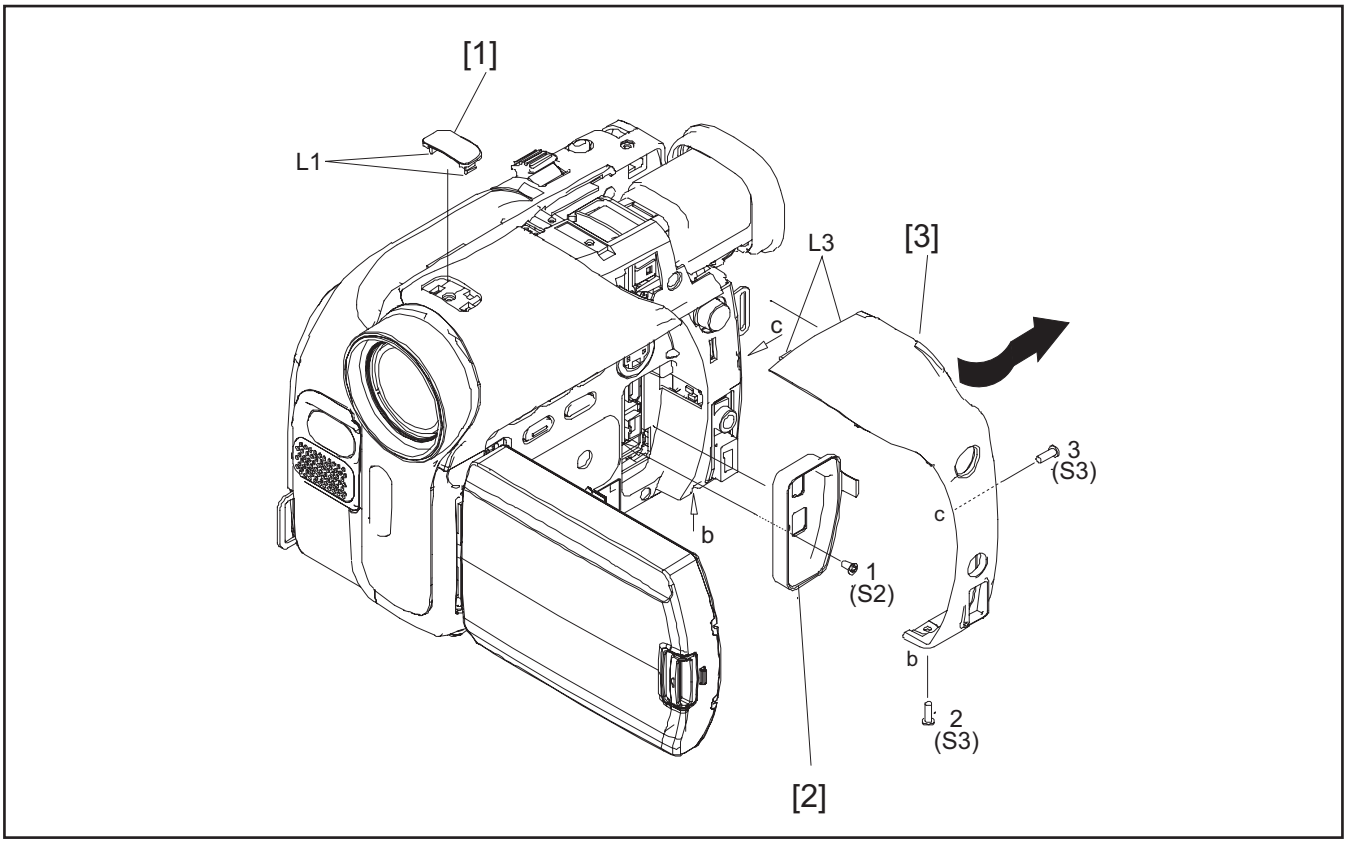
[1]
L1
L3
[3]
c
3
(S3)
c
b
1
(S2)
b
2
(S3)
[2]

Fig.C1

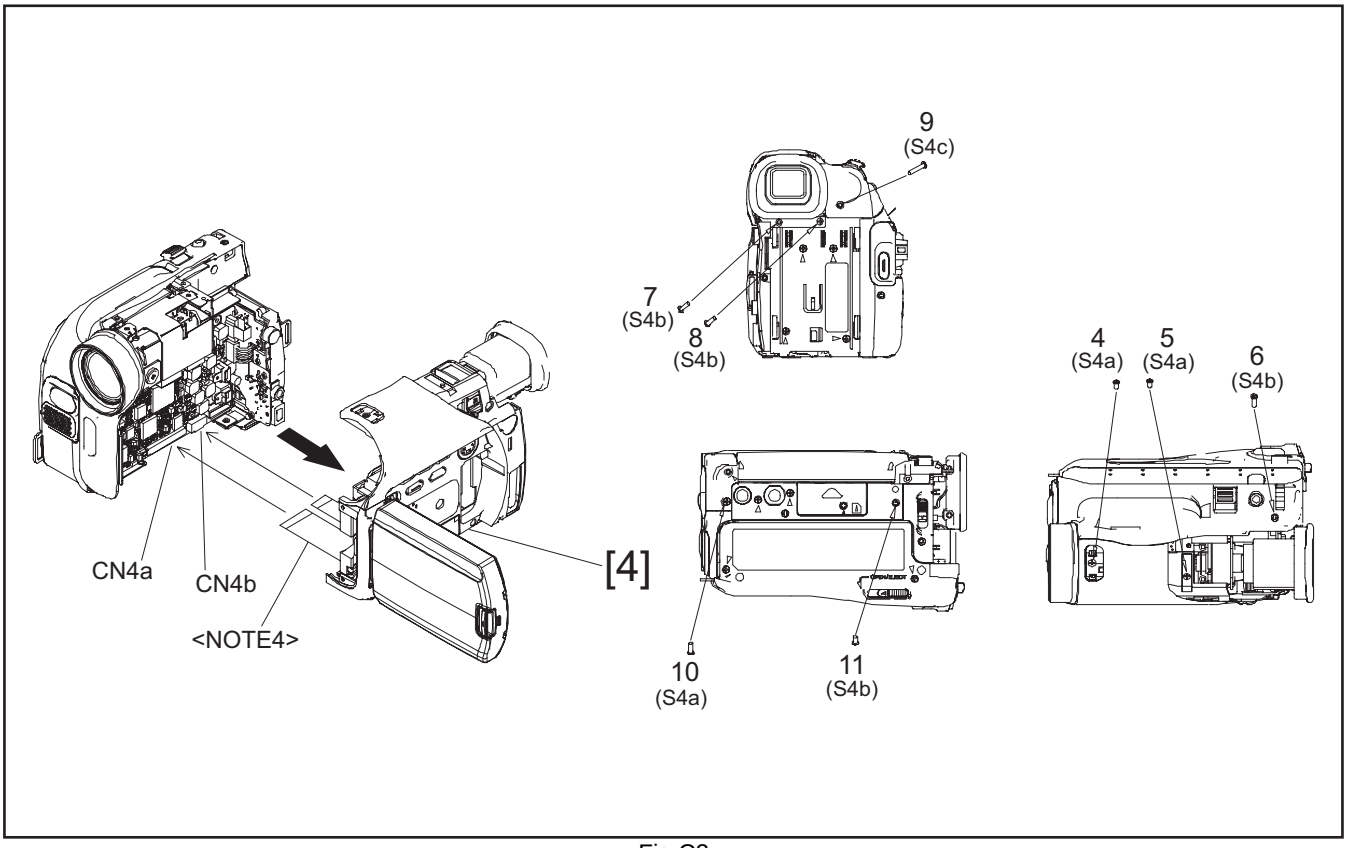
9
(S4c)
7
(S4b)
8
(S4b)
4
(S4a)
5
(S4a)
6
(S4b)
CN4a
CN4b
<NOTE4>
[4]
10
(S4a)
11
(S4b)

Fig.C2

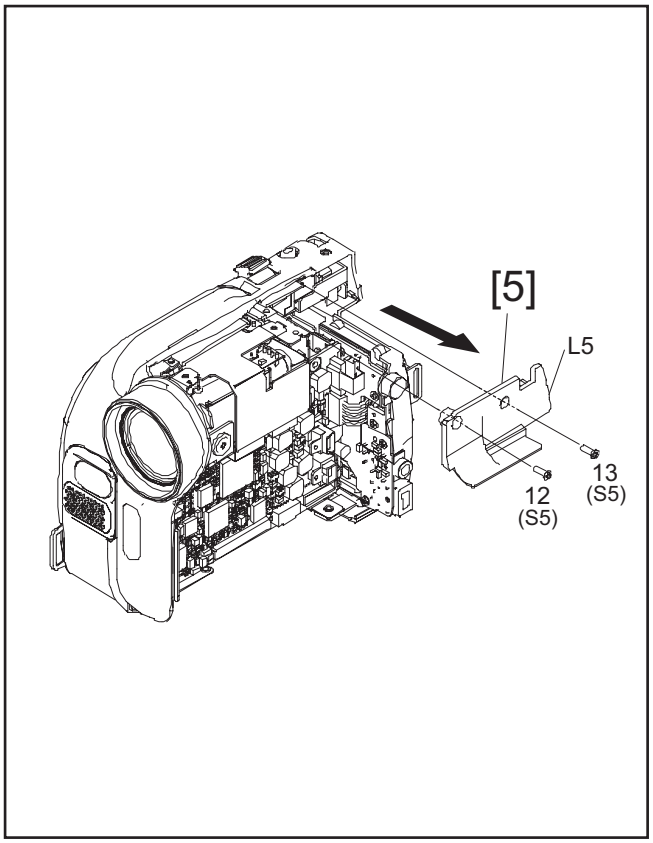

Fig.C3

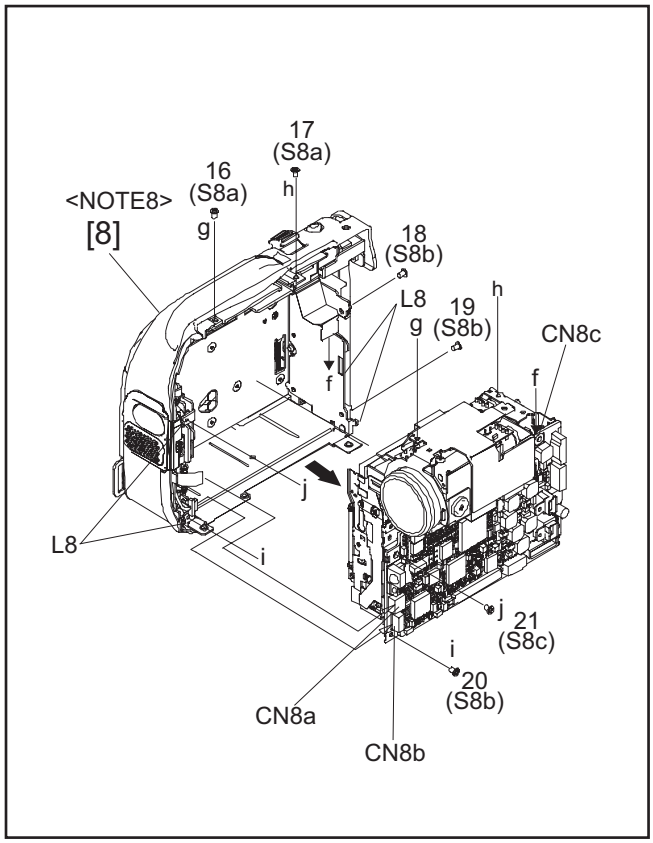

Fig.C5

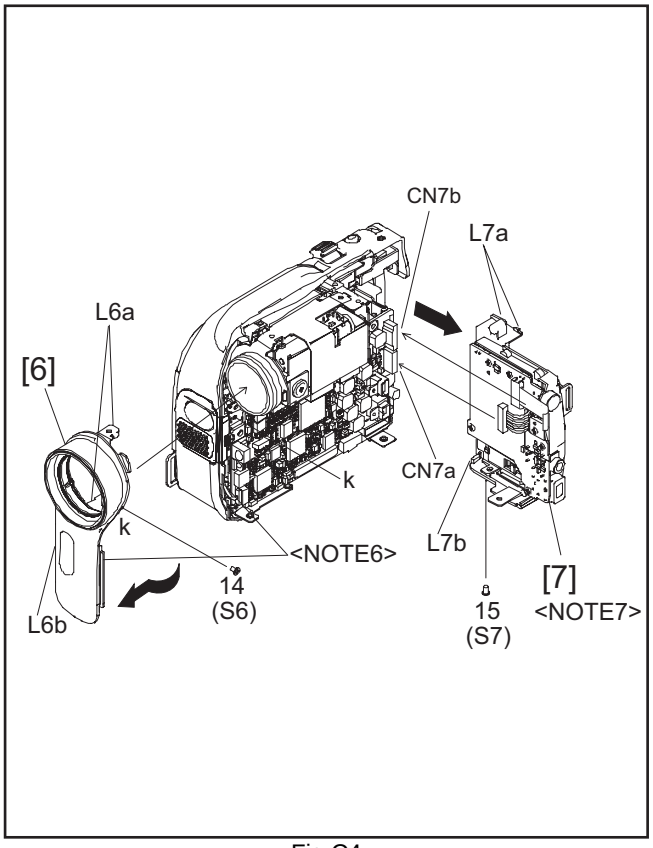

Fig.C4

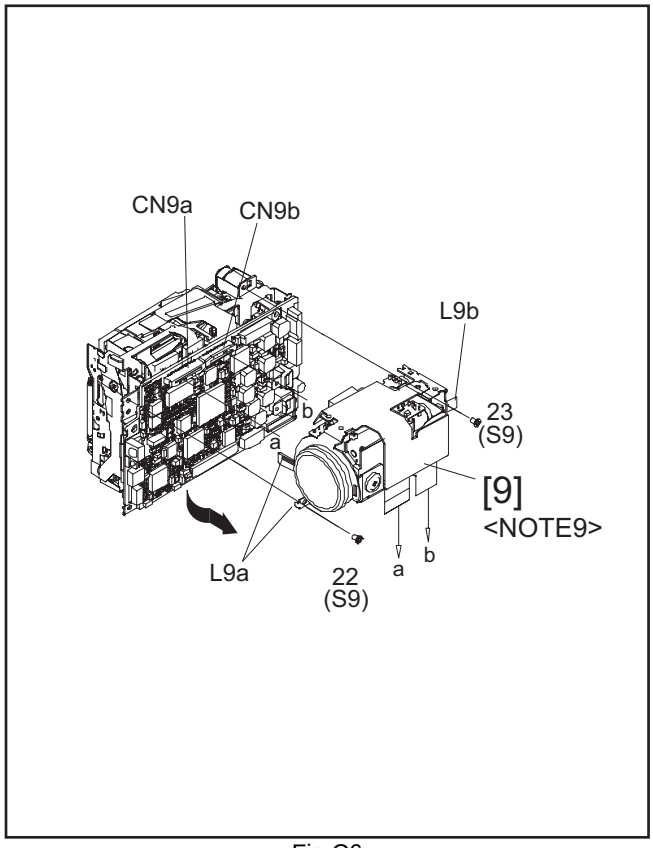

Fig.C6

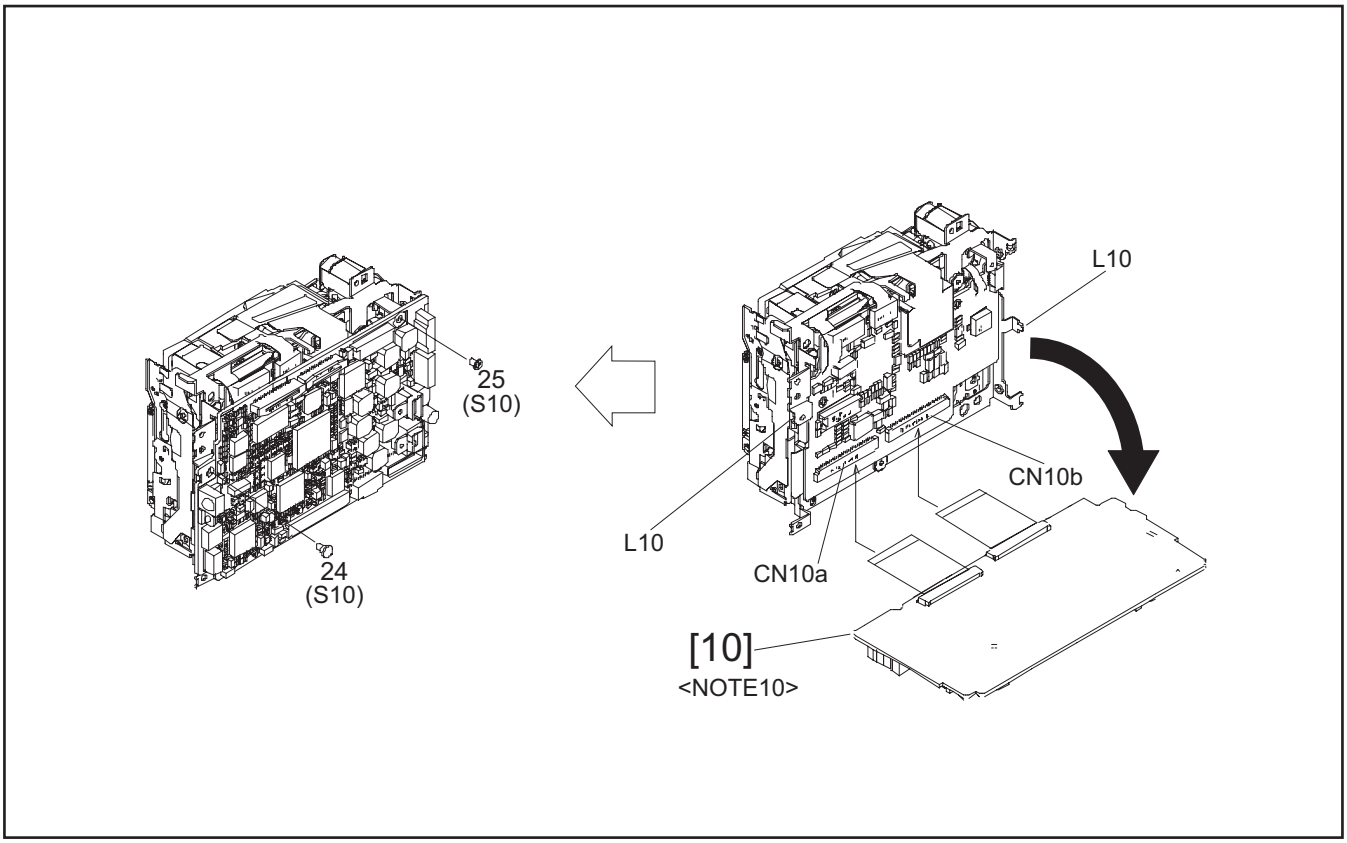
25
(S10)
24
(S10)
L10
CN10b
L10
CN10a
[10]
<NOTE10>

Fig.C7

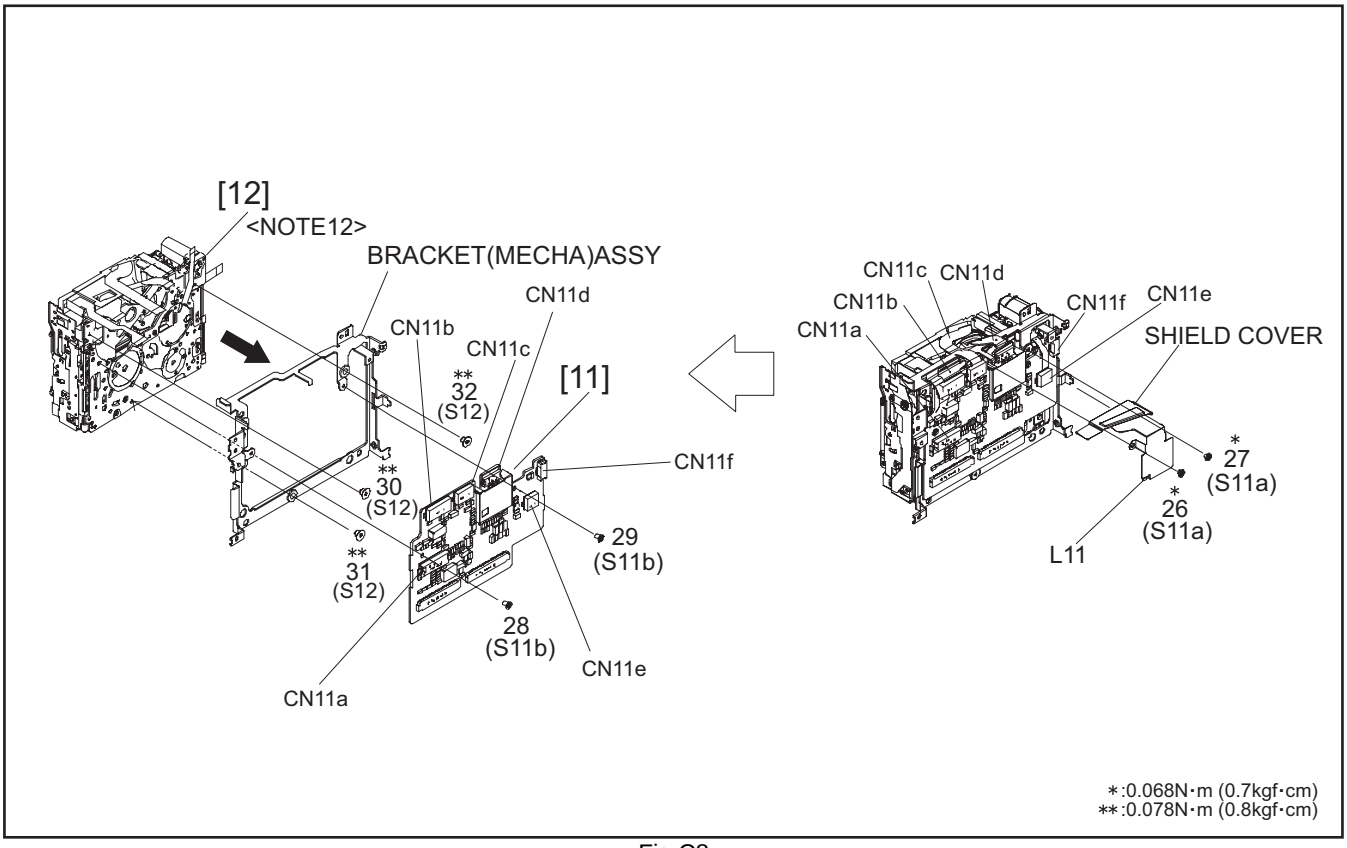
[12]
<NOTE12>
BRACKET(MECHA)ASSY
CN11d
CN11b
CN11c
** 32 (S12)
[11]
CN11f
** 30 (S12)
** 31 (S12)
29 (S11b)
28 (S11b)
CN11e
CN11a
CN11c
CN11d
CN11b
CN11a
CN11f
CN11e
SHIELD COVER
* 27 (S11a)
* 26 (S11a)
L11
*:0.068N·m (0.7kgf·cm)
**:0.078N·m (0.8kgf·cm)

Fig.C8

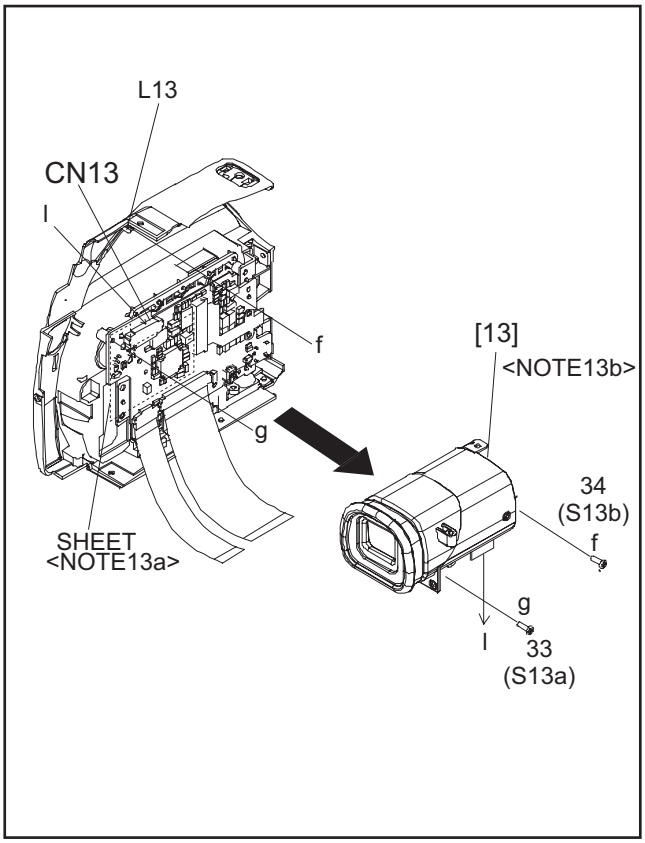

Fig.C9

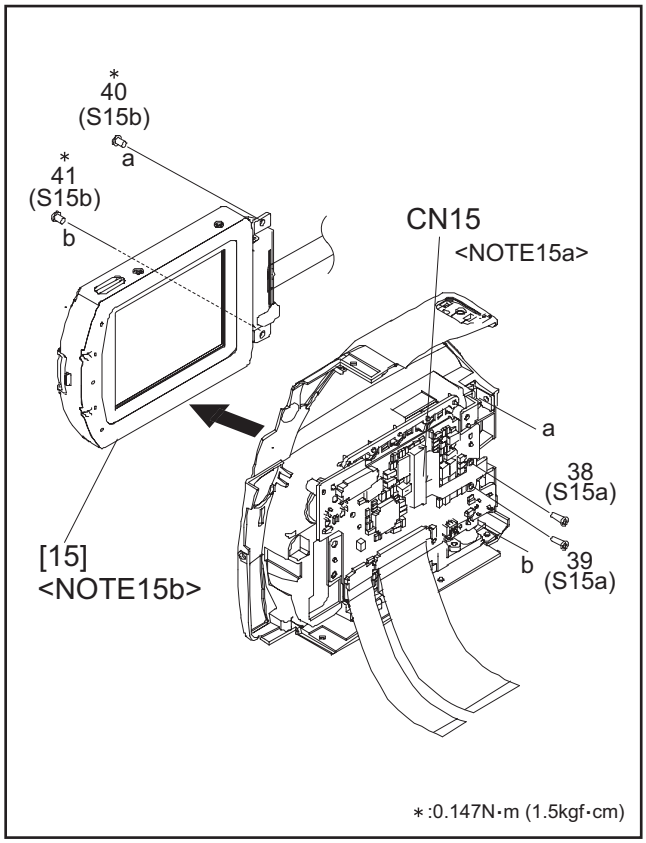

Fig.C11

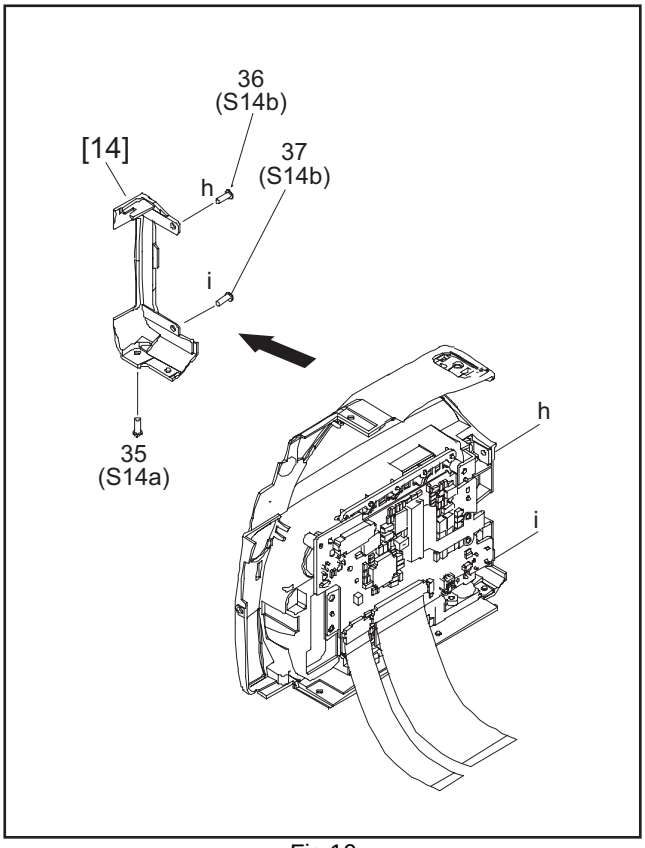

Fig.10

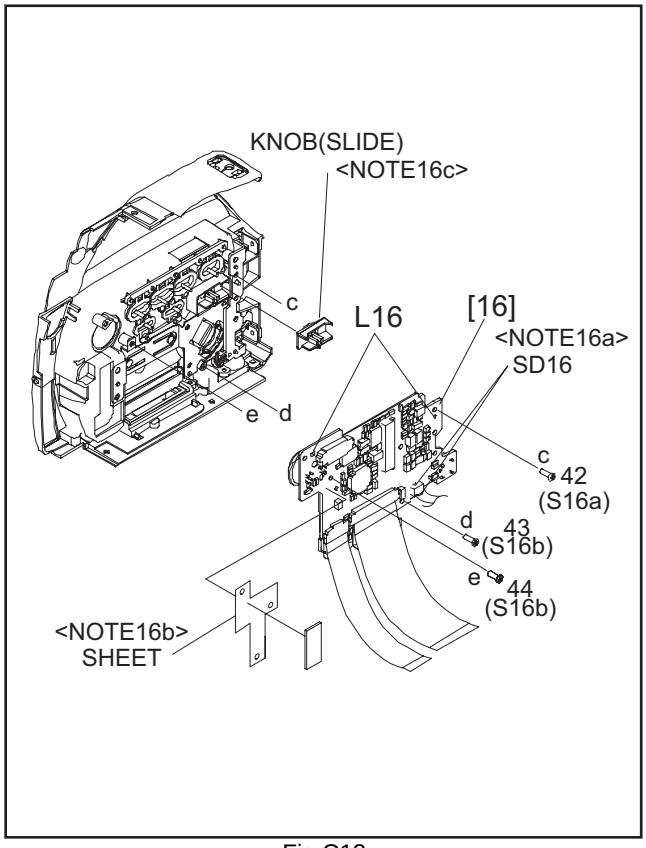

Fig.C12

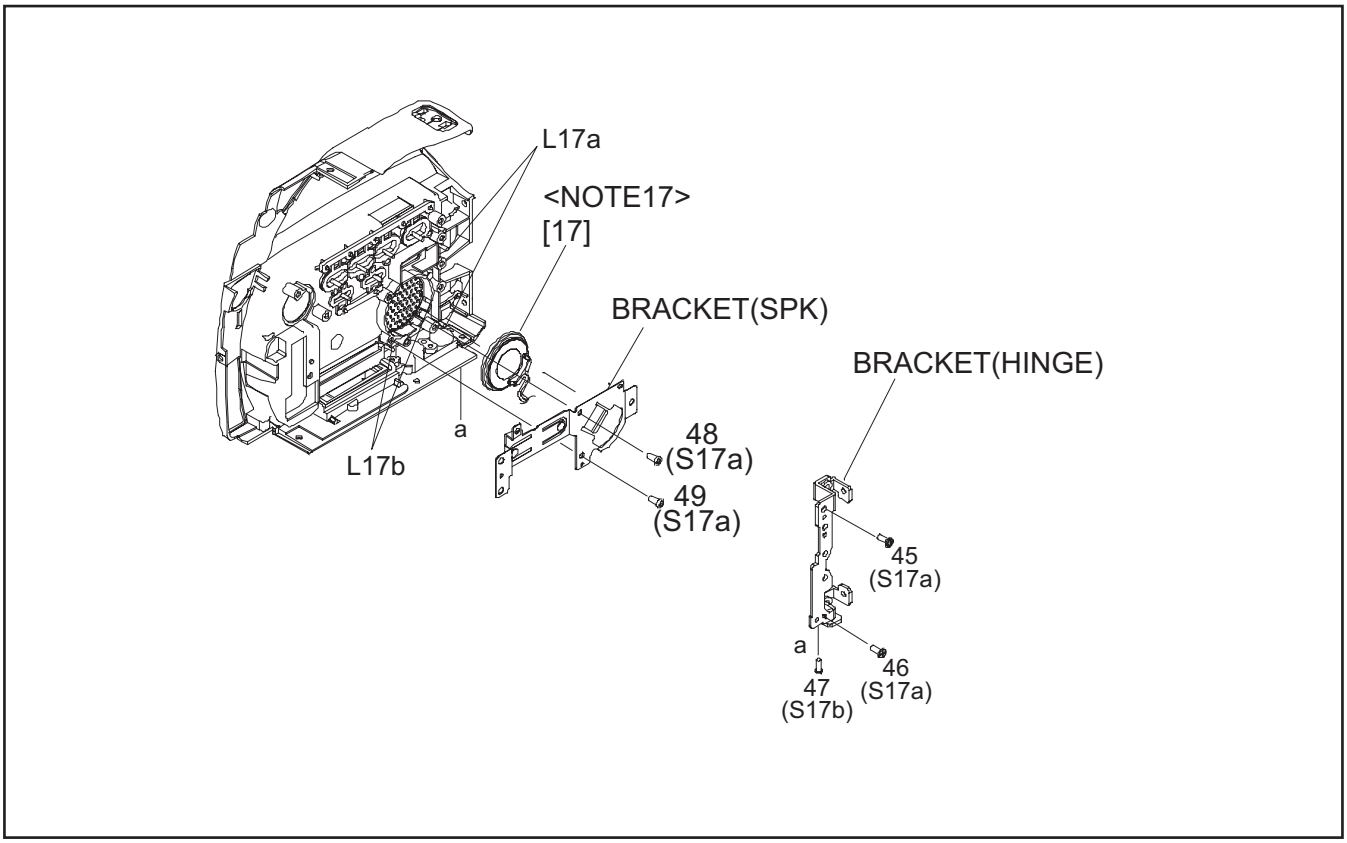
L17a
<NOTE17>
[17]
BRACKET(SPK)
BRACKET(HINGE)
a
L17b
48
(S17a)
49
(S17a)
45
(S17a)
a
47
(S17b)
46
(S17a)

Fig.13

3.2.3 DISASSEMBLY/ASSEMBLY OF [15] MONITOR ASSEMBLY

●CAUTION

(1) During the procedure, be careful in handling the LCD MODULE,etc., especially not to damage or soil the monitor screen. If it is soiled with fingerprints, etc., gently clean it with chamois or the cleaning cloth.

(2) Since the BACKLIGHT is soldered to the ASSEMBLY BOARD, the BACKLIGHT should not be separated from the ASSEMBLY BOARD except when replacing the BACKLIGHT.

●Disassembly procedure of MONITOR ASSEMBLY

(1) While removing the 4 screws (1-4) in numerical order and disengaging the 6 hooks (L15a-L15f) in alphabetical order, remove the MONITOR COVER ASSY.

(2) Remove the SENSOR BOARD ASSEMBLY from the MONITOR CASE.

(3) Remove the FPC in CN15a and CN15b in alphabetical order, and remove the MONITOR HINGE ASSEMBLY.

(4) Remove the FPC of LCD MODULE from 1 connector CN15c.

(5) Remove 1 screw (5), and remove the BL BOARD ASSEMBLY together with the BACKLIGHT.

(6) Remove the SHEET (DIFF.).

(7) Remove the LCD FRAME.

(8) Remove the LCD MODULE.

(9) Remove the SHIELD CASE.

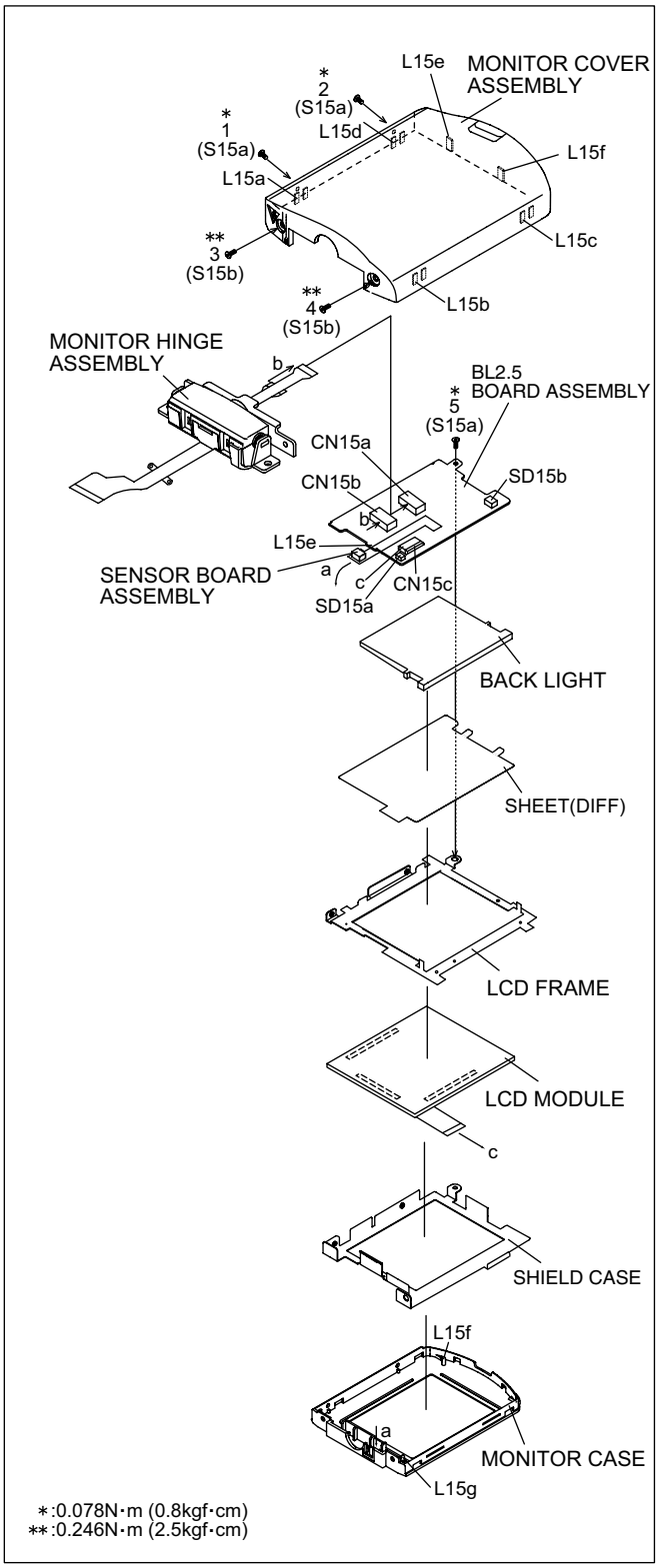

Fig.3-2-3

3.2.4 ASSEMBLY/DISASSEMBLY OF [9] OP BLOCK ASSMBLY/CCD BOARD ASSEMBLY

●CAUTIONS

(1) During the procedure, be careful in handling the CCD IMAGE SENSOR, the OP LPF, and the LENS etc., especially not to damage or soil their surface.
If it is soiled with fingerprints, etc., gently clean it with chamois or the cleaning cloth.

(2) When the unit is shipped from the factory, a protection seal is sometimes applied onto the transparent glass of the CCD IMAGE SENSOR. Leave the protection seal as it is, and take it off just before assembling the CCD IMAGE SENSOR to the OP BLOCK ASSEMBLY.

●Disassembly procedure of OP BLOCK ASSEMBLY/CCD BOARD ASSEMBLY

(1) Unsolder the 14 soldered points (SD9), and remove the CCD BOARD ASSEMBLY.

(2) Remove the 2 screws (1 and 2), and remove the CCD BASE ASSEMBLY.

NOTE 9a:

When removing the CCD BASE ASSEMBLY, be careful not to lose or damage the SPACER or the OP LPF because they may be removed together with the CCD IMAGE SENSOR.

NOTE 9b:

In replacing the CCD IMAGE SENSOR, don't remove the CCD IMAGE SENSOR from the CCD BASE ASSEMBLY. Instead, replace the whole CCD BASE ASSEMBLY.

●Assembly procedure of OP BLOCK ASSEMBLY/CCD BOARD ASSEMBLY

(1) Attach the OP LPF, the SHEET, and the SPACER to the OP BLOCK ASSEMBLY in this order.

(2) Attach the CCD BASE ASSEMBLY so that the spacer is not shifted, and tighten the CCD BASE ASSEMBLY with the 2 screws (1 and 2).

(3) Insert the CCD BOARD ASSEMBLY to the CCD BASE ASSEMBLY, and solder the 14 points (SD2).

●Replacement of service repair parts

Service repair parts of the OP BLOCK ASSEMBLY are as follows.

When replacing the parts, be careful not to cut or damage the FPC, and not to damage the parts due to soldering (overheat).

(1) Focus motor

(2) Zoom motor

(3) Iris motor unit

NOTE 9c:

To solder the FPC, lift the FPC approx.1mm away from the jack when replacing the FOCUS MOTOR or the ZOOM MOTOR.

NOTE 9d:

The IRIS MOTOR UNIT contains the FPC ASSEMBLY and the SENSOR ×2.

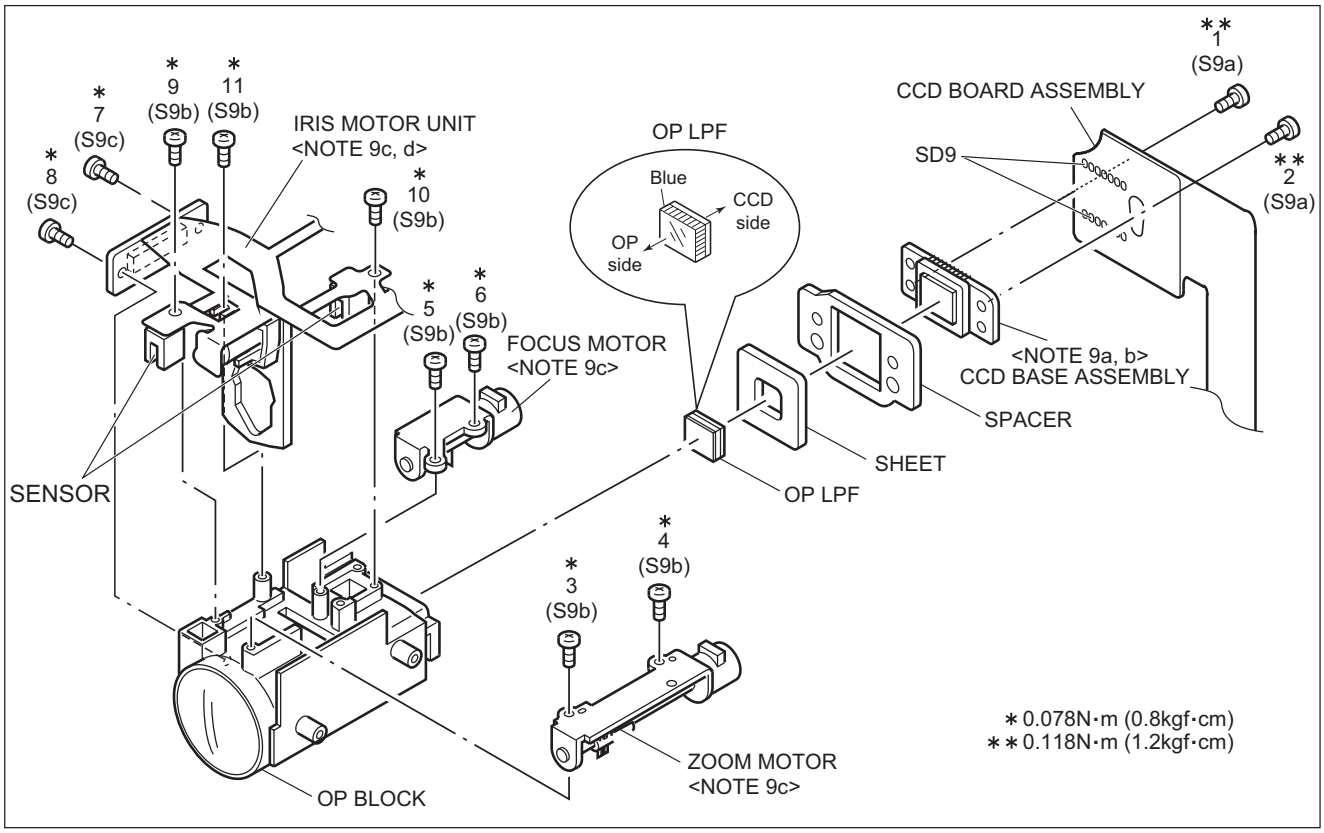

Fig.3-2-4

3.2.5 DISASSEMBLY/ASSEMBLY OF [13] VF ASSEMBLY

- When replacing the VF FPC ASSEMBLY, first remove the exterior parts of the VF ASSEMBLY (UPPER CASE(VF) and BOTTOM CASE(VF)). And then, remove the CONNECTOR from the BOARD ASSEMBLY. If you remove the CONNECTOR first, the FPC may be cut or the SWITCH may be damaged.

●Disassembly of VF ASSEMBLY

(1) Remove the 2 screws (1 and 2), and remove the EYE CUP.

(2) Remove the FPC attached to the BRACKET(VF).

(3) Remove the 3 screws (3-5). Pull the BRACKET(VF), and remove the 2 screws (6 and 7). Then, remove the BRACKET(VF) from the FPC.

NOTE13a:
During the procedure, be careful not to cut the FPC.

(4) Pull the UPPER CASE(VF)/BOTTOM CASE(VF) from the HOLDER(VF) from FPC side, and remove the UPPER CASE(VF)/BOTTOM CASE(VF).

(5) Remove the 4 screws (8-11), and remove the BOTTOM CASE(VF) so that the BOTTOM CASE(VF) is facing upward.

NOTE13b:
During the operation, be careful of the LEVER (LENS). Especially, during the attachment procedure, be careful of the attachment position so that there is nothing wrong with sliding operation of the LENS ASSEMBLY.

(6) Remove the GUIDE LENS/LENS ASSEMBLY and the LCD UNIT from the UPPER CASE(VF) if necessary.

●Disassembly of GUIDE LENS/LENS ASSEMBLY

(1) Remove the SHEET (LENS) from the GUIDE LENS(VF).

(2) Remove the LENS ASSEMBLY from the GUIDE LENS(VF).

NOTE13c:
During the procedure, be careful not to damage or soil the LENS.

NOTE13d:
Be careful not to lose the SPRING (LENS).

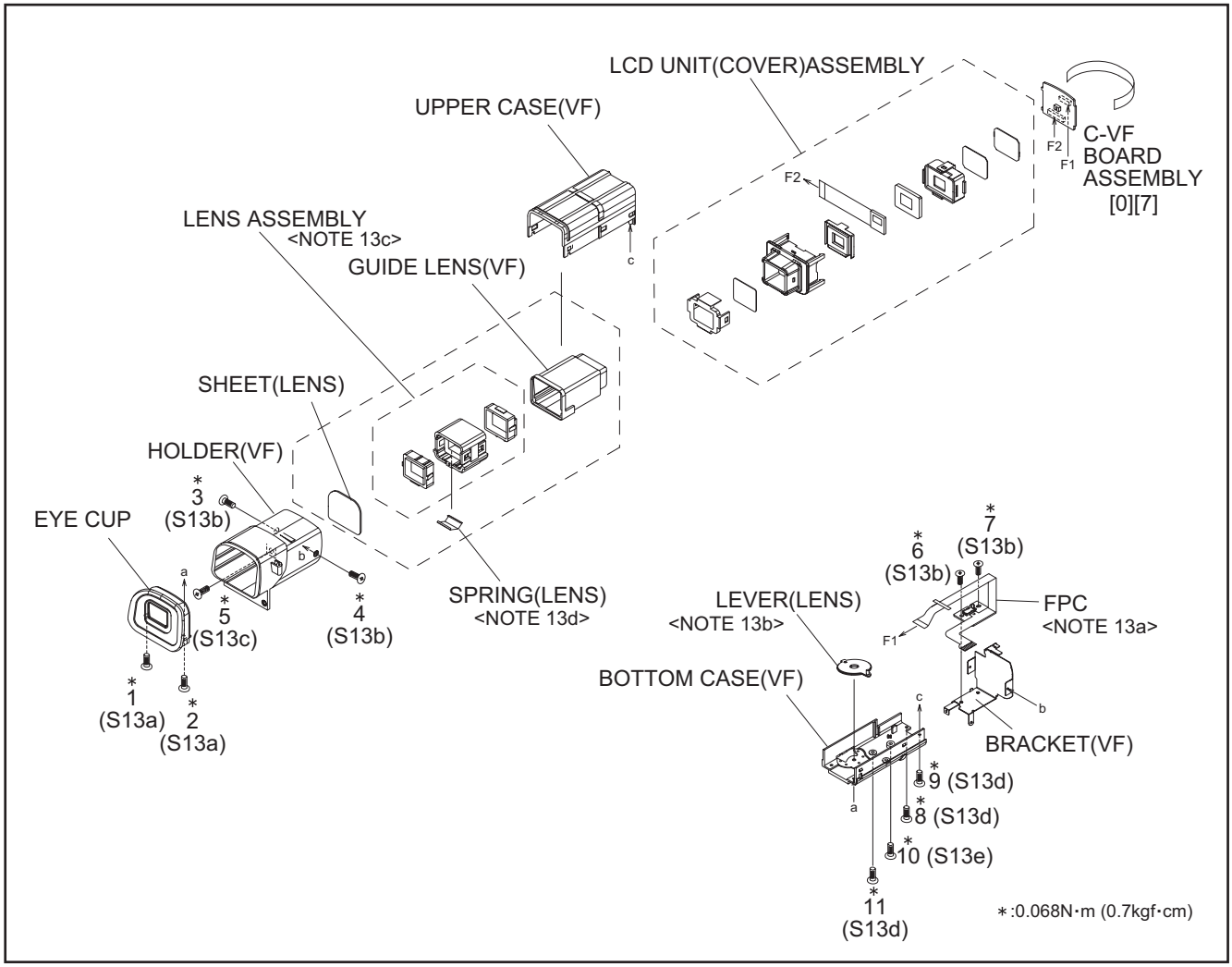

Fig.3-2-5

SECTION 4
ADJUSTMENT

4.1 PREPARATION

4.1.1 Precaution

Camera system and deck system of this model are specially adjusted by using PC.
However, if parts such as the following are replaced, an adjustment is required. The adjustment must be performed in a Service Center equipped with the concerned facilities.

- OP BLOCK ASSEMBLY
- EEP ROM (IC1005 of MAIN board)

In the event of malfunction with electrical circuits, first find a defective portion with the aid of proper test instruments as shown in the following electrical adjustment procedure, and then commence necessary repair/ replacement/adjustment.

- In observing chip TP, use IC clips, etc. to avoid any stress. Prior to replacement of chip parts (especially IC), remove the solder completely to prevent peeling of the pattern.
- Use a patch cord if necessary. As for a patch cord, see the BOARD INTERCONNECTIONS.
- Since connectors are fragile, carefully handle them in disconnecting and connecting the FPC.

4.1.2 REQUIRED TEST EQUIPMENT

- Personal computer (for Windows)
- Color TV monitor
- Oscilloscope (dual-trace type, observable 100MHz or higher frequency). The one observable 300 MHz or higher frequency is recommended.
- Digital voltmeter
- DC power supply or AC adapter
- Frequency counter (with threshold level adjuster)

4.1.3 TOOLS REQUIRED FOR ADJUSTMENT

Torque Driver YTU94088	Bit YTU94088-003	Tweezers P-895
Chip IC Replacement Jig PTS40844-2	Cleaning Cloth KSMM-01	Guide Driver (Hexagonal) D-770-1.27
INF Adjustment Lens YTU92001B	INF Adjustment Lens Holder YTU94087	Camera Stand YTU93079
Light box Assembly YTU93096A	Gray Scale Chart YTU94133A	Color Bar Chart YTU94133C
Alignment Tape MC-1	PC Cable QAM0099-002	Communication Cable YTU93107A
Service Support System YTU94057-77	Jig Connector Cable YTU93082C	

- **Torque driver**
  Be sure to use to fastening the mechanism and exterior parts because those parts must strictly be controlled for tightening torque.
- **Bit**
  This bit is slightly longer than those set in conventional torque drivers.
- **Tweezers**
  To be used for removing and installing parts and wires.
- **Chip IC replacement jig**
  To be used for adjustment of the camera system.
- **Cleaning cloth**
  Recommended the Cleaning cloth to wipe down the video heads, mechanism (tape transport system), optical lens surface.

- **Guide driver (Hexagonal)**
  To be used to turn the guide roller to adjustment of the linarity of playback envelope.
- **INF adjustment lens**
  To be used for adjustment of the camera system. For the usage of the INF adjustment lens, refer to the Service Bulletin No. YA-SB-10035.
- **INF lens holder**
  To be used together with the Camera stand for operating the Videocamera in the stripped-down condition such as the status without the exterior parts or for using commodities that are not yet conformable to the interchangeable ring. For the usage of the INF lens holder, refer to the Service Bulletin No. YA-SB-10035.
- **Camera stand**
  To be used together with the INF adjustment lens holder. For the usage of the Camera stand, refer to the Service Bulletin No. YA-SB-10035.
- **Light box assembly**
  To be used for adjustment of the camera system. For the usage of the Light box assembly, refer to the Service Bulletin No. YA-SB-10035.
- **Gray scale chart**
  To be used for adjustment of the camera system. For the usage of the INF adjustment lens, refer to the Service Bulletin No. YA-SB-10035.
- **Color bar chart**
  To be used for adjustment of the camera system. For the usage of the INF adjustment lens, refer to the Service Bulletin No. YA-SB-10035.
- **Alignment tape**
  To be used for check and adjustment of interchangeability of the mechanism.
- **PC cable**
  To be used to connect the Videocamera and a personal computer with each other when a personal computer issued for adjustment.
- **Communication cable**
  Connect the Communication cable between the PC cable and Jig connector cable when performing a PC adjustment.
- **Service support system**
  To be used for adjustment with a personal computer. Software can be downloaded also from JS-net.
- **Jig connector cable**
  Connected to JIG CONNECTOR of the main board and used for electrical adjustment, etc.

4.2 JIG CONNECTOR CABLE CONNECTION

NOTE:

In the case of jig connector cable use, since you cannot perform supply from DC jack, use a battery terminal.

■ Connection procedure

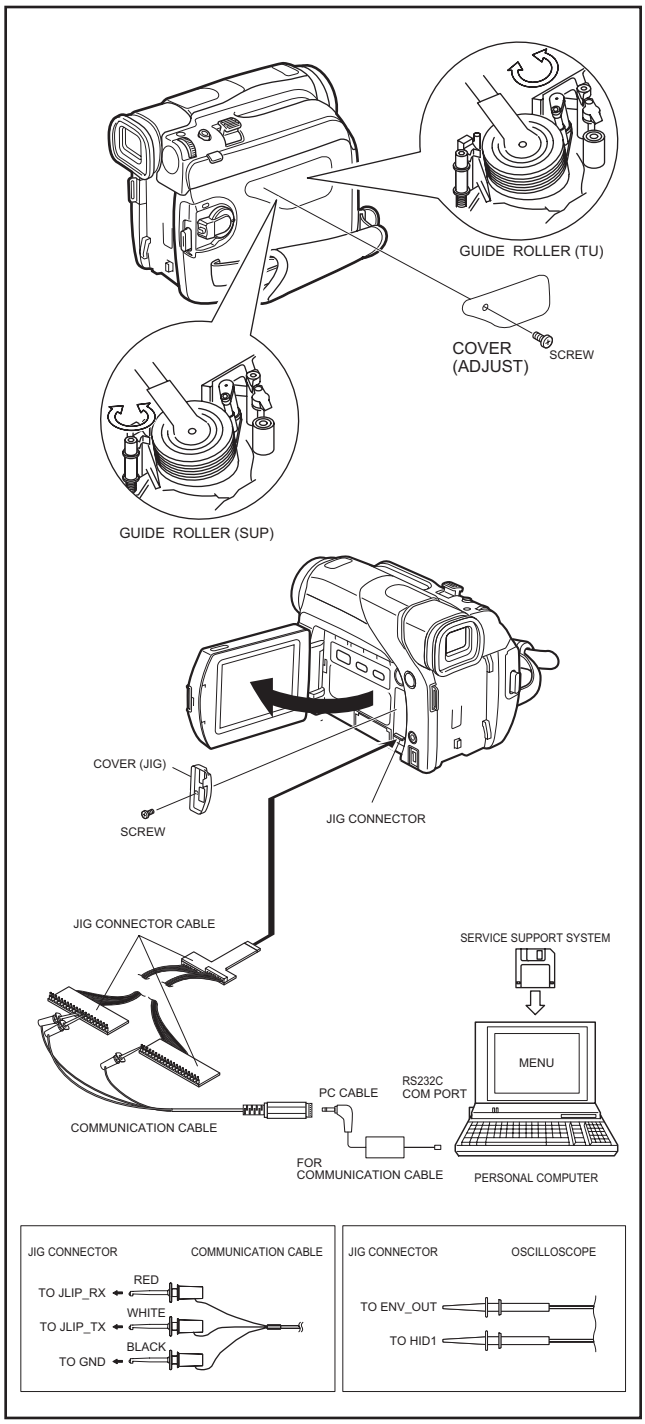

■ **Jig connector diagrams**

JIG CONNECTOR CABLE (YTU93082C)

MAIN CN105

AL_3VSYS	1		
RESET		16	
NC	2		
VCOM		17	
STH1	3		
CVF_R		18	
CVF_B	4		
V_OUT		19	
GND	5		
TXD2		20	
MON_G	6		
CVF_G		21	
RXD2	7		
MONI_CHG		22	
JLIP_RX	8		
GND		23	
JLIP_TX	9		
PB_CLK		24	
HID1	10		
GND		25	
ATFI	11		
ENV_OUT		26	
MAIN_VCO	12		
DISCRI		27	
I_MTR	13		
IF_TX		28	
FL_MDO	14		
FS_PLL		29	
MVD	15		
KENTO		30	

JIG BOARD ASSY (14PIN)

-	1
RESET	2
VCOM	3
STH1	4
CVF_R	5
CVF_B	6
V_OUT	7
GND	8
TXD2	9
MON_G	10
CVF_G	11
RXD2	12
MONI_CHG	13
HID1	14

JIG BOARD ASSY (15PIN)

JLIP_RX	1
GND	2
JLIP_TX	3
PB_CLK	4
GND	5
ATFI	6
ENV_OUT	7
MAIN_VCO	8
DISCRI	9
I_MTR	10
IF_TX	11
FL_MDO	12
FS_PLL	13
MVD	14
KENTO	15

4.3 MECHANISM COMPATIBILITY ADJUSTMENT

4.3.1 Tape pattern adjustment

NOTE:

Prior to the adjustment, remove the cover (ADJUST).

(1) Play back the compatibility adjustment tape.
(2) While triggering the HID1, observe the waveform of ENV_OUT.
(3) Set the manual tracking mode (ATF OFF).
(4) Confirm that the waveform is entirely parallel and straight, and free from remarkable level-down, through the tracking operation.
Make the confirmation as follows if necessary.
(5) If level-down is observed on the left hand side of the waveform, straighten the level by turning the GUIDE ROLLER (SUP).
If level-down is observed on the right hand side of the waveform, straighten the
level by turning the GUIDE ROLLER (TU).
(6) After the adjustment, try the unloading motion once, and confirm that the waveform is flat when the tape has been played back again.
(7) Play back the self-recording.
(8) Confirm that the waveform is flat.

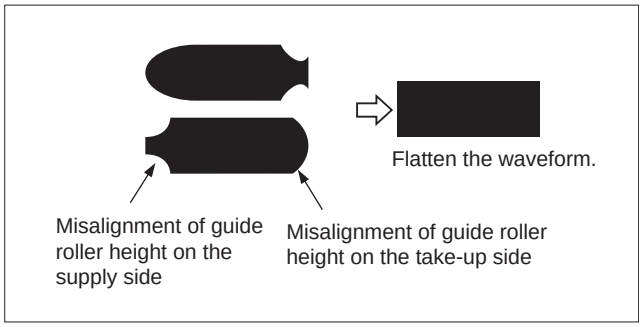

Fig.4-3-1

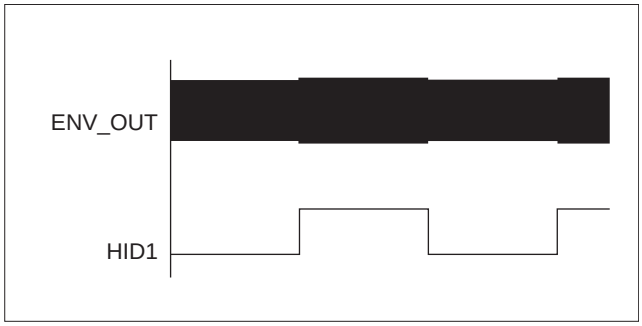

Fig.4-3-2

4.4 ELECTRICAL ADJUSTMENT

Electrical adjustment is performed by using a personal computer and software for SERVICE SUPPORT SYSTEM. Read README.TXT file to use the software properly.
As for the connection of cables, see "4.2 JIG CONNECTOR CABLE CONNECTION".

5.1 SERVICE NOTE

CABINET PARTS AND ELECTRICAL PARTS

Symbol No.	[1]	[2]	[3]		[4]								[5]		[6]	[7]	[8]						[9]		[10]	
Removing order of screw	-	1	2	3	4	5	6	7	8	9	10	11	12	13	14	15	16	17	18	19	20	21	22	23	24	25
Place to stick screw	-															*			*	*	*	*				
Reference drawing (Fig.No.)	C1				C2								C3		C4		C5						C6		C7	
Screw tightening torque	I																									

CABINET PARTS AND ELECTRICAL PARTS

Symbol No.	[11]				[12]			[13]		[14]			[15]				[16]			[17]				
Removing order of screw	26	27	28	29	30	31	32	33	34	35	36	37	38	39	40	41	42	43	44	45	46	47	48	49
Place to stick screw															*	*								
Reference drawing (Fig.No.)	C8							C9		C10			C11				C12			C13				
Screw tightening torque	II		I		III			I							IV		I							

VF ASSEMBLY

	[13]										
Removing order of screw	1	2	3	4	5	6	7	8	9	10	11
Place to stick screw						*	*				
Reference drawing (Fig.No.)	3-2-5										
Screw tightening torque	II										

MONITOR ASSEMBLY

	[15]				
Removing order of screw	1	2	3	4	5
Place to stick screw	*	*			
Reference drawing (Fig.No.)	3-2-3				
Screw tightening torque	III		V		III

OP BLOCK ASSEMBLY

	[9]										
Removing order of screw	1	2	3	4	5	6	7	8	9	10	11
Place to stick screw											
Reference drawing (Fig.No.)	3-2-4										
Screw tightening torque	VI		III								

NOTE:

1) * : Don't reuse the screw, because screw lock bond was applied to them.
2) Pay careful attention to tightening torque for each screw.

I : 0.088N•m (0.9kgf•cm) II : 0.068N•m (0.7kgf•cm) III : 0.078N•m (0.8kgf•cm)
IV : 0.147N•m (1.5kgf•cm) V : 0.246N•m (2.5kgf•cm) VI : 0.118N•m (1.2kgf•cm)

5.2 TAKE OUT CASSETTE TAPE

(1) Remove the Power Unit (battery or DC code) from the set.
(2) Remove 1 screw, and remove a plate (ADJ).

NOTE:
For more efficient operation, loosen and move the grip belt prior to the procedure (2).

(3) Open the CASSETTE COVER till it is completely opened and fixed.
(4) Attach a PVC tape as shown in the figure.

NOTE:
Be careful of cassette tape damage caused because the CASSETTE HOUSING ASSEMBLY is moved upward at the unloading end (EJECT mode).

(5) To set the SLIDE DECK ASSEMBLY to the unloading end, apply DC 3V to the electrode (terminal) on the top surface of the LOADING MOTOR ASSEMBLY that is seen through a hole under the plate removed in the procedure (2).

NOTE:
Be careful not to attach grease or a similar substance to the surface of the cassette tape on the tape transport system.

(6) Wind the cassette tape by directly turning the REEL DISK ASSEMBLY (SUP) from the backside of the SLIDE DECK ASSEMBLY by using a sharp tool (Chip IC replacement tool).
(7) Confirm that the cassette tape is completely wound, and then peel off the PVC tape from the CASSETTE HOUSING ASSEMBLY and take out the cassette tape.

NOTE:
To confirm that the cassette tape is completely wound, confirm that one REEL DISK ASSEMBLY (TU) rotates as you rotate the other REEL DISK ASSEMBLY (SUP).

(8) Make sure that grease or a similar substance is not attached to the surface of the tape taken out in the procedure (7). Similarly, also make sure that grease or a similar substance is not attached on the MECHANISM ASSEMBLY, especially the tape transport system.

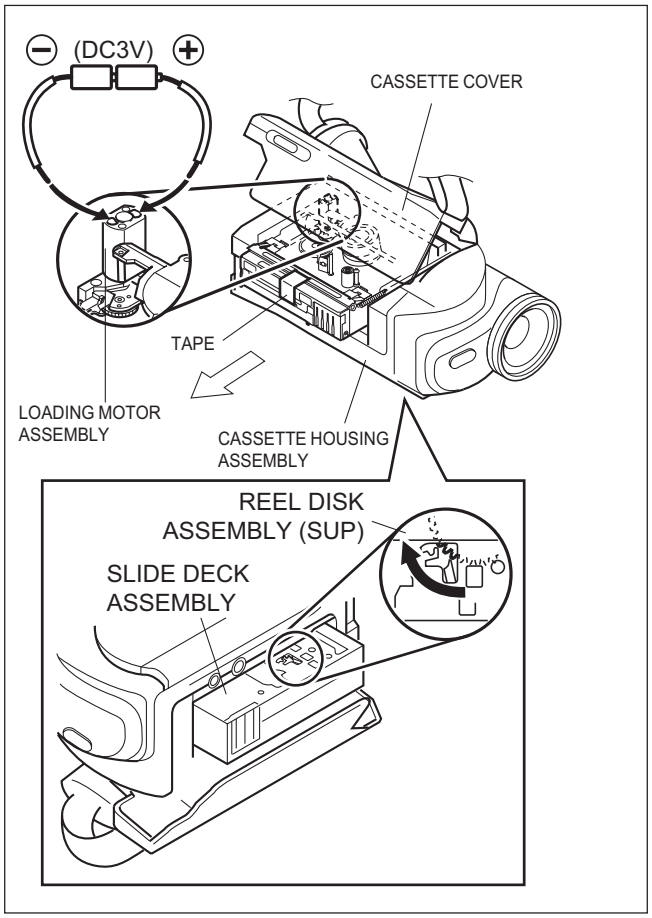

Fig.5-2-1

5.3 EMERGENCY DISPLAY

Whenever some abnormal signal is input to the syscon CPU, an error number (E01, as an example) is displayed on the LCD monitor or (in the electronic view finder).In every error status, such the message as shown below alter nately appear over and over.

- In an emergency mode, all operations except turning on/off the POWER switch are ineffectual.

Example (in case of the error number E01):

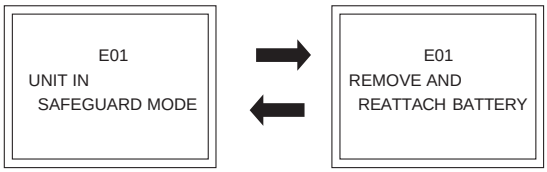

LCD display	Emergencymode	Details	Possible cause
E01	LOADING	In the case the encoder position is not shifted to the next point though the loading motor has rotated in the loading direction for 4 seconds or more. This error is defined as [E01].	1. The mechanism is locked during mode shift. 2. The mechanism is locked at the mechanism loading end, because the encoder position is skipped during mechanism mode shift. 3. No power is supplied to the loading MDA.
E02	UNLOADING	In the case the encoder position is not shifted to the next point though the loading motor has rotated in the unloading direction for 4 seconds or more. This error is defined as [E02].	1. The mechanism is locked during mode shift. 2. The mechanism is locked at the mechanism loading end, because the encoder position is skipped during mechanism mode shift.
E03	TU & SUP REEL FG	In the case no REEL FG is produced for seconds shown in the table below or more in the capstan rotation mode after loading was complete, the mechanism mode is shifted to STOP with the pinch roller set off. This error is defined as [E03].However, no REEL EMG is detected in the SLW/STILL mode. (REEL(SUP) / REEL(TU)) PB/REC: 3 SEC / 3 SEC S-FWD: 3 SEC / 0.3 SEC S-REW: 0.3 SEC / 3 SEC FF: 3 SEC / 0.1 SEC REW: 0.1 SEC / 3 SEC	1. The idler gear does not engage with the reel disk well. 2. Though the idler gear and reel disk are engaged with each other, the tape is not wound because of overload to the mechanism. 3. No FG pulse is output from the reel sensor. 4. No power is supplied to the reel sensor. 5. Tape transport operation takes place with a cassette having no tape inside. 6. The tape slackens and no pulse is produced until the slack is taken up and the tape comes into the normal status.
E04	DRUM FG	In the case there is no DRUM FG input in the drum rotation mode for 4 seconds or more. This error is defined as [E04], and the mechanism mode is shifted to STOP with the pinch roller set off.	1. The drum cannot be started or drum rotation is stopped because tape transport load is too high. 1) Tape tension is extremely high. 2) The tape is damaged or soiled with grease, etc. 2. The DRUM FG signal is not received by the syscon CPU. 1) Disconnection in the middle of the signal line. 2) Failure of the DRUM FG pulse generator (hall element). 3. No drum control voltage is supplied to the MDA. 4. No power is supplied to the DRUM MDA.
E05	-	-	-
E06	CAPSTAN FG	In the case no CAPSTAN FG is produced in the capstan rotation mode for 2 seconds or more. This error is defined as [E06], and the mechanism mode is shifted to STOP with the pinch roller set off.However, no CAPSTAN EMG is detected in the STILL/FF/REW mode.	1. The CAPSTAN FG signal is not received by the syscon CPU. 1) Disconnection in the middle of the signal line. 2) Failure of the CAPSTAN FG pulse generator (MR element). 2. No capstan control voltage is supplied to the MDA. 3. The capstan cannot be started or capstan rotation is stopped because tape transport load is too high. 1) Tape tension is extremely high. (Mechanical locking) 2) The tape is damaged or soiled with grease, etc. (Tape tangling occurs, etc.)

Fig.5-3-1

JVC SERVICE & ENGINEERING COMPANY OF AMERICA

DIVISION OF JVC AMERICAS CORP.

www.jvcservice.com(US Only)

JVC CANADA INC.

Head office : 21 Finchdene Square Scarborough, Ontario M1X 1A7 (416)293-1311

JVC®

(No.YF020)

Printed in Japan
WPC