RENAULT

1 Engine and peripherals

10A ENGINE AND CYLINDER BLOCK ASSEMBLY

11A TOP AND FRONT OF ENGINE

12A FUEL MIXTURE

12B TURBOCHARGING

13A FUEL SUPPLY

13B DIESEL INJECTION

13C PREHEATING

14A ANTIPOLLUTION

16A STARTING - CHARGING

17A IGNITION

17B PETROL INJECTION

X95, and F4R or F9Q or K4M or K9K

JUNE 2008 **Edition Anglaise**

"The repair methods given by the manufacturer in this document are based on the technical specifications current when it was prepared.

The methods may be modified as a result of changes introduced by the manufacturer in the production of the various component units and accessories from which his vehicles are constructed."

All copyrights reserved by Renault.

The reproduction or translation in part of whole of the present document, as well as the use of the spare parts reference numbering system, are prohibited without the prior written consent of Renault.

© Renault s.a.s 2008

19A COOLING

19B EXHAUST

19C TANK

19D ENGINE MOUNTING

X95, and F4R or F9Q or K4M or K9K

JUNE 2008 **Edition Anglaise**

"The repair methods given by the manufacturer in this document are based on the technical specifications current when it was prepared.

The methods may be modified as a result of changes introduced by the manufacturer in the production of the various component units and accessories from which his vehicles are constructed."

All copyrights reserved by Renault.

The reproduction or translation in part of whole of the present document, as well as the use of the spare parts reference numbering system, are prohibited without the prior written consent of Renault.

© Renault s.a.s 2008

MEGANE III - Section 1

Contents

Page

10A ENGINE AND CYLINDER BLOCK ASSEMBLY

Crankshaft seal at timing end Removal - Refitting 10A-1

Crankshaft seal at gearbox end : Removal - Refitting 10A-12

Sump: Removal - Refitting 10A-25

Engine oil: Draining - Refilling 10A-40

Oil filter: Removal - Refitting 10A-48

Exchanger: Removal - Refitting 10A-55

Oil pressure sensor: Removal - Refitting 10A-64

Oil level sensor: Removal - Refitting 10A-69

Oil pump: Removal - Refitting 10A-76

Oil pressure: Check 10A-82

Multifunction support: Removal - Refitting 10A-84

Engine/gearbox assembly: Removal - Refitting 10A-98

Flywheel: Removal - Refitting 10A-157

11A TOP AND FRONT OF ENGINE

Final compression pressure: Check 11A-1

Accessories belt: Removal - Refitting 11A-7

Crankshaft accessories pulley: Removal - Refitting 11A-15

11A TOP AND FRONT OF ENGINE

Timing belt: Removal - Refitting 11A-29

Rocker cover: Removal - Refitting 11A-88

Camshaft: Removal - Refitting 11A-114

Cylinder head: Removal - Refitting 11A-135

Camshaft dephaser: Removal - Refitting 11A-177

Camshaft dephaser solenoid valve: Removal - Refitting 11A-184

Camshaft seal at timing end: Removal - Refitting 11A-186

Oil decanter: Removal - Refitting 11A-205

12A FUEL MIXTURE

Air resonator: Removal - Refitting 12A-1

Air filter: Removal - Refitting 12A-2

Air filter unit: Removal - Refitting 12A-4

Air flowmeter: Removal - Refitting 12A-7

Air inlet flap: Removal - Refitting 12A-11

Throttle valve: Removal - Refitting 12A-17

Throttle valve: Cleaning 12A-21

Contents

12A FUEL MIXTURE

Inlet manifold: Removal - Refitting 12A-23

Injector holder shim: Removal - Refitting 12A-31

Exhaust manifold - Intake distributor: Removal - Refitting 12A-34

Exhaust manifold: Removal - Refitting 12A-37

12B TURBOCHARGING

Turbocharging: Precautions for repair 12B-1

Turbocharger: Removal - Refitting 12B-8

Turbocharger oil pipe: Removal - Refitting 12B-22

Intercooler: Removal - Refitting 12B-37

Intercooler air inlet pipe: Removal - Refitting 12B-41

Turbocharger outlet exhaust gas duct: Removal - Refitting 12B-49

Intercooler air outlet pipe: Removal - Refitting 12B-56

13A FUEL SUPPLY

Manual priming pump: Removal - Refitting 13A-1

Fuel filter: Removal - Refitting 13A-3

Fuel pressure: check 13A-7

Fuel flow: check 13A-10

13B DIESEL INJECTION

Diesel injection: Precautions for repair 13B-1

Diesel injection: List and location of components 13B-12

Diesel injection computer: Removal - Refitting 13B-17

Camshaft position sensor: Removal - Refitting 13B-19

Crankshaft position sensor: Removal - Refitting 13B-25

Leak flow from high-pressure pump: Check 13B-27

High pressure pump: Removal - Refitting 13B-30

Fuel flow actuator: Removal - Refitting 13B-54

Venturi: Removal - Refitting 13B-58

Diesel return pipe: Removal - Refitting 13B-62

Diesel injector fuel return rail: Removal - Refitting 13B-63

Injector rail protector: Removal - Refitting 13B-70

High-pressure pipe between the pump and rail: Removal - Refitting 13B-71

High-pressure pipe between the rail and injector: Removal - Refitting 13B-87

Injector rail: Removal - Refitting 13B-108

Rail pressure sensor: Removal - Refitting 13B-117

Fuel temperature sensor: Removal - Refitting 13B-118

Leak flow from injectors: Check 13B-126

Contents

13B DIESEL INJECTION

Diesel injector: Removal - Refitting 13B-136

Accelerometer: Removal - Refitting 13B-150

13C PREHEATING

Pre/postheating unit: Removal - Refitting 13C-1

Heater plugs Removal - Refitting 13C-3

14A ANTIPOLLUTION

Fuel vapour canister: Removal - Refitting 14A-1

Exhaust gas recirculation solenoid valve: Removal - Refitting 14A-3

Intercooler: Removal - Refitting 14A-7

Exhaust gas recirculation assembly: Removal - Refitting 14A-18

Exhaust gas recirculation rigid pipe: Removal - Refitting 14A-30

16A STARTING - CHARGING

Alternator: Removal - Refitting 16A-1

Starter: Removal - Refitting 16A-16

17A IGNITION

Coils Removal - Refitting 17A-1

Spark plugs: Removal - Refitting 17A-5

17B PETROL INJECTION

Oxygen sensors: Removal - Refitting 17B-1

Petrol injection computer: Removal - Refitting 17B-7

Pinking sensor: Removal - Refitting 17B-9

Camshaft position sensor: Removal - Refitting 17B-13

Crankshaft position sensor: Removal - Refitting 17B-15

Injector rail - Injectors: Removal - Refitting 17B-19

19A COOLING

Engine cooling circuit: Specifications 19A-1

Engine cooling circuit: check 19A-2

Engine cooling circuit: List and location of components 19A-4

Cooling circuit: Draining - Refilling 19A-17

Cooling radiator: Removal - Refitting 19A-31

Water pump: Removal - Refitting 19A-45

Thermostat: Removal - Refitting 19A-57

Plenum chamber: Removal - Refitting 19A-61

Engine cooling fan assembly: Removal - Refitting 19A-73

Contents

19A COOLING

Water pump inlet pipe: Removal - Refitting 19A-83

Expansion bottle: Removal - Refitting 19A-96

Electric water pump: Removal - Refitting 19A-99

Coolant temperature sensor: Removal - Refitting 19A-101

19B EXHAUST

Exhaust: Parts and consumables for the repair work 19B-1

Exhaust: Precautions for repair 19B-12

Catalytic converter: Removal - Refitting 19B-17

Expansion chamber: Removal - Refitting 19B-31

Connector pipe: Removal - Refitting 19B-35

Silencer: Removal - Refitting 19B-40

Particle filter: Removal - Refitting 19B-47

Exhaust gas temperature sensor: Removal - Refitting 19B-50

Particle filter pressure sensor: Removal - Refitting 19B-52

Particle filter temperature sensors: Removal - Refitting 19B-53

Exhaust fuel injector: Removal - Refitting 19B-54

Exhaust fuel injector solenoid valve: Removal - Refitting 19B-56

Exhaust fuel injector cooler: Removal - Refitting 19B-58

Connecting hose: Removal - Refitting 19B-60

19C TANK

Fuel tank: Draining 19C-1

Fuel tank: Removal - Refitting 19C-4

Filler neck: Removal - Refitting 19C-14

Fuel level sensor module: Removal - Refitting 19C-16

19D ENGINE MOUNTING

Left-hand suspended engine mounting: Removal - Refitting 19D-1

Right-hand suspended engine mounting: Removal - Refitting 19D-18

Lower engine tie-bar: Removal - Refitting 19D-33

K4M

Essential special tooling	
Mot. 1385	Crankshaft oil seal fitting tool (timing end) (35 x 47 x 7)

REMOVAL

I - REMOVAL PREPARATION OPERATION

❏ Position the vehicle on a two-post lift (see **Vehicle: Towing and lifting**) (02A, Lifting equipment).

❏ Disconnect the battery (see **Battery: Removal - Refitting**) (80A, Battery).

❏ Remove:

- the engine cover,
- the throttle valve (see **12A**, **Fuel mixture**, **Throttle valve: Removal - Refitting**, page **12A-17**) ,
- the windscreen wiper arms (see **Windscreen wiper arm: Removal - Refitting**) (85A, Wiping - Washing),
- the scuttle panel grille (see **Scuttle panel grille: Removal - Refitting**) (56A, Exterior equipment),
- the scoop under the scuttle panel grille (see **Scoop under scuttle panel grille: Removal - Refitting**) (56A, Exterior equipment),
- the front right-hand wheel (see **Wheel: Removal - Refitting**) (35A, Wheels and tyres),
- the front section of the front right-hand wheel arch liner (see **Front wheel arch liner: Removal - Refitting**) (55A, Exterior protection),
- the engine undertray bolts,
- the engine undertray,
- the lower engine tie-bar (see **19D**, **Engine mounting**, **Lower engine tie-bar: Removal - Refitting**, page **19D-33**) ,
- the accessories belt (see **11A**, **Top and front of engine**, **Accessories belt: Removal - Refitting**, page **11A-7**) ,
- the crankshaft accessories pulley (see **11A**, **Top and front of engine**, **Crankshaft accessories pulley: Removal - Refitting**, page **11A-15**) ,
- the right-hand suspended engine mounting (see **19D**, **Engine mounting**, **Right-hand suspended engine mounting: Removal - Refitting**, page **19D-18**) ,
- the timing belt (see **11A**, **Top and front of engine**, **Timing belt: Removal - Refitting**, page **11A-29**) ,
- the crankshaft timing sprocket.

II - OPERATION FOR REMOVAL OF PART CONCERNED

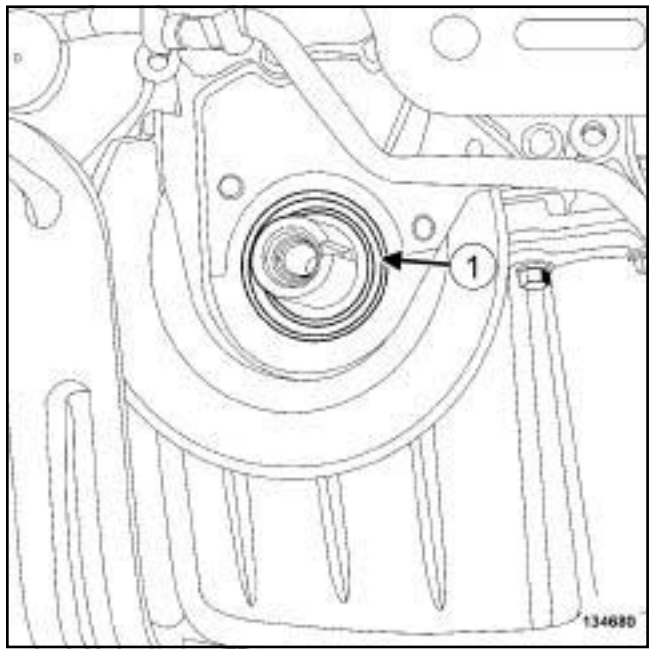

134680

❏ Remove the crankshaft seal (**1**) at the timing end.

REFITTING

I - REFITTING PREPARATION OPERATION

❏ **parts always to be replaced: Crankshaft seal on timing end (10,03,03,04)**.

❏ Use **SURFACE CLEANER** (see **Vehicle: Parts and ingredients for the repairwork**) (04B, Consumables - Products) to clean and degrease:

- the seal mating face on the crankshaft,
- the seal housing on the cylinder block.

WARNING

To ensure proper sealing, the gasket surfaces must be clean, dry and not greasy (avoid any finger marks).

K4M

II - REFITTING OPERATION FOR PART CONCERNED

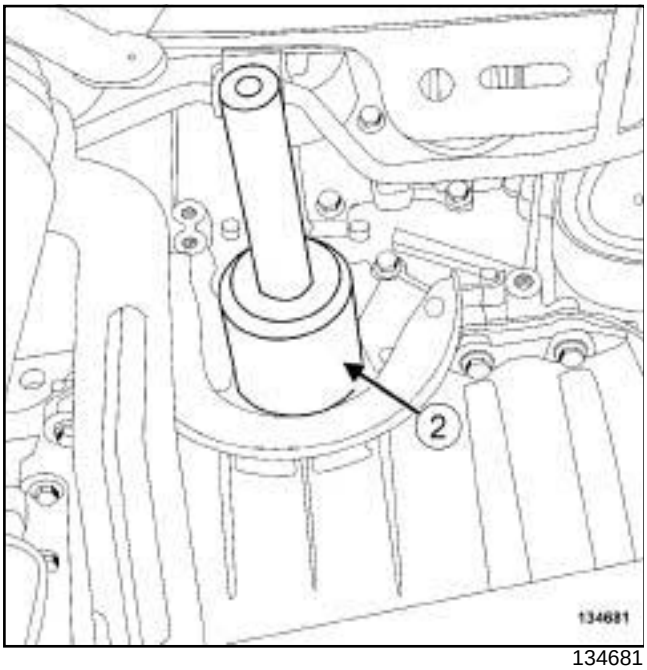

134681

❑ Refit a new crankshaft seal at the timing end, using the tool **(Mot. 1385)** (**2**) .

III - FINAL OPERATION

❑ Refit:

- the crankshaft timing sprocket,
- the timing belt (see **11A**, **Top and front of engine**, **Timing belt: Removal - Refitting**, page **11A-29**) ,
- the right-hand suspended engine mounting (see **19D**, **Engine mounting**, **Right-hand suspended engine mounting: Removal - Refitting**, page **19D-18**) ,
- the crankshaft accessories pulley (see **11A**, **Top and front of engine**, **Crankshaft accessories pulley: Removal - Refitting**, page **11A-15**) ,
- the accessories belt (see **11A**, **Top and front of engine**, **Accessories belt: Removal - Refitting**, page **11A-7**) ,
- the lower engine tie-bar (see **19D**, **Engine mounting**, **Lower engine tie-bar: Removal - Refitting**, page **19D-33**) ,
- the engine undertray,
- the front section of the front right-hand wheel arch liner (see **Front wheel arch liner: Removal - Refitting**) (55A, Exterior protection),
- the front right-hand wheel (see **Wheel: Removal - Refitting**) (35A, Wheels and tyres),
- the scoop under the scuttle panel grille (see **Scoop under scuttle panel grille: Removal - Refitting**) (56A, Exterior equipment),
- the scuttle panel grille (see **Scuttle panel grille: Removal - Refitting**) (56A, Exterior equipment),
- the windscreen wiper arms (see **Windscreen wiper arm: Removal - Refitting**) (85A, Wiping - Washing),
- the throttle valve (see **12A**, **Fuel mixture**, **Throttle valve: Removal - Refitting**, page **12A-17**) ,
- the engine cover.

❑ Connect the battery (see **Battery: Removal - Refitting**) (80A, Battery).

K9K

Essential special tooling	
Mot. 1577	Lip seal extractor (shaft diameter 28 mm to 42 mm).
Mot. 1586	Tool for fitting PTFE crankshaft seal, timing end.
Mot. 1714	Adapter for fitting PTFE crankshaft seal, timing end.

REMOVAL

I - REMOVAL PREPARATION OPERATION

❑ Position the vehicle on a two-post lift (see **Vehicle: Towing and lifting**) (02A, Lifting equipment).

❑ Disconnect the battery (see **Battery: Removal - Refitting**) (80A, Battery).

❑ Remove:

- the engine cover,
- the front right-hand wheel (see **Wheel: Removal - Refitting**) (35A, Wheels and tyres),
- the front section of the front right-hand wheel arch liner (see **Front wheel arch liner: Removal - Refitting**) (55A, Exterior protection),
- the engine undertray bolts,
- the engine undertray,
- the accessories belt (see **11A**, **Top and front of engine**, **Accessories belt: Removal - Refitting**, page **11A-7**) ,
- the crankshaft accessories pulley (see **11A**, **Top and front of engine**, **Crankshaft accessories pulley: Removal - Refitting**, page **11A-15**) .

K9K, and 830

❑ Remove the lower engine tie-bar (see **19D**, **Engine mounting**, **Lower engine tie-bar: Removal - Refitting**, page **19D-33**) .

❑ Remove:

- the windscreen wiper arms (see **Windscreen wiper arm: Removal - Refitting**) (85A, Wiping - Washing),
- the scuttle panel grille (see **Scuttle panel grille: Removal - Refitting**) (56A, Exterior equipment),
- the scoop under the scuttle panel grille (see **Scoop under scuttle panel grille: Removal - Refitting**) (56A, Exterior equipment),
- the right-hand suspended engine mounting (see **19D**, **Engine mounting**, **Right-hand suspended engine mounting: Removal - Refitting**, page **19D-18**) .

K9K, and 830

❑ Remove the camshaft position sensor (see **13B**, **Diesel injection**, **Camshaft position sensor: Removal - Refitting**, page **13B-19**) .

❑ Remove the timing belt (see **11A**, **Top and front of engine**, **Timing belt: Removal - Refitting**, page **11A-29**) .

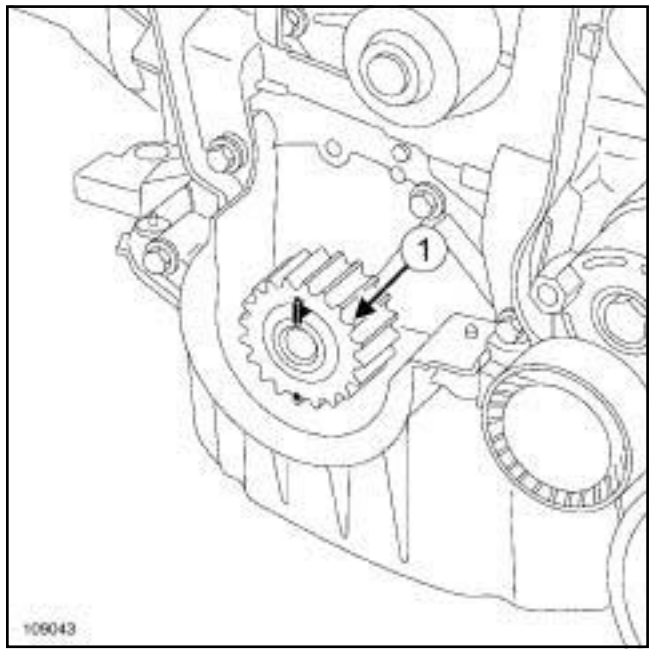

109043

❑ Remove the crankshaft timing sprocket (**1**) .

K9K

II - OPERATION FOR REMOVAL OF PART CONCERNED

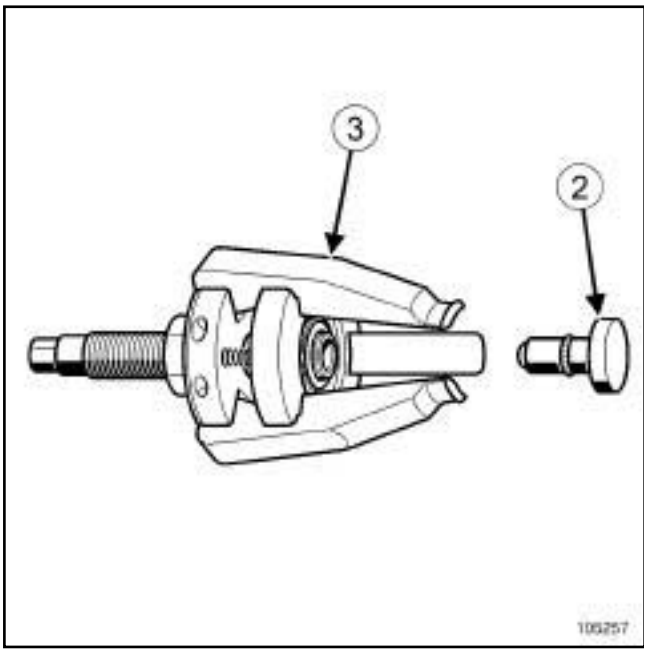

105257

❑ Fit the end piece (**2**) onto the tool **(Mot. 1577)** (**3**) .

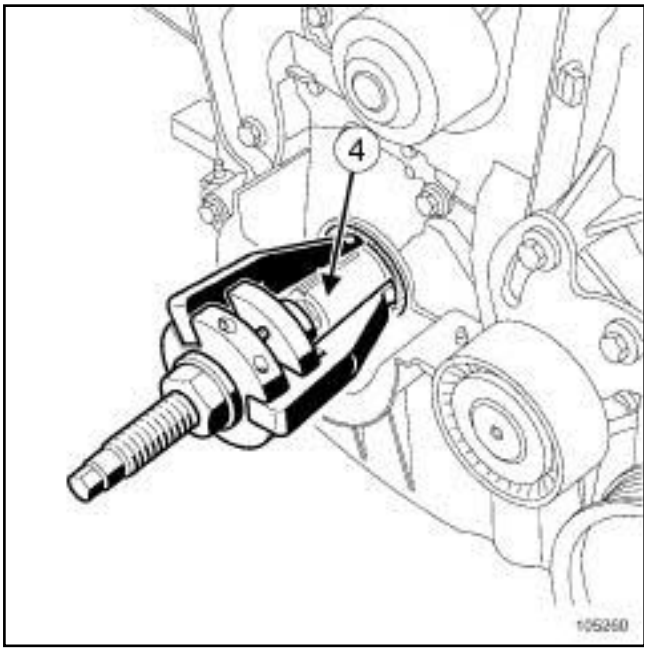

105260

❑ Position the jaws of the tool **(Mot. 1577)** onto the crankshaft nose (**4**) .

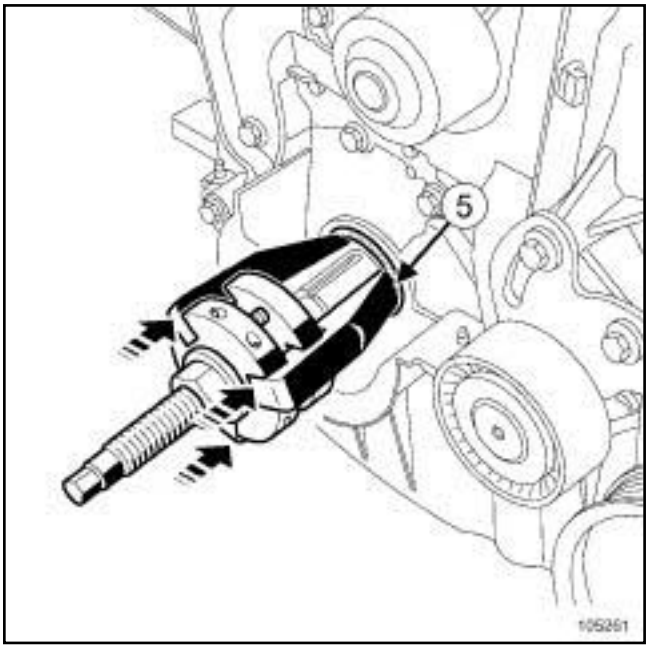

105261

❑ Push on the tool **(Mot. 1577)** until contact is made between the ends (**5**) of the jaws and the crankshaft seal.

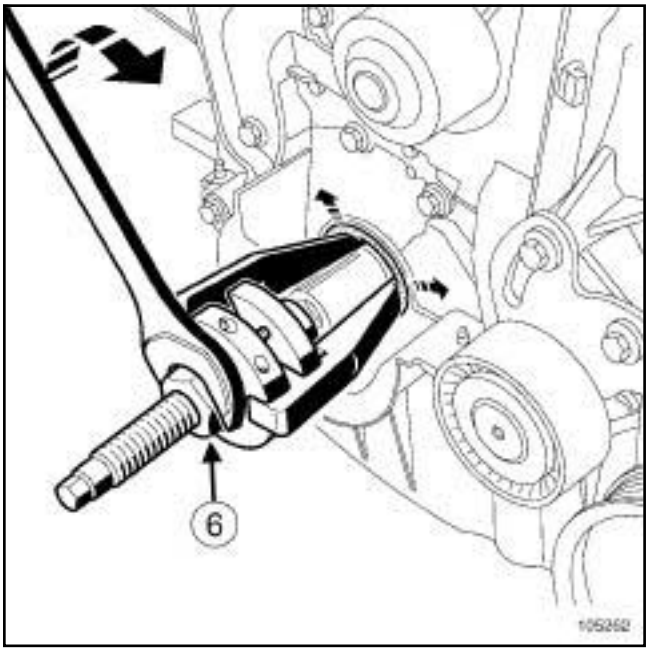

105262

❑ Separate the jaws by screwing the nut **(Mot. 1577)** of the tool (**6**) .

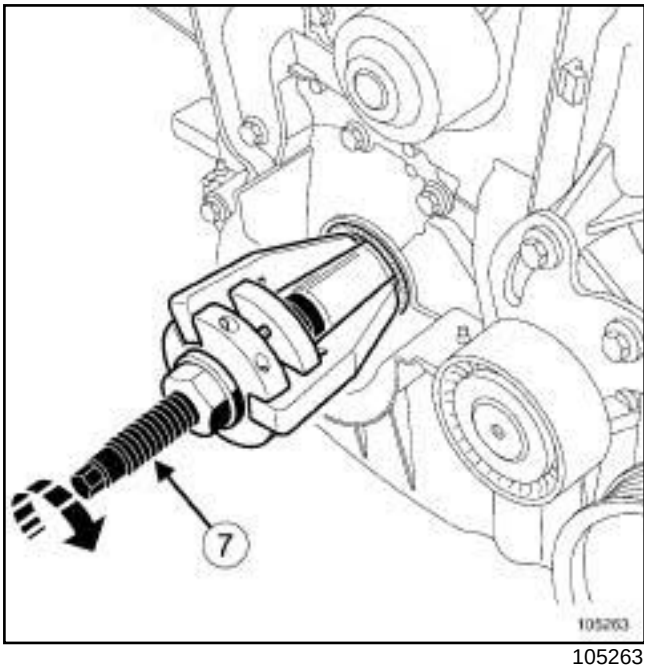

105263

❑ Screw down the threaded rod (**7**) of the **(Mot. 1577)**.

❑ Remove the crankshaft seal using the tool **(Mot. 1577)**.

REFITTING

I - REFITTING PREPARATION OPERATION

❑

> **WARNING**
> To ensure proper sealing, the gasket surfaces must be clean, dry and not greasy (avoid any finger marks).

❑ Use **SURFACE CLEANER** (see **Vehicle: Parts and ingredients for the repairwork**) (04B, Consumables - Products) to clean and degrease:

- the crankshaft seal mating face on the crankshaft,
- the crankshaft seal housing in the crankshaft closure panel.

❑ **parts always to be replaced: Crankshaft seal on timing end (10,03,03,04)**.

II - REFITTING OPERATION FOR PART CONCERNED

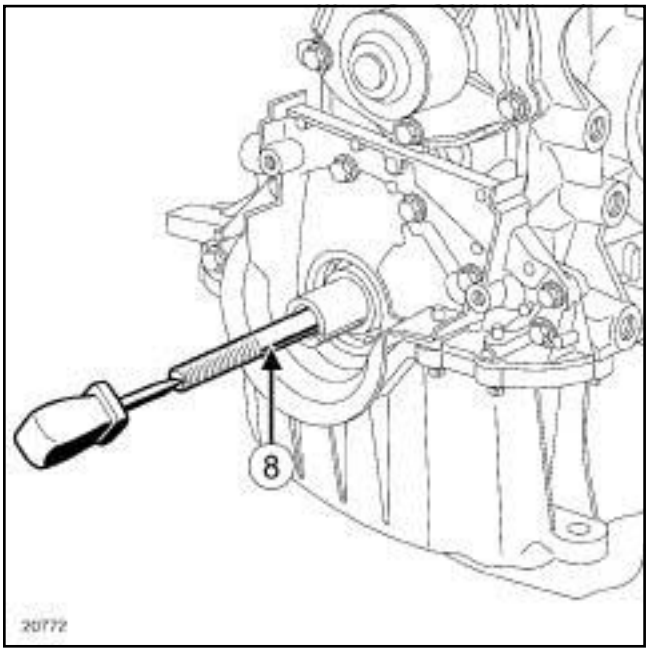

20772

❑ Tighten the threaded rod (**8**) :

- of the tool **(Mot. 1586)** in the crankshaft with an **M12** thread,
- of the tool **(Mot. 1714)** in the crankshaft with an **M14** thread.

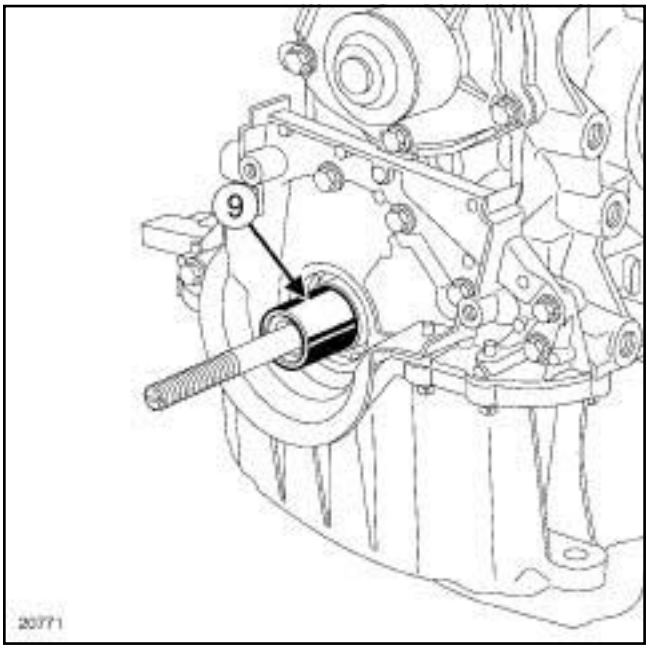

20771

❑ Insert the spacer (**9**) of the **(Mot. 1586)** in the crankshaft.

K9K

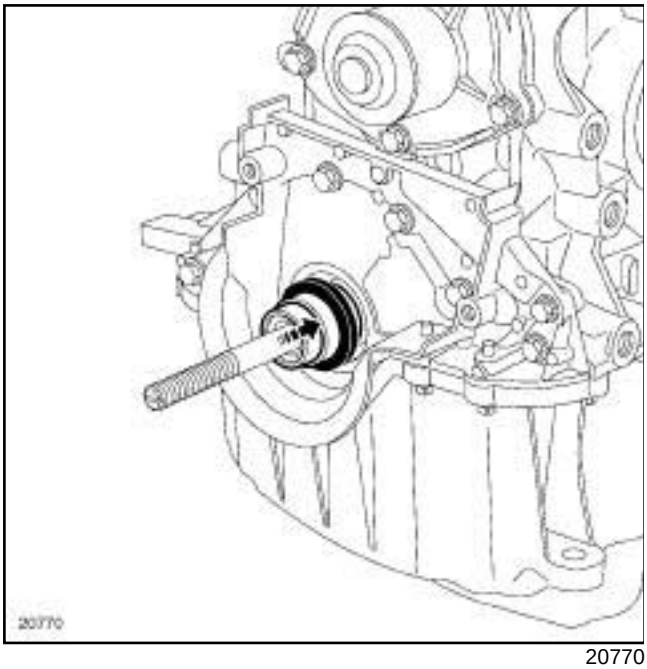

20770

❑ Fit the protector equipped with the crankshaft seal onto the spacer, taking care not to touch the crankshaft seal.

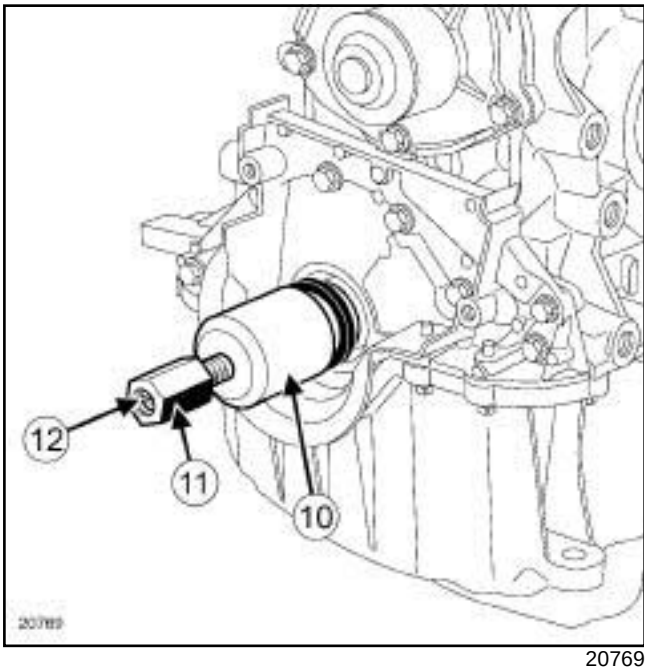

20769

❑ Fit the cover (**10**) and the nut (**11**) (positioning the thread (**12**) of the nut towards the outside of the engine).

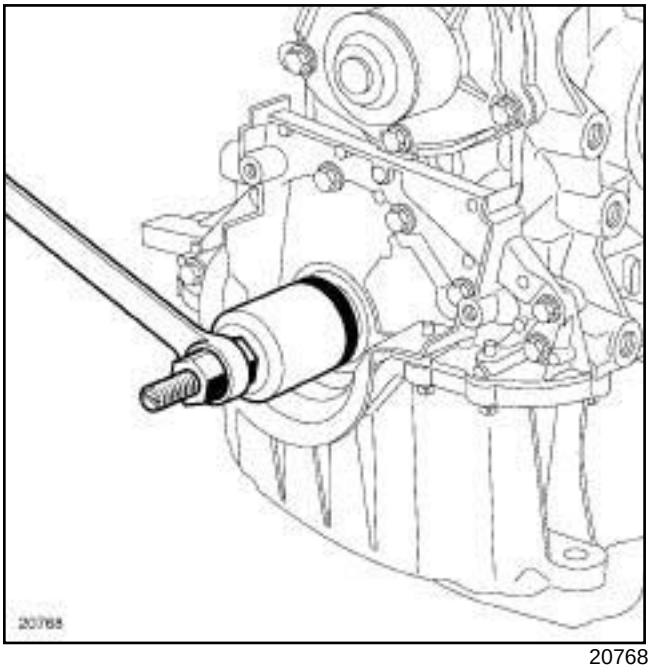

20768

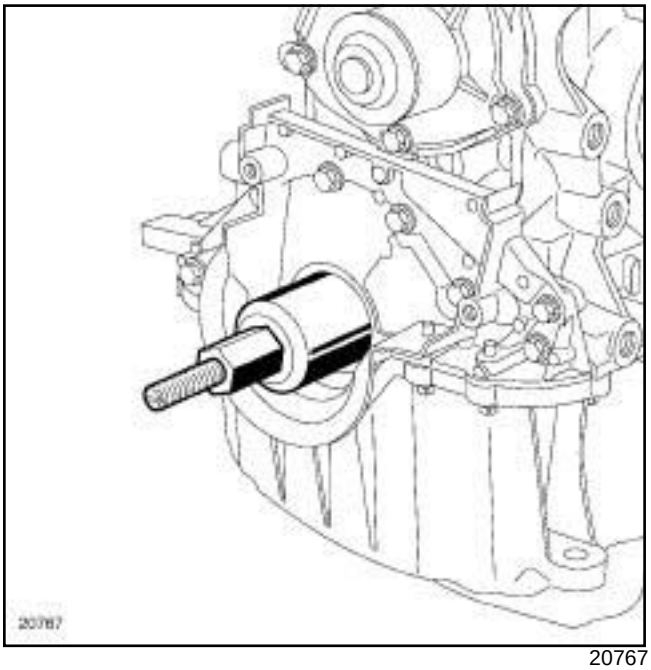

20767

❑ Screw on the nut until the cover touches the spacer.

K9K

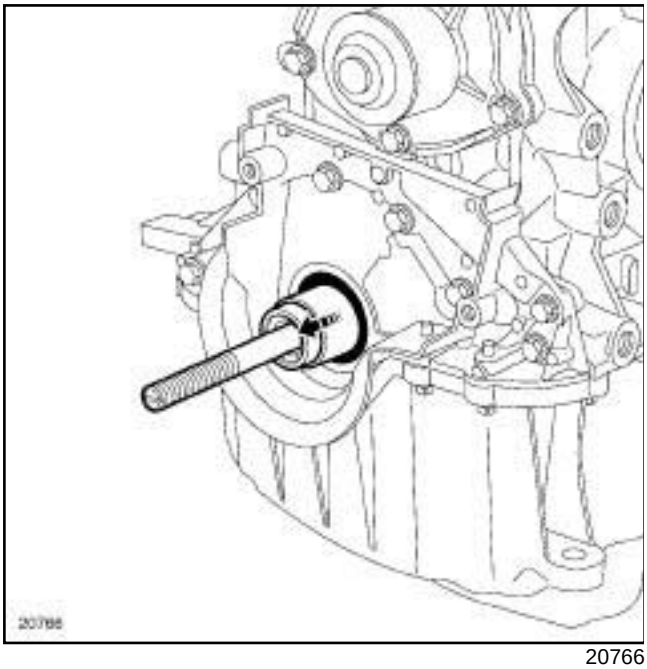

20766

❑ Remove:

- the nut,
- the cover,
- the protector,
- the spacer,
- the threaded rod.

III - FINAL OPERATION

❑ Refit:

- the crankshaft timing sprocket,
- the timing belt (see **11A**, **Top and front of engine**, **Timing belt: Removal - Refitting**, page **11A-29**) .

K9K, and 830

❑ Refit the camshaft position sensor (see **13B**, **Diesel injection**, **Camshaft position sensor: Removal - Refitting**, page **13B-19**) .

❑ Refit:

- the right-hand suspended engine mounting (see **19D**, **Engine mounting**, **Right-hand suspended engine mounting: Removal - Refitting**, page **19D-18**) ,
- the scoop under the scuttle panel grille (see **Scoop under scuttle panel grille: Removal - Refitting**) (56A, Exterior equipment),
- the scuttle panel grille (see **Scuttle panel grille: Removal - Refitting**) (56A, Exterior equipment),
- the windscreen wiper arms (see **Windscreen wiper arm: Removal - Refitting**) (85A, Wiping - Washing),

K9K, and 830

❑ Refit the lower engine tie-bar (see **19D**, **Engine mounting**, **Lower engine tie-bar: Removal - Refitting**, page **19D-33**) .

❑ Refit:

- the crankshaft accessories pulley (see **11A**, **Top and front of engine**, **Crankshaft accessories pulley: Removal - Refitting**, page **11A-15**) ,
- the accessories belt (see **11A**, **Top and front of engine**, **Accessories belt: Removal - Refitting**, page **11A-7**) ,
- the engine undertray,
- the front section of the front right-hand wheel arch liner (see **Front wheel arch liner: Removal - Refitting**) (55A, Exterior protection),
- the front right-hand wheel (see **Wheel: Removal - Refitting**) (35A, Wheels and tyres),
- the engine cover.

❑ Connect the battery (see **Battery : Removal - Refitting**) (80A, Battery).

F4R

Essential special tooling	
Mot. 990-03	Crankshaft oil seal fitting tool (timing end).

REMOVAL

I - REMOVAL PREPARATION OPERATION

❑ Position the vehicle on a two-post lift (see **Vehicle: Towing and lifting**) (02A, Lifting equipment).

❑ Remove:

- the engine cover,
- the battery (see **Battery: Removal - Refitting**) (80A, Battery),
- the battery tray (see **Battery tray: Removal - Refitting**) (80A, Battery),
- the engine undertray bolts,
- the engine undertray,
- the front wheels (see **Wheel: Removal - Refitting**) (35A, Wheels and tyres),
- the front section of the front wheel arch liners (see **Front wheel arch liner: Removal - Refitting**) (55A, Exterior protection),
- the front bumper (see **Front bumper: Removal - Refitting**) (55A, Exterior protection),
- the radiator mounting cross member (see **Radiator support cross member: Removal - Refitting**) (31A, Front axle components),
- the accessories belt (see **11A**, **Top and front of engine**, **Accessories belt: Removal - Refitting**, page **11A-7**) ,
- the crankshaft accessories pulley (see **11A**, **Top and front of engine**, **Crankshaft accessories pulley: Removal - Refitting**, page **11A-15**) ,
- the lower engine tie-bar (see **19D**, **Engine mounting**, **Lower engine tie-bar: Removal - Refitting**, page **19D-33**) ,
- the windscreen wiper arms (see **Windscreen wiper arm: Removal - Refitting**) (85A, Wiping - Washing),
- the scuttle panel grille (see **Scuttle panel grille: Removal - Refitting**) (56A, Exterior equipment),
- the scoop under the scuttle panel grille (see **Scoop under scuttle panel grille: Removal - Refitting**) (56A, Exterior equipment),
- the right-hand suspended engine mounting (see **19D**, **Engine mounting**, **Right-hand suspended engine mounting: Removal - Refitting**, page **19D-18**) ,
- the timing belt (see **11A**, **Top and front of engine**, **Timing belt: Removal - Refitting**, page **11A-29**) .

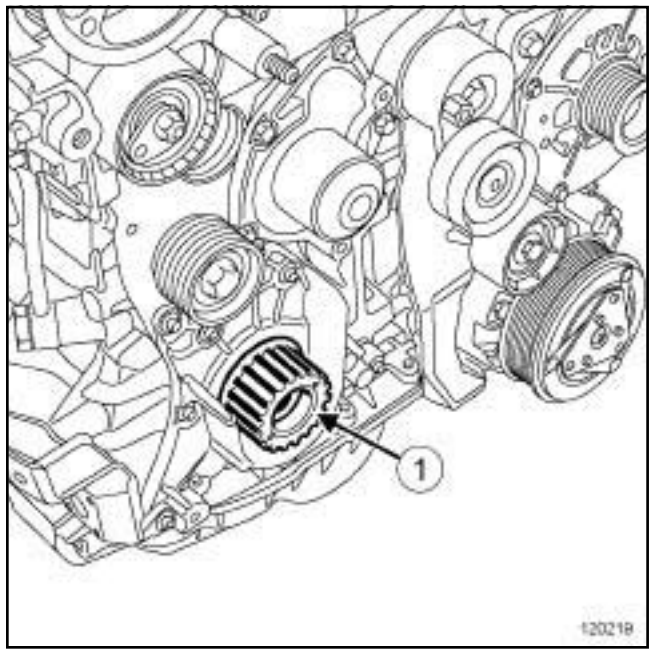

120219

❑ Remove the crankshaft timing sprocket (**1**) .

II - OPERATION FOR REMOVAL OF PART CONCERNED

❑ Remove the timing end crankshaft seal using a screwdriver.

REFITTING

I - REFITTING PREPARATION OPERATION

❑ **parts always to be replaced: Crankshaft seal on timing end (10,03,03,04)**.

> **WARNING**
> Do not scrape the joint faces of the aluminium, any damage caused to the joint face will result in a risk of leaks.

> **WARNING**
> To ensure proper sealing, the gasket surfaces must be clean, dry and not greasy (avoid any finger marks).

F4R

❑ Use **SURFACE CLEANER** (see **Vehicle: Parts and ingredients for the repairwork**) (04B, Consumables - Products) to clean and degrease:

- the crankshaft seal mating face,
- the cylinder block seal housing.

II - REFITTING OPERATION FOR PART CONCERNED

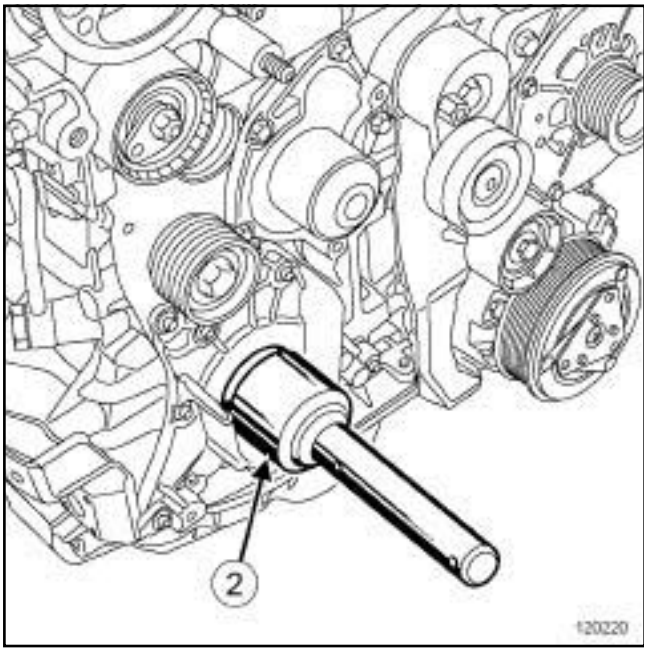

120220

❑ Refit a new crankshaft seal at the timing end, using the tool **(Mot. 990-03)** (**2**) .

III - FINAL OPERATION

❑ Refit:

- the crankshaft timing sprocket,
- the timing belt (see **11A**, **Top and front of engine**, **Timing belt: Removal - Refitting**, page **11A-29**) ,
- the right-hand suspended engine mounting (see **19D**, **Engine mounting**, **Right-hand suspended engine mounting: Removal - Refitting**, page **19D-18**) ,
- the scoop under the scuttle panel grille (see **Scoop under scuttle panel grille: Removal - Refitting**) (56A, Exterior equipment),
- the scuttle panel grille (see **Scuttle panel grille: Removal - Refitting**) (56A, Exterior equipment),
- the windscreen wiper arms (see **Windscreen wiper arm: Removal - Refitting**) (85A, Wiping - Washing),
- the lower engine tie-bar (see **19D**, **Engine mounting**, **Lower engine tie-bar: Removal - Refitting**, page **19D-33**) ,
- the crankshaft accessories pulley (see **11A**, **Top and front of engine**, **Crankshaft accessories pulley: Removal - Refitting**, page **11A-15**) ,
- the accessories belt (see **11A**, **Top and front of engine**, **Accessories belt: Removal - Refitting**, page **11A-7**) ,
- the radiator mounting cross member (see **Radiator support cross member: Removal - Refitting**) (31A, Front axle components),
- the front bumper (see **Front bumper: Removal - Refitting**) (55A, Exterior protection),
- the front section of the front wheel arch liners (see **Front wheel arch liner: Removal - Refitting**) (55A, Exterior protection),
- the front wheels (see **Wheel: Removal - Refitting**) (35A, Wheels and tyres),
- the engine undertray,
- the battery tray (see **Battery tray: Removal - Refitting**) (80A, Battery),
- the battery (see **Battery: Removal - Refitting**) (80A, Battery),
- the engine cover.

F9Q

Essential special tooling	
Mot. 990-03	Crankshaft oil seal fitting tool (timing end).

REMOVAL

I - REMOVAL PREPARATION OPERATION

❏ Position the vehicle on a two-post lift (see **Vehicle: Towing and lifting**) (02A, Lifting equipment).

❏ Disconnect the battery (see **Battery: Removal - Refitting**) (80A, Battery).

❏ Remove:

- the engine cover,
- the engine undertray bolts,
- the engine undertray,
- the front right-hand wheel (see **Wheel: Removal - Refitting**) (35A, Wheels and tyres),
- the front right-hand wheel arch liner (see **Front wheel arch liner: Removal - Refitting**) (55A, Exterior protection),
- the accessories belt (see **11A**, **Top and front of engine**, **Accessories belt: Removal - Refitting**, page **11A-7**) ,
- the crankshaft accessories pulley (see **11A**, **Top and front of engine**, **Crankshaft accessories pulley: Removal - Refitting**, page **11A-15**) ,
- the lower engine tie-bar (see **19D**, **Engine mounting**, **Lower engine tie-bar: Removal - Refitting**, page **19D-33**) ,
- the windscreen wiper arms (see **Windscreen wiper arm: Removal - Refitting**) (85A, Wiping - Washing),
- the scuttle panel grille (see **Scuttle panel grille: Removal - Refitting**) (56A, Exterior equipment),
- the scoop under the scuttle panel grille (see **Scoop under scuttle panel grille: Removal - Refitting**) (56A, Exterior equipment),
- the right-hand suspended engine mounting (see **19D**, **Engine mounting**, **Right-hand suspended engine mounting: Removal - Refitting**, page **19D-18**) ,
- the timing belt (see **11A**, **Top and front of engine**, **Timing belt: Removal - Refitting**, page **11A-29**) .

II - OPERATION FOR REMOVAL OF PART CONCERNED

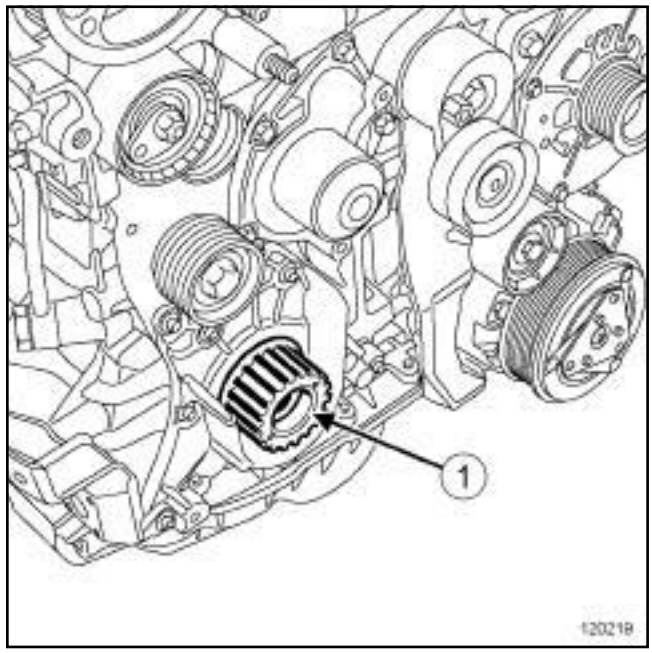

120219

❏ Remove:

- the crankshaft sprocket (**1**) ,
- the crankshaft seal at the timing end using a flat-blade screwdriver, taking care not to damage the mating face of the crankshaft.

REFITTING

I - REFITTING PREPARATION OPERATION

❏ **parts always to be replaced: Crankshaft seal on timing end (10,03,03,04)**.

❏ Use **SURFACE CLEANER** (see **Vehicle: Parts and ingredients for the repairwork**) (04B, Consumables - Products) to clean and degrease:

- the crankshaft seal mating face on the crankshaft,
- the crankshaft seal housing on the cylinder block.

WARNING
To ensure proper sealing, the gasket surfaces must be clean, dry and not greasy (avoid any finger marks).

F9Q

II - REFITTING OPERATION FOR PART CONCERNED

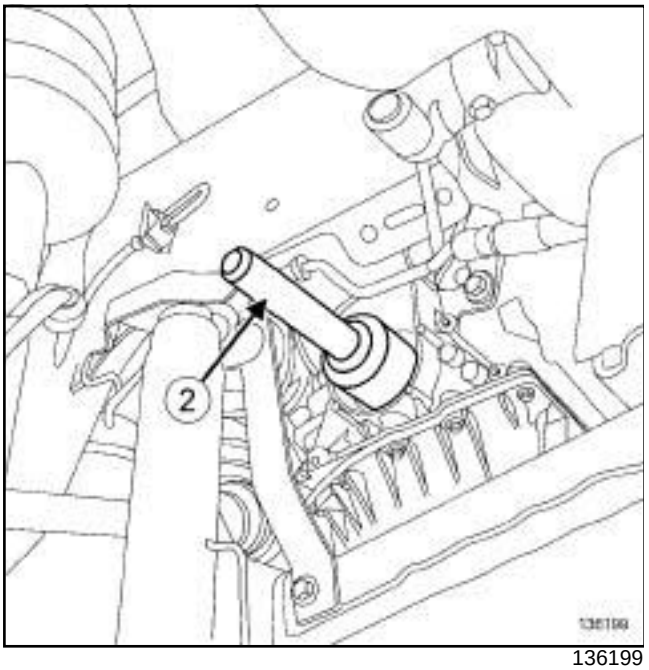

136199

❑ Refit:

- a new crankshaft seal at the timing end, using the tool **(Mot. 990-03)** (**2**) ,
- the crankshaft sprocket.

III - FINAL OPERATION

❑ Refit:

- the timing belt (see **11A**, **Top and front of engine**, **Timing belt: Removal - Refitting**, page **11A-29**) ,
- the right-hand suspended engine mounting (see **19D**, **Engine mounting**, **Right-hand suspended engine mounting: Removal - Refitting**, page **19D-18**) ,
- the scoop under the scuttle panel grille (see **Scoop under scuttle panel grille: Removal - Refitting**) (56A, Exterior equipment),
- the scuttle panel grille (see **Scuttle panel grille: Removal - Refitting**) (56A, Exterior equipment),
- the windscreen wiper arms (see **Windscreen wiper arm: Removal - Refitting**) (85A, Wiping - Washing),
- the lower engine tie-bar (see **19D**, **Engine mounting**, **Lower engine tie-bar: Removal - Refitting**, page **19D-33**) ,
- the crankshaft accessories pulley (see **11A**, **Top and front of engine**, **Crankshaft accessories pulley: Removal - Refitting**, page **11A-15**) ,
- the accessories belt (see **11A**, **Top and front of engine**, **Accessories belt: Removal - Refitting**, page **11A-7**) ,
- the front right-hand wheel arch liner (see **Front wheel arch liner: Removal - Refitting**) (55A, Exterior protection),
- the front right-hand wheel (see **Wheel: Removal - Refitting**) (35A, Wheels and tyres),
- the engine undertray,
- the engine cover.

❑ Connect the battery (see **Battery : Removal - Refitting**) (80A, Battery).

K4M

Essential special tooling	
Mot. 1129-01	Crankshaft oil seal fitting tool (flywheel end) (80 x 100 x 8 seal).

Tightening torques ▽	
clip on the throttle valve air inlet pipe	**6 N.m**

REMOVAL

I - REFITTING PREPARATION OPERATION

❑ Position the vehicle on a two-post lift (see **Vehicle: Towing and lifting**) (02A, Lifting equipment).

❑ Remove:

- the engine cover,
- the windscreen wiper arms (see **Windscreen wiper arm: Removal - Refitting**) (85A, Wiping - Washing),
- the scuttle panel grille (see **Scuttle panel grille: Removal - Refitting**) (56A, Exterior equipment),
- the scoop under the scuttle panel grille (see **Scoop under scuttle panel grille: Removal - Refitting**) (56A, Exterior equipment),
- the battery (see **Battery: Removal - Refitting**) (80A, Battery),
- the battery tray (see **Battery tray: Removal - Refitting**) (80A, Battery),
- the air filter unit (see **12A**, **Fuel mixture**, **Air filter unit: Removal - Refitting**, page **12A-4**) .

❑ Undo the clip on the throttle valve air inlet pipe.

❑ Disconnect the air filter unit air outlet pipe from the throttle valve.

❑ Remove:

- the air outlet pipe from the air filter unit,
- the front wheels (see **Wheel: Removal - Refitting**) (35A, Wheels and tyres),
- the front section of the front wheel arch liners (see **Front wheel arch liner: Removal - Refitting**) (55A, Exterior protection),
- the engine undertray bolts,
- the engine undertray,
- the front bumper (see **Front bumper: Removal - Refitting**) (55A, Exterior protection).

❑ Drain the manual gearbox (see **Manual gearbox oil: Draining - Refilling**) (21A, Manual gearbox).

❑ Remove:

- the starter (see **16A**, **Starting - Charging**, **Starter: Removal - Refitting**, page **16A-16**) ,
- the crankshaft position sensor (see **17B**, **Petrol injection**, **Crankshaft position sensor: Removal - Refitting**, page **17B-15**) ,
- the lower engine tie-bar (see **19D**, **Engine mounting**, **Lower engine tie-bar: Removal - Refitting**, page **19D-33**) ,
- the front right-hand wheel driveshaft (see **Front right-hand wheel driveshaft: Removal - Refitting**) (29A, Driveshafts),
- the front left-hand wheel driveshaft (see **Front left-hand wheel driveshaft: Removal - Refitting**) (29A, Driveshafts),
- the differential output seals (see **Differential output seal: Removal - Refitting**) (21A, Manual gearbox),
- the radiator mounting cross member (see **Radiator support cross member: Removal - Refitting**) (31A, Front axle components),
- the front axle subframe (see **Front axle sub-frame: Removal - Refitting**) (31A, Front axle components),
- the left-hand suspended engine mounting (see **19D**, **Engine mounting**, **Left-hand suspended engine mounting: Removal - Refitting**, page **19D-1**) ,
- the manual gearbox (see **Manual gearbox: Removal - Refitting**) (21A, Manual gearbox).
- the « pressure plate - disc » assembly (see **Mechanism / Disk: Removal - Refitting**) (20A, Clutch),
- the flywheel (see **10A**, **Engine and cylinder block assembly**, **Flywheel: Removal - Refitting**, page **10A-157**) .

K4M

II - OPERATION FOR REMOVAL OF PART CONCERNED

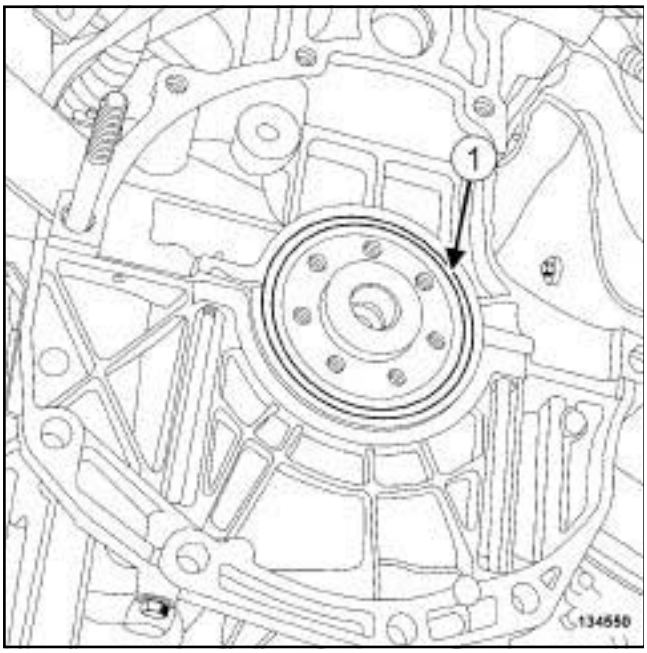

134550

❑ Remove the crankshaft seal (**1**) using a screwdriver.

> Note:
>
> Take care not to damage the seal mating face on the crankshaft.

REFITTING

I - REFITTING PREPARATION OPERATION

❑ **parts always to be replaced: Crankshaft seal on gearbox end (10,03,03,05)**.

❑ Use **SURFACE CLEANER** (see **Vehicle: Parts and ingredients for the repairwork**) (04B, Consumables - Products) to clean and degrease:

- the seal mating face on the crankshaft,
- the seal housing on the cylinder block.

> **WARNING**
>
> To ensure proper sealing, the gasket surfaces must be clean, dry and not greasy (avoid any finger marks).

II - REFITTING OPERATION FOR PART CONCERNED

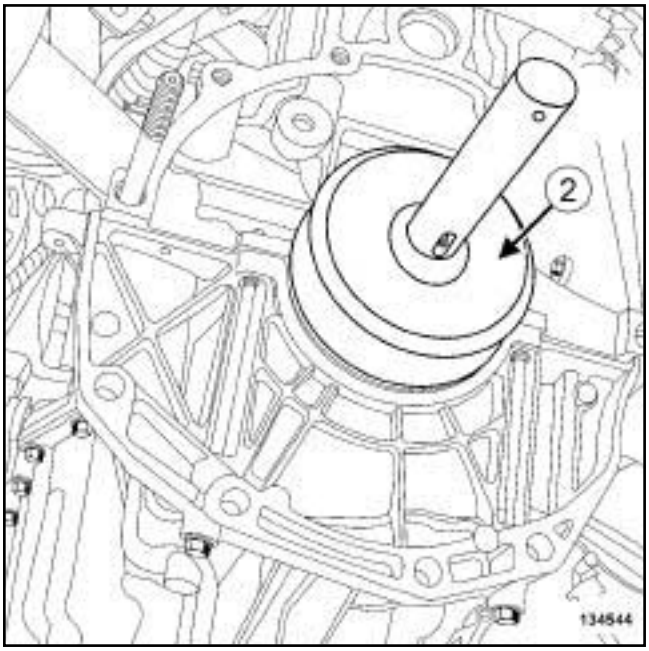

134544

❑ Refit the crankshaft seal using the **(Mot. 1129-01)** (**2**) .

III - FINAL OPERATION

❑ Refit:

- the flywheel (see **10A**, **Engine and cylinder block assembly**, **Flywheel: Removal - Refitting**, page **10A-157**) ,
- the « pressure plate - disc » assembly (see **Mechanism / Disk: Removal - Refitting**) (20A, Clutch),
- the manual gearbox (see **Manual gearbox: Removal - Refitting**) (21A, Manual gearbox),
- the left-hand suspended engine mounting (see **19D**, **Engine mounting**, **Left-hand suspended engine mounting: Removal - Refitting**, page **19D-1**) ,
- the front axle subframe (see **Front axle sub-frame: Removal - Refitting**) (31A, Front axle components),
- the radiator mounting cross member (see **Radiator support cross member: Removal - Refitting**) (31A, Front axle components),
- the new differential output seals (see **Differential output seal: Removal - Refitting**) (21A, Manual gearbox),

K4M

- the front right-hand wheel driveshaft (see **Front right-hand wheel driveshaft: Removal - Refitting**) (29A, Driveshafts),
- the front left-hand wheel driveshaft (see **Front left-hand wheel driveshaft: Removal - Refitting**) (29A, Driveshafts),
- the lower engine tie-bar (see **19D**, **Engine mounting**, **Lower engine tie-bar: Removal - Refitting**, page **19D-33**) ,
- the crankshaft position sensor (see **17B**, **Petrol injection**, **Crankshaft position sensor: Removal - Refitting**, page **17B-15**) ,
- the starter (see **16A**, **Starting - Charging**, **Starter: Removal - Refitting**, page **16A-16**) ,
- the front bumper (see **Front bumper: Removal - Refitting**) (55A, Exterior protection).
- the engine undertray,
- the front section of the front wheel arch liners (see **Front wheel arch liner: Removal - Refitting**) (55A, Exterior protection),
- the front wheels (see **Wheel: Removal - Refitting**) (35A, Wheels and tyres),
- the air filter unit (see **12A**, **Fuel mixture**, **Air filter unit: Removal - Refitting**, page **12A-4**) ,
- the air outlet pipe for the air filter unit.

❏ Connect the air filter box air outlet pipe to the throttle valve.

❏ Torque tighten the **clip on the throttle valve air inlet pipe (6 N.m)**.

❏ Refit:

- the battery tray (see **Battery tray: Removal - Refitting**) (80A, Battery),
- the battery (see **Battery: Removal - Refitting**) (80A, Battery),
- the scoop under the scuttle panel grille (see **Scoop under scuttle panel grille: Removal - Refitting**) (56A, Exterior equipment),
- the scuttle panel grille (see **Scuttle panel grille: Removal - Refitting**) (56A, Exterior equipment),
- the windscreen wiper arms (see **Windscreen wiper arm: Removal - Refitting**) (85A, Wiping - Washing).

❏ Perform the following operations:

- fill the manual gearbox with oil (see **Manual gearbox oil: Draining - Refilling**) (21A, Manual gearbox),
- bleed the clutch control circuit (see **Clutch circuit: Bleeding**) (37A, Mechanical component controls).

❏ Refit the engine cover.

K9K

Essential special tooling	
Mot. 1579	Lip seal extractor (shaft diameter 80 mm to 98 mm).

REMOVAL

I - REMOVAL PREPARATION OPERATION

❑ Position the vehicle on a two-post lift (see **Vehicle: Towing and lifting**) (02A, Lifting equipment).

❑ Remove:

- the engine cover,
- the battery (see **Battery: Removal - Refitting**) (80A, Battery),
- the battery tray (see **Battery tray: Removal - Refitting**) (80A, Battery),
- the air filter unit (see **12A**, **Fuel mixture**, **Air filter unit: Removal - Refitting**, page **12A-4**) ,
- the engine undertray bolts,
- the engine undertray,
- the crankshaft position sensor (see **13B**, **Diesel injection**, **Crankshaft position sensor: Removal - Refitting**, page **13B-25**) ,
- the starter (see **16A**, **Starting - Charging**, **Starter: Removal - Refitting**, page **16A-16**) ,
- the front wheels (see **Wheel: Removal - Refitting**) (35A, Wheels and tyres),
- the front section of the front wheel arch liners (see **Front wheel arch liner: Removal - Refitting**) (55A, Exterior protection).

❑ Drain the gearbox (see **Manual gearbox oil: Draining - Refilling**) .

❑ Remove:

- the front left-hand wheel driveshaft (see **Front left-hand wheel driveshaft: Removal - Refitting**) (29A, Driveshaft),
- the front right-hand wheel driveshaft (see **Front right-hand wheel driveshaft: Removal - Refitting**) (29A, Driveshaft),
- the differential output seals (see **Differential output seal: Removal - Refitting**) (21A, Manual gearbox).

JR5

❑ Remove the lower engine tie-bar (see **19D**, **Engine mounting**, **Lower engine tie-bar: Removal - Refitting**, page **19D-33**) .

❑ Remove:

- the front bumper (see **Front bumper: Removal - Refitting**) (55A, Exterior protection),
- the radiator mounting cross member (see **Radiator support cross member: Removal - Refitting**) (31A, Front axle components),
- the front axle subframe (see **Front axle sub-frame: Removal - Refitting**) (31A, Front axle components),
- the windscreen wiper arms (see **Windscreen wiper arm: Removal - Refitting**) (85A, Wiping - Washing),
- the scuttle panel grille (see **Scuttle panel grille: Removal - Refitting**) (56A, Exterior equipment),
- the scoop under the scuttle panel grille (see **Scoop under scuttle panel grille: Removal - Refitting**) (56A, Exterior equipment),
- the left-hand suspended engine mounting (see **19D**, **Engine mounting**, **Left-hand suspended engine mounting: Removal - Refitting**, page **19D-1**) ,
- the manual gearbox (see **Manual gearbox: Removal - Refitting**) (21A, Manual gearbox).
- the hydraulic clutch release bearing (see **Clutch thrust bearing: Removal - Refitting**) (20A, Clutch),
- the clutch disc and pressure plate (see **Mechanism / Disk: Removal - Refitting**) (20A, Clutch),
- the flywheel (see **10A**, **Engine and cylinder block assembly**, **Flywheel: Removal - Refitting**, page **10A-157**) .

K9K

II - OPERATION FOR REMOVAL OF PART CONCERNED

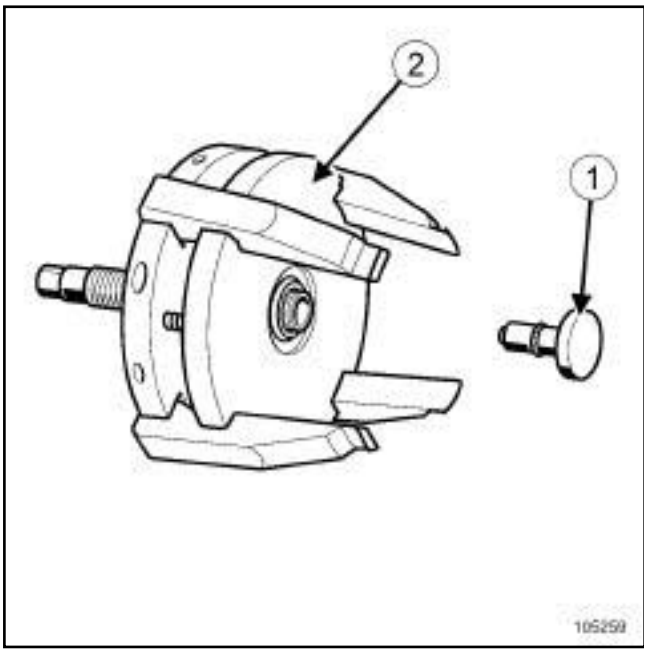

105259

❑ Fit the end piece (**1**) of the **(Mot. 1579)** (**2**) .

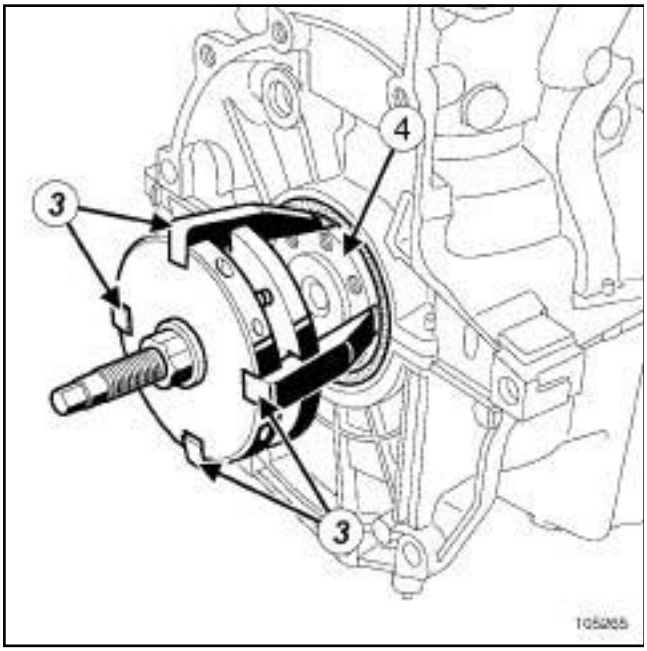

105265

❑ Position the jaws (**3**) of the **(Mot. 1579)** on the crankshaft (**4**) .

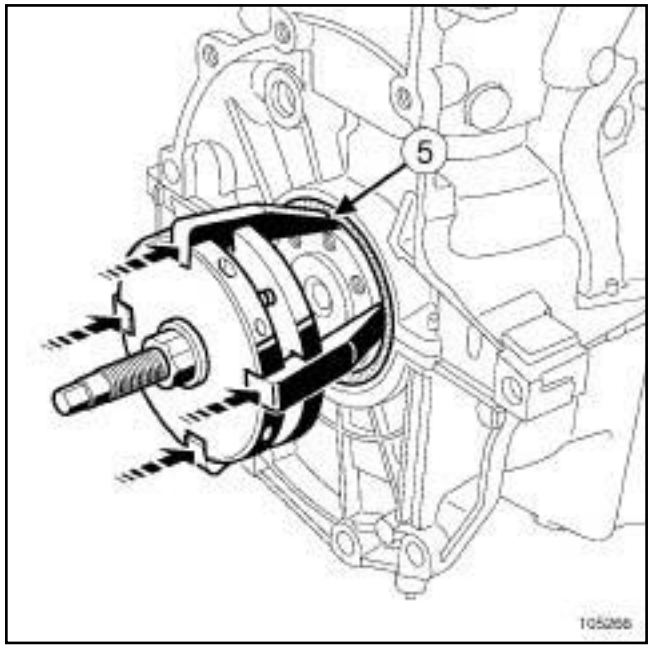

105266

❑ Push the tool **(Mot. 1579)** until contact is made between the ends (**5**) of the jaws and the crankshaft seal.

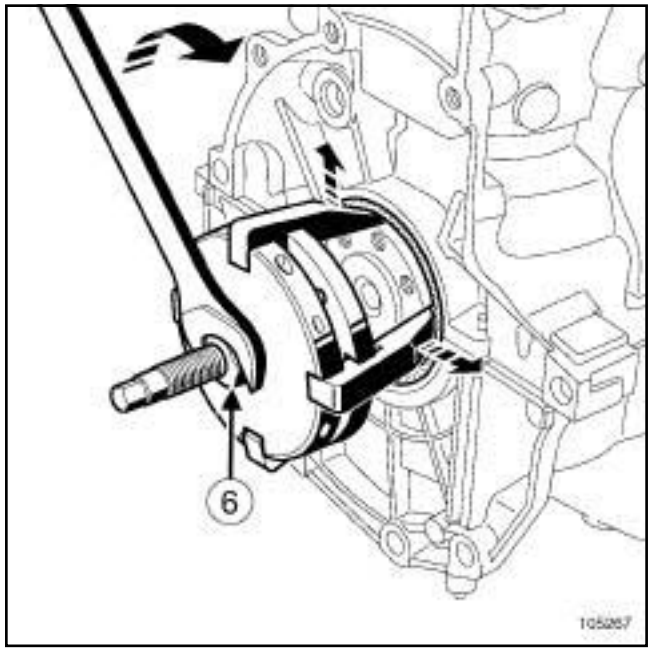

105267

❑ Move the jaws away by tightening the bolt (**6**) using an open-jawed spanner.

K9K

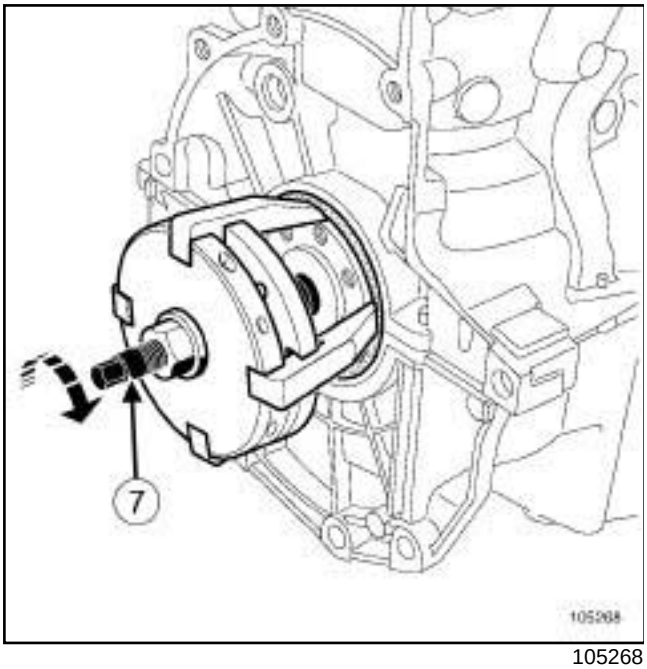

105268

❑ Screw down the threaded rod (**7**) of the **(Mot. 1579)**.

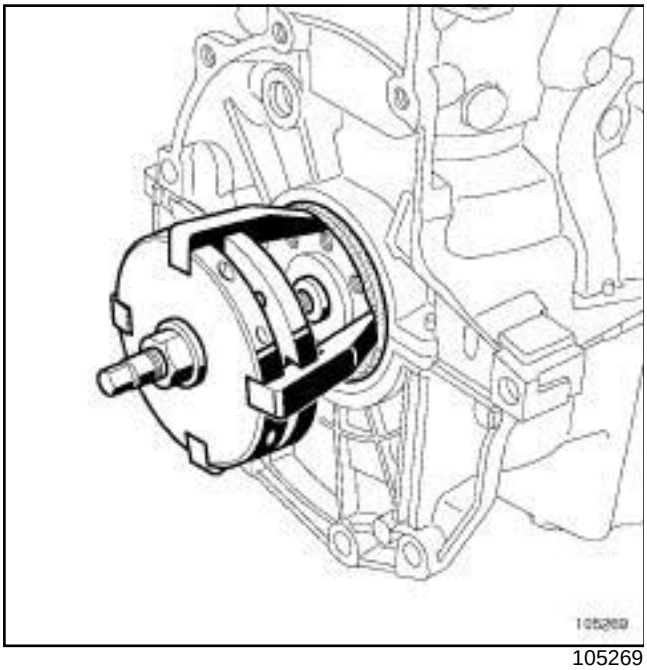

105269

❑ Remove the crankshaft seal using the tool **(Mot. 1579)**.

REFITTING

I - REFITTING PREPARATION OPERATION

❑

> **WARNING**
> To ensure proper sealing, the gasket surfaces must be clean, dry and not greasy (avoid any finger marks).

❑ Use **SURFACE CLEANER** (see **Vehicle: Parts and ingredients for the repairwork**) (04B, Consumables - Products) to clean and degrease:

- the crankshaft seal mating face on the crankshaft,
- the crankshaft seal housing in the cylinder block.

❑ **parts always to be replaced: Differential output seal (12,01,05,10)**.

II - REFITTING OPERATION FOR PART CONCERNED

❑ Refit the crankshaft seal on the gearbox side (see **Cylinder block: Refitting**) (Technical Note 6006A, 10A, Engine and peripherals).

III - FINAL OPERATION

❑ Refit:

- the flywheel (see **10A**, **Engine and cylinder block assembly**, **Flywheel: Removal - Refitting**, page **10A-157**) ,
- the clutch disc and pressure plate (see **Mechanism / Disk: Removal - Refitting**) (20A, Clutch),
- the hydraulic clutch release bearing (see **Clutch thrust bearing: Removal - Refitting**) (20A, Clutch),
- the manual gearbox (see **Manual gearbox: Removal - Refitting**) (21A, Manual gearbox),
- the left-hand suspended engine mounting (see **19D**, **Engine mounting**, **Left-hand suspended engine mounting: Removal - Refitting**, page **19D-1**) ,
- the scoop under the scuttle panel grille (see **Scoop under scuttle panel grille: Removal - Refitting**) (56A, Exterior equipment),
- the scuttle panel grille (see **Scuttle panel grille: Removal - Refitting**) (56A, Exterior equipment),
- the windscreen wiper arms (see **Windscreen wiper arm: Removal - Refitting**) (85A, Wiping - Washing),

K9K

- the front axle subframe (see **Front axle sub-frame: Removal - Refitting**) (31A, Front axle components),
- the radiator mounting cross member (see **Radiator support cross member: Removal - Refitting**) (31A, Front axle components),
- the front bumper (see **Front bumper: Removal - Refitting**) (55A, Exterior protection).

JR5

❑ Refit the lower engine tie-bar (see **19D**, **Engine mounting**, **Lower engine tie-bar: Removal - Refitting**, page **19D-33**) .

❑ Refit:

- the new differential output seals (see **Differential output seal: Removal - Refitting**) (21A, Manual gearbox),
- the front right-hand wheel driveshaft (see **Front right-hand wheel driveshaft: Removal - Refitting**) (29A, Driveshafts),
- the front left-hand wheel driveshaft (see **Front left-hand wheel driveshaft: Removal - Refitting**) (29A, Driveshafts).

❑ Fill the manual gearbox (see **Manual gearbox oil: Draining - Refilling**) (21A, Manual gearbox).

❑ Refit:

- the front section of the front wheel arch liners (see **Front wheel arch liner: Removal - Refitting**) (55A, Exterior protection),
- the front wheels (see **Wheel: Removal - Refitting**) (35A, Wheels and tyres),
- the starter (see **16A**, **Starting - Charging**, **Starter: Removal - Refitting**, page **16A-16**) ,
- the crankshaft position sensor (see **13B**, **Diesel injection**, **Crankshaft position sensor: Removal - Refitting**, page **13B-25**) .

❑ Bleed the clutch control circuit (see **Clutch circuit: Bleeding**) (37A, Mechanical component controls).

❑ Refit:

- the engine undertray,
- the air filter unit (see **12A**, **Fuel mixture**, **Air filter unit: Removal - Refitting**, page **12A-4**) ,
- the battery tray (see **Battery tray: Removal - Refitting**) (80A, Battery),
- the battery (see **Battery : Removal - Refitting**) (80A, Battery),
- the engine cover.

F9Q

Essential special tooling	
Mot. 991-01	Crankshaft oil seal fitting tool (flywheel end) (seal 85 x 105 x 8).

REMOVAL

I - REMOVAL PREPARATION OPERATION

❑ Position the vehicle on a two-post lift (see **Vehicle: Towing and lifting**) (02A, Lifting equipment).

❑ Remove:

- the engine cover,
- the engine undertray bolts,
- the engine undertray,
- the battery (see **Battery: Removal - Refitting**) (80A, Battery),
- the battery tray (see **Battery tray: Removal - Refitting**) (80A, Battery),
- the air filter box (see **12A**, **Fuel mixture**, **Air filter unit: Removal - Refitting**, page **12A-4**) (12A, Fuel mixture),
- the hydraulic clutch control pipe (see **Clutch circuit: Removal - Refitting**) (37A, Mechanical component controls),
- the starter (see **16A**, **Starting - Charging**, **Starter: Removal - Refitting**, page **16A-16**) ,
- the windscreen wiper blade arms (see **Windscreen wiper arm: Removal - Refitting**) (85A, Wiping - Washing),
- the scuttle panel grille (see **Scuttle panel grille: Removal - Refitting**) (56A, Exterior equipment),
- the scoop under the scuttle panel grille (see **Scoop under scuttle panel grille: Removal - Refitting**) (56A, Exterior equipment),
- the front wheels (see **Wheel: Removal - Refitting**) (35A, Wheels and tyres),
- the front wheel arch liners (see **Front wheel arch liner: Removal - Refitting**) (55A, Exterior protection).

❑ Drain the manual gearbox (see **Manual gearbox oil: Draining - Refilling**) (21A, Manual gearbox).

❑ Remove:

- the front right-hand wheel driveshaft (see **Front right-hand wheel driveshaft: Removal - Refitting**) (29A, Driveshaft),
- the front left-hand wheel driveshaft (see **Front left-hand wheel driveshaft: Removal - Refitting**) (29A, Driveshaft),
- the front bumper (see **Front bumper: Removal - Refitting**) (55A, Exterior protection),
- the radiator mounting cross member (see **Radiator support cross member: Removal - Refitting**) (41A, Front lower structure),
- the engine tie-bar (see **19D**, **Engine mounting**, **Lower engine tie-bar: Removal - Refitting**, page **19D-33**) ,
- the front axle subframe (see **Front axle sub-frame: Removal - Refitting**) (31A, Front axle components),
- the left-hand suspended engine mounting (see **19D**, **Engine mounting**, **Left-hand suspended engine mounting: Removal - Refitting**, page **19D-1**) ,
- the manual gearbox (see **Manual gearbox: Removal - Refitting**) (21A, Manual gearbox),
- the « clutch pressure plate - disc » assembly (see **Mechanism / Disk: Removal - Refitting**) (21A, Manual gearbox),
- the flywheel (see **10A**, **Engine and cylinder block assembly**, **Flywheel: Removal - Refitting**, page **10A-157**) .

II - OPERATION FOR REMOVAL OF PART CONCERNED

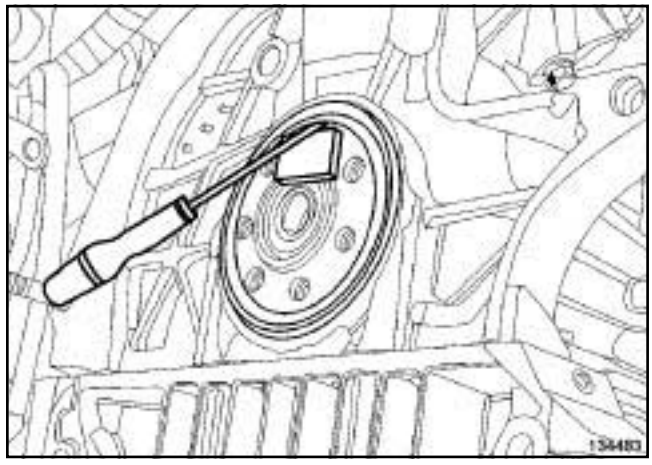

134483

❑ Remove the crankshaft seal on the gearbox side using a **FLAT HEAD SCREWDRIVER** and a wooden block so as not to damage the crankshaft.

F9Q

REFITTING

I - REFITTING PREPARATION OPERATION

❑

> **WARNING**
> To ensure proper sealing, the gasket surfaces must be clean, dry and not greasy (avoid any finger marks).

❑ Use **SURFACE CLEANER** (see **Vehicle: Parts and consumables for repair**) (04B, Consumables and Products) to clean and degrease:

- the seal mating face on the crankshaft,
- the seal housing on the cylinder block.

❑ **parts always to be replaced: Crankshaft seal on gearbox end (10,03,03,05)**

II - REFITTING OPERATION FOR PART CONCERNED

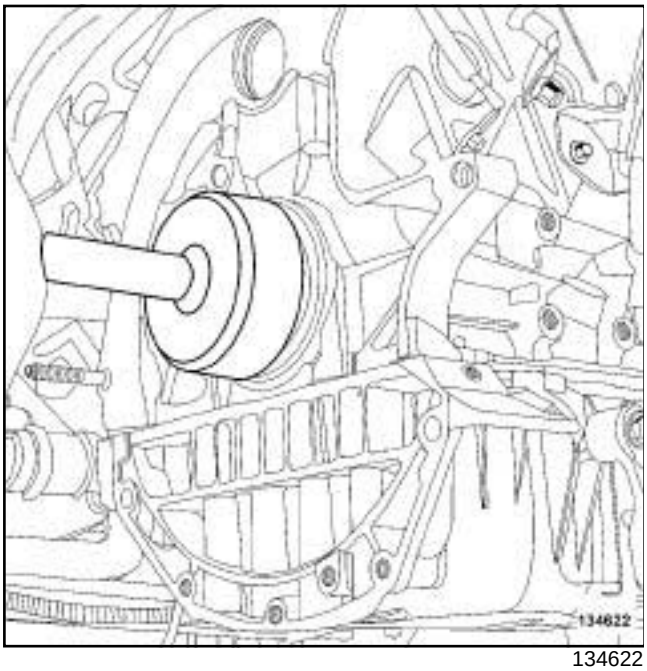

134622

❑ Refit a new crankshaft seal at the gearbox end, using the tool **(Mot. 991-01)**.

III - FINAL OPERATION

❑ Refit:

- the flywheel (see **10A**, **Engine and cylinder block assembly**, **Flywheel: Removal - Refitting**, page **10A-157**) ,
- the « clutch pressure plate - disc » assembly (see **Mechanism / Disk: Removal - Refitting**) (21A, Manual gearbox),
- the manual gearbox (see **Manual gearbox: Removal - Refitting**) (21A, Manual gearbox),
- the left-hand suspended engine mounting (see **19D**, **Engine mounting**, **Left-hand suspended engine mounting: Removal - Refitting**, page **19D-1**) ,
- the front axle subframe (see **Front axle sub-frame: Removal - Refitting**) (31A, Front axle components),
- the engine tie-bar (see **19D**, **Engine mounting**, **Lower engine tie-bar: Removal - Refitting**, page **19D-33**) ,
- the radiator mounting cross member (see **Radiator support cross member: Removal - Refitting**) (41A, Front lower structure),
- the front bumper (see **Front bumper: Removal - Refitting**) (55A, Exterior protection),
- the front left-hand wheel driveshaft (see **Front left-hand wheel driveshaft: Removal - Refitting**) (29A, Driveshaft),
- the front right-hand wheel driveshaft (see **Front right-hand wheel driveshaft: Removal - Refitting**) (29A, Driveshaft),

❑ Fill the manual gearbox (see **Manual gearbox oil: Draining - Refilling**) (21A, Manual gearbox).

❑ Refit:

- the front wheel arch liners (see **Front wheel arch liner: Removal - Refitting**) (55A, Exterior protection),
- the front wheels (see **Wheel: Removal - Refitting**) (35A, Wheels and tyres),
- the scoop under the scuttle panel grille (see **Scoop under scuttle panel grille: Removal - Refitting**) (56A, Exterior equipment),
- the scuttle panel grille (see **Scuttle panel grille: Removal - Refitting**) (56A, Exterior equipment),
- the windscreen wiper blade arms (see **Windscreen wiper arm: Removal - Refitting**) (85A, Wiping - Washing),
- the starter (see **16A**, **Starting - Charging**, **Starter: Removal - Refitting**, page **16A-16**) ,
- the hydraulic clutch control pipe (see **Clutch circuit: Removal - Refitting**) (37A, Mechanical component controls),

F9Q

- the air filter box (see **12A**, **Fuel mixture**, **Air filter unit: Removal - Refitting**, page **12A-4**) (12A, Fuel mixture),
- the battery tray (see **Battery tray: Removal - Refitting**) (80A, Battery),
- the battery (see **Battery: Removal - Refitting**) (80A, Battery),
- the engine undertray,
- the engine cover.

F4R

Essential special tooling	
Mot. 991-01	Crankshaft oil seal fitting tool (flywheel end) (seal 85 x 105 x 8).

REMOVAL

I - REMOVAL PREPARATION OPERATION

❑ Position the vehicle on a two-post lift (see **Vehicle: Towing and lifting**) (02A, Lifting equipment).

> **IMPORTANT**
> To prevent the vehicle from falling, lash it to the vehicle lift using a strap.

❑ Remove:

- the engine undertray bolts,
- the engine undertray,
- the engine cover,
- the battery (see **Battery: Removal - Refitting**) (80A, Battery),
- the battery tray (see **Battery tray: Removal - Refitting**) (80A, Battery),
- the air filter unit (see **12A**, **Fuel mixture**, **Air filter unit: Removal - Refitting**, page **12A-4**) ,
- the hydraulic clutch control pipe (see **Clutch circuit: Removal - Refitting**) (37A, Mechanical component controls),
- the starter (see **16A**, **Starting - Charging**, **Starter: Removal - Refitting**, page **16A-16**) .

❑ Drain the manual gearbox oil (see **Manual gearbox oil: Draining - Refilling**) .

❑ Remove:

- the front wheels (see **Wheel: Removal - Refitting**) (35A, Wheels and tyres),
- the front section of the front wheel arch liners (see **Front wheel arch liner: Removal - Refitting**) (55A, Exterior protection),
- the front bumper (see **Front bumper: Removal - Refitting**) (55A, Exterior protection),
- the radiator mounting cross member (see **Radiator support cross member: Removal - Refitting**) (31A, Front axle components),
- the front right-hand wheel driveshaft (see **Front right-hand wheel driveshaft: Removal - Refitting**) (29A, Driveshafts),
- the front left-hand wheel driveshaft (see **Front left-hand wheel driveshaft: Removal - Refitting**) (29A, Driveshafts),
- the new differential output seals (see **Differential output seal: Removal - Refitting**) (21A, Manual gearbox),
- the lower engine tie-bar (see **19D**, **Engine mounting**, **Lower engine tie-bar: Removal - Refitting**, page **19D-33**) ,
- the front axle subframe (see **Front axle sub-frame: Removal - Refitting**) (31A, Front axle components),
- the windscreen wiper arms (see **Windscreen wiper arm: Removal - Refitting**) (85A, Wiping - Washing),
- the scuttle panel grille (see **Scuttle panel grille: Removal - Refitting**) (56A, Exterior equipment),
- the scoop under the scuttle panel grille (see **Scoop under scuttle panel grille: Removal - Refitting**) (56A, Exterior equipment),
- the left-hand suspended engine mounting (see **19D**, **Engine mounting**, **Left-hand suspended engine mounting: Removal - Refitting**, page **19D-1**) ,
- the manual gearbox (see **Manual gearbox: Removal - Refitting**) (21A, Manual gearbox).
- the « clutch pressure plate - disc » assembly (see **Mechanism / Disk: Removal - Refitting**) (20A, Clutch),
- the flywheel (see **10A**, **Engine and cylinder block assembly**, **Flywheel: Removal - Refitting**, page **10A-157**) .

F4R

II - OPERATION FOR REMOVAL OF PART CONCERNED

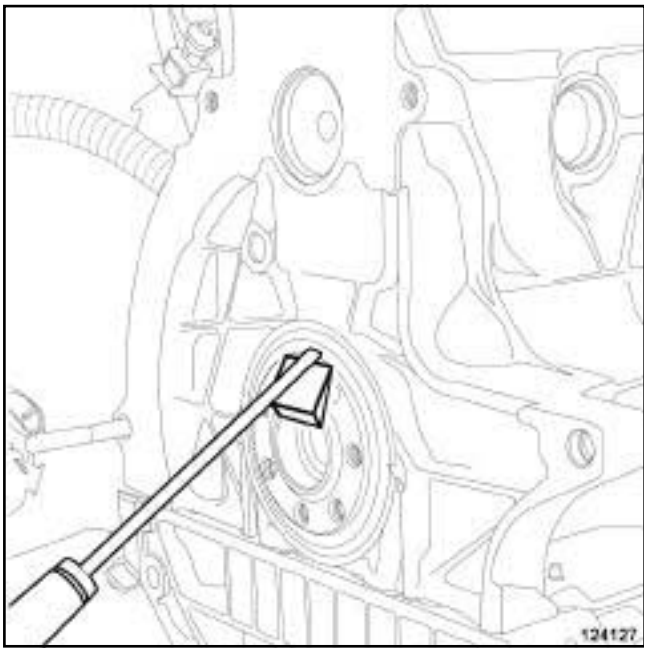

124127

❑ Remove the crankshaft seal on the gearbox side using a screwdriver and a wooden block.

> Note:
>
> Take care not to damage the crankshaft mating face.

REFITTING

I - REFITTING PREPARATION OPERATION

❑ **parts always to be replaced: Crankshaft seal on gearbox end (10,03,03,05)**.

❑ Use **SURFACE CLEANER** (see **Vehicle: Parts and ingredients for the repairwork**) (04B, Consumables - Products) to clean and degrease:

- the mating face of the crankshaft seal on the crankshaft at the gearbox end,
- the housing of the crankshaft seal on the cylinder block at the gearbox end.

> **WARNING**
>
> To ensure proper sealing, the gasket surfaces must be clean, dry and not greasy (avoid any finger marks).

II - REFITTING OPERATION FOR PART CONCERNED

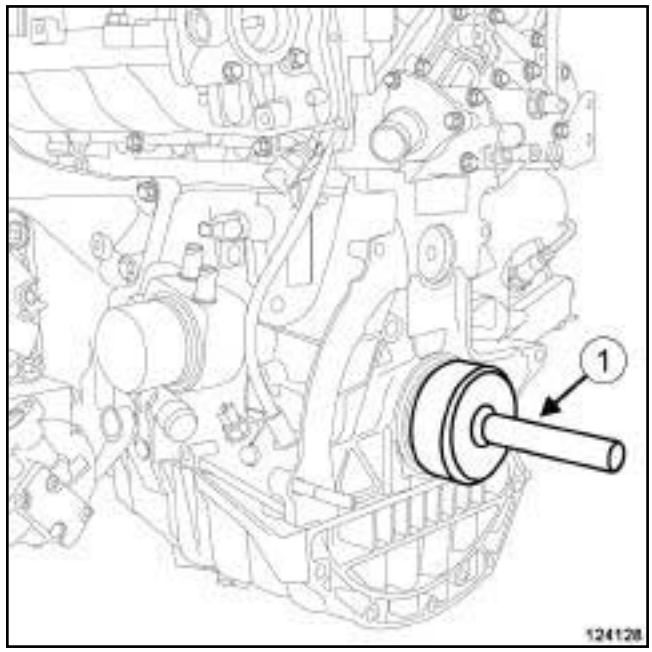

124128

❑ Refit a new crankshaft seal at the gearbox end, using the tool **(Mot. 991-01)** (**1**) .

III - FINAL OPERATION

❑ Refit:

- the flywheel (see **10A**, **Engine and cylinder block assembly**, **Flywheel: Removal - Refitting**, page **10A-157**) ,
- the « clutch pressure plate - disc » assembly (see **Mechanism / Disk: Removal - Refitting**) (20A, Clutch),
- the manual gearbox (see **Manual gearbox: Removal - Refitting**) (21A, Manual gearbox),
- the left-hand suspended engine mounting (see **19D**, **Engine mounting**, **Left-hand suspended engine mounting: Removal - Refitting**, page **19D-1**) ,
- the scoop under the scuttle panel grille (see **Scoop under scuttle panel grille: Removal - Refitting**) (56A, Exterior equipment),
- the scuttle panel grille (see **Scuttle panel grille: Removal - Refitting**) (56A, Exterior equipment),
- the windscreen wiper arms (see **Windscreen wiper arm: Removal - Refitting**) (85A, Wiping - Washing),
- the front axle subframe (see **Front axle sub-frame: Removal - Refitting**) (31A, Front axle components),

- the lower engine tie-bar (see **19D**, **Engine mounting**, **Lower engine tie-bar: Removal - Refitting**, page **19D-33**) ,
- the new differential output seals (see **Differential output seal: Removal - Refitting**) (21A, Manual gearbox),
- the front left-hand wheel driveshaft (see **Front left-hand wheel driveshaft: Removal - Refitting**) (29A, Driveshafts),
- the front right-hand wheel driveshaft (see **Front right-hand wheel driveshaft: Removal - Refitting**) (29A, Driveshafts),
- the radiator mounting cross member (see **Radiator support cross member: Removal - Refitting**) (31A, Front axle components),
- the front bumper (see **Front bumper: Removal - Refitting**) (55A, Exterior protection),
- the front section of the front wheel arch liners (see **Front wheel arch liner: Removal - Refitting**) (55A, Exterior protection),
- the front wheels (see **Wheel: Removal - Refitting**) (35A, Wheels and tyres),
- the starter (see **16A**, **Starting - Charging**, **Starter: Removal - Refitting**, page **16A-16**) ,
- the hydraulic clutch control pipe (see **Clutch circuit: Removal - Refitting**) (37A, Mechanical component controls).

❑ Perform the following operations:

- fill and top up the manual gearbox (see **Manual gearbox oil: Draining - Refilling**) (21A, Manual gearbox),
- bleed the hydraulic clutch control circuit (see **Clutch circuit: Bleeding**) (37A, Mechanical component controls).

❑ Refit:

- the air filter unit (see **12A**, **Fuel mixture**, **Air filter unit: Removal - Refitting**, page **12A-4**) ,
- the battery tray (see **Battery tray: Removal - Refitting**) (80A, Battery),
- the battery (see **Battery: Removal - Refitting**) (80A, Battery),
- the engine cover,
- the engine undertray.

K4M

Tightening torques ▽	
sump bolts on the cylinder block	**14 N.m**
sump bolts on the gearbox	**44 N.m**
bolt mounting the multi-function support on the sump	**25 N.m**
bolts 2 and 3 of the relay bearing	**44 N.m**
bolt 1 of the relay bearing	**44 N.m**
bolt 4 of the relay bearing flange	**21 N.m**
dipstick guide bolt on the lifting eye	**10 N.m**
dipstick guide bolts on the injector holder shim	**10 N.m**

IMPORTANT
Wear leaktight gloves (Nitrile type) for this operation.

REMOVAL

I - REMOVAL PREPARATION OPERATION

❑ Position the vehicle on a two-post lift (see **Vehicle: Towing and lifting**) (02A, Lifting equipment).

❑ Remove:

- the engine undertray bolts,
- the engine undertray.

K4M, and 848

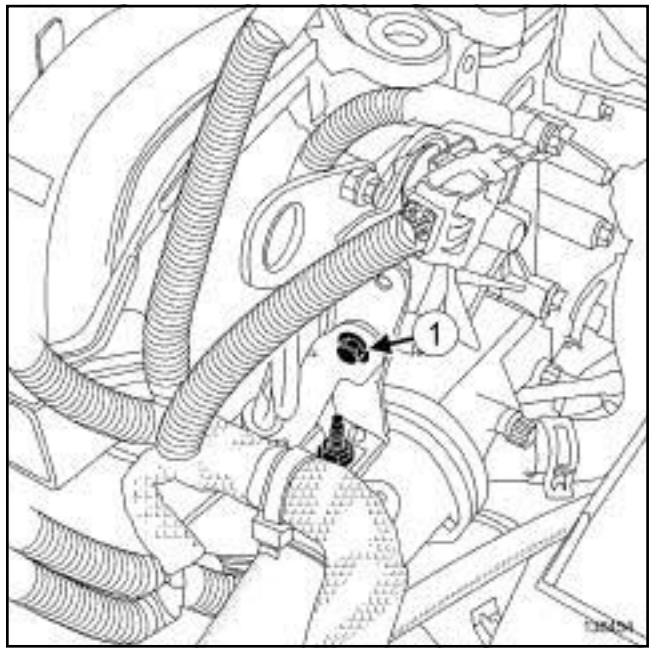

136454

❑ Remove:

- the dipstick guide bolt (**1**) from the lifting eye,
- the dipstick guide.

K4M

K4M, and 858 or 866

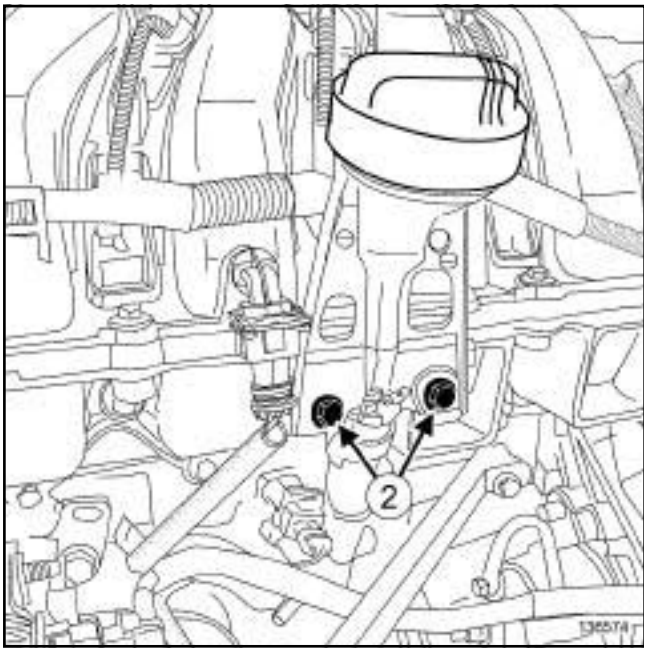

136574

❑ Remove:

- the dipstick guide bolts (**2**) from the injector holder shim,
- the dipstick guide.

❑ Drain the engine oil (see **10A**, **Engine and cylinder block assembly**, **Engine oil: Draining - Refilling**, page **10A-40**) .

II - OPERATION FOR REMOVAL OF PART CONCERNED

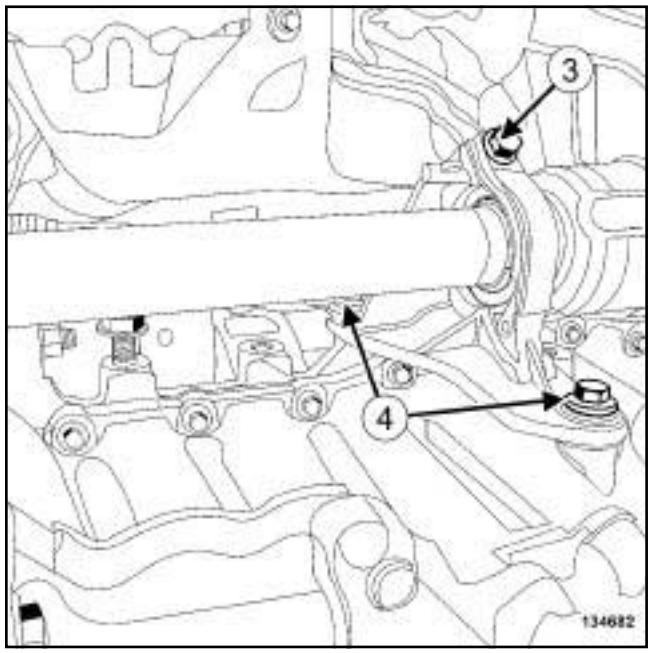

134682

❑ Remove:

- the bolt (**3**) from the relay bearing flange,
- the bolts (**4**) from the relay bearing,
- the relay bearing,
- the oil level sensor (see **10A**, **Engine and cylinder block assembly**, **Oil level sensor: Removal - Refitting**, page **10A-69**) .

K4M

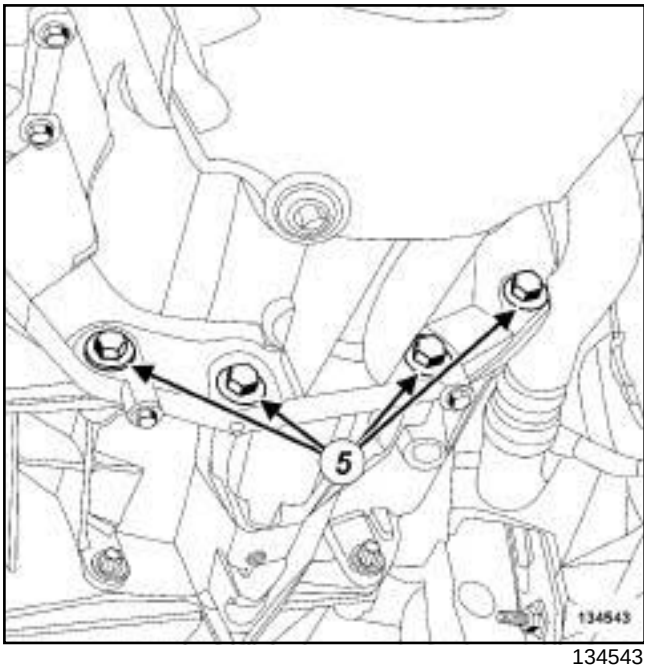

134543

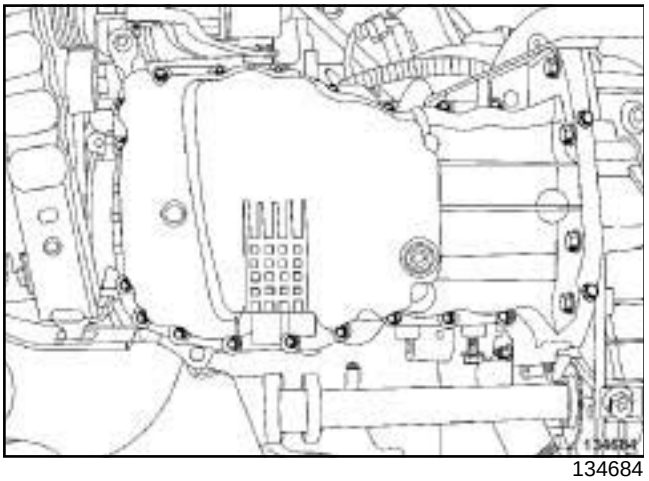
134684

❑

Note:

Prepare for the engine oil to drain out.

❑ Remove:

- the sump bolts (**5**) on the gearbox,
- the multifunction support bolt onto the sump,
- the sump bolts on the cylinder block,
- the sump,
- the sump seal.

REFITTING

I - REFITTING PREPARATION OPERATION

❑ **parts always to be replaced: Engine oil sump seal (10,03,01,09)**.

❑ Use **SURFACE CLEANER** (see **Vehicle: Parts and ingredients for the repairwork**) (04B, Consumables - Products) to clean and degrease:

- the sump joint face if it is to be reused,
- the cylinder block gasket face.

WARNING

To ensure proper sealing, the gasket surfaces must be clean, dry and not greasy (avoid any finger marks).

WARNING

Do not scrape the joint faces of the aluminium, any damage caused to the joint face will result in a risk of leaks.

K4M

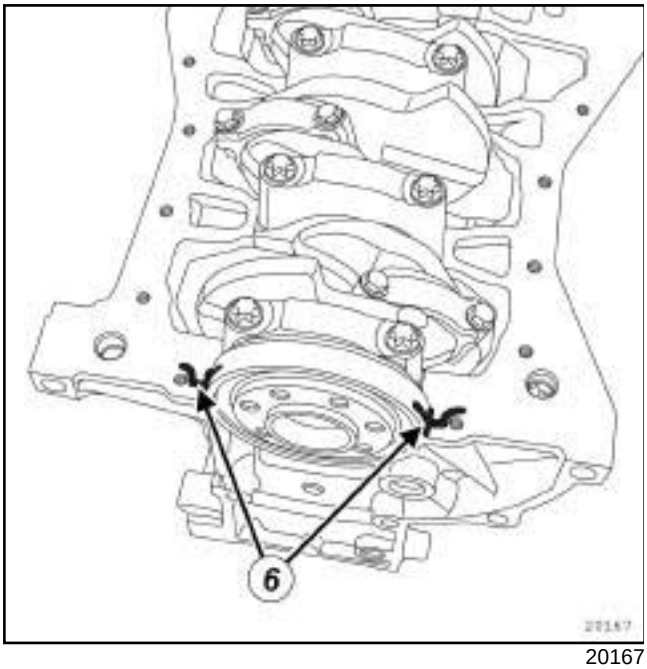

20167

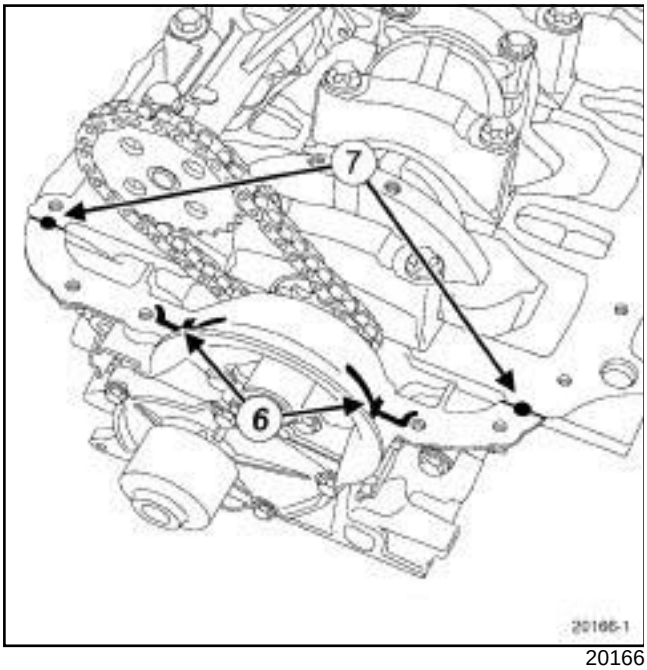

20166

❑ Use **MASTIXO** (see **Vehicle: Parts and ingredients for the repairwork**) (04B, Consumables - Products) to apply:

- a bead at (**6**) ,
- a drop at (**7**) at the joint between the cylinder block and crankshaft closure panel.

WARNING

Applying excess sealant could cause it to be squeezed out when parts are tightened. A mixture of sealant and fluid could damage certain components (engine, radiator, etc.).

II - REFITTING OPERATION FOR PART CONCERNED

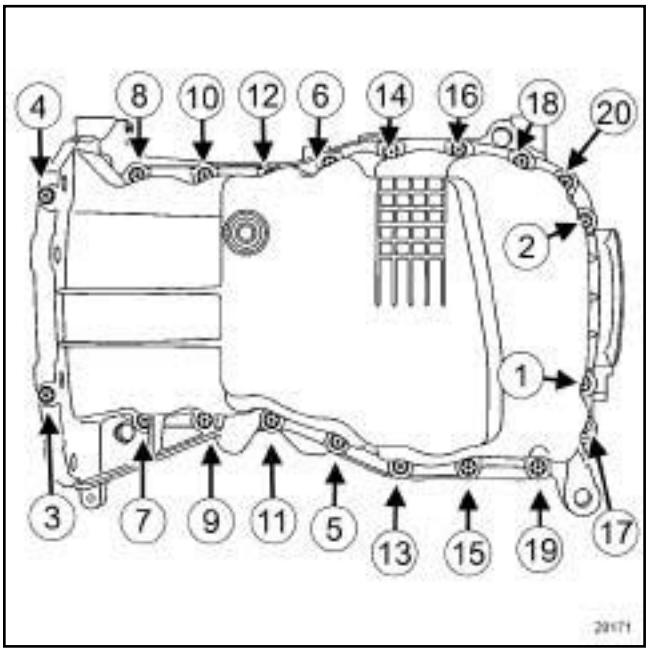

20171

❑ Refit:

- a new seal to the sump,
- the sump.

❑ Torque tighten in order the **sump bolts on the cylinder block (14 N.m)**.

❑ Tighten to torque:

- the **sump bolts on the gearbox (44 N.m)**,
- the **bolt mounting the multifunction support on the sump (25 N.m)**.

❑ Refit:

- the oil level sensor (see **10A**, **Engine and cylinder block assembly**, **Oil level sensor: Removal - Refitting**, page **10A-69**) ,
- the relay bearing.

K4M

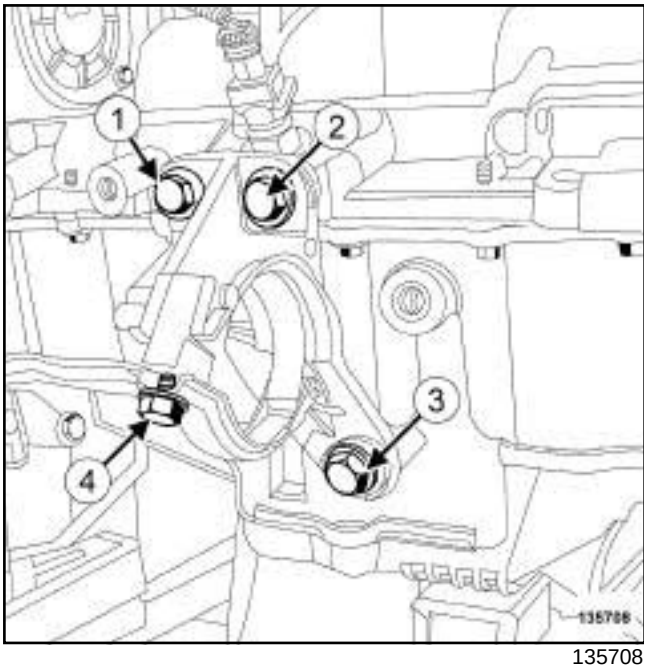

135708

- Fit the relay bearing bolt (**1**) without tightening it.
- Tighten to torque:
  - the **bolts 2 and 3 of the relay bearing (44 N.m)**,
  - the **bolt 1 of the relay bearing (44 N.m)**,
  - the **bolt 4 of the relay bearing flange (21 N.m)**.

K4M, and 848

- Refit the dipstick guide.
- Torque tighten the **dipstick guide bolt on the lifting eye (10 N.m)**.

K4M, and 858 or 866

- Refit the dipstick guide.
- Torque tighten the **dipstick guide bolts on the injector holder shim (10 N.m)**.

- Fill up the engine oil (see **10A**, **Engine and cylinder block assembly**, **Engine oil: Draining - Refilling**, page **10A-40**) .
- Refit the engine undertray.

F9Q

Tightening torques ▽	
sump bolts (A) to (F)	**18 N.m**
sump bolts (1) to (18)	**15 N.m**

REMOVAL

I - REMOVAL PREPARATION OPERATION

❑ Position the vehicle on a two-post lift (see **Vehicle: Towing and lifting**) (02A, Lifting equipment).

❑ Remove:

- the engine undertray bolts,
- the engine undertray.

❑ Drain the engine oil (see **10A**, **Engine and cylinder block assembly**, **Engine oil: Draining - Refilling**, page **10A-40**) .

❑ Remove the engine tie-bar (see **19D**, **Engine mounting**, **Lower engine tie-bar: Removal - Refitting**, page **19D-33**) .

II - OPERATION FOR REMOVAL OF PART CONCERNED

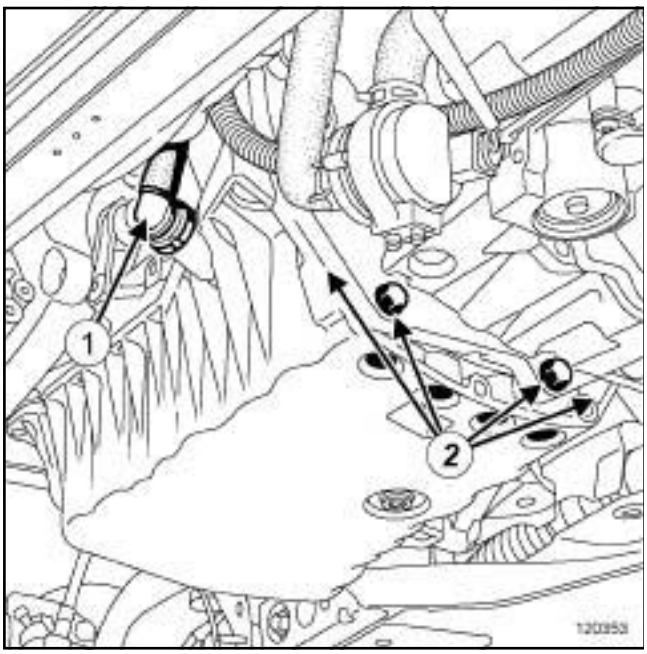

120353

❑ Disconnect the oil vapour rebreathing pipe (**1**) from the sump.

❑ Remove:

- the sump bolts (**2**) on the gearbox,
- the sump bolts on the cylinder block,
- the sump,
- the sump seal.

REFITTING

I - REFITTING PREPARATION OPERATION

❑ Always replace the sump gasket.

> **WARNING**
> Do not scrape the joint faces of the aluminium, any damage caused to the joint face will result in a risk of leaks.

❑ Clean the cylinder block joint face using **SUPER CLEANING AGENT FOR JOINT FACES** (see **Vehicle: Parts and ingredients for the repairwork**) (04B, Consumables - Products).

> **WARNING**
> To ensure proper sealing, the gasket surfaces must be clean, dry and not greasy (avoid any finger marks).

❑ Use **SURFACE CLEANER** (see **Vehicle: Parts and ingredients for the repairwork**) (04B, Consumables - Products) to degrease:

- the sump joint face if it is to be reused,
- the cylinder block gasket face.

> **WARNING**
> Applying excess sealant could cause it to be squeezed out when parts are tightened. A mixture of sealant and fluid could damage certain components (engine, radiator, etc.).

F9Q

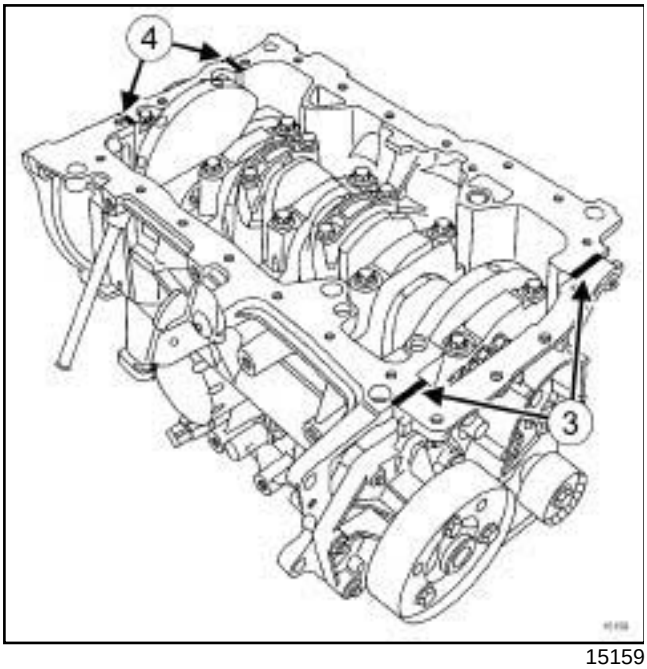

15159

❑

> Note:
>
> Do not cut the two tabs on the crankshaft closure panel seal, which sit higher than the cylinder block gasket face (**3**) .

❑ Apply a **BEAD OF SILICONE ADHESIVE SEALANT** (see **Vehicle: Parts and ingredients for the repairwork**) (04B, Consumables - Products) to each side of bearing No. 1 at (**4**) .

II - REFITTING OPERATION FOR PART CONCERNED

❑ Refit:

- a new seal to the sump,
- the sump.

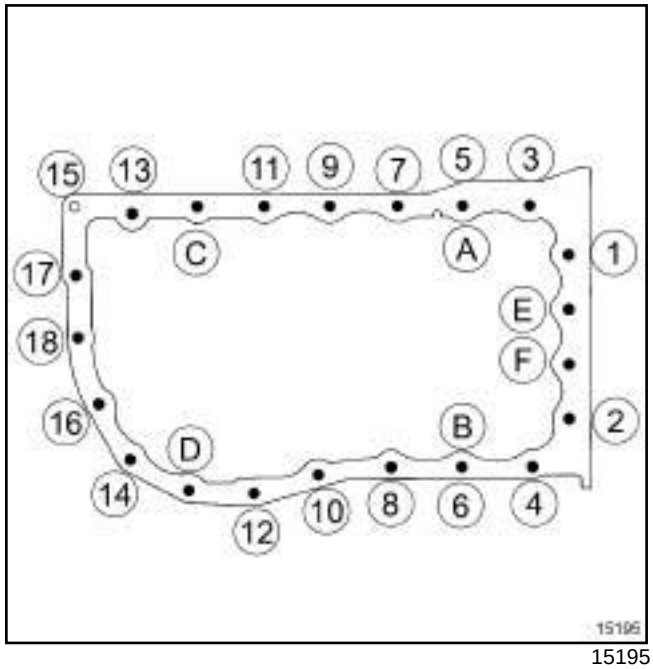

15195

❑ Tighten to torque and in order:

- the **sump bolts (A) to (F) (18 N.m)**,
- the **sump bolts (1) to (18) (15 N.m)**.

❑ Connect the oil vapour rebreathing pipe to the sump.

III - FINAL OPERATION

❑ Refit the engine tie-bar (see **19D**, **Engine mounting**, **Lower engine tie-bar: Removal - Refitting**, page **19D-33**) .

❑ Fill up with engine oil (see **10A**, **Engine and cylinder block assembly**, **Engine oil: Draining - Refilling**, page **10A-40**) ,

❑ Refit the engine undertray.

F4R

Tightening torques ▽	
sump bolts	**15 N.m**
sump bolts on the manual gearbox	**44 N.m**
lower engine tie-bar support bolts	**62 N.m**

REMOVAL

I - REMOVAL PREPARATION OPERATION

❑ Position the vehicle on a two-post lift (see **Vehicle: Towing and lifting**) (02A, Lifting equipment).

❑ Remove:

- the engine undertray bolts,
- the engine undertray.
- the lower engine tie-bar (see **19D**, **Engine mounting**, **Lower engine tie-bar: Removal - Refitting**, page **19D-33**) .

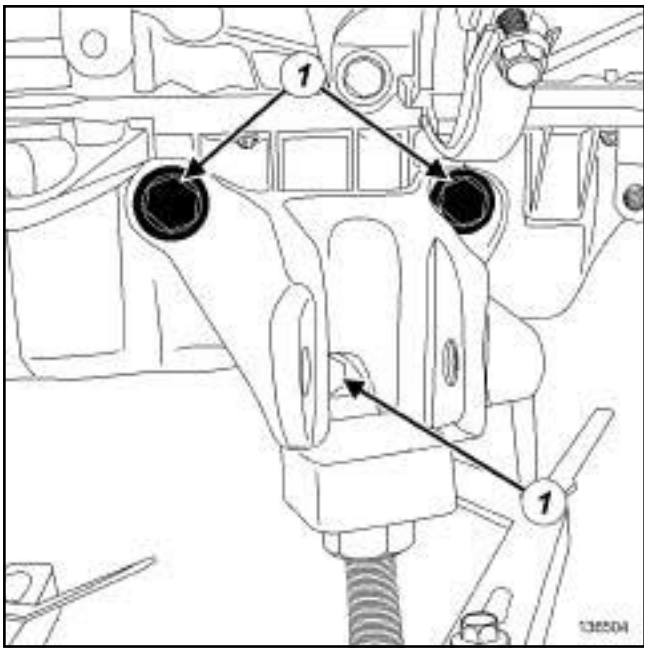

136504

❑ Remove:

- the lower engine tie-bar support bolts on the sump,
- the lower engine tie-bar support on the sump.

❑ Drain the engine oil (see **10A**, **Engine and cylinder block assembly**, **Engine oil: Draining - Refilling**, page **10A-40**) .

II - OPERATION FOR REMOVAL OF PART CONCERNED

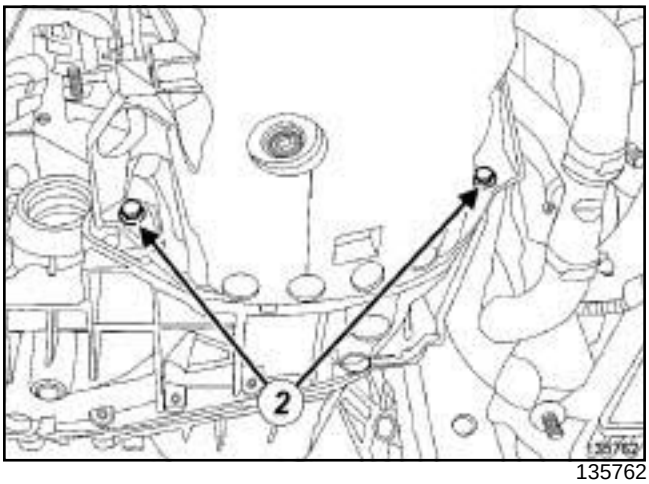

135762

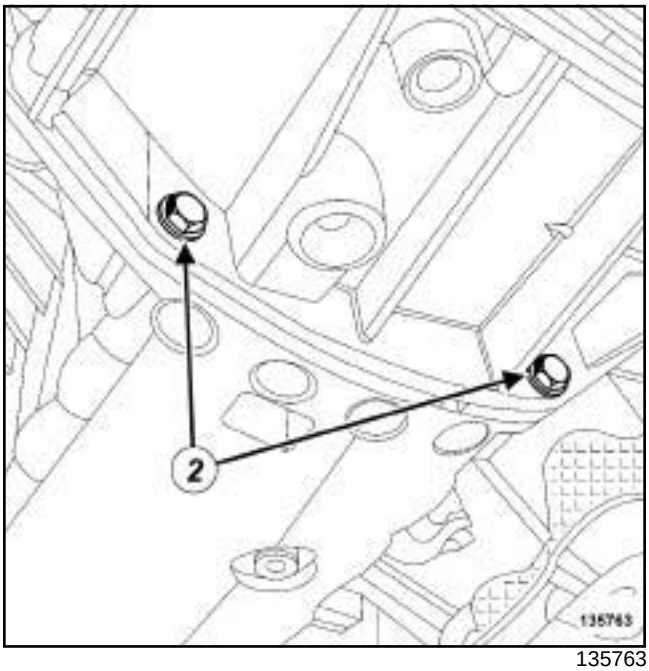

135763

❑ Remove the bolts (**2**) from the sump on the manual gearbox.

F4R

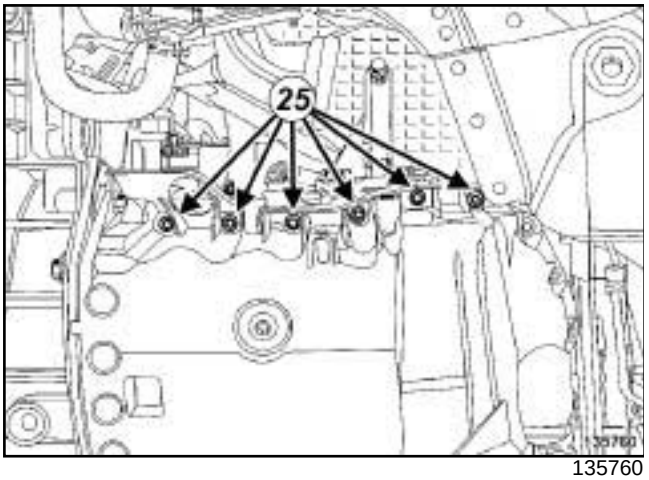

135760

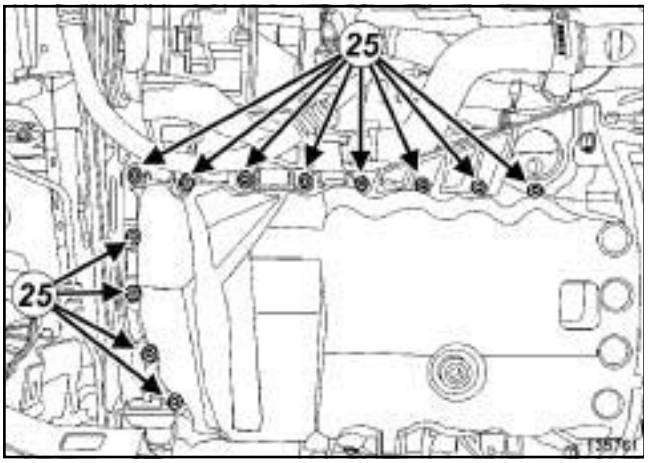

135761

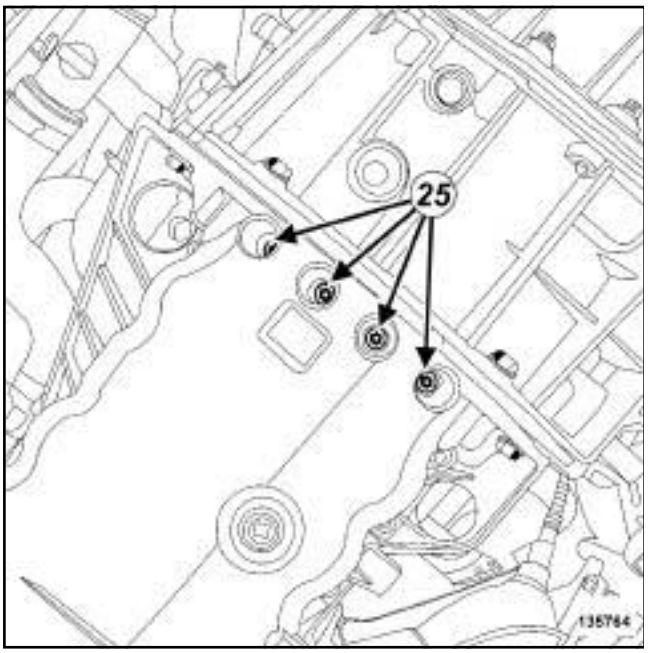

135764

❑

WARNING
Prepare for the flow of fluid, and protect the surrounding components.

❑ Remove:

- the sump bolts on the cylinder block,
- the sump,
- the sump seal.

REFITTING

I - REFITTING PREPARATION OPERATION

❑ **parts always to be replaced: Engine oil sump seal (10,03,01,09)**.

WARNING
Do not scrape the joint faces of the aluminium, any damage caused to the joint face will result in a risk of leaks.

WARNING
To ensure proper sealing, the gasket surfaces must be clean, dry and not greasy (avoid any finger marks).

❑ Use **SURFACE CLEANER** (see **Vehicle: Parts and ingredients for the repairwork**) (04B, Consumables - Products) to clean and degrease:

- the sump joint face if it is to be reused,
- the cylinder block gasket face.

F4R

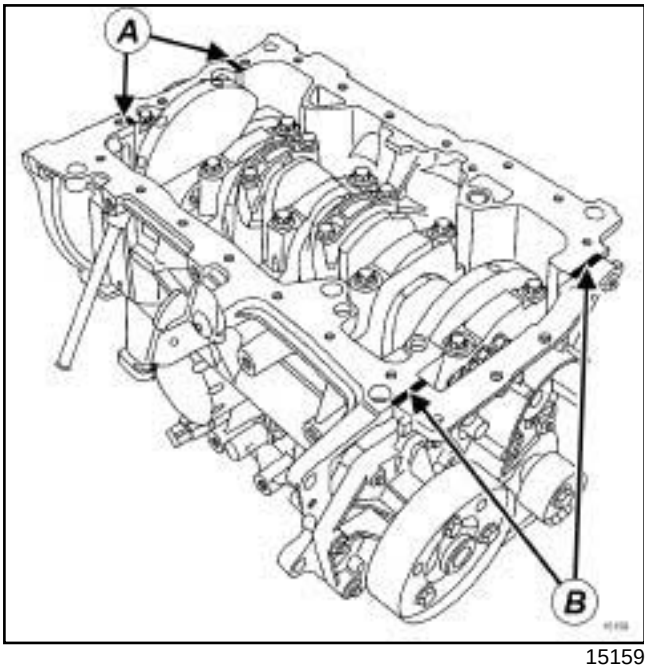

15159

❑ Apply a bead of **MASTIXO** (see **Vehicle: Parts and ingredients for the repairwork**) (04B, Consumables - Products):

- at (**A**) on each side of bearing no.1,
- at (**B**) at the joint between the cylinder block and crankshaft closure panel.

WARNING

Applying excess sealant could cause it to be squeezed out when parts are tightened. A mixture of sealant and fluid could damage certain components (engine, radiator, etc.).

II - REFITTING OPERATION FOR PART CONCERNED

❑ Refit:

- a new seal to the sump,
- the sump.

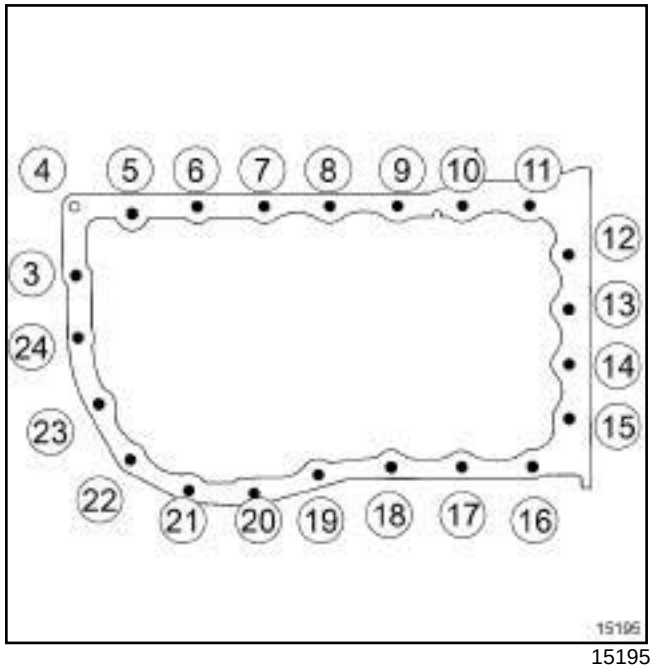

15195

❑ Tighten to torque and in order:

- the **sump bolts (15 N.m)**,
- the **sump bolts on the manual gearbox (44 N.m)**.

❑ Refit the lower engine tie-bar support.

❑ Torque tighten the **lower engine tie-bar support bolts (62 N.m)**.

III - FINAL OPERATION

❑ Refit:

- the lower engine tie-bar (see **19D**, **Engine mounting**, **Lower engine tie-bar: Removal - Refitting**, page **19D-33**) ,
- the engine undertray.

❑ Fill up the engine oil, observing the quantity of oil recommended by the manufacturer (see **10A**, **Engine and cylinder block assembly**, **Engine oil: Draining - Refilling**, page **10A-40**) .

❑ Check the oil level using the dipstick.

❑ Adjust the engine oil level if necessary.

K9K

Tightening torques ▽	
sump bolts	**14 N.m**
sump bolts on the gear-box	**44 N.m**
catalytic converter ups-tream strut bolt on the cylinder block	**50 N.m**
catalytic converter ups-tream strut bolts on the catalytic converter	**26 N.m**
multifunction support lower bolt	**25 N.m**
front right-hand wheel driveshaft relay bearing bolts	**44 N.m**

IMPORTANT
Wear leaktight gloves (Nitrile type) for this opera-tion.

REMOVAL

I - REMOVAL PREPARATION OPERATION

❑ Position the vehicle on a two-post lift (see **Vehicle: Towing and lifting**) (02A, Lifting equipment).

❑ Remove:

- the engine cover,
- the dipstick,
- the engine undertray bolts,
- the engine undertray.

❑ Drain the engine oil (see **10A**, **Engine and cylinder block assembly**, **Engine oil: Draining - Refilling**, page **10A-40**) .

❑ Remove the lower engine tie-bar (see **19D**, **Engine mounting**, **Lower engine tie-bar: Removal - Refit-ting**, page **19D-33**) .

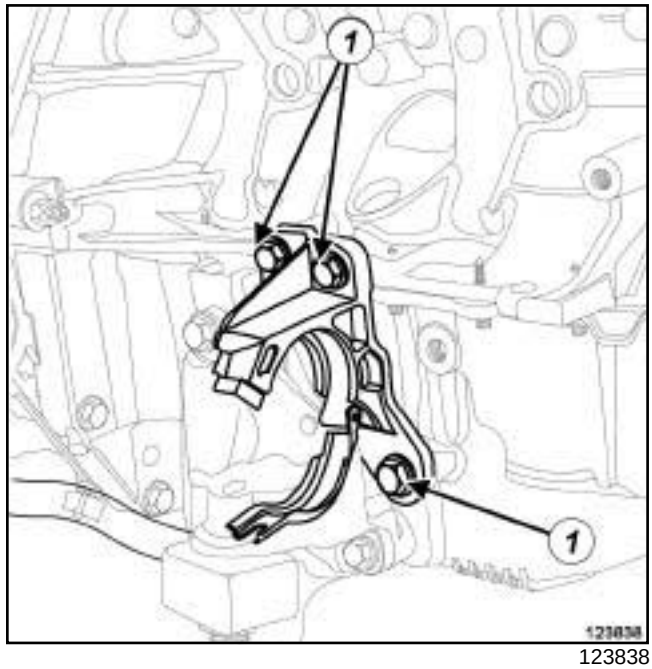

123838

❑ Remove:

- the bolts (**1**) from the front right-hand wheel drives-haft relay bearing,
- the front right-hand wheel driveshaft relay bearing.

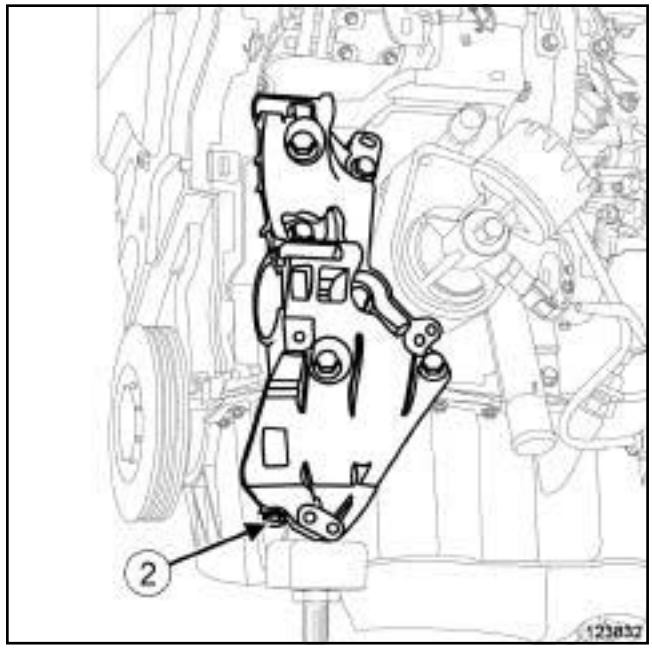

123832

❑ Remove the lower bolt (**2**) from the multifunction support.

K9K

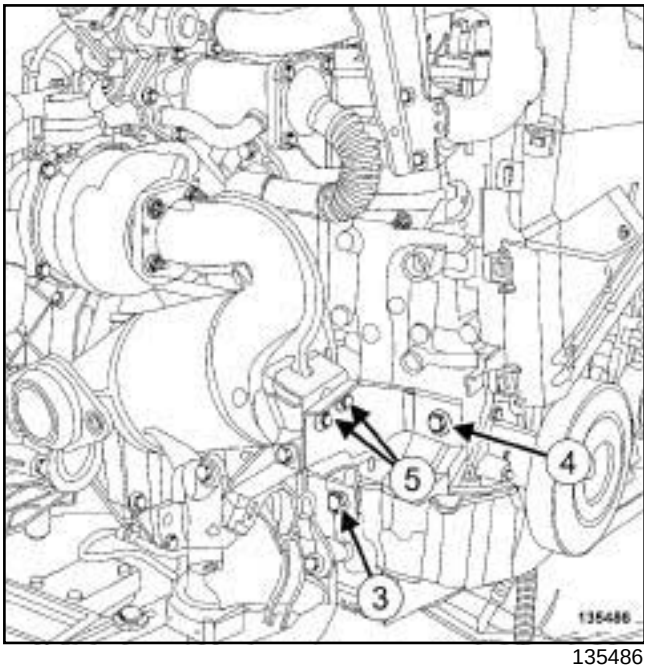

135486

- ❑ Undo the bolt (**3**) of the catalytic converter upstream strut from the sump.
- ❑ Remove:
  - the bolt (**4**) of the catalytic converter upstream strut from the cylinder block,
  - the bolt (**5**) of the catalytic converter upstream strut from the catalytic converter,
  - the catalytic converter upstream strut.
- ❑ Unclip the drain pipe from the injector rail protector:
  - from the gearbox,
  - from the sump.
- ❑ Move the injector rail protector drain pipe away from the sump.

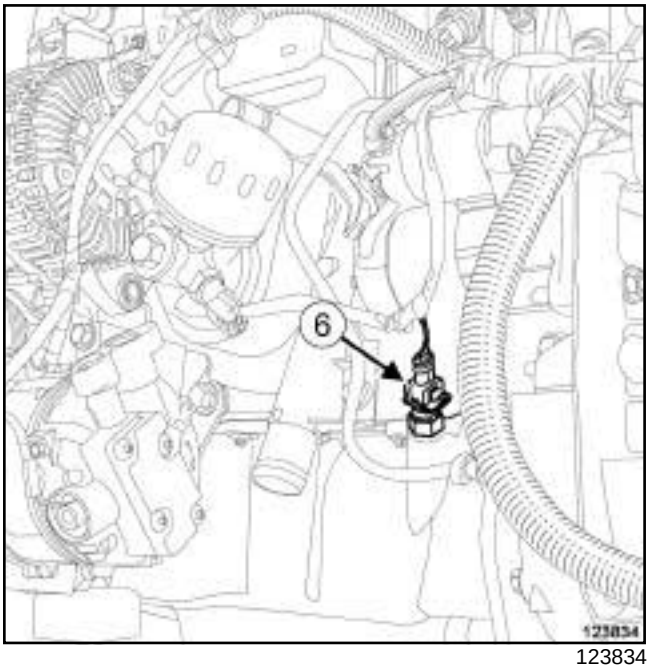

123834

- ❑ Disconnect the connector (**6**) from the oil level sensor.

K9K

II - OPERATION FOR REMOVAL OF PART CONCERNED

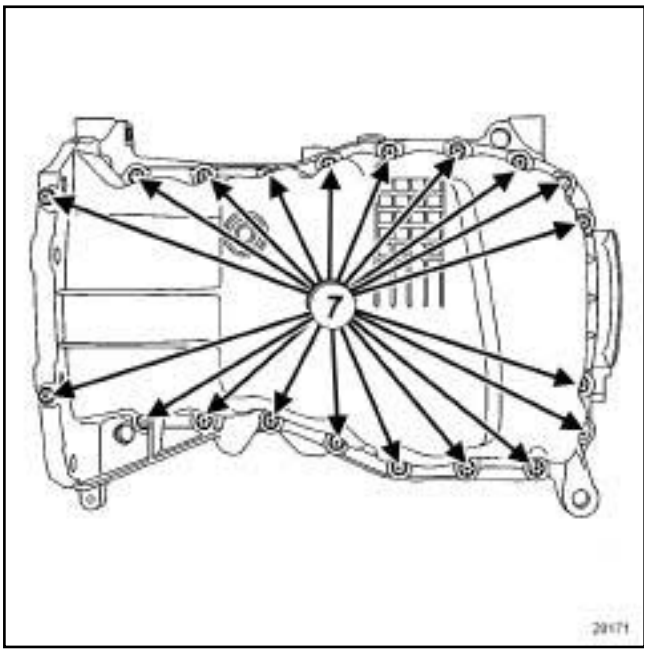

20171

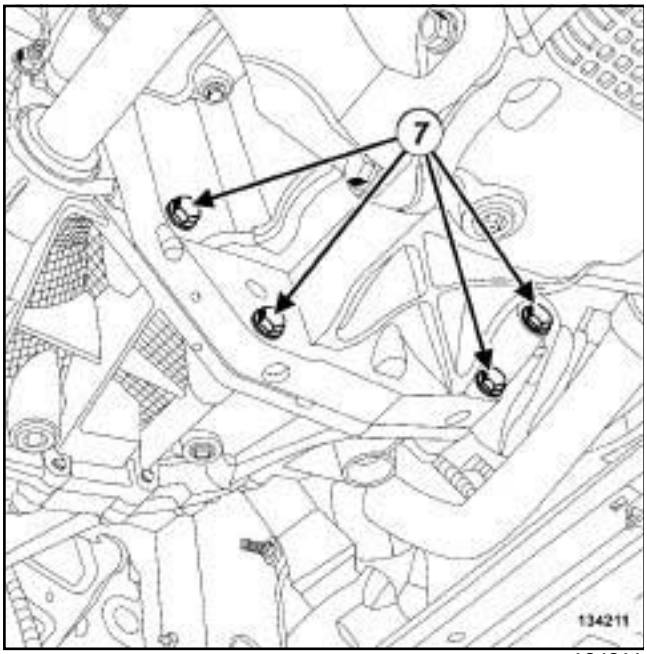

134211

❑ Remove:

- the bolts (**7**) from the sump,
- the sump,
- the sump seal.

REFITTING

I - REFITTING PREPARATION OPERATION

❑ Wipe the oil pump strainer with a **CLEAN CLOTH**.

> **IMPORTANT**
> Wear goggles with side protectors for this operation.

> **WARNING**
> Do not scrape the joint faces of the aluminium, any damage caused to the joint face will result in a risk of leaks.

> **WARNING**
> To ensure proper sealing, the gasket surfaces must be clean, dry and not greasy (avoid any finger marks).

> **WARNING**
> Applying excess sealant could cause it to be squeezed out when parts are tightened. A mixture of sealant and fluid could damage certain components (engine, radiator, etc.).

❑ Clean the cylinder block gasket face using **SUPER CLEANING AGENT FOR JOINT FACES** (see **Vehicle: Parts and ingredients for the repairwork**) (04B, Consumables - Products) and **ABRASIVE PADS**.

❑ Use **SURFACE CLEANER** (see **Vehicle: Parts and ingredients for the repairwork**) (04B, Consumables - Products) to degrease:

- the cylinder block gasket face,
- the sump joint face if it is to be reused.

❑ **parts always to be replaced: Engine oil sump seal (10,03,01,09)**.

K9K

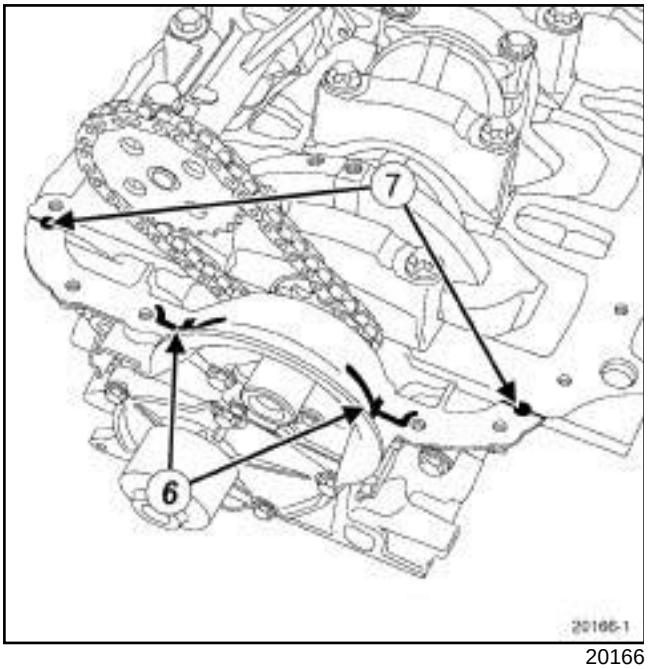

20166

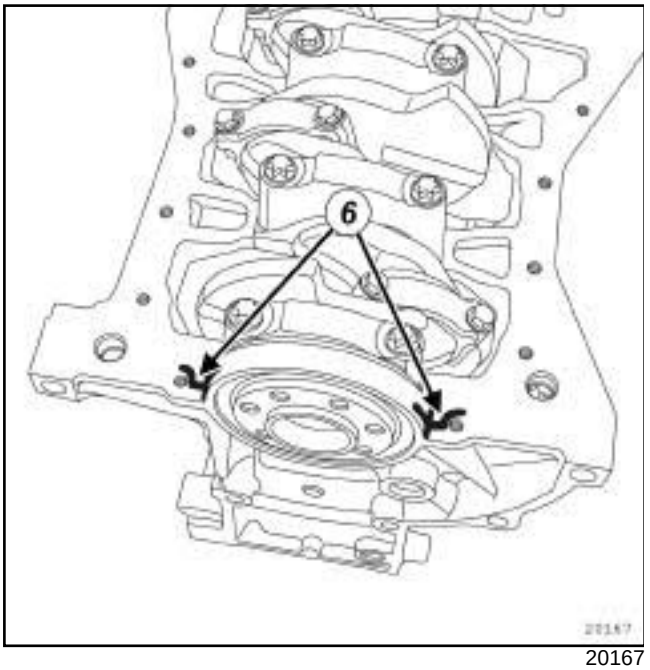

20167

❑ Apply:

- four beads of **SILICONE ADHESIVE SEALANT** (**6**) (see **Vehicle: Parts and ingredients for the repairwork**) (04B, Consumables - Products) with a diameter of **5 mm** and a length of **12 mm,**
- two drops of **SILICONE ADHESIVE SEALANT** (**7**) (see **Vehicle: Parts and ingredients for the repairwork**) (04B, Consumables - Products) with a diameter of **5 mm.**

If replacing the sump

❑ Remove the oil level sensor from the sump.

❑ Refit the oil level sensor to the new sump.

II - REFITTING OPERATION FOR PART CONCERNED

❑ Fit:

- a new sump seal to the sump,
- the sump fitted with a new seal.

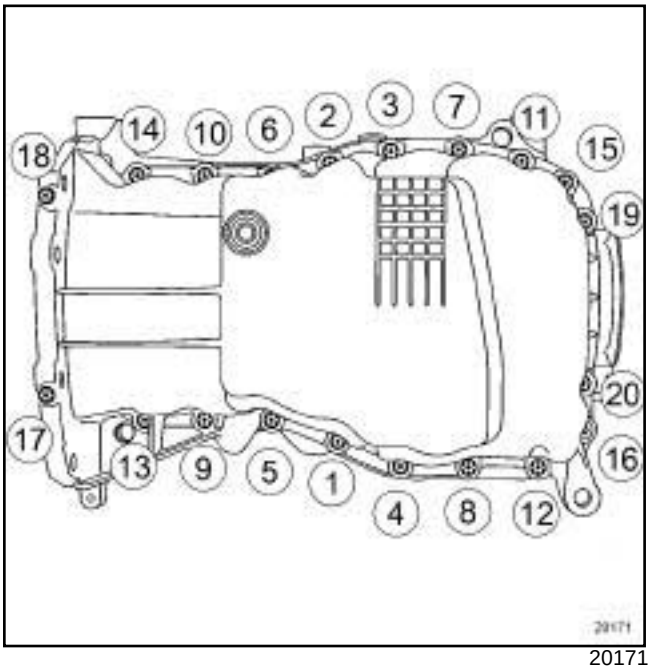

20171

❑ Refit:

- the sump bolts to the cylinder block in the correct order,
- the sump bolts on the gearbox.

❑ Tighten to torque:

- and in order, the **sump bolts (14 N.m)**,
- the **sump bolts on the gearbox (44 N.m)**.

III - FINAL OPERATION

❑ Connect the connector to the oil level sensor.

❑ Fit the injector rail protector drain pipe.

❑ Clip the injector rail protector drain pipe onto:

- the sump,
- the gearbox.

❑ Refit the catalytic converter upstream strut.

❑ Tighten to torque:

- the **catalytic converter upstream strut bolt on the cylinder block (50 N.m)**,

K9K

- the **catalytic converter upstream strut bolts on the catalytic converter (26 N.m)**.

❏ Tighten the catalytic converter upstream strut bolt on the sump.

❏ Torque tighten the **multifunction support lower bolt (25 N.m)**.

❏ Refit the relay bearing of the front right-hand wheel driveshaft.

❏ Torque tighten the **front right-hand wheel drives-haft relay bearing bolts (44 N.m)**.

❏ Refit the lower engine tie-bar (see **19D**, **Engine mounting**, **Lower engine tie-bar: Removal - Refitting**, page **19D-33**) .

❏ Fill up the engine oil (see **10A**, **Engine and cylinder block assembly**, **Engine oil: Draining - Refilling**, page **10A-40**) .

❏ Refit:

- the engine undertray,
- the dipstick,
- the engine cover.

K9K

Essential special tooling	
Mot. 1018	Sump plug tool.

Essential equipment
oil recovery container
oil draining wrench
torque wrench
8 mm square drain plug socket

Tightening torques ▽	
the drain plug	**20 N.m**

Engine	Average oil capacity (adjusting using dipstick) (l)	
	Oil change without filter replacement	**Oil change with filter replacement**
K9K	4.4	4.5

I - RECOMMENDATIONS FOR REPAIR

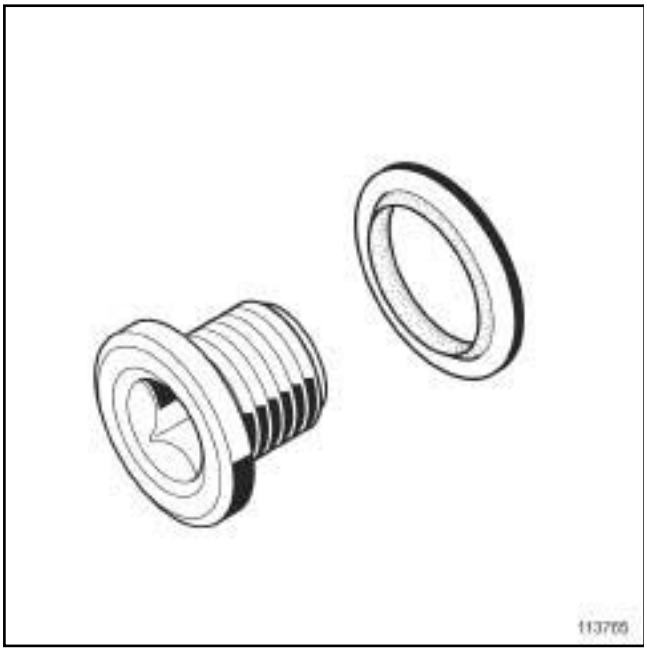

113765

❑ There is no direction of fitting for a seal fitted with a rubber lip.

❑

IMPORTANT

Wear leaktight gloves (Nitrile type) for this operation.

WARNING

Always check the oil level using the dipstick.

Do not exceed the maximum level on the dipstick (could destroy the engine).

Correct the engine oil level if necessary before delivering the vehicle to the customer.

Note:

When topping up the engine oil, always leave at least **10 minutes** before checking the level with a dipstick.

II - PARTS AND CONSUMABLES FOR THE REPAIR

❑ **parts always to be replaced: Engine oil sump drain plug seal (10,03,01,04)**.

❑ Consumable:

- Engine oil (see **Engine oil: Specifications**) (Technical Note 6013A, 04A, Lubricants).

III - OIL SERVICE

❑ Position the vehicle on a two-post lift (see **Vehicle: Towing and lifting**) (02A, Lifting equipment).

K9K

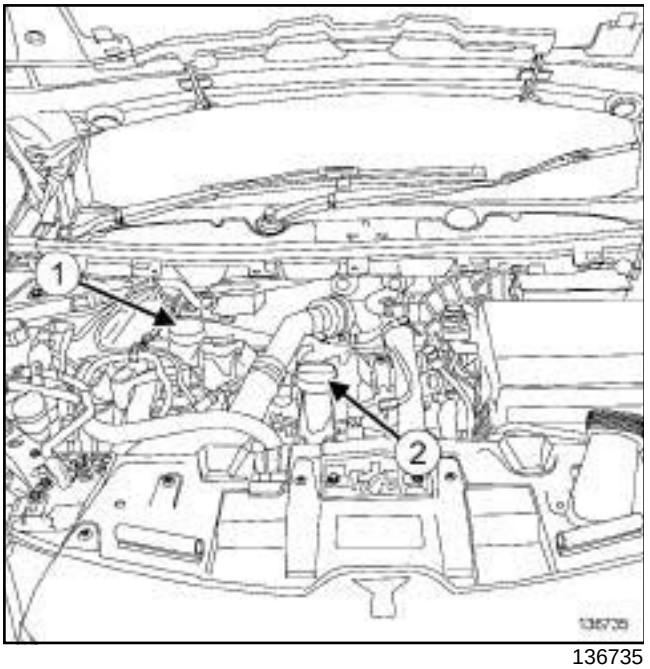

136735

❑ Remove:

- the engine oil filler cap (**1**) ,
- the dipstick (**2**) ,
- the engine undertray bolts,
- the engine undertray.

❑ Place the **oil recovery container** under the engine.

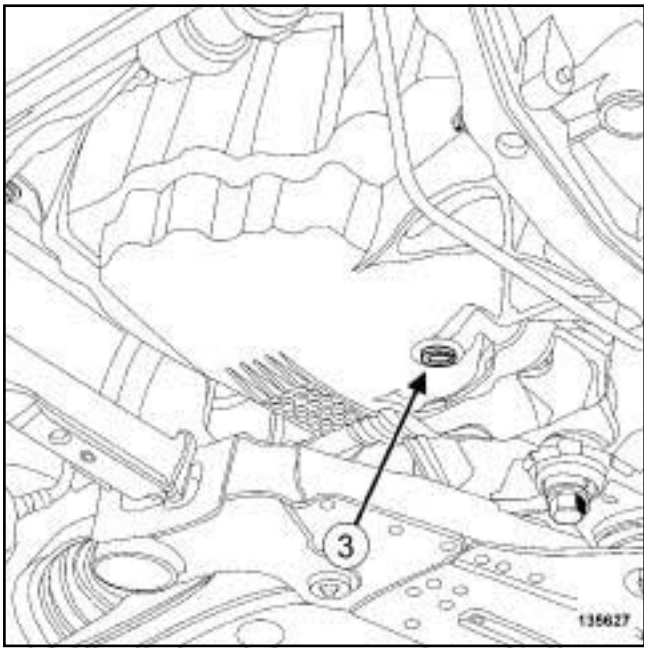

135627

❑ Remove the drain plug (**3**) from the engine oil sump using the tool **(Mot. 1018)** or a **oil draining wrench**.

❑ Let the engine oil flow out.

❑ Remove the drain plug seal.

❑ Refit a new seal on the drain plug.

❑ Screw the drain plug onto the engine oil sump.

❑ Torque tighten **the drain plug (20 N.m)** using a **torque wrench** and a **8 mm square drain plug socket**.

❑ Use a cloth to wipe away any oil drips on the engine oil sump.

❑ Remove the **oil recovery container**.

❑ Refit the engine undertray.

IV - FILLING

❑ Position the vehicle back on the ground.

❑ Fill with engine oil, observing the type of engine oil recommended by the manufacturer (see **Engine oil: Specifications**) (Technical Note 6013A, 04A, Lubricants).

❑ Wait at least **10 minutes**.

❑ Check the oil level using the dipstick.

❑ Top up the engine oil level if necessary.

❑ Refit:

- the engine oil filler cap,
- the dipstick.

Engine oil: Draining - Refilling

F4R

Essential special tooling	
Mot. 1018	Sump plug tool.

Essential equipment
oil recovery container

Tightening torques ▽	
drain plug	**20 N.m**

Engine	Average oil capacity (adjust using dipstick) (litres)	
	Draining	**Oil change with oil filter replacement**
F4R	5.25	5.4

I - RECOMMENDATIONS FOR REPAIR

❑

WARNING

Always check the oil level using the dipstick.

Do not exceed the maximum level on the dipstick (could destroy the engine).

Correct the engine oil level if necessary before delivering the vehicle to the customer.

Note:

When topping up the engine oil, always leave at least **10 minutes** before checking the level with a dipstick.

II - PARTS AND CONSUMABLES FOR THE REPAIR

❑ **parts always to be replaced: Engine oil sump drain plug seal (10,03,01,04)**.

❑ Consumable:

- Engine oil (see **Engine oil: Specifications**) (Technical Note 6013A, 04A, Lubricants).

III - OIL SERVICE

❑ Position the vehicle on a two-post lift (see **Vehicle: Towing and lifting**) (02A, Lifting equipment).

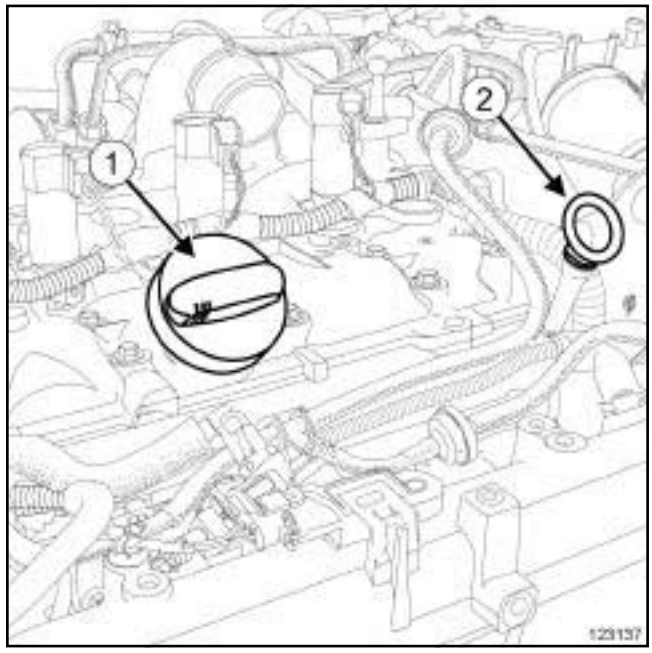

123137

❑ Remove:

- the engine cover,
- the engine oil filler cap (**1**) ,
- the dipstick (**2**) ,
- the engine undertray bolts,
- the engine undertray.

F4R

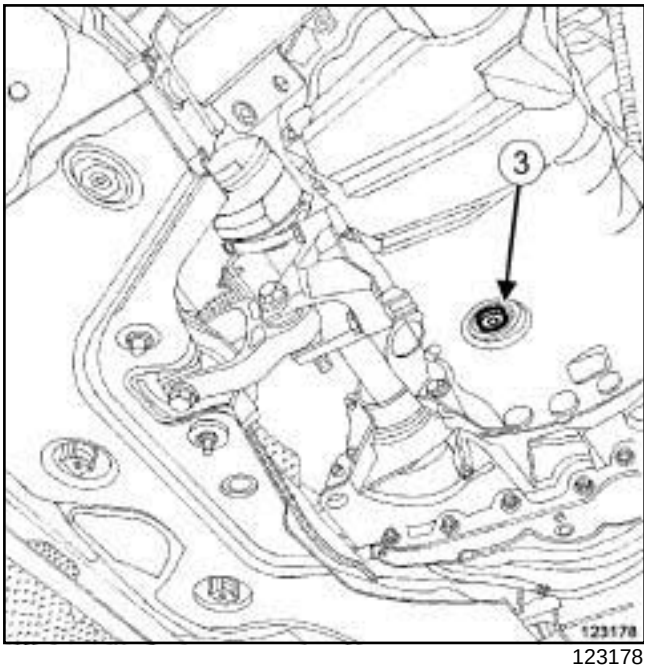

123178

❏ Place the **oil recovery container** under the engine.

❏ Remove:

- the drain plug (**3**) from the engine oil sump using the **(Mot. 1018)**,
- the sump drain plug seal.

❏ Let the engine oil flow out.

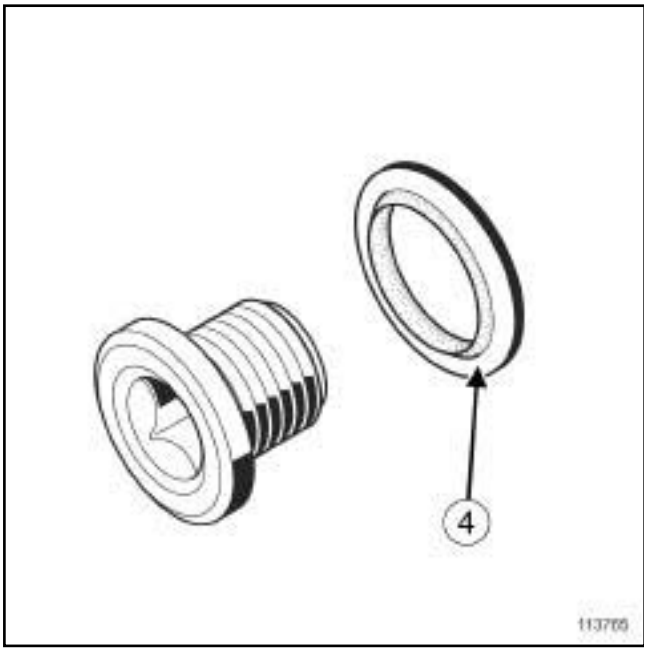

113765

❏ Refit:

- a new seal (**4**) on the sump drain plug,
- the drain plug on the sump.

❏ Torque tighten the **drain plug (20 N.m)**.

❏ Clean the traces of oil around the drain plug so that any possible leaks can be detected.

❏ Remove the **oil recovery container**.

IV - FILLING

❏ Position the vehicle back on the ground.

❏ Fill the engine with oil, observing the recommended amount.

❏ Wait for at least **10 minutes**.

❏ Check the oil level using the dipstick.

❏ Adjust the engine oil level if necessary.

❏ Refit:

- the engine oil filler cap,
- the dipstick,
- the engine cover,
- the engine undertray.

Engine oil: Draining - Refilling

K4M

Essential special tooling	
Mot. 1018	Sump plug tool.

Essential equipment
oil recovery container

Tightening torques ▽	
drain plug	**20 N.m**

Engine	Average oil capacity (adjust using dipstick) (litres)	
	Draining	**Oil change plus oil filter replacement**
K4M	4.7	4.8

I - RECOMMENDATIONS FOR REPAIR

❑

WARNING

Always check the oil level using the dipstick.

Do not exceed the maximum level on the dipstick (could destroy the engine).

Correct the engine oil level if necessary before delivering the vehicle to the customer.

Note:

When filling up the engine oil, always leave at least **10 minutes** for the oil to drain down before checking the level with a dipstick.

II - PARTS AND CONSUMABLES FOR THE REPAIR

❑ **parts always to be replaced: Engine oil sump drain plug seal (10,03,01,04)**.

❑ Consumable:

- Engine oil (see **Engine oil: Specifications**) (Technical Note 6013A, 04A, Lubricants).

III - DRAINING

❑ Position the vehicle on a two-post lift (see **Vehicle: Towing and lifting**) (02A, Lifting equipment).

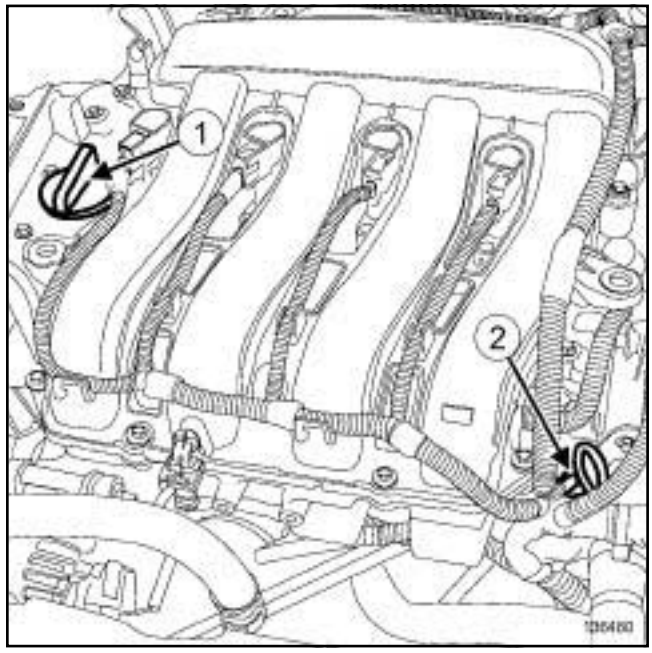

136480

❑ Remove:

- the engine cover,
- the engine oil filler cap (**1**) ,
- the dipstick (**2**) .

K4M

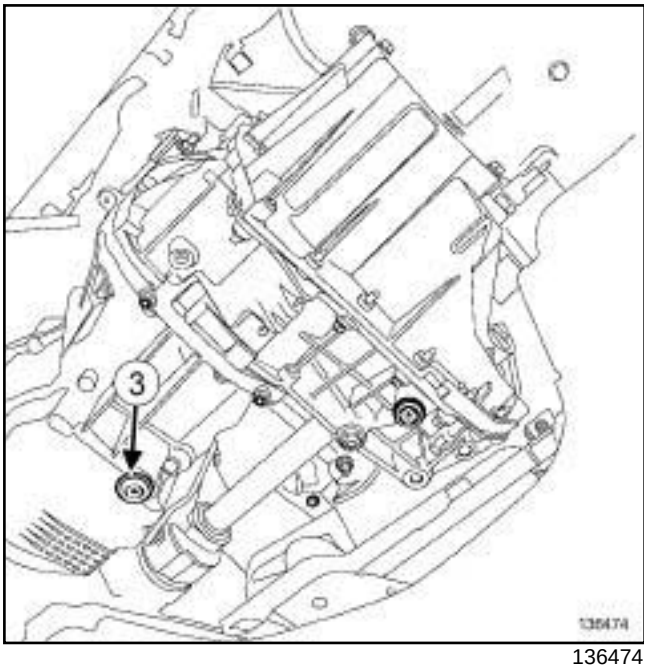

136474

❑ Remove:

- the engine undertray bolts,
- the engine undertray.

❑ Place the **oil recovery container** under the engine.

❑ Remove:

- the drain plug (**3**) from the engine oil sump using the **(Mot. 1018)**,
- the engine oil sump drain plug seal.

❑ Let the engine oil flow out.

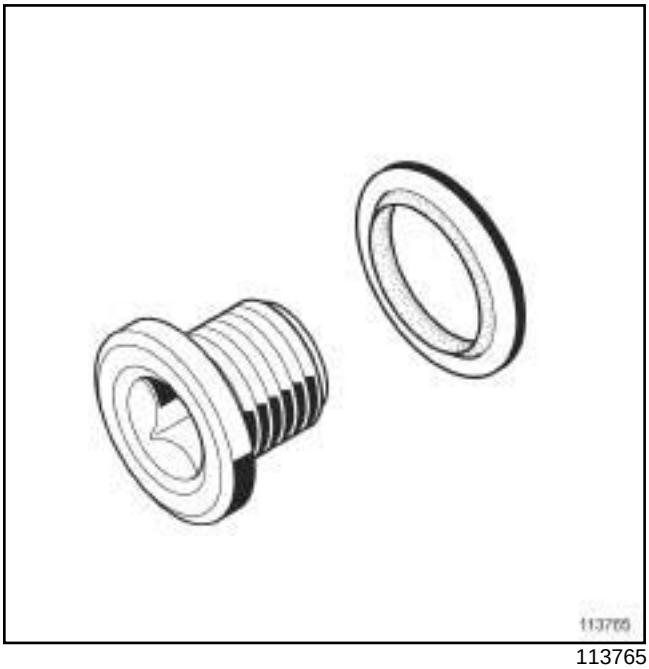

113765

❑ Refit:

- a new seal on the sump drain plug,
- the drain plug on the sump.

❑ Torque tighten the **drain plug (20 N.m)**.

❑ Clean the traces of oil around the drain plug so that any possible leaks can be detected.

❑ Remove the **oil recovery container**.

IV - FILLING

❑ Position the vehicle back on the ground.

❑ Fill the engine with oil, observing the recommended amount.

❑ Wait at least **10 minutes**.

❑ Check the oil level using the dipstick.

❑ Adjust the engine oil level if necessary.

❑ Refit:

- the engine oil filler cap,
- the dipstick,
- the engine cover,
- the engine undertray.

F9Q

Essential special tooling	
Mot. 1018	Sump plug tool.

Essential equipment
oil recovery container

Tightening torques ▽	
drain plug	**20 N.m**

Engine	Suffix	Average oil capacity (check and adjust with dipstick) (l)	
		Oil change without filter replacement	Oil change with filter replacement
F9Q	870	4.7	5.1
	872		

IMPORTANT
Wear leaktight gloves (Nitrile type) for this operation.

WARNING
Always check the oil level using the dipstick.

Do not exceed the maximum level on the dipstick (could destroy the engine).

Correct the engine oil level if necessary before delivering the vehicle to the customer.

Note:

When topping up the engine oil, always leave at least **10 minutes** before checking the level with a dipstick.

I - PARTS AND CONSUMABLES FOR THE REPAIR

❑ **parts always to be replaced: Engine oil sump drain plug seal (10,03,01,04)**

❑ Consumable:

- engine oil (see **Diesel engine oils: Specifications**) (Technical Note 6013A, 04A, Lubricants).

II - OIL SERVICE

❑ Position the vehicle on a two-post lift (see **Vehicle: Towing and lifting**) (02A, Lifting equipment).

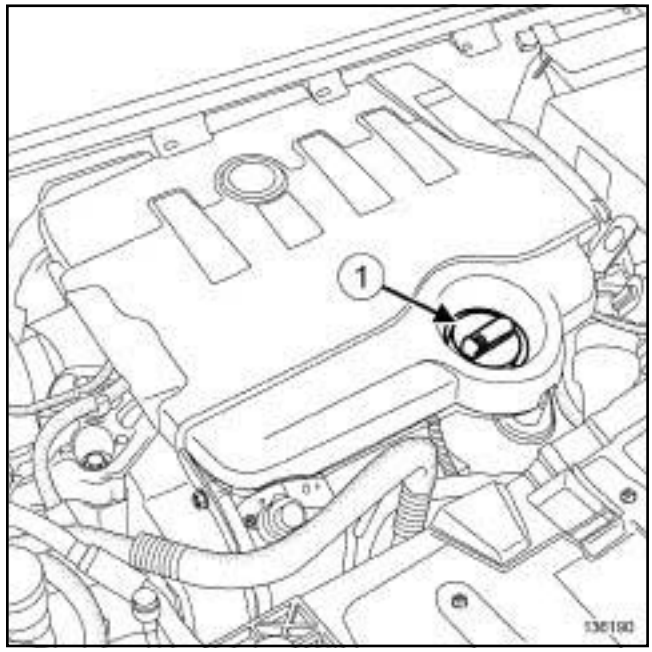

136190

❑ Remove:

- the « oil filler cap - dipstick » assembly (**1**) ,
- the engine undertray bolts,
- the engine undertray.

❑ Place a **oil recovery container** underneath the engine oil drain plug.

F9Q

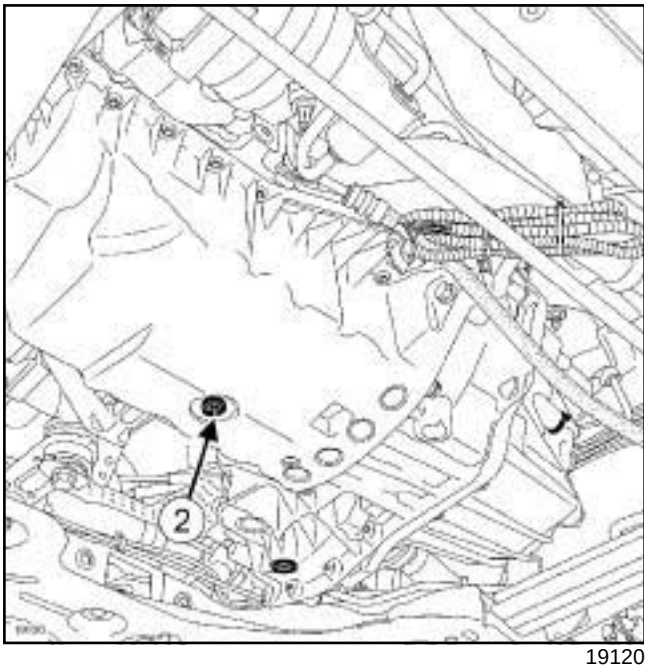

19120

- ❑ Remove the engine oil drain plug (**2**) using the **(Mot. 1018)**.
- ❑ Let the engine oil run into the **oil recovery container**.
- ❑ Remove the drain plug seal.

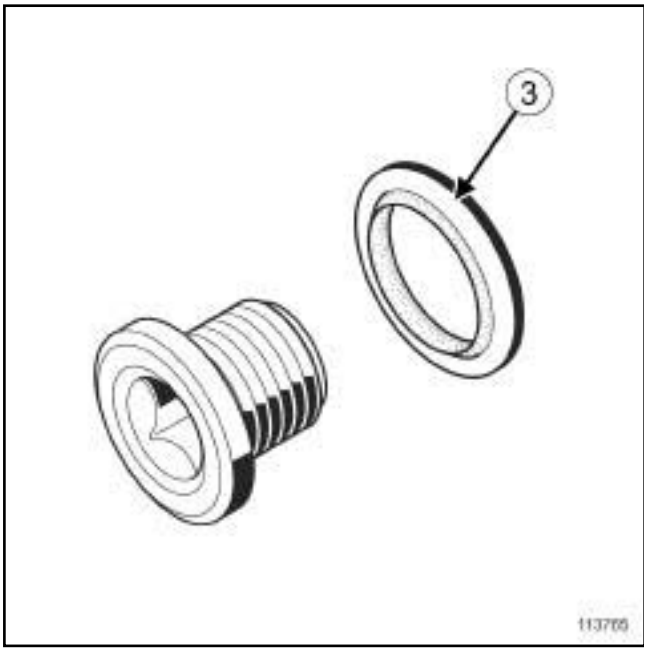

113765

- ❑ Refit:
  - a new seal (**3**) on the sump drain plug,
  - the drain plug on the sump.
- ❑ Torque tighten the **drain plug (20 N.m)**.
- ❑ Clean the traces of oil around the drain plug so that any possible leaks can be detected.
- ❑ Remove the **oil recovery container**.

III - FILLING

- ❑ Fill the engine with oil, observing the recommended amount.
- ❑ Wait at least **10 minutes**.
- ❑ Check the oil level using the dipstick.
- ❑ Adjust the engine oil level if necessary.
- ❑ Refit:
  - the « filler cap - dipstick » assembly,
  - the engine undertray.

K9K

Essential special tooling	
Mot. 1329	Oil filter removing tool (76 mm diameter).

Essential equipment
oil recovery container

IMPORTANT
Wear leaktight gloves (Nitrile type) for this operation.

WARNING
Always check the oil level using the dipstick.

Do not exceed the maximum level on the dipstick (could destroy the engine).

Correct the engine oil level if necessary before delivering the vehicle to the customer.

Note:

When topping up the engine oil, always leave at least **10 minutes** before checking the level with a dipstick.

REMOVAL

I - REMOVAL PREPARATION OPERATION

❑ Position the vehicle on a two-post lift (see **Vehicle: Towing and lifting**) (02A, Lifting equipment).

❑ Remove:

- the engine undertray bolts,
- the engine undertray.

❑ Place a **oil recovery container** underneath the engine.

II - OPERATION FOR REMOVAL OF PART CONCERNED

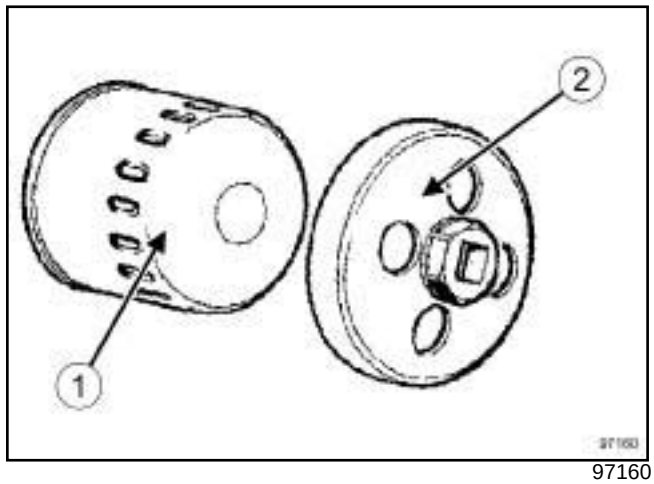

97160

❑ Remove the oil filter (**1**) using the tool **(Mot. 1329)** (**2**)

REFITTING

I - REFITTING PREPARATION OPERATION

❑ **parts always to be replaced: Oil filter (10,05,05, 03)**.

❑ Lubricate the new oil filter seal with new engine oil.

II - REFITTING OPERATION FOR PART CONCERNED

❑ Refit a new oil filter by hand until the oil filter seal comes into contact with the oil filter support.

❑ Tighten the new oil filter 3/4 of a turn by hand or using the **(Mot. 1329)**.

III - FINAL OPERATION

❑ Wipe any oil run-off with a cloth.

❑ Top up the oil level in the engine using oil recommended by the manufacturer (see **Engine oil: Specifications**) (Technical Note 6013A, 04A, Lubricants).

❑ Start the engine and leave it running for approximately **30 seconds**.

❑ Check there are no leaks from the oil filter.

❑ Remove the **oil recovery container**.

❑ Refit:

- the engine undertray,
- the engine undertray bolts.

❑ Wait at least **10 minutes**.

K9K

- Check the oil level using the dipstick.
- Adjust the engine oil level if necessary.

Note:

The engine oil level must be between the “minimum” and “maximum” marks on the dipstick.

K4M

Essential special tooling	
Mot. 1329	Oil filter removing tool (76 mm diameter).

Essential equipment
oil recovery container

IMPORTANT

Wear leaktight gloves (Nitrile type) for this operation.

WARNING

Always check the oil level using the dipstick.

Do not exceed the maximum level on the dipstick (could destroy the engine).

Correct the engine oil level if necessary before delivering the vehicle to the customer.

Note:

When filling up the engine oil, always leave at least 10 minutes for the oil to drain down before checking with a dipstick.

When removing the oil filter, check that the oil filter seal is not still stuck to the cylinder block or the oil filter support.

REMOVAL

I - REMOVAL PREPARATION OPERATION

❑ Position the vehicle on a two-post lift (see **Vehicle: Towing and lifting**) (02A, Lifting equipment).

❑ Remove:

- the engine undertray bolts,
- the engine undertray.

❑ Place the **oil recovery container** under the engine.

II - OPERATION FOR REMOVAL OF PART CONCERNED

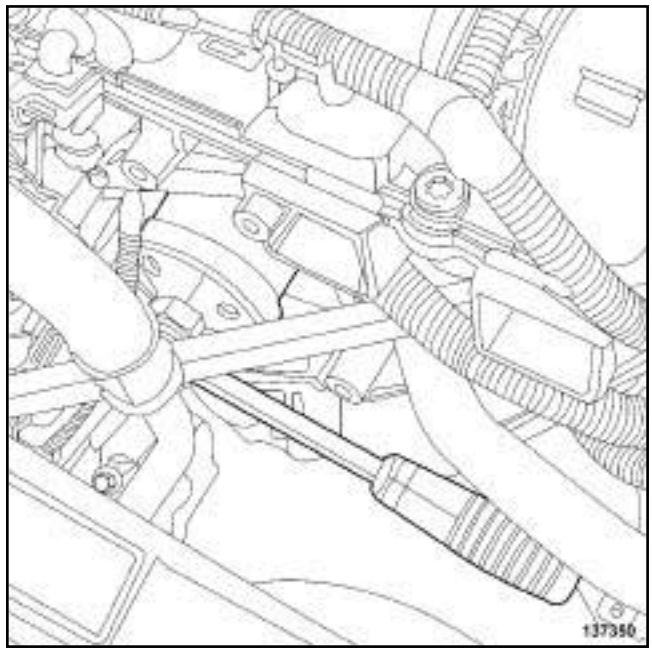

137350

❑ Remove the oil filter using the **(Mot. 1329)**.

REFITTING

I - REFITTING PREPARATION OPERATION

❑ **parts always to be replaced: Oil filter (10,05,05, 03)**.

❑ Use **SURFACE CLEANER** (see **Vehicle: Precautions for repair**) (04B, Consumables - Products) to clean and degrease the cylinder block joint face.

❑ Lubricate the oil filter seal with new engine oil.

II - REFITTING OPERATION FOR PART CONCERNED

❑ Fit a new oil filter.

❑ Tighten the oil filter until it makes contact.

❑ Manually tighten the oil filter by 3/4 of a turn.

III - FINAL OPERATION

❑ Remove the **oil recovery container**.

❑ Wipe any oil run-off with a cloth.

❑ Top up the engine oil with oil recommended by the manufacturer (see **Engine oil: Specifications**) (Technical Note 6013A, 04A, Lubricants).

❑ Start the engine and wait until the oil pressure warning light goes out on the instrument panel.

K4M

- ❏ Check for leaks from the oil filter.
- ❏ Refit the engine undertray.
- ❏ Wait at least **10 minutes**.
- ❏ Check the oil level using the dipstick.
- ❏ Adjust the engine oil level if necessary.

F4R

Essential special tooling	
Mot. 1329	Oil filter removing tool (76 mm diameter).

Essential equipment
oil recovery container

IMPORTANT
Wear leaktight gloves (Nitrile type) for this operation.

WARNING
Always check the oil level using the dipstick.

Do not exceed the maximum level on the dipstick (could destroy the engine).

Correct the engine oil level if necessary before delivering the vehicle to the customer.

Note:

When topping up the engine oil, always leave at least 10 minutes before checking the level with a dipstick.

When removing the oil filter, check that the oil filter seal is not still stuck to the cylinder block or oil filter mounting.

REMOVAL

I - REMOVAL PREPARATION OPERATION

❏ Position the vehicle on a two-post lift (see **Vehicle: Towing and lifting**) (02A, Lifting equipment).

❏ Remove:

- the engine cover,
- the engine undertray bolts,
- the engine undertray.

❏ Place the **oil recovery container** under the engine.

II - OPERATION FOR REMOVAL OF PART CONCERNED

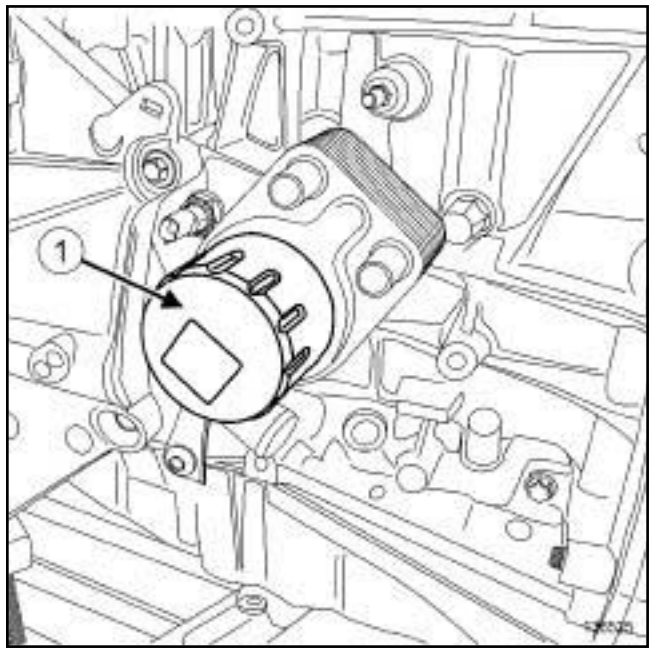

136525

❏ Remove the oil filter (**1**) using the tool **(Mot. 1329)**

REFITTING

I - REFITTING PREPARATION OPERATION

❏ Use **BRAKE CLEANER** (see **Vehicle: Parts and ingredients for the repairwork**) (04B Consumables - Products) to clean and degrease the gasket surface of the oil-water heat exchanger.

WARNING
To ensure proper sealing, the gasket surfaces must be clean, dry and not greasy (avoid any finger marks).

❏ **parts always to be replaced: Oil filter (10,05,05, 03)**.

❏ Lubricate the new oil filter seal with new engine oil.

II - REFITTING OPERATION FOR PARTS CONCERNED

❏ Fit a new oil filter.

❏ Tighten the oil filter until it makes contact.

❏ Tighten the oil filter by 3/4 of a turn.

III - FINAL OPERATION

❏ Wipe any oil run-off with a cloth.

F4R

- ❏ Top up the engine oil with oil recommended by the manufacturer (see **Vehicle: Parts and ingredients for the repairwork**) (04B Consumables - Products).
- ❏ Start the engine and wait until the oil pressure warning light goes out on the instrument panel.
- ❏ Check for leaks from the oil filter.
- ❏ Remove the **oil recovery container**.
- ❏ Refit the engine undertray.
- ❏ Wait at least **10 minutes**.
- ❏ Check the oil level using the dipstick.
- ❏ Adjust the engine oil level if necessary.

F9Q

Essential special tooling	
Mot. 1280-01	Oil filter removing tool, 86 mm diameter.

Essential equipment
oil recovery container

REMOVAL

I - REMOVAL PREPARATION OPERATION

- ❑ Position the vehicle on a two-post lift (see **Vehicle: Towing and lifting**) (02A, Lifting equipment).
- ❑ Remove:
  - the engine undertray bolts,
  - the engine undertray.
- ❑ Fit a **oil recovery container** under the engine.

II - OPERATION FOR REMOVAL OF PART CONCERNED

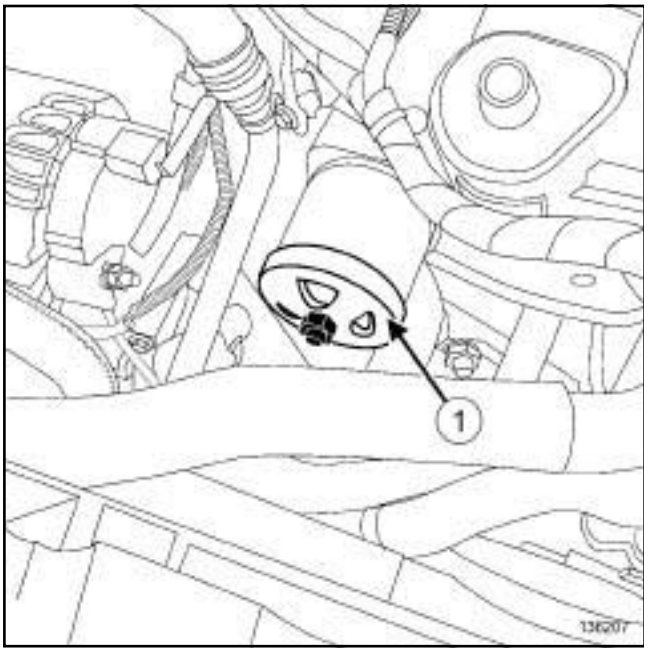

136207

- ❑ Remove the oil filter using the **(Mot. 1280-01)** (**1**) .

REFITTING

I - REFITTING PREPARATION OPERATION

- ❑ Use **SURFACE CLEANER** (see **Vehicle: Parts and ingredients for the repairwork**) (04B, Consumables - Products) to clean and degrease the cylinder block joint face.
- ❑ **parts always to be replaced: Oil filter (10,05,05, 03)**.
- ❑ Lubricate the new oil filter seal with new engine oil.

II - REFITTING OPERATION FOR PART CONCERNED

- ❑ Fit a new oil filter.
- ❑ Tighten the oil filter until it makes contact.
- ❑ Tighten the oil filter by 3/4 of a turn.

III - FINAL OPERATION

- ❑ Remove the **oil recovery container**.
- ❑ Wipe any oil run-off with a cloth.
- ❑ Top up the engine oil with oil recommended by the manufacturer (see **Engine oil: Specifications**) (Technical Note 6013A, 04A, Lubricants).
- ❑ Start the engine and wait until the oil pressure warning light goes out on the instrument panel.
- ❑ Check that there are no leaks from the oil filter.
- ❑ Refit the engine undertray.
- ❑ Wait at least **10 minutes**.
- ❑ Check the oil level using the dipstick.
- ❑ Adjust the engine oil level if necessary.

K9K

Essential equipment
refrigerant charging station

Tightening torques ▽	
oil-water heat exchanger bolt	**39 N.m**
the oil filter support bolt	**28 N.m**

IMPORTANT
To avoid all risk of damage to the systems, apply the safety and cleanliness instructions and operation recommendations before carrying out any repair (see **Air conditioning: Precautions for repair**) .

IMPORTANT
Wear leaktight gloves (Nitrile type) for this operation.

IMPORTANT
Wear heat protective gloves during the operation.

IMPORTANT
The circuits are designed to be pressurised, so be careful at high temperatures (risk of serious burns).

Do not remove the cap from the expansion bottle while the engine is hot.

Take care when carrying out a repair under the bonnet, as the radiator fan(s) may start to operate without warning.

Do not open the bleed screw(s) with the engine running.

WARNING
Prepare for the flow of fluid, and protect the surrounding components.

REMOVAL

I - REMOVAL PREPARATION OPERATION

❑ Position the vehicle on a two-post lift (see **Vehicle: Towing and lifting**) (02A, Lifting equipment).

❑ Remove:

- the engine cover,
- the front wheels (see **Wheel: Removal - Refitting**) (35A, Wheels and tyres),
- the front section of the front wheel arch liners (see **Front wheel arch liner: Removal - Refitting**) (55A, Exterior protection),
- the engine undertray bolts,
- the engine undertray,
- the front bumper (see **Front bumper: Removal - Refitting**) (55A, Exterior protection).

❑ Drain:

- the cooling system (see **19A**, **Cooling**, **Cooling circuit: Draining - Refilling**, page **19A-17**) ,
- the refrigerant fluid circuit using the **refrigerant charging station** (see **Coolant circuit Draining - Refilling**) (62A, Air conditioning).

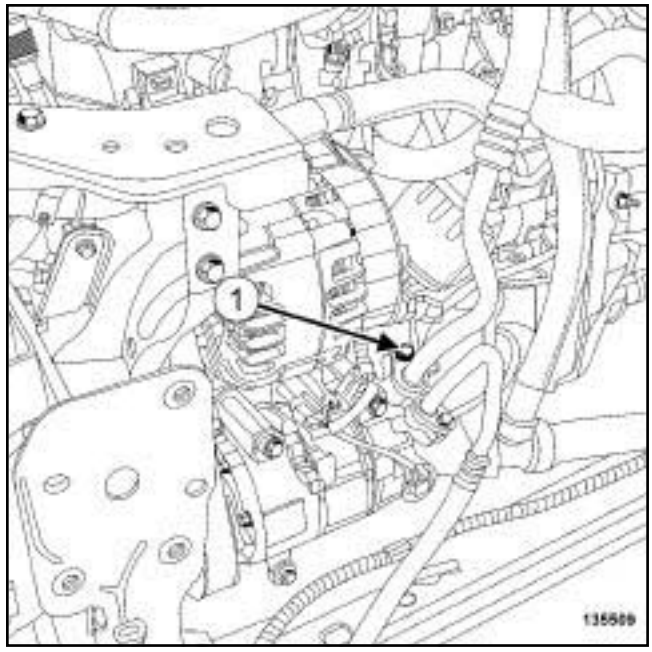

135509

❑ Remove the bolt (**1**) for the "intermediate pipe - compressor" connecting pipe from the air conditioning compressor.

❑ Disconnect the "intermediate pipe - compressor" connecting pipe from the air conditioning compressor.

K9K

- ❑ Remove the "intermediate pipe - compressor" connecting pipe seal.
- ❑ Fit a suitable blanking plug to:
  - the opening of the "intermediate pipe - compressor" connecting pipe,
  - the compressor opening.
- ❑ Separate the "intermediate pipe - compressor" connecting pipe from the air conditioning compressor

II - OPERATION FOR REMOVAL OF PART CONCERNED

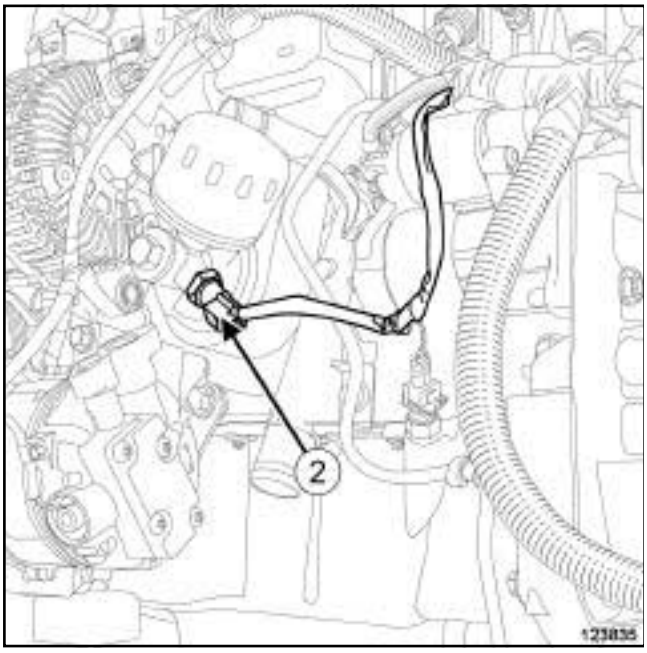

123835

- ❑ Disconnect the oil pressure sensor connector (**2**) .

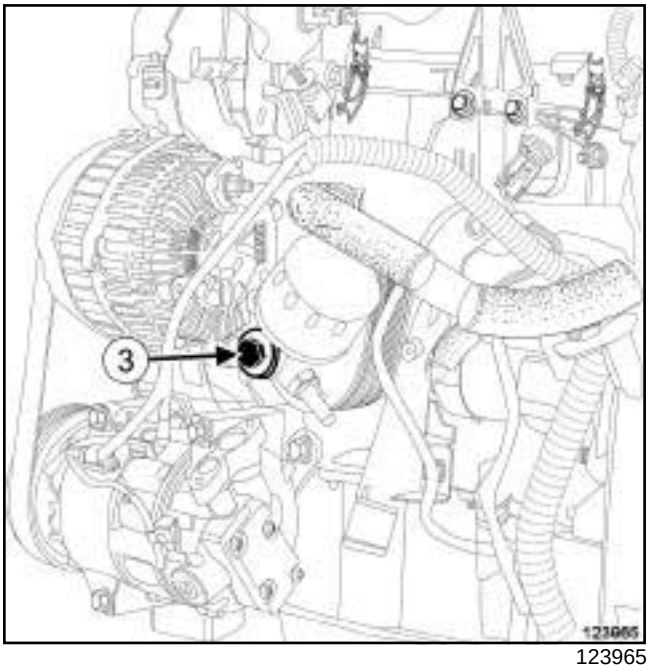

123965

- ❑ Remove:
  - the bolt (**3**) from the oil filter support,
  - the oil filter support.

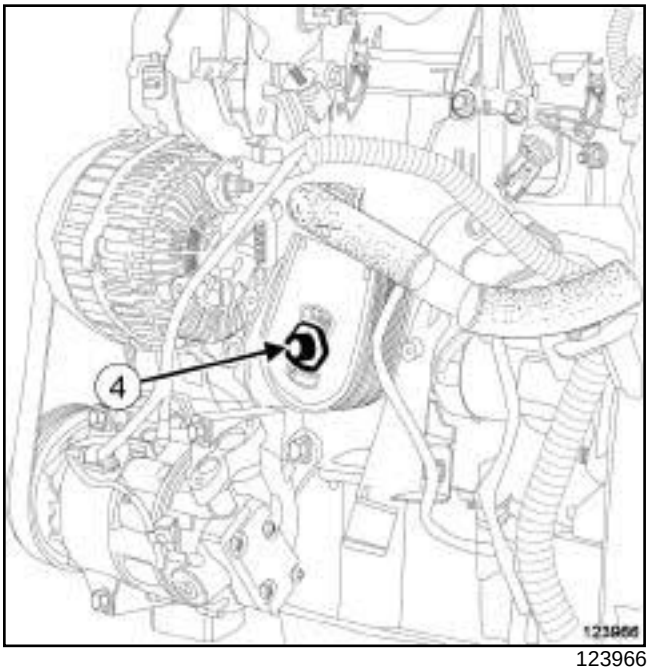

123966

- ❑ Remove:
  - the bolt (**4**) from the oil-water heat exchanger,
  - the oil-water heat exchanger.

K9K

REFITTING

I - REFITTING PREPARATION OPERATION

- ❑ **parts always to be replaced: refrigerant pipe seal (30,02,02,52)**.
- ❑ **parts always to be replaced: coolant-engine oil heat exchanger seal on the cylinder block (10,05, 05,12)**.
- ❑ Clean off any drips of oil and coolant using a **CLEAN CLOTH** :
  - on the cylinder block,
  - on the oil filter support,
  - on the coolant pump inlet pipe.
- ❑ Use **SURFACE CLEANER** (see **Vehicle: Parts and ingredients for the repairwork**) (04B, Consumables - Products) to degrease:
  - the housing of each seal in the oil-water heat exchanger if it is to be reused,
  - the oil-water heat exchanger joint face if it is to be reused,
  - the mating face of each seal on the coolant pump inlet pipe,
  - the joint face on the cylinder block,
  - the housing of each oil filter support seal,
  - the housing of each seal in the oil filter support.

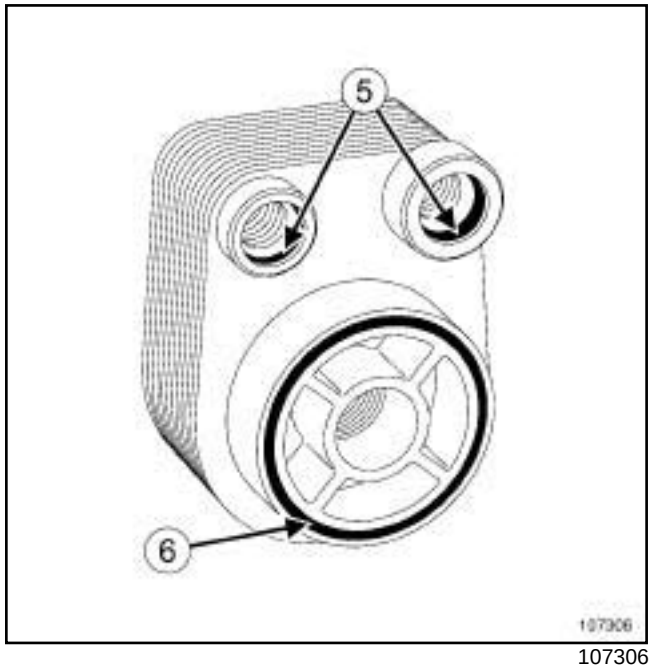

107306

- ❑ Refit new seals (**5**) and (**6**) on the oil-water heat exchanger.
- ❑ Apply soapy water to the two seals (**5**) in contact with the coolant pump inlet pipe.

II - REFITTING OPERATION FOR PART CONCERNED

- ❑ Apply two drops of **HIGH STRENGTH THREAD LOCK** (see **Vehicle: Parts and ingredients for the repairwork**) (04B, Consumables - Products) to the oil-coolant heat exchanger bolt.
- ❑ Refit the oil-water heat exchanger.
- ❑ Torque tighten the **oil-water heat exchanger bolt (39 N.m)**.
- ❑ Refit the oil filter holder.
- ❑ Torque tighten **the oil filter support bolt (28 N.m)**.
- ❑ Connect the oil pressure sensor connector.

III - FINAL OPERATION

- ❑ Fit the "intermediate pipe - compressor" connecting pipe fitted with a new seal onto the air conditioning compressor.
- ❑ Remove the blanking plug from:
  - the opening of the "intermediate pipe - compressor" connecting pipe,
  - the compressor opening.

K9K

- ❑ Clip the "intermediate pipe - compressor" connecting pipe fitted with a new seal onto the air conditioning compressor.
- ❑ Refit:
  - the bolt for the "intermediate pipe - compressor" connecting pipe onto the air conditioning compressor,
  - the front bumper (see **Front bumper: Removal - Refitting**) (55A, Exterior protection).
  - the engine undertray,
  - the front section of the front wheel arch liners (see **Front wheel arch liner: Removal - Refitting**) (55A, Exterior protection),
  - the front wheels (see **Wheel: Removal - Refitting**) (35A, Wheels and tyres),
  - the engine cover,
- ❑ Perform the following operations:
  - fill the cooling system (see **19A**, **Cooling**, **Cooling circuit: Draining - Refilling**, page **19A-17**) ,
  - bleed the cooling circuit (see **19A**, **Cooling**, **Cooling circuit: Draining - Refilling**, page **19A-17**) ,
  - fill the refrigerant circuit using the **refrigerant charging station** (see **Coolant circuit Draining - Refilling**) (62A, Air conditioning).

F4R

Essential special tooling	
Ms. 583	Hose clamp pliers.
Mot. 1448	Long nose pliers for hose clips.

Tightening torques ▽	
oil-water heat exchanger nipple	**60 N.m**

IMPORTANT
Wear latex gloves during the operation.

REMOVAL

I - REMOVAL PREPARATION OPERATION

❑ Position the vehicle on a two-post lift (see **Vehicle: Towing and lifting**) (02A, Lifting equipment).

❑ Remove:

- the engine undertray bolts,
- the engine undertray.

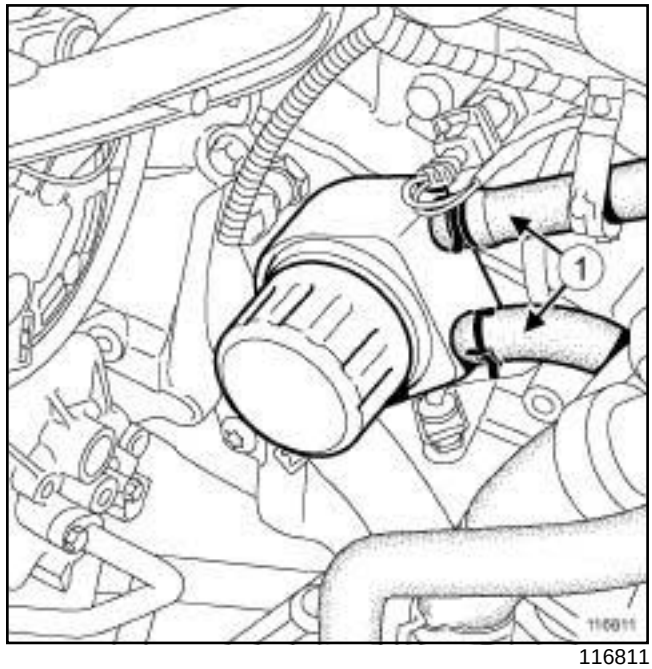

116811

❑ Remove the oil filter (see **10A**, **Engine and cylinder block assembly**, **Oil filter: Removal - Refitting**, page **10A-48**) .

❑ Fit the tools **(Ms. 583)** onto the oil-water heat exchanger cooling hoses (**1**) .

❑ Separate the clips from the oil-water heat exchanger cooling hoses using the tool **(Mot. 1448)**.

WARNING
Prepare for the flow of fluid, and protect the surrounding components.

❑ Disconnect the oil-water heat exchanger cooling hoses.

F4R

II - OPERATION FOR REMOVAL OF PART CONCERNED

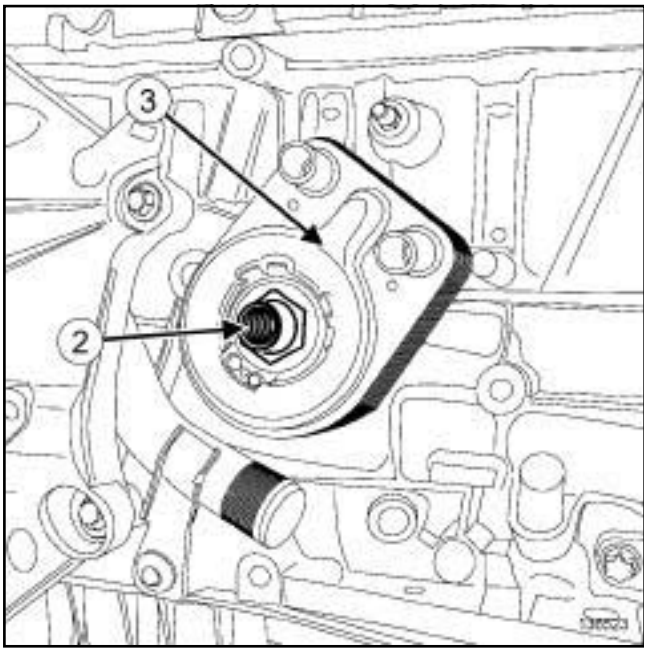

136523

❑ It is essential to mark the position of the coolant-oil heat exchanger.

❑ Remove:

- the nipple (**2**) from the oil-water heat exchanger,
- the oil-water heat exchanger (**3**) ,
- the oil-water heat exchanger seal.

> **WARNING**
> Prepare for the flow of fluid, and protect the surrounding components.

REFITTING

I - REFITTING PREPARATION OPERATION

❑ Use **SURFACE CLEANER** (see **Vehicle: Parts and ingredients for the repairwork**) (04B, Consumables - Products) to clean and degrease:

- the oil-water heat exchanger joint face if it is to be reused,
- the cylinder block gasket face.

> **WARNING**
> To ensure proper sealing, the gasket surfaces must be clean, dry and not greasy (avoid any finger marks).

❑ **parts always to be replaced: coolant-engine oil heat exchanger seal on the cylinder block (10,05, 05,12)**.

II - REFITTING OPERATION FOR PART CONCERNED

❑ Refit:

- a new seal to the oil-water heat exchanger,
- the coolant-oil heat exchanger,
- the oil-coolant heat exchanger fitting.

❑ Torque tighten the **oil-water heat exchanger nipple (60 N.m)**.

III - FINAL OPERATION

❑ Connect the cooling hoses to the oil-water heat exchanger.

❑ Fit the cooling hose clips onto the oil-water heat exchanger using the tool **(Mot. 1448)**.

❑ Remove the tools **(Ms. 583)** from the oil-water heat exchanger cooling hoses.

❑ Refit the oil filter (see **10A**, **Engine and cylinder block assembly**, **Oil filter: Removal - Refitting**, page **10A-48**) .

❑ Perform the following operations:

- top up of the coolant level,
- bleed the cooling system (see **19A**, **Cooling**, **Cooling circuit: Draining - Refilling**, page **19A-17**) .

❑ Refit the engine undertray.

F9Q

Essential special tooling	
Ms. 583	Hose clamp pliers.
Mot. 1448	Long nose pliers for hose clips.

Tightening torques ▽	
oil-water heat exchanger nipple	**44 N.m**

REMOVAL

I - REMOVAL PREPARATION OPERATION

❑ Position the vehicle on a two-post lift (see **Vehicle: Towing and lifting**) (02A, Lifting equipment).

❑ Remove:

- the engine cover,
- the engine undertray bolts,
- the engine undertray,
- the front wheels (see **Wheel: Removal - Refitting**) (35A, Wheels and tyres),
- the front section of the front wheel arch liners (see **Front wheel arch liner: Removal - Refitting**) (55A, Exterior protection),
- the front bumper (see **Front bumper: Removal - Refitting**) (55A, Exterior protection),
- the frontal impact cross member (see **Front impact cross member: Removal - Refitting**) (41A, Front lower structure),
- the headlights (see **Front headlight: Removal - Refitting**) (80B, Headlights),
- the front bumper supports(42A, Front upper structure).

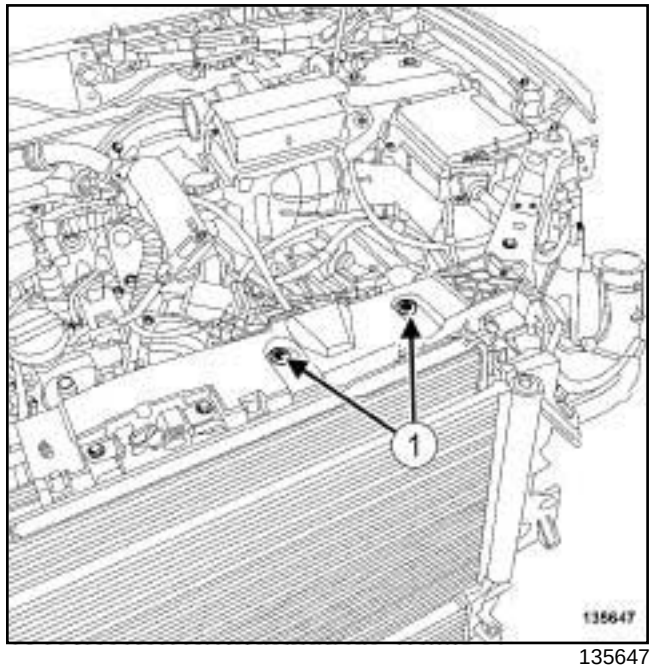

135647

❑ Remove:

- the bolts of the engine wiring channel (**1**) ,
- the bonnet catch (see **Bonnet latch: Removal - Refitting**)

F9Q

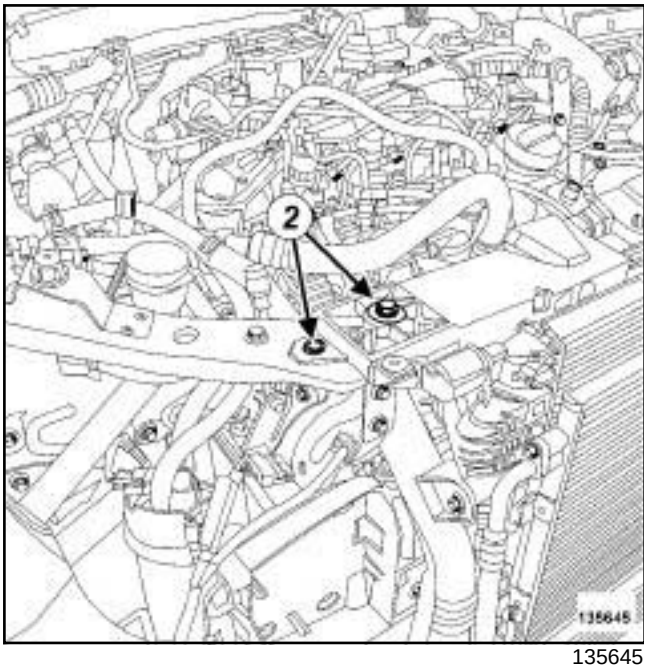

135645

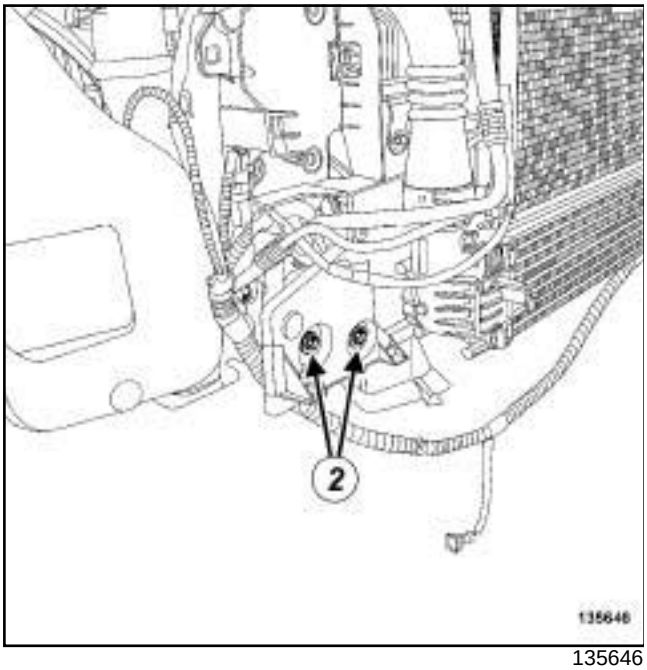

135646

- ❑ Remove the front end panel bolts (**2**) .
- ❑ Tilt the front panel.
- ❑ Remove the intercooler outlet air outlet pipe (see **12B**, **Turbocharging**, **Intercooler air outlet pipe: Removal - Refitting**, page **12B-56**) .
- ❑ Remove the oil filter (see **10A**, **Engine and cylinder block assembly**, **Oil filter: Removal - Refitting**, page **10A-48**) .

II - OPERATION FOR REMOVAL OF PART CONCERNED

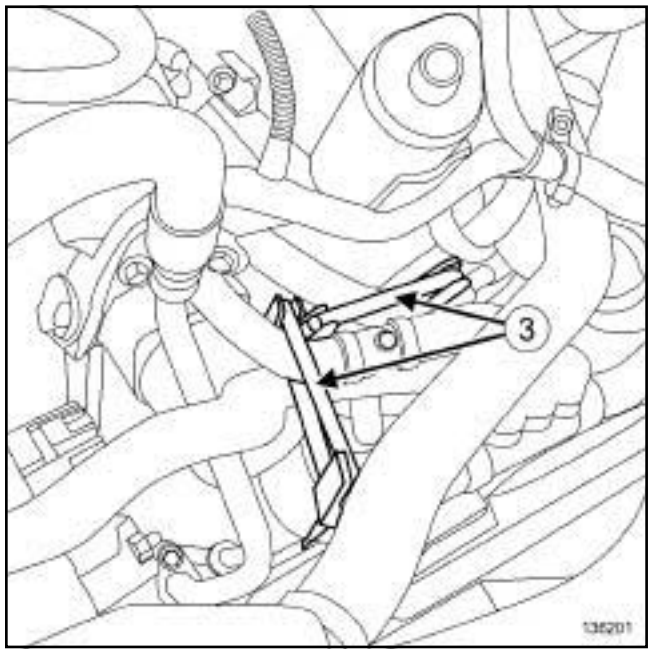

136201

- ❑ Fit the tools (**3**) **(Ms. 583)** onto the intercooler hoses.

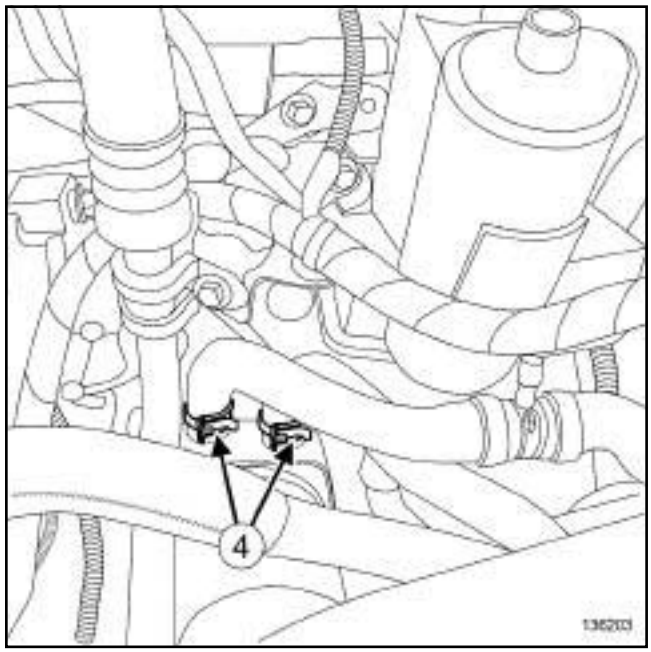

136203

- ❑ Separate the clips (**4**) from the intercooler hoses using the tool **(Mot. 1448)**.
- ❑ Disconnect the intercooler hoses.

F9Q

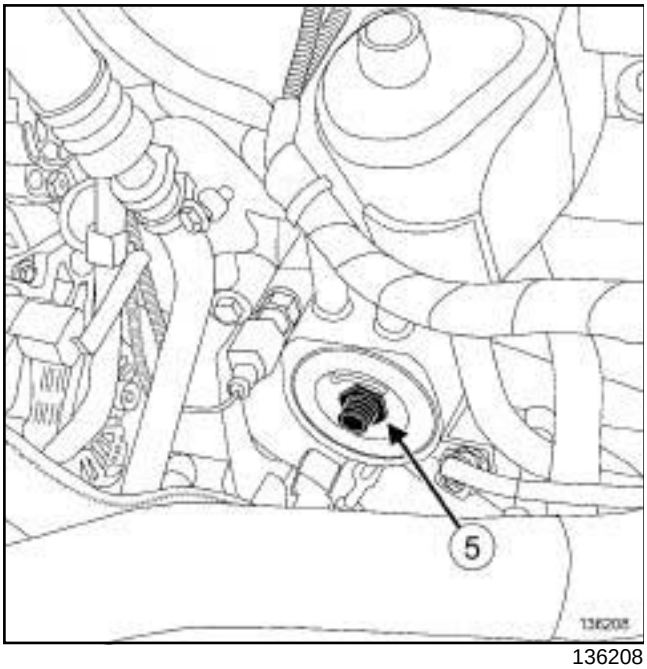

136208

❑ Remove:

- the nipple (**5**) from the oil-water heat exchanger,
- the oil-water heat exchanger,
- the oil-water heat exchanger seal.

REFITTING

I - REFITTING PREPARATION OPERATION

❑ Use **SURFACE CLEANER** (see **Vehicle: Parts and ingredients for the repairwork**) (04B, Consumables - Products) to clean and degrease:

- the oil-water heat exchanger seal mating faces if it is to be reused,
- the cylinder block gasket face.

❑ **parts always to be replaced: coolant-engine oil heat exchanger seal on the cylinder block (10,05, 05,12)**.

parts always to be replaced: Intercooler air outlet pipe (10,09,04,03).

II - REFITTING OPERATION FOR PART CONCERNED

❑ Refit:

- a new seal to the oil-water heat exchanger,
- the oil-water heat exchanger.

❑ Torque tighten the **oil-water heat exchanger nipple (44 N.m)**.

❑ Connect the oil-water heat exchanger hoses.

❑ Fit the hose clips on the oil-water heat exchanger using the tool **(Mot. 1448)**.

❑ Remove the tools **(Ms. 583)** from the oil-water heat exchanger hoses.

❑ Refit the oil filter (see **10A**, **Engine and cylinder block assembly**, **Oil filter: Removal - Refitting**, page **10A-48**) .

III - FINAL OPERATION

❑ Refit a new intercooler air outlet pipe (see **12B**, **Turbocharging**, **Intercooler air outlet pipe: Removal - Refitting**, page **12B-56**) .

❑ Fit the front end panel.

❑ Refit:

- the bonnet catch (see **Bonnet latch: Removal - Refitting**) (52A, Non-side opening element mechanisms),
- the bolts for the engine wiring harness channel,
- the front bumper supports (see **Front bumper support: Removal - Refitting**) (42A, Front upper structure),
- the headlights (see **Front headlight: Removal - Refitting**) (80B, Headlights),
- the frontal impact cross member (see **Front impact cross member: Removal - Refitting**) (41A, Front lower structure),
- the front bumper (see **Front bumper: Removal - Refitting**) (55A, Exterior protection),
- the front section of the front wheel arch liners (see **Front wheel arch liner: Removal - Refitting**) (55A, Exterior protection),
- the front wheels (see **Wheel: Removal - Refitting**) (35A, Wheels and tyres),
- the engine undertray,
- the engine cover.

❑ Bleed the cooling system (see **19A**, **Cooling**, **Cooling circuit: Draining - Refilling**, page **19A-17**) .

K9K

Essential special tooling	
Mot. 1495	22 mm oxygen sensor removal/refitting socket - 1/2" square drive and a 24 mm Allen key.

REMOVAL

I - REMOVAL PREPARATION OPERATION

❏ Position the vehicle on a two-post lift (see **Vehicle: Towing and lifting**) (02A, Lifting equipment).

❏ Remove:

- the engine undertray bolts,
- the engine undertray.

II - OPERATION FOR REMOVAL OF PART CONCERNED

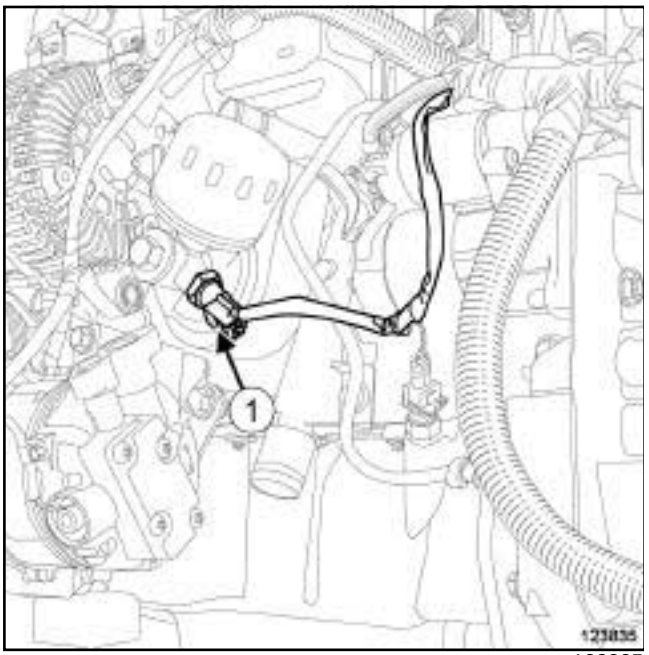

123835

❏ Disconnect the oil pressure sensor connector (**1**) .

❏ Remove the oil pressure sensor using the **(Mot. 1495)**.

REFITTING

I - REFITTING PREPARATION OPERATION

❏ Wipe any oil run-off with a cloth.

II - REFITTING OPERATION FOR PART CONCERNED

❏ Refit the oil pressure sensor using the **(Mot. 1495)**.

❏ Connect the oil pressure sensor connector.

III - FINAL OPERATION

❏ Refit the engine undertray.

K4M

Tightening torques ▽	
oil pressure sensor	**33 N.m**
alternator strut bolt on the alternator	**25 N.m**
alternator strut bolt on the cylinder block	**25 Nm**

REMOVAL

I - REFITTING PREPARATION OPERATION

❑ Position the vehicle on a two-post lift (see **Vehicle: Towing and lifting**) (02A, Lifting equipment).

❑ Remove the front engine cover.

K4M, and 858 or 866

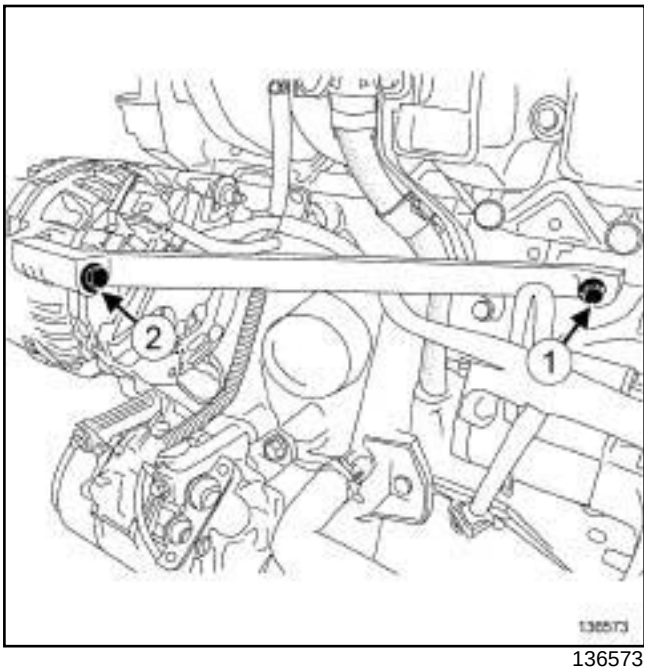

136573

❑ Remove:

- the bolt (**1**) for the alternator strut from the cylinder block,
- the bolt (**2**) for the alternator strut from the alternator,
- the alternator strut.

II - OPERATION FOR REMOVAL OF PART CONCERNED

K4M, and 848

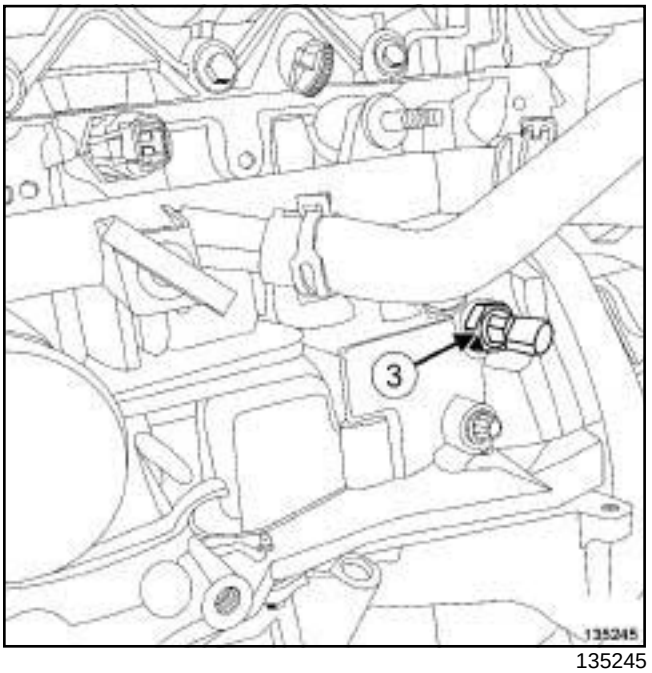

135245

❑ Disconnect the oil pressure sensor connector.

❑ Remove the oil pressure sensor (**3**) .

K4M

K4M, and 858 or 866

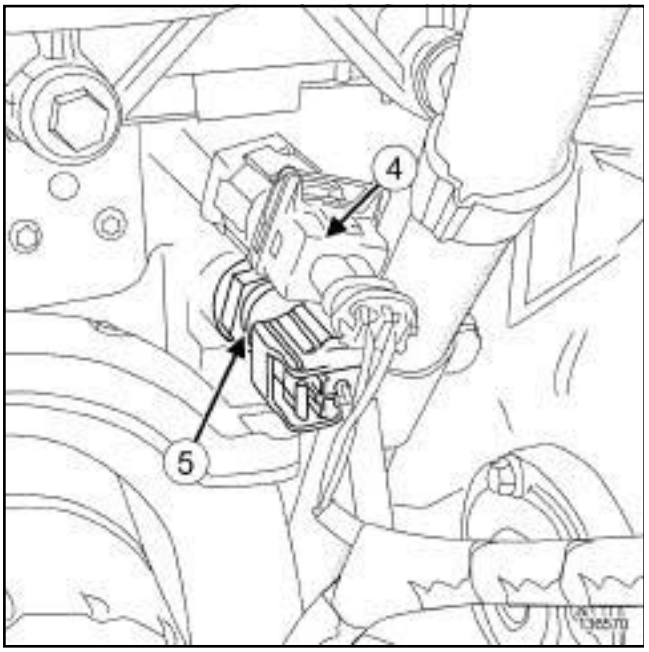

136570

❑ Disconnect:

- the pinking sensor connector (**4**) ,
- the oil pressure sensor (**5**) .

❑ Remove the oil pressure sensor.

REFITTING

I - REFITTING PREPARATION OPERATION

❑ Degrease the mating face of the oil pressure sensor on the cylinder block using **SURFACE CLEANER** (see **Vehicle: Parts and ingredients for the repairwork**) (04B, Consumables - Products).

❑ Coat the threading of the oil pressure sensor with **SILICONE ADHESIVE SEALANT** (see **Vehicle: Parts and ingredients for the repairwork**) (04B, Consumables - Products).

II - REFITTING OPERATION FOR PART CONCERNED

❑ Refit the oil pressure sensor.

❑ Torque tighten the **oil pressure sensor (33 N.m)**.

❑ Connect the oil pressure sensor connector.

K4M, and 858 or 866

❑ Connect the pinking sensor connector.

III - FINAL OPERATION

K4M, and 858 or 866

❑ Refit:

- the alternator strut,
- the bolt for the alternator strut onto the cylinder block,
- the bolt for the alternator strut onto the alternator.

❑ Tighten to torque:

- the **alternator strut bolt on the alternator (25 N.m)**,
- the **alternator strut bolt on the cylinder block (25 Nm)**.

❑ Refit the engine cover.

F4R

Essential special tooling	
Mot. 1495-01	22 mm socket for removing/ refitting oxygen sensors.

Tightening torques ▽	
oil pressure sensor	**39 N.m**

REMOVAL

I - REMOVAL PREPARATION OPERATION

❑ Position the vehicle on a two-post lift (see **Vehicle: Towing and lifting**) (02A, Lifting equipment).

❑ Remove:

- the engine cover,
- the engine undertray bolts,
- the engine undertray,
- the oil filter (see **10A**, **Engine and cylinder block assembly**, **Oil filter: Removal - Refitting**, page **10A-48**) .

II - OPERATION FOR REMOVAL OF PART CONCERNED

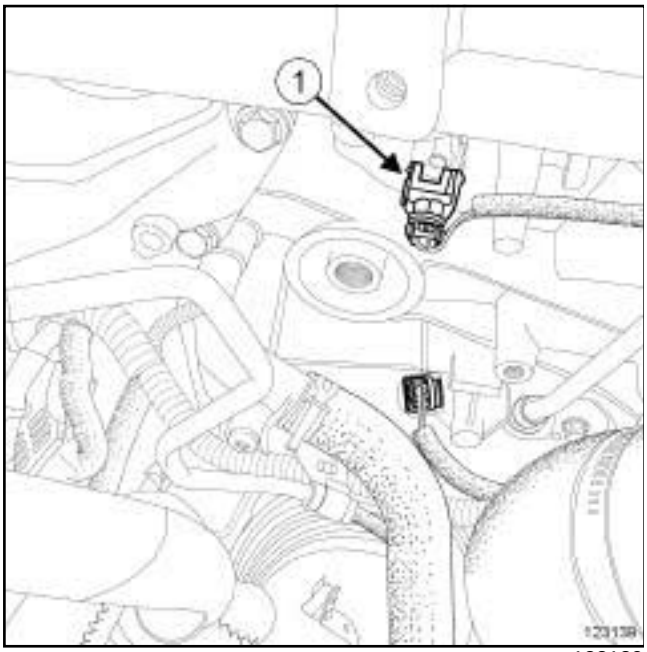

123139

❑ Disconnect the oil pressure sensor connector (**1**) .

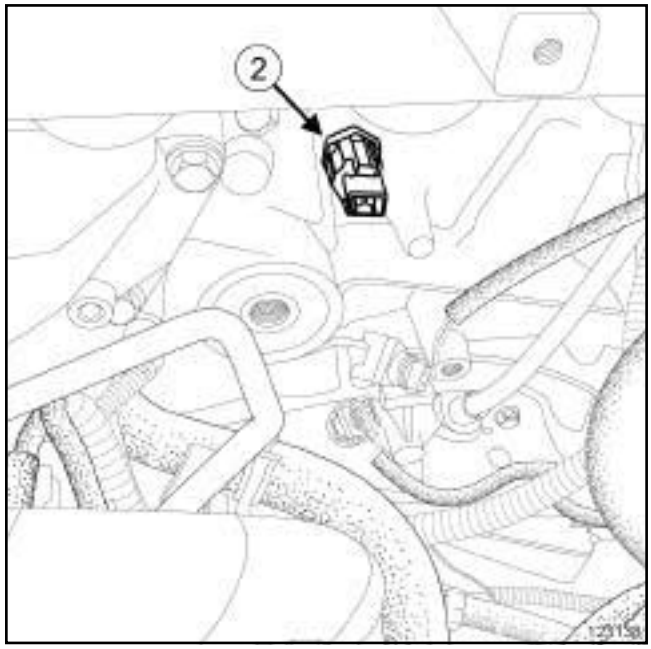

123138

❑ Remove the oil pressure sensor (**2**) using the **(Mot. 1495-01)**.

REFITTING

I - REFITTING PREPARATION OPERATION

❑ Coat the threading of the oil pressure sensor with **SILICONE ADHESIVE SEALANT** (see **Vehicle: Parts and ingredients for the repairwork**) (04B, Consumables - Products).

II - REFITTING OPERATION FOR PART CONCERNED

❑ Refit the oil pressure sensor using the **(Mot. 1495-01)**.

❑ Torque tighten the **oil pressure sensor (39 N.m)** using the tool **(Mot. 1495-01)**.

❑ Connect the oil pressure sensor connector.

III - FINAL OPERATION

❑ Refit:

- the oil filter (see **10A**, **Engine and cylinder block assembly**, **Oil filter: Removal - Refitting**, page **10A-48**) ,
- the engine undertray,
- the engine cover.

F9Q

Tightening torques ▽	
oil pressure sensor	**35 Nm**

REMOVAL

I - REMOVAL PREPARATION OPERATION

❏ Remove:

- the engine undertray bolts,
- the engine undertray.

II - OPERATION FOR REMOVAL OF PART CONCERNED

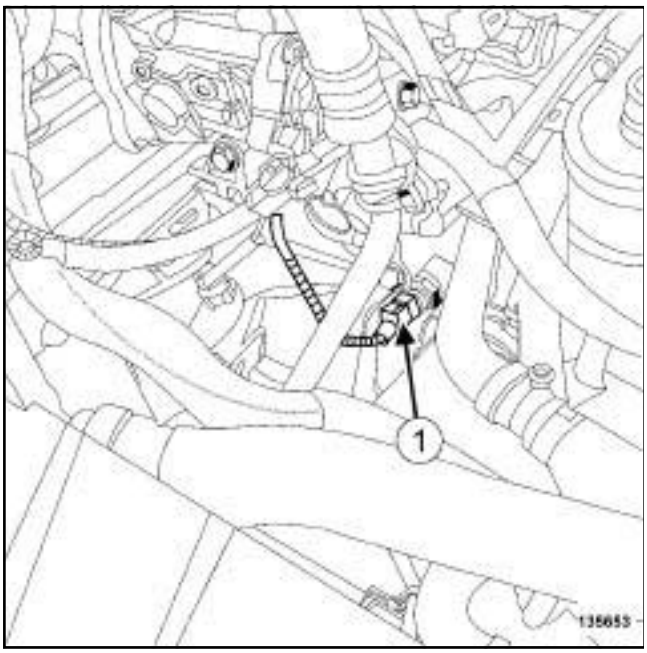

135653

❏ Disconnect the oil pressure sensor connector (**1**) .

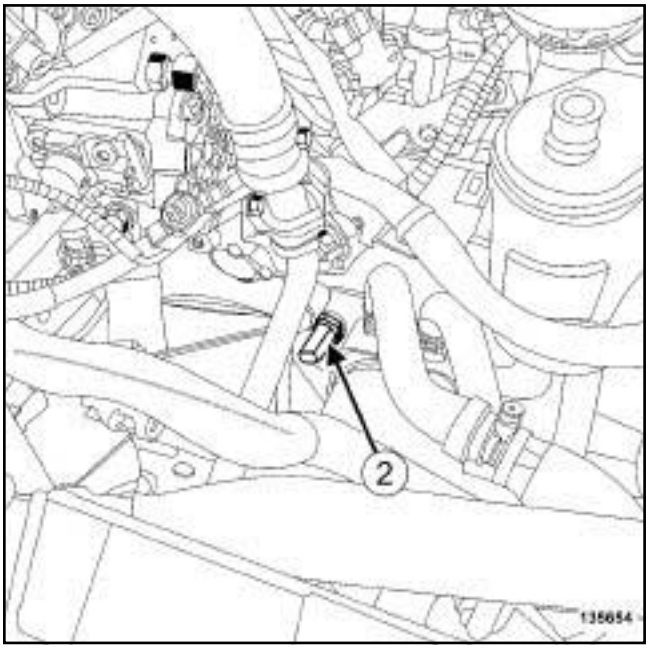

135654

❏ Remove the oil pressure sensor (**2**) .

REFITTING

I - REFITTING OPERATION FOR PART CONCERNED

❏ Refit the oil pressure sensor.

❏ Torque tighten the **oil pressure sensor (35 Nm)**.

❏ Connect the oil pressure sensor connector.

II - FINAL OPERATION

❏ Refit the engine undertray.

K9K

REMOVAL

I - REMOVAL PREPARATION OPERATION

❏ Position the vehicle on a two-post lift (see **Vehicle: Towing and lifting**) (02A, Lifting equipment).

❏ Remove:

- the engine undertray bolts,
- the engine undertray.

II - OPERATION FOR REMOVAL OF PART CONCERNED

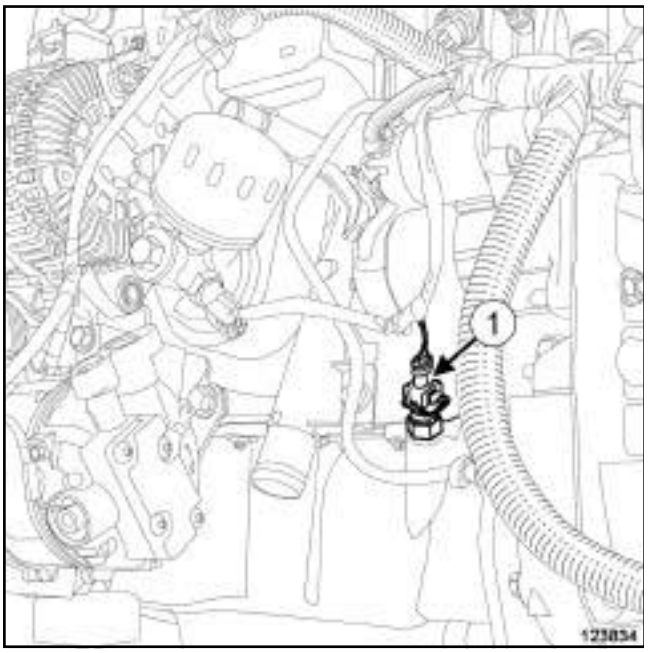

123834

❏ Disconnect the connector (**1**) from the oil level sensor.

❏ Remove the oil level sensor .

REFITTING

I - REFITTING PREPARATION OPERATION

❏ Wipe any oil run-off with a cloth.

II - REFITTING OPERATION FOR PART CONCERNED

❏ Refit the oil level sensor.

❏ Connect the connector to the oil level sensor.

III - FINAL OPERATION

❏ Refit the engine undertray.

K4M

Tightening torques ▽	
oil level sensor	**28 N.m**

REMOVAL

I - REMOVAL PREPARATION OPERATION

❑ Position the vehicle on a two-post lift (see **Vehicle: Towing and lifting**) (02A, Lifting equipment).

❑ Remove:

- the engine undertray bolts,
- the engine undertray.

II - OPERATION FOR REMOVAL OF PART CONCERNED

K4M, and 848

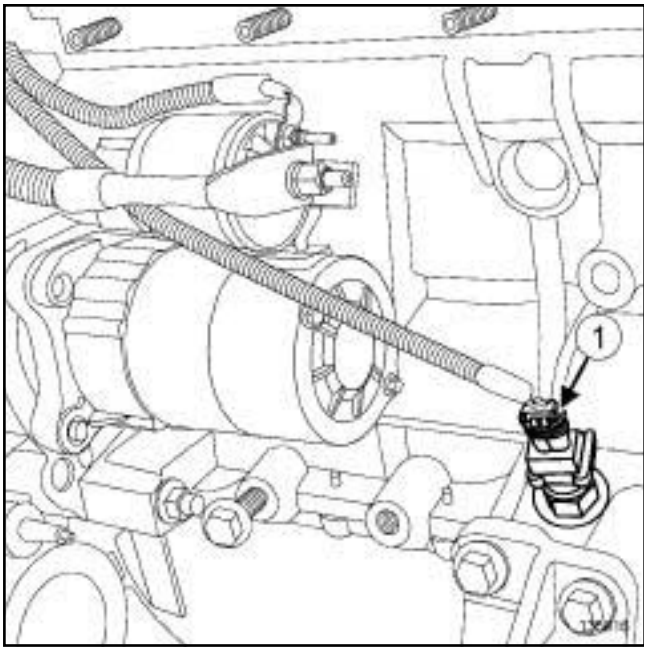

135916

❑ Unclip the wiring from the oil level sensor.

❑ Disconnect the connector (**1**) from the oil level sensor.

❑ Remove the oil level sensor .

K4M, and 858 or 866

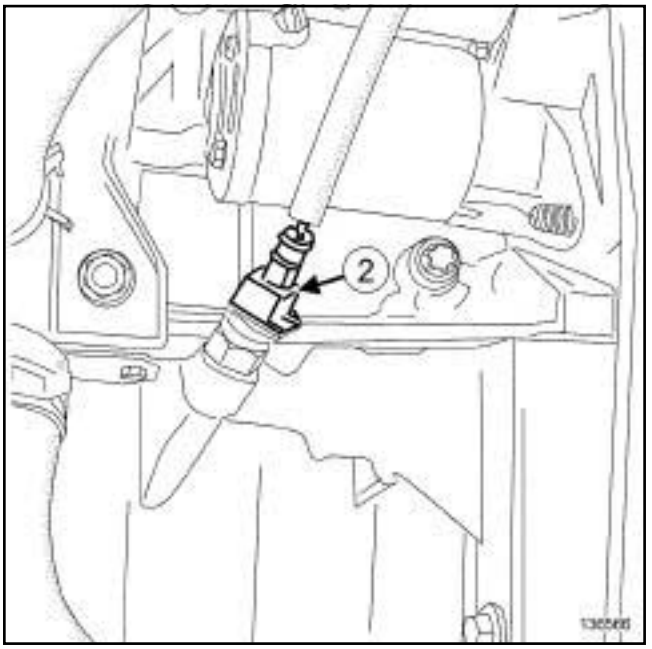

136566

❑ Disconnect the connector (**2**) from the oil level sensor.

❑ Remove the oil level sensor .

REFITTING

I - REFITTING PREPARATION OPERATION

❑ Degrease the mating face of the oil level sensor using **SURFACE CLEANER** (see **Vehicle: Parts and ingredients for the repairwork**) (04B, Consumables - Products) on the cylinder block.

II - REFITTING OPERATION FOR PART CONCERNED

❑ Refit the oil level sensor.

❑ Torque tighten the **oil level sensor (28 N.m)**.

❑ Connect the connector to the oil level sensor.

K4M, and 848

❑ Clip the wiring onto the oil level sensor.

K4M

III - FINAL OPERATION

❑ Refit the engine undertray.

F4R

Tightening torques ▽	
oil level sensor	**25 Nm**

REMOVAL

I - REMOVAL PREPARATION OPERATION

❑ Position the vehicle on a two-post lift (see **Vehicle: Towing and lifting**) (02A, Lifting equipment).

❑ Remove:

- the engine undertray bolts,
- the engine undertray.

II - OPERATION FOR REMOVAL OF PART CONCERNED

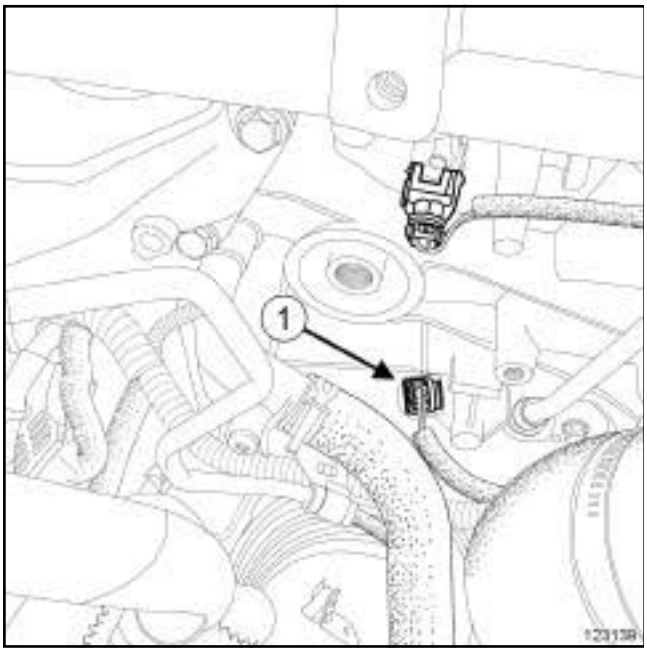

123139

❑ Disconnect the connector (**1**) from the oil level sensor from underneath.

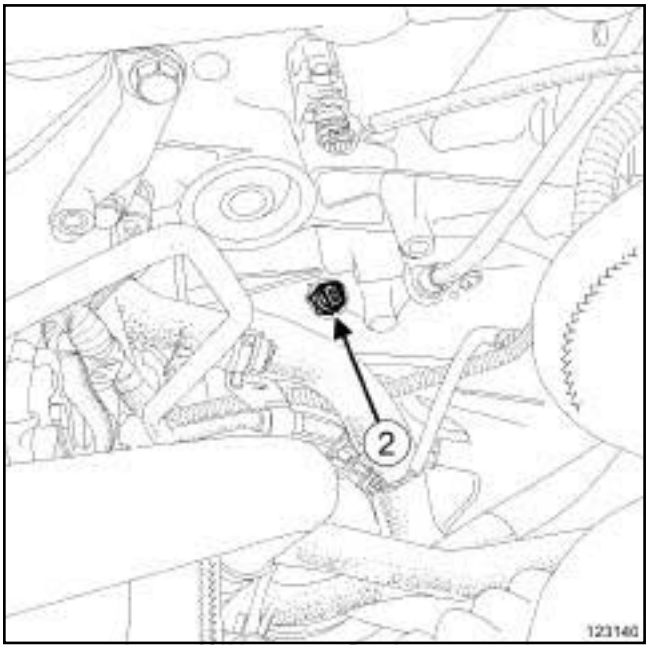

123140

❑ Remove the oil level sensor (**2**) from underneath.

REFITTING

I - REFITTING OPERATION FOR PART CONCERNED

❑ Refit the oil level sensor.

❑ Tighten to torque the **oil level sensor (25 Nm)**.

❑ Connect the connector to the oil level sensor.

II - FINAL OPERATION

❑ Refit the engine undertray.

F9Q

Tightening torques ▽	
oil level sensor	**25 N.m**

REMOVAL

I - REMOVAL PREPARATION OPERATION

❑ Position the vehicle on a two-post lift (see **Vehicle: Towing and lifting**) (02A, Lifting equipment).

❑ Remove:

- the engine cover,
- the engine undertray bolts,
- the engine undertray,
- the front wheels (see **Wheel: Removal - Refitting**) (35A, Wheels and tyres),
- the front section of the front wheel arch liners (see **Front wheel arch liner: Removal - Refitting**) (55A, Exterior protection),
- the front bumper (see **Front bumper: Removal - Refitting**) (55A, Exterior protection),
- the headlights (see **Front headlight: Removal - Refitting**) (80B, Headlights),
- the frontal impact cross member (see **Front impact cross member: Removal - Refitting**) (41A, Front lower structure),
- the front bumper supports (see **Front bumper support: Removal - Refitting**) (42A, Front upper structure).

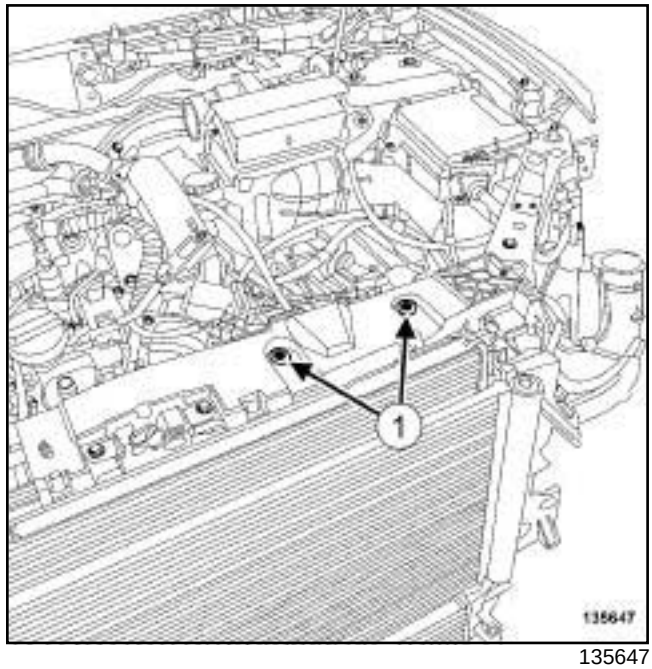

135647

❑ Remove:

- the bolts (**1**) of the engine wiring channel,
- the bonnet catch (see **Bonnet latch: Removal - Refitting**) (52A, Non-side opening element mechanisms).

F9Q

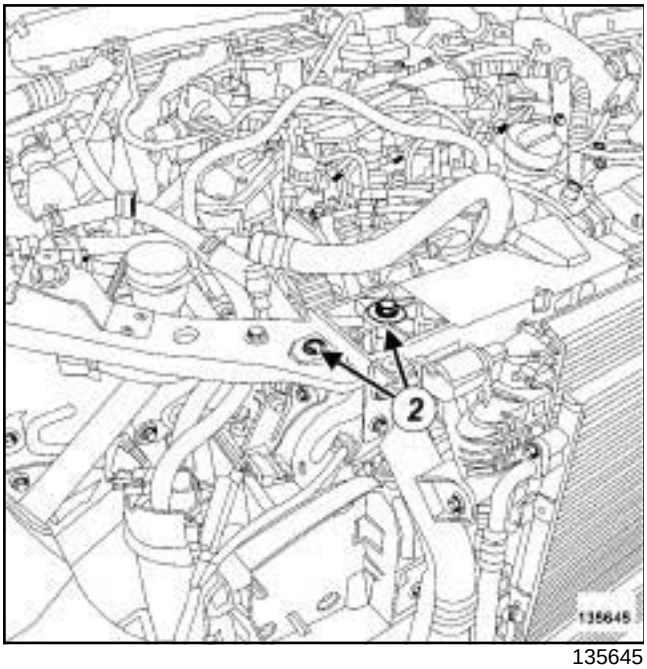

135645

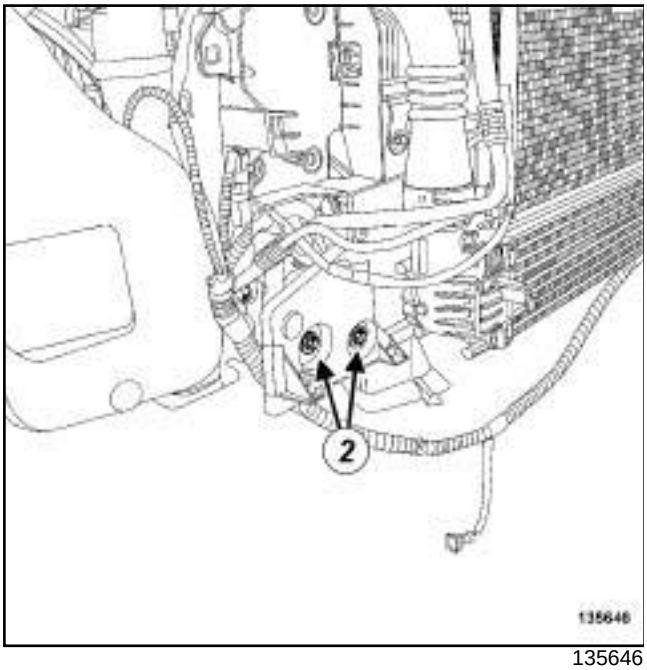

135646

❑ Remove the front end panel bolts (**2**) .

❑ Tilt the front end panel.

❑ Remove the intercooler air outlet pipe (see **12B**, **Turbocharging**, **Intercooler air outlet pipe: Removal - Refitting**, page **12B-56**) .

II - OPERATION FOR REMOVAL OF PART CONCERNED

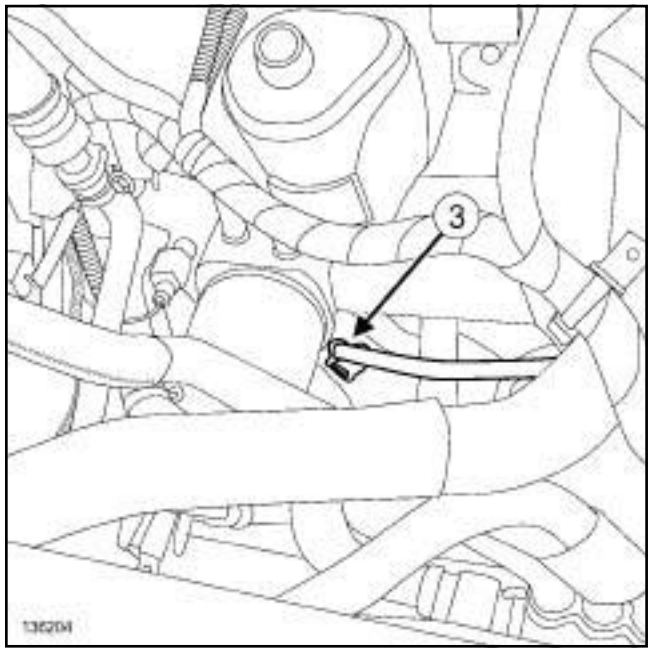

136204

❑ Disconnect the connector (**3**) from the oil level sensor.

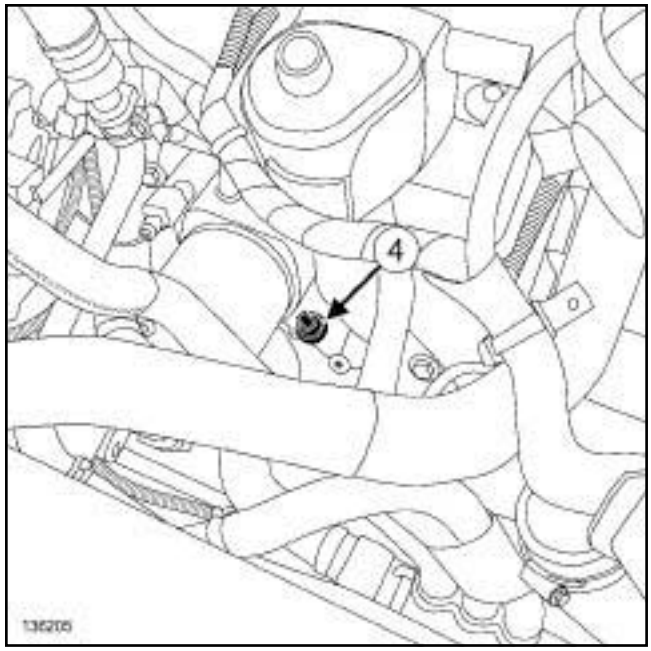

136205

❑ Remove the oil level sensor (**4**) .

REFITTING

I - REFITTING OPERATION FOR PART CONCERNED

❑ Refit the oil level sensor.

F9Q

❏ Tighten to torque the **oil level sensor (25 N.m)**.

II - FINAL OPERATION

❏ Refit:

- a new intercooler air outlet pipe (see **12B**, **Turbocharging**, **Intercooler air outlet pipe: Removal - Refitting**, page **12B-56**) ,
- the front panel,
- the bonnet catch (see **Bonnet latch: Removal - Refitting**) (52A, Non-side opening element mechanisms),
- the bolts for the engine wiring harness channel,
- the front bumper supports (see **Front bumper support: Removal - Refitting**) (42A, Front upper structure),
- the frontal impact cross member (see **Front impact cross member: Removal - Refitting**) (41A, Front lower structure),
- the headlights (see **Front headlight: Removal - Refitting**) (80B, Headlights),
- the front bumper (see **Front bumper: Removal - Refitting**) (55A, Exterior protection),
- the front section of the front wheel arch liners (see **Front wheel arch liner: Removal - Refitting**) (55A, Exterior protection),
- the front wheels (see **Wheel: Removal - Refitting**) (35A, Wheels and tyres),
- the engine undertray,
- the engine cover.

K4M

Tightening torques ▽	
oil pump bolts	**25 N.m**

IMPORTANT
Wear leaktight gloves (Nitrile type) for this operation.

REMOVAL

I - REMOVAL PREPARATION OPERATION

❏ Position the vehicle on a two-post lift (see **Vehicle: Towing and lifting**) (02A, Lifting equipment).

❏ Remove:

- the engine undertray bolts,
- the engine undertray,

❏ Drain the engine oil (see **10A**, **Engine and cylinder block assembly**, **Engine oil: Draining - Refilling**, page **10A-40**) .

❏ Remove:

- the oil level sensor (see **10A**, **Engine and cylinder block assembly**, **Oil level sensor: Removal - Refitting**, page **10A-69**) ,
- the sump (see **10A**, **Engine and cylinder block assembly**, **Sump: Removal - Refitting**, page **10A-25**) .

II - OPERATION FOR REMOVAL OF PART CONCERNED

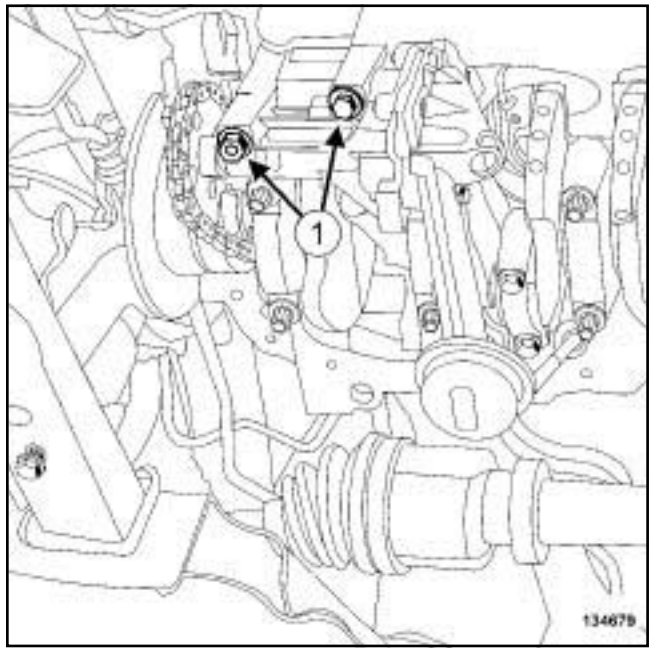

134679

❏ Remove:

- the oil pump bolts (**1**) ,
- the oil pump.

REFITTING

I - REFITTING OPERATION FOR PART CONCERNED

❏ Position the oil pump pinion on the chain.

❏ Refit the oil pump.

❏ Torque tighten the **oil pump bolts (25 N.m)**.

II - FINAL OPERATION

❏ Refit:

- the sump (see **10A**, **Engine and cylinder block assembly**, **Sump: Removal - Refitting**, page **10A-25**) ,
- the oil level sensor (see **10A**, **Engine and cylinder block assembly**, **Oil level sensor: Removal - Refitting**, page **10A-69**) .

❏ Fill up the engine oil (see **10A**, **Engine and cylinder block assembly**, **Engine oil: Draining - Refilling**, page **10A-40**) .

❏ Refit the engine undertray.

F9Q

Tightening torques ▽	
oil pump bolts	**25 N.m**
oil splash plate bolt	**25 N.m**

REMOVAL

I - REMOVAL PREPARATION OPERATION

❏ Position the vehicle on a two-post lift (see **Vehicle: Towing and lifting**) (02A, Lifting equipment).

❏ Remove:

- the engine undertray bolts,
- the engine undertray.

❏ Drain the engine oil (see **10A**, **Engine and cylinder block assembly**, **Engine oil: Draining - Refilling**, page **10A-40**) .

❏ Remove:

- the lower engine tie-bar (see **19D**, **Engine mounting**, **Lower engine tie-bar: Removal - Refitting**, page **19D-33**) ,
- the sump (see **10A**, **Engine and cylinder block assembly**, **Sump: Removal - Refitting**, page **10A-25**) .

II - OPERATION FOR REMOVAL OF PART CONCERNED

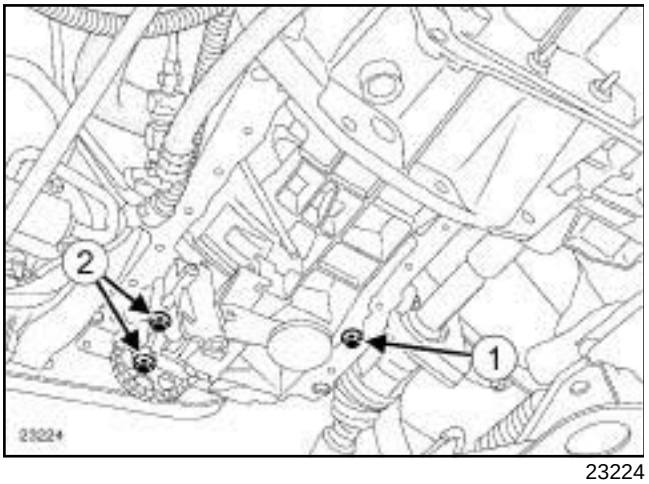

23224

❏ Remove:

- the oil splash plate bolt (**1**) ,
- the oil splash plate,
- the oil pump bolts (**2**) ,
- the oil pump.

REFITTING

I - REFITTING PREPARATION OPERATION

❏ Check for centring rings on the cylinder block.

II - REFITTING OPERATION FOR PART CONCERNED

❏ Position the oil pump pinion on the chain.

❏ Refit:

- the oil pump,
- the oil splash plate.

❏ Tighten to torque:

- the **oil pump bolts (25 N.m)**,
- the **oil splash plate bolt (25 N.m)**

III - FINAL OPERATION

❏ Refit:

- the sump (see **10A**, **Engine and cylinder block assembly**, **Sump: Removal - Refitting**, page **10A-25**) ,
- the lower engine tie-bar (see **19D**, **Engine mounting**, **Lower engine tie-bar: Removal - Refitting**, page **19D-33**) .

❏ Fill up the engine oil (see **10A**, **Engine and cylinder block assembly**, **Engine oil: Draining - Refilling**, page **10A-40**) .

❏ Refit the engine undertray.

K9K

Tightening torques ▽	
oil pump bolts	**25 N.m**

IMPORTANT
Wear leaktight gloves (Nitrile type) for this operation.

REMOVAL

I - REMOVAL PREPARATION OPERATION

❑ Position the vehicle on a two-post lift (see **Vehicle: Towing and lifting**) (02A, Lifting equipment).

❑ Remove:

- the engine cover,
- the dipstick,
- the engine undertray bolts,
- the engine undertray.

❑ Drain the engine oil (see **10A**, **Engine and cylinder block assembly**, **Engine oil: Draining - Refilling**, page **10A-40**) .

❑ Remove:

- the lower engine tie-bar (see **19D**, **Engine mounting**, **Lower engine tie-bar: Removal - Refitting**, page **19D-33**) ,
- the sump (see **10A**, **Engine and cylinder block assembly**, **Sump: Removal - Refitting**, page **10A-25**) .

II - OPERATION FOR REMOVAL OF PART CONCERNED

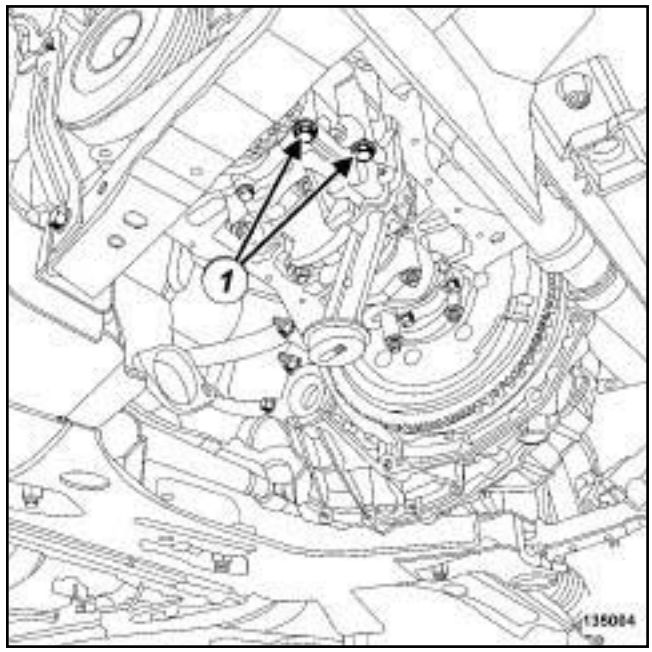

135004

❑ Remove:

- the oil pump bolts (**1**) ,
- the oil pump.

REFITTING

I - REFITTING PREPARATION OPERATION

❑ Check for oil pump centering rings on the cylinder block.

II - REFITTING OPERATION FOR PART CONCERNED

❑ Refit the oil pump.

❑ Torque tighten the **oil pump bolts (25 N.m)**.

III - FINAL OPERATION

❑ Refit:

- the sump (see **10A**, **Engine and cylinder block assembly**, **Sump: Removal - Refitting**, page **10A-25**) ,
- the lower engine tie-bar (see **19D**, **Engine mounting**, **Lower engine tie-bar: Removal - Refitting**, page **19D-33**) ,

❑ Fill up the engine oil (see **10A**, **Engine and cylinder block assembly**, **Engine oil: Draining - Refilling**, page **10A-40**) .

K9K

❑ Refit:

- the engine undertray,
- the dipstick,
- the engine cover.

F4R

Tightening torques ▽	
oil pump bolts	**25 N.m**
oil splash plate bolt	**25 Nm**

IMPORTANT
Wear leaktight gloves (Nitrile type) for this operation.

REMOVAL

I - REMOVAL PREPARATION OPERATION

❏ Position the vehicle on a two-post lift (see **Vehicle: Towing and lifting**) (02A, Lifting equipment).

❏ Remove:

- the engine undertray bolts,
- the engine undertray,
- the lower engine tie-bar (see **19D**, **Engine mounting**, **Lower engine tie-bar: Removal - Refitting**, page **19D-33**) .

❏ Drain the engine oil (see **10A**, **Engine and cylinder block assembly**, **Engine oil: Draining - Refilling**, page **10A-40**) .

❏ Remove the sump (see **10A**, **Engine and cylinder block assembly**, **Sump: Removal - Refitting**, page **10A-25**) .

II - OPERATION FOR REMOVAL OF PART CONCERNED

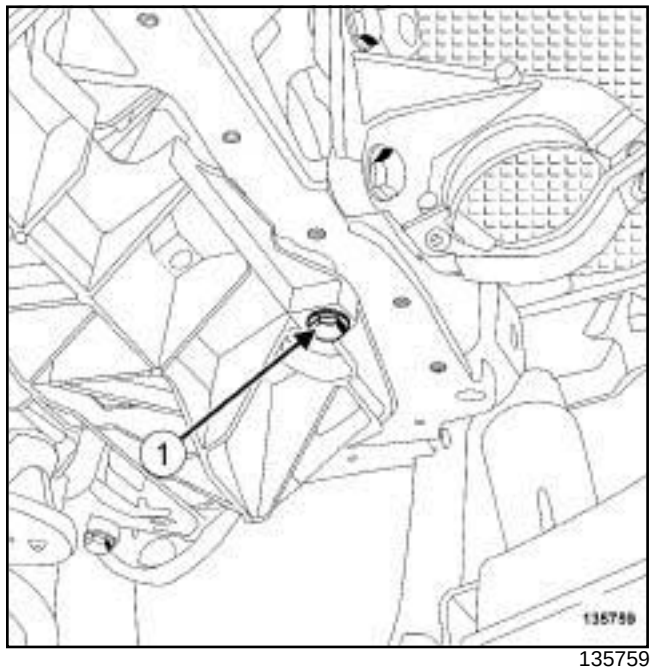

135759

❏ Remove:

- the oil splash plate bolt (**1**) ,
- the oil splash plate.

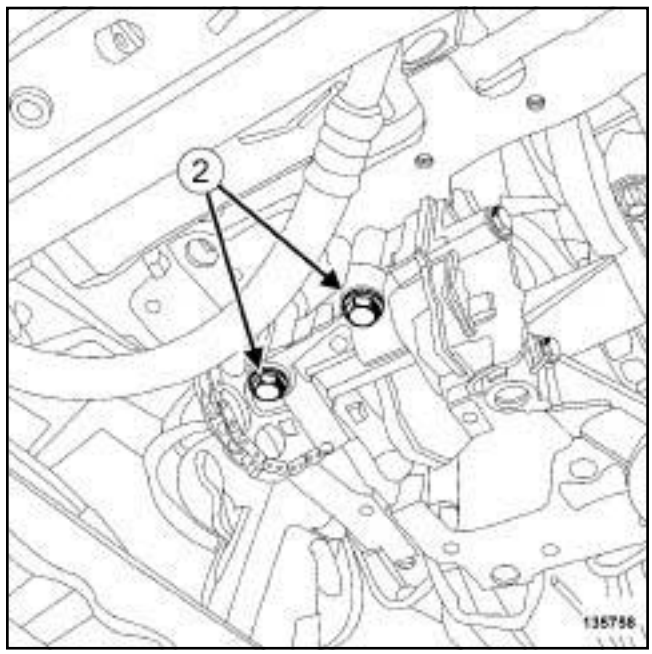

135758

❏ Remove:

- the oil pump bolts (**2**) ,
- the oil pump.

F4R

REFITTING

I - REFITTING OPERATION FOR PART CONCERNED

❏ Position the oil pump pinion on the chain.

❏ Refit the oil pump.

❏ Torque tighten the **oil pump bolts (25 N.m)**.

❏ Refit the oil splash plate.

> Note:
>
> Ensure that the oil splash plate is correctly positioned.

❏ Torque tighten the **oil splash plate bolt (25 Nm)**.

II - FINAL OPERATION

❏ Refit:

- the sump (see **10A**, **Engine and cylinder block assembly**, **Sump: Removal - Refitting**, page **10A-25**) ,
- the lower engine tie-bar (see **19D**, **Engine mounting**, **Lower engine tie-bar: Removal - Refitting**, page **19D-33**) .

❏ Fill up the engine oil (see **10A**, **Engine and cylinder block assembly**, **Engine oil: Draining - Refilling**, page **10A-40**) .

❏ Refit the engine undertray.

Essential special tooling	
Mot. 836-05	Oil pressure gauge kit.
Mot. 1495-01	22 mm socket for removing/ refitting oxygen sensors.

WARNING

Always check the oil level using the dipstick.

Do not exceed the maximum level on the dipstick (could destroy the engine).

Correct the engine oil level if necessary before delivering the vehicle to the customer.

Note:

When topping up the engine oil, always leave at least **10 minutes** before checking the level with a dipstick.

I - PARTS AND CONSUMABLES FOR THE REPAIR WORK

❏ **parts always to be replaced: Engine oil sump drain plug seal (10,03,01,04)**.

❏ **parts always to be replaced: Oil filter (10,05,05, 03)**.

❏ Consumable:

- engine oil (see **Engine oil: Specifications**) (Technical Note 6013A, 04B, Lubricants).

II - CHECKING

❏ Position the vehicle on a two-post lift (see **Vehicle: Towing and lifting**) (02A, Lifting equipment).

❏ Remove:

- the engine undertray,
- the oil pressure sensor (see **10A**, **Engine and cylinder block assembly**, **Oil pressure sensor: Removal - Refitting**, page **10A-64**) .

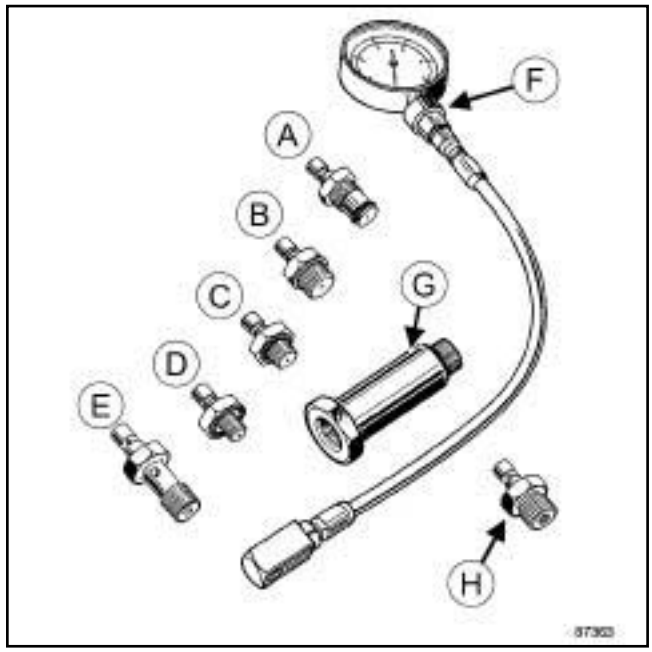

87363

❏ Engine + End pieces:

- F4R: (**G**) + (**C**) + (**F**) ,
- K9K: (**G**) + (**C**) + (**F**) ,
- F9Q: (**G**) + (**C**) + (**F**) ,
- K4M: (**G**) + (**C**) + (**F**) ,
- M4R:+ (**F**) .

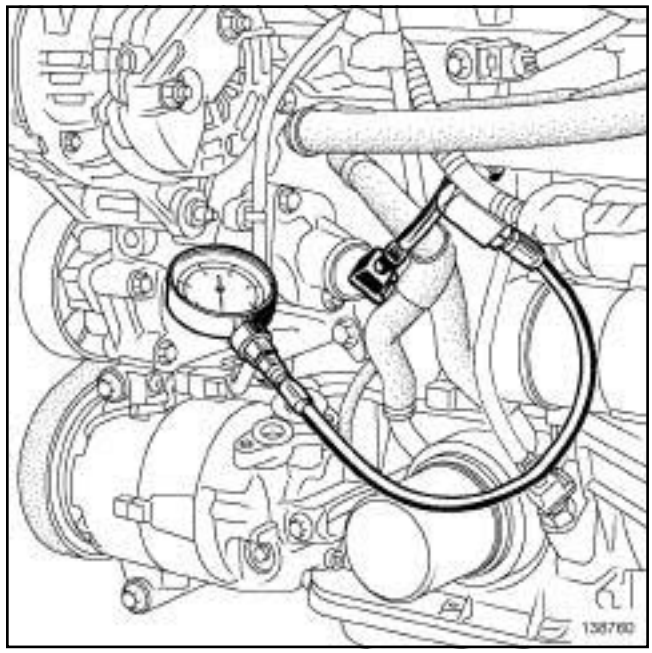
138760

❏ In place of the oil pressure sensor, fit the **(Mot. 836-05)** with suitable adapters using the **(Mot. 1495-01)** or a **22 mm** long socket.

❏ Start the vehicle.

- Monitor the engine oil pressure as the oil temperature rises (approximately **80°C** or the first time the engine cooling fan is activated); it should not be less than the pressure at idle speed.
- If the oil pressure is lower than the pressure at idle speed, check that:
  - the oil filter is not clogged,
  - dirt or swarf is not present in the engine oil,
  - the oil pump is in good condition and being correctly driven.
- F9Q engine:
  - idle speed: **1 bar**,
  - **3000 rpm** : **4.5 to 5.9 bar**.

  F4R engine:
  - idle speed: **0.5 bar**,
  - **4000 rpm** : **2.2 to 4 bar**.

  K9K engine:
  - idle speed: **0.8 bar**,
  - **4000 rpm** : **3.4 to 5.2 bar**.

  K4M engine:
  - idle speed: **0.5 bar**,
  - **4000 rpm** : **3.1 to 4.4 bar**.

  M4R engine:
  - idle speed: **0.8 bar**,
  - **2000 rpm** : **4.5 bar**.
- Switch off the engine.
- Remove the **(Mot. 836-05)** with the end pieces.
- Refit the oil pressure sensor (see **10A**, **Engine and cylinder block assembly**, **Oil pressure sensor: Removal - Refitting**, page **10A-64**) .
- Wipe any oil run-off with a cloth.
- Wait at least **10 minutes**.
- Check the oil level using the dipstick.
- Top up the oil level if necessary (see **Engine oil: Specifications**) (Technical Note 6013A, 04A, Lubricants).
- Start the vehicle and check that there are no oil leaks at the oil pressure sensor.

K4M

Essential equipment
refrigerant charging station

Tightening torques ▽	
bolts 2 and 3 of the multifunction support	**5 N.m**
multifunction support bolts (initial torque)	**5 N.m**
bolts 1, 5, 6, 4, 3, 2 of the multifunction support	**44 N.m**
bolt 7 of the multifunction support on the sump	**25 N.m**

REMOVAL

I - REMOVAL PREPARATION OPERATION

❑ Position the vehicle on a two-post lift (see **Vehicle: Towing and lifting**) (02A, Lifting equipment).

❑ Disconnect the battery (see **Battery: Removal - Refitting**) (80A, Battery).

❑ Remove the front engine cover.

❑ Drain the refrigerant circuit using a **refrigerant charging station** (see **Coolant circuit Draining - Refilling**) (62A, Air conditioning).

K4M, and 858 or 866

❑ Remove:

- the front wheels (see **Wheel: Removal - Refitting**) (35A, Wheels and tyres),
- the front section of the front wheel arch liners (see **Front wheel arch liner: Removal - Refitting**) (55A, Exterior protection).

K4M, and 848

❑ Remove:

- the front right-hand wheel (see **Wheel: Removal - Refitting**) (35A, Wheels and tyres),
- the front section of the front right-hand wheel arch liner (see **Front wheel arch liner: Removal - Refitting**) (55A, Exterior protection).

❑ Remove:

- the engine undertray bolts,
- the engine undertray,
- the accessories belt (see **11A**, **Top and front of engine**, **Accessories belt: Removal - Refitting**, page **11A-7**) .

K4M, and 858 or 866

❑ Remove:

- the front bumper (see **Front bumper: Removal - Refitting**) (55A, Exterior protection),
- the air deflectors,
- the headlights (see **Front headlight: Removal - Refitting**) (80B, Headlights),
- the front bumper supports (see **Front bumper support: Removal - Refitting**) (42A, Front upper structure),
- the audible warning (see **Horn: Removal - Refitting**) (82B, Horn),
- the front impact cross member (see **Front impact cross member: Removal - Refitting**) (41A, Front lower structure),
- the bonnet catch (see **Bonnet latch: Removal - Refitting**) (52A, Non-side opening element mechanisms),
- the engine wiring channel from the cooling fan assembly.

K4M

K4M, and 848

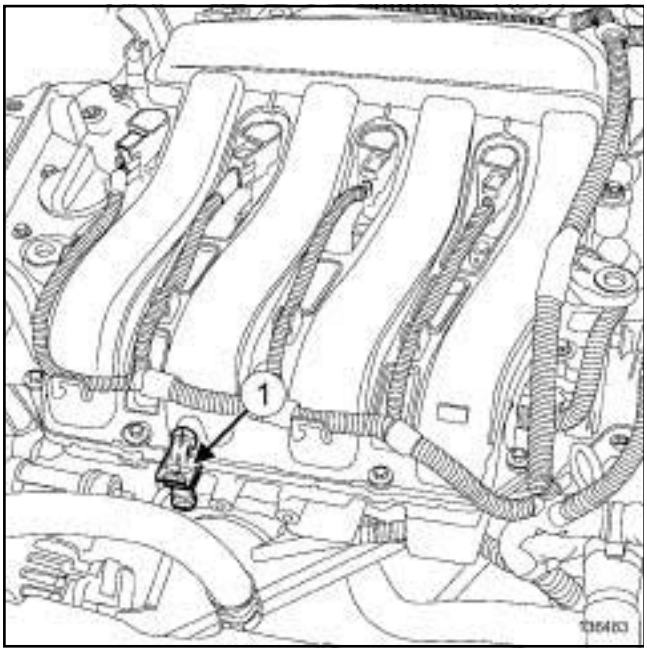

136483

❑ Disconnect the connector (**1**) from the air temperature sensor on the intake manifold.

❑ Remove the oil filter (see **10A**, **Engine and cylinder block assembly**, **Oil filter: Removal - Refitting**, page **10A-48**) .

K4M, and 858 or 866

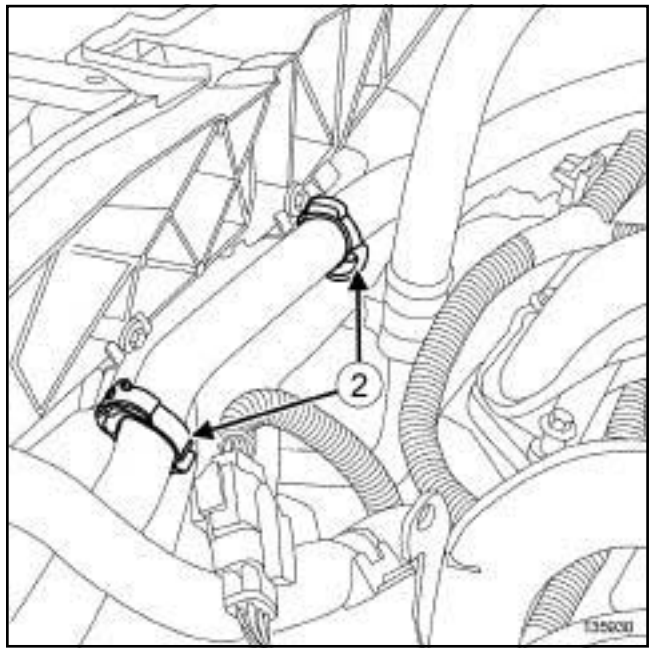

135930

❑ Unclip the hoses (**2**) from the cooling fan assembly.

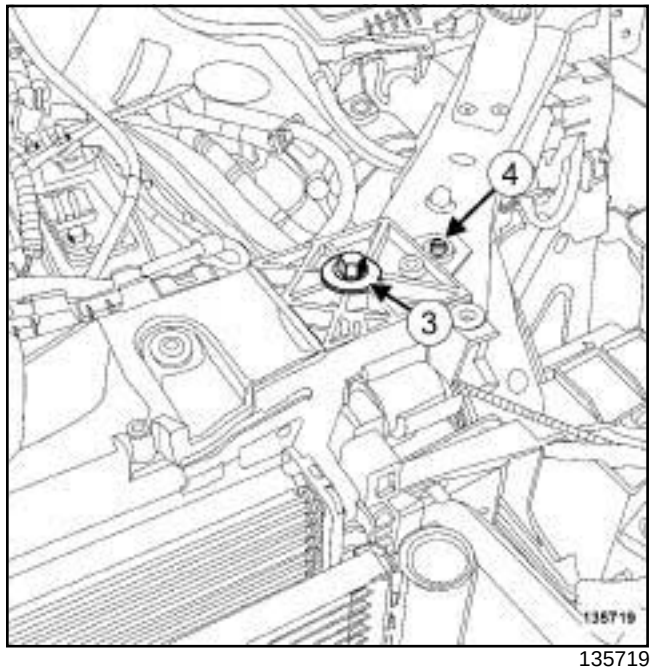

135719

❑ Remove:

- the upper bolts (**3**) from the front end panel,
- the front end panel upper clips (**4**) .

K4M

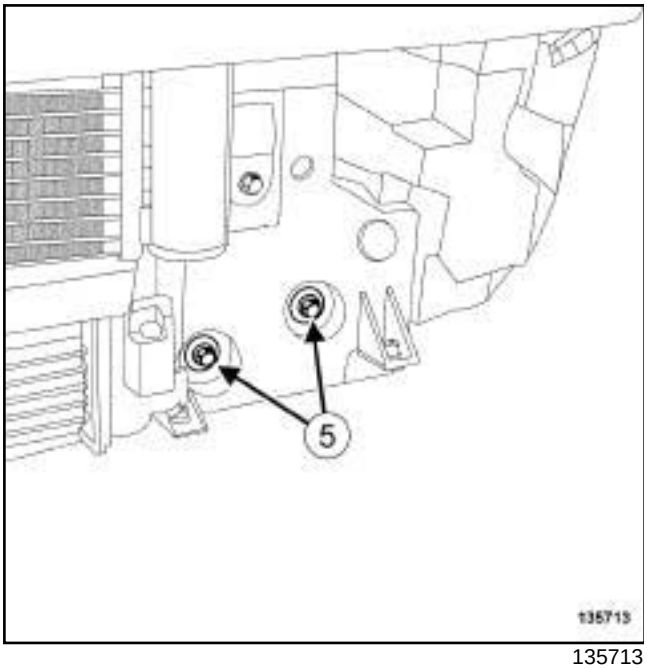

135713

❑ Remove the lower bolts (**5**) from the front end panel.

❑ Move the front end panel aside.

❑ Remove:

- the alternator (see **16A**, **Starting - Charging**, **Alternator: Removal - Refitting**, page **16A-1**) ,
- the air conditioning compressor (see **Compressor: Removal - Refitting**) (62A, Air conditioning).

II - OPERATION FOR REMOVAL OF PART CONCERNED

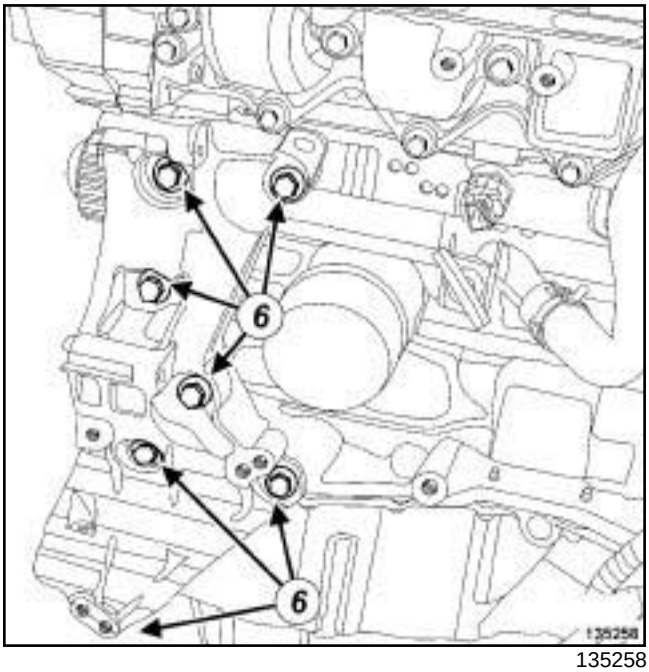

135258

❑ Remove:

- the multifunction support bolts (**6**) ,
- the multifunction support.

REFITTING

I - REFITTING OPERATION FOR PART CONCERNED

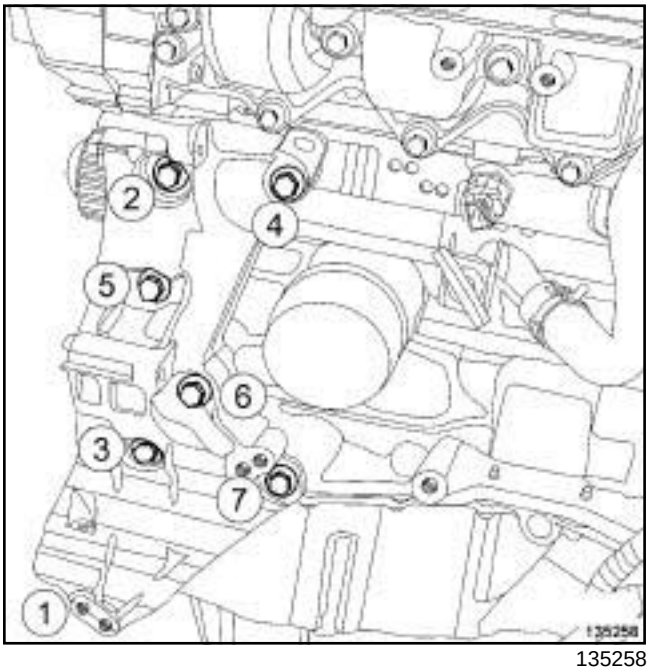

135258

❑ Refit the multifunction support.

K4M

- ❑ Pretighten to torque the **bolts 2 and 3 of the multifunction support (5 N.m)**.
- ❑ Loosen bolts 2 and 3 by one half-turn.
- ❑ Pretighten to torque and in order the **multifunction support bolts (initial torque) (5 N.m)**.
- ❑ Tighten to torque and in order:
  - the **bolts 1, 5, 6, 4, 3, 2 of the multifunction support (44 N.m)**,
  - the **bolt 7 of the multifunction support on the sump (25 N.m)**.

II - FINAL OPERATION

- ❑ Refit:
  - the air conditioning compressor (see **Compressor: Removal - Refitting**) (62A, Air conditioning),
  - the alternator (see **16A**, **Starting - Charging**, **Alternator: Removal - Refitting**, page **16A-1**) .

K4M, and 858 or 866

- ❑ Fit the front end panel.
- ❑ Refit:
  - the upper bolts on the front end panel,
  - the lower bolts on the front end panel.
- ❑ Clip on the cooling fan assembly hoses.
- ❑ Refit:
  - the upper clips on the front end panel,
  - the engine wiring channel on the cooling fan assembly,
  - the bonnet catch (see **Bonnet latch: Removal - Refitting**) (52A, Non-side opening element mechanisms),
  - the front impact cross member (see **Front impact cross member: Removal - Refitting**) (41A, Front lower structure),
  - the audible warning (see **Horn: Removal - Refitting**) (82B, Horn),
  - the front bumper supports (see **Front bumper support: Removal - Refitting**) (42A, Front upper structure),
  - the headlights (see **Front headlight: Removal - Refitting**) (80B, Headlights),
  - the air deflectors,
  - the front bumper (see **Front bumper: Removal - Refitting**) (55A, Exterior protection),

K4M, and 848

- ❑ Refit the oil filter (see **10A**, **Engine and cylinder block assembly**, **Oil filter: Removal - Refitting**, page **10A-48**) .
- ❑ Connect the air temperature sensor connector to the intake manifold.
- ❑ Top up with engine oil recommended by the manufacturer (see **Engine oil: Specifications**) (Technical Note 6013A, 04A, Lubricants).
- ❑ Refit:
  - the accessories belt (see **11A**, **Top and front of engine**, **Accessories belt: Removal - Refitting**, page **11A-7**) ,
  - the engine undertray.

K4M, and 858 or 866

- ❑ Refit:
  - the front section of the front wheel arch liners (see **Front wheel arch liner: Removal - Refitting**) (55A, Exterior protection),
  - the front wheels (see **Wheel: Removal - Refitting**) (35A, Wheels and tyres).

K4M, and 848

- ❑ Refit:
  - the front section of the front right-hand wheel arch liner (see **Front wheel arch liner: Removal - Refitting**) (55A, Exterior protection),
  - the front right-hand wheel (see **Wheel: Removal - Refitting**) (35A, Wheels and tyres).
- ❑ Connect the battery (see **Battery: Removal - Refitting**) (80A, Battery).
- ❑ Fill the refrigerant circuit using a **refrigerant charging station** (see **Coolant circuit Draining - Refilling**) (62A, Air conditioning).

K4M

❑ Refit the engine cover.

K9K

Essential equipment
refrigerant charging station

Tightening torques ▽	
bolts (1) to (6) of the multifunction support	**44 N.m**
bolt (7) of the multifunction support	**25 N.m**

REMOVAL

I - REMOVAL PREPARATION OPERATION

❑ Position the vehicle on a two-post lift (see **Vehicle: Towing and lifting**) (02A, Lifting equipment).

❑ Disconnect the battery (see **Battery: Removal - Refitting**) (80A, Battery).

❑ Drain the refrigerant fluid circuit using the **refrigerant charging station** (see **Coolant circuit Draining - Refilling**) (62A, Air conditioning).

❑ Remove:

- the engine cover,
- the front wheels (see **Wheel: Removal - Refitting**) (35A, Wheels and tyres),
- the front section of the front wheel arch liners (see **Front wheel arch liner: Removal - Refitting**) (55A, Exterior protection),
- the engine undertray bolts,
- the engine undertray,
- the accessories belt (see **11A**, **Top and front of engine**, **Accessories belt: Removal - Refitting**, page **11A-7**) ,
- the front bumper (see **Front bumper: Removal - Refitting**) (55A, Exterior protection),
- the turbocharger air outlet pipe (see **12B**, **Turbocharging**, **Intercooler air inlet pipe: Removal - Refitting**, page **12B-41**) ,
- the headlights (see **Front headlight: Removal - Refitting**) (80B, Headlights),
- the front bumper supports (see **Front bumper support: Removal - Refitting**) (42A, Front upper structure),
- the upper air deflector from the cooling radiator,
- the side air deflectors from the cooling radiator,
- the audible warning (see **Horn: Removal - Refitting**) (82B, Horn),
- the frontal impact cross member (see **Front impact cross member: Removal - Refitting**) (41A, Front lower structure),
- the bonnet catch (see **Bonnet latch: Removal - Refitting**) (52A, Non-side opening element mechanisms).

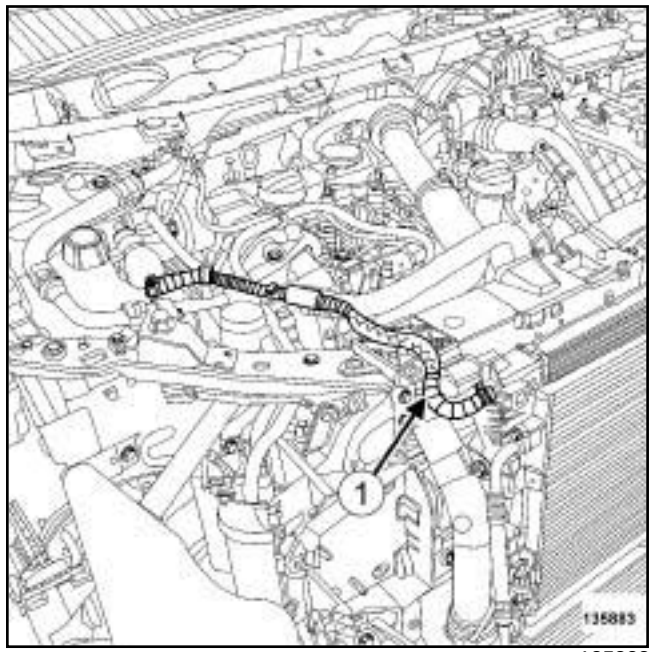

135883

❑ Unclip the expansion bottle top hose from the front end panel (**1**) .

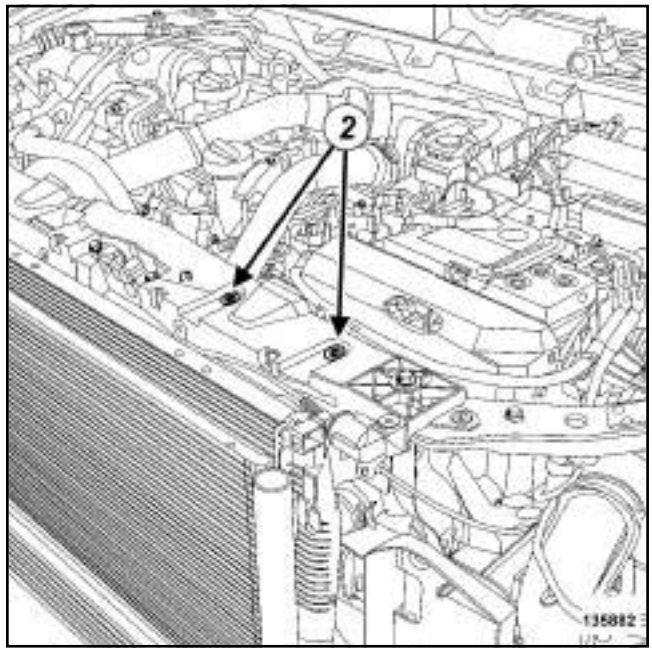

135882

❑ Remove the engine wiring channel bolts (**2**) from the front end panel.

K9K

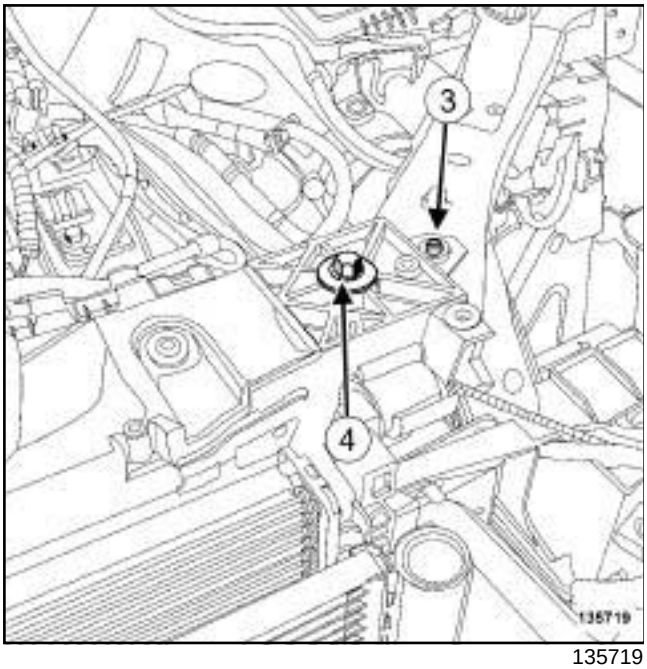

135719

❑ Remove:

- the front end panel clips (**3**) ,
- the front end panel upper bolts (**4**) .

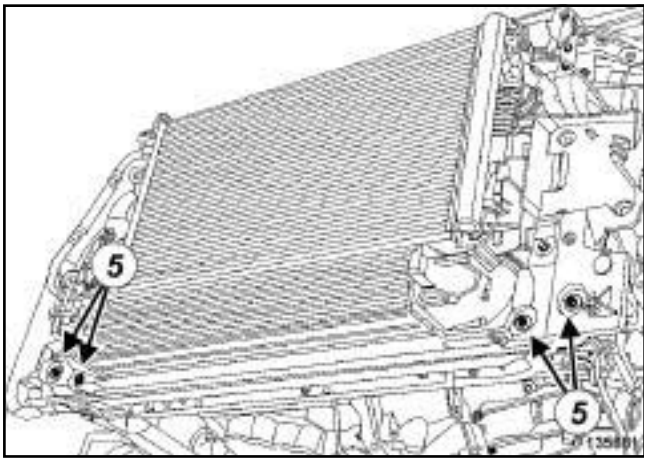

135881

❑ Remove the lower bolts (**5**) from the front end panel.

❑ Tilt the front end panel towards the front of the vehicle.

❑ Remove:

- the alternator (see **16A**, **Starting - Charging**, **Alternator: Removal - Refitting**, page **16A-1**) ,
- the air conditioning compressor (see **Compressor: Removal - Refitting**) (62A, Air conditioning).

II - OPERATION FOR REMOVAL OF PART CONCERNED

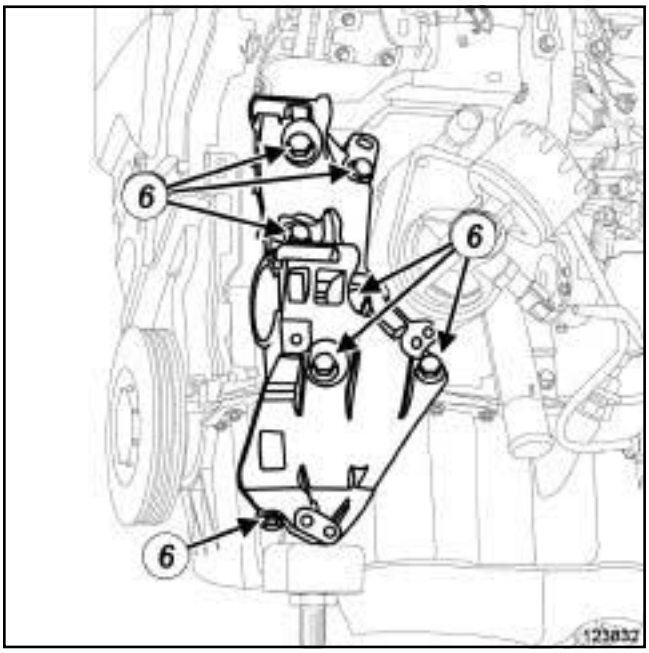

123832

❑ Remove:

- the multifunction support bolts (**6**) ,
- the multifunction support.

REFITTING

I - REFITTING OPERATION FOR PART CONCERNED

❑ Refit the multifunction support.

K9K

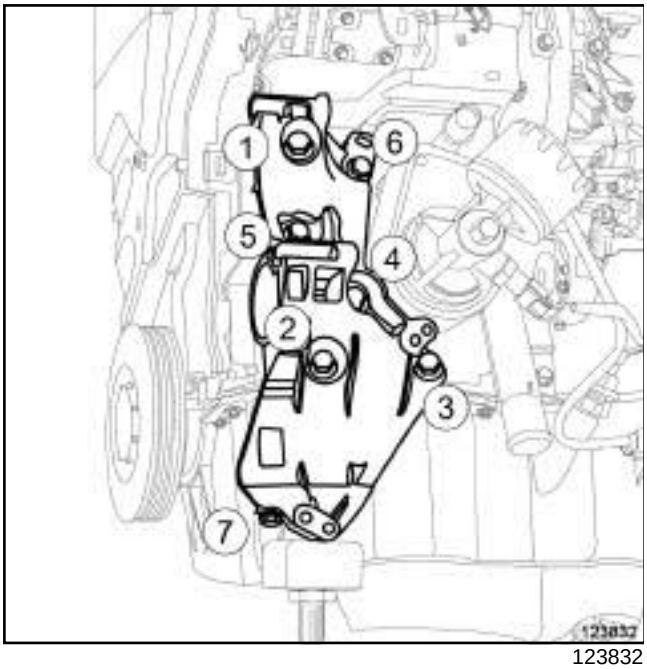

123832

❑ Tighten to torque and in order:

- the **bolts (1) to (6) of the multifunction support (44 N.m)**,
- the **bolt (7) of the multifunction support (25 N.m)**.

II - FINAL OPERATION

❑ Refit:

- the air conditioning compressor (see **Compressor: Removal - Refitting**) (62A, Air conditioning),
- the alternator (see **16A**, **Starting - Charging**, **Alternator: Removal - Refitting**, page **16A-1**) .

❑ Fit the front end panel.

❑ Refit:

- the lower bolts from the front end panel,
- the front end panel upper bolts,
- the front end panel clips,
- the bolts of the engine cooling fan assembly wiring channel on the front end panel.

❑ Clip the expansion bottle top hose onto the front end panel.

❑ Refit:

- the bonnet catch (see **Bonnet latch: Removal - Refitting**) (52A, Non-side opening element mechanisms),
- the front impact cross member (see **Front impact cross member: Removal - Refitting**) (41A, Front lower structure),
- the audible warning (see **Horn: Removal - Refitting**) (82B, Horn),
- the cooling radiator side air deflectors,
- the upper air deflector of the cooling radiator,
- the front bumper supports (see **Front bumper support: Removal - Refitting**) (42A, Front upper structure).
- the headlights (see **Front headlight: Removal - Refitting**) (80B, Headlights),
- the turbocharger air outlet pipe (see **12B**, **Turbocharging**, **Intercooler air inlet pipe: Removal - Refitting**, page **12B-41**) ,
- the front bumper (see **Front bumper: Removal - Refitting**) (55A, Exterior protection),
- the accessories belt (see **11A**, **Top and front of engine**, **Accessories belt: Removal - Refitting**, page **11A-7**) ,
- the engine undertray,
- the front section of the front wheel arch liners (see **Front wheel arch liner: Removal - Refitting**) (55A, Exterior protection),
- the front wheels (see **Wheel: Removal - Refitting**) (35A, Wheels and tyres),
- the engine cover.

❑ Connect the battery (see **Battery : Removal - Refitting**) (80A, Battery).

❑ Fill the refrigerant circuit using a **refrigerant charging station** (see **Coolant circuit Draining - Refilling**) (62A, Air conditioning).

F4R

Essential equipment
refrigerant charging station

Tightening torques ▽	
multifunction support bolts	**44 N.m**

REMOVAL

I - REMOVAL PREPARATION OPERATION

❑ Position the vehicle on a two-post lift (see **Vehicle: Towing and lifting**) (02A, Lifting equipment).

❑ Drain the refrigerant circuit using a **refrigerant charging station** (see **Coolant circuit Draining - Refilling**) .

❑ Disconnect the battery (see **Battery: Removal - Refitting**) (80A, Battery).

❑ Remove:

- the engine cover,
- the engine undertray bolts,
- the engine undertray,
- the front wheels (see **Wheel: Removal - Refitting**) (35A, Wheels and tyres),
- the front section of the front wheel arch liners (see **Front wheel arch liner: Removal - Refitting**) (55A, Exterior protection),
- the front bumper (see **Front bumper: Removal - Refitting**) (55A, Exterior protection),
- the upper air deflector,
- the side air deflectors,
- the accessories belt (see **11A**, **Top and front of engine**, **Accessories belt: Removal - Refitting**, page **11A-7**) ,
- the headlights (see **Front headlight: Removal - Refitting**) (80B, Headlights),
- the front bumper supports (see **Front bumper support: Removal - Refitting**) (42A, Front upper structure),
- the audible warning (see **Horn: Removal - Refitting**) (82B, Horn),
- the front impact cross member (see **Front impact cross member: Removal - Refitting**) (41A, Front lower structure),
- the bonnet catch (see **Bonnet latch: Removal - Refitting**) (52A, Non-side opening element mechanisms).

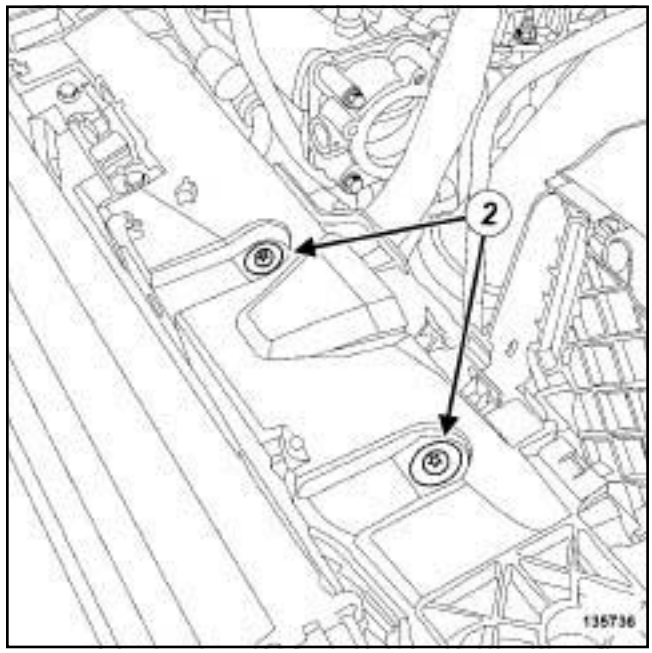

135736

❑ Remove the bolts (**2**) from the wiring channel of the engine cooling fan assembly.

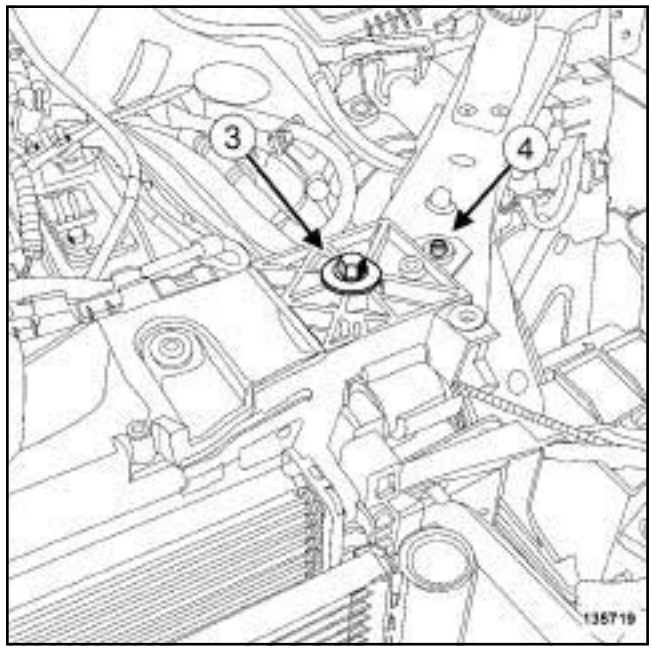

135719

❑ Remove:

- the upper bolts (**4**) from the front end panel,
- the front end panel clips (**3**) .

F4R

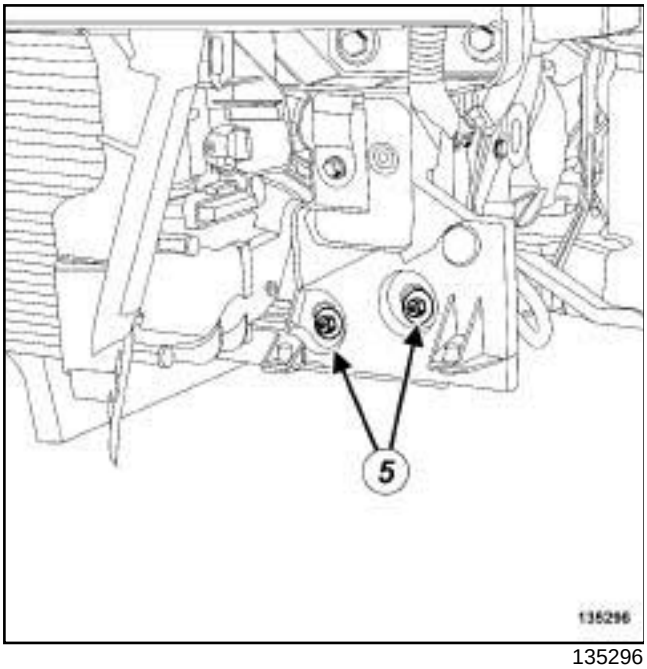

135296

❑ Remove the lower bolts (**5**) from the front end panel.

❑ Slightly tilt the front end panel towards the front of the vehicle.

❑ Remove:

- the intercooler air inlet pipe (see **12B**, **Turbocharging**, **Intercooler air inlet pipe: Removal - Refitting**, page **12B-41**) ,
- the alternator (see **16A**, **Starting - Charging**, **Alternator: Removal - Refitting**, page **16A-1**) ,
- the air conditioning compressor (see **Compressor: Removal - Refitting**) (62A, Air conditioning).

II - OPERATION FOR REMOVAL OF PART CONCERNED

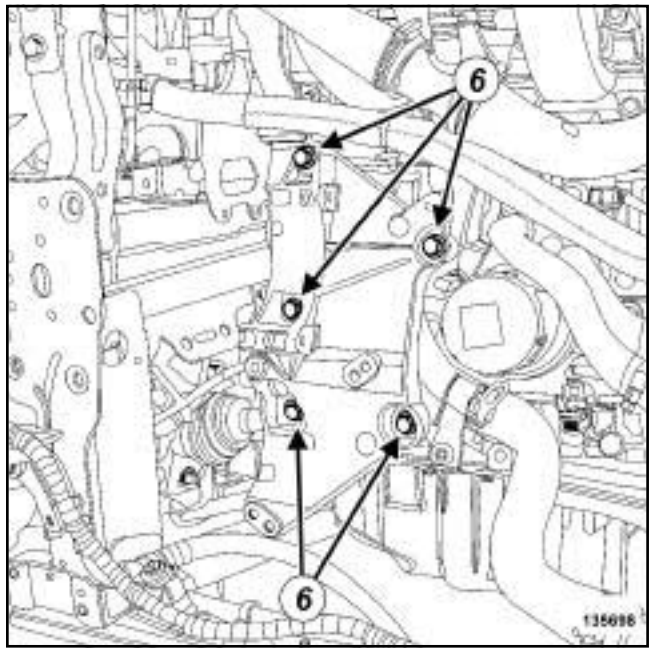

135698

❑

> Note:
>
> The multifunction support bolts are not the same length; mark their positions.

❑ Remove:

- the multifunction support bolts (**6**) ,
- the multifunction support.

REFITTING

I - REFITTING OPERATION FOR PART CONCERNED

❑ Refit the multifunction support.

❑ Fit the multifunction support bolts, in the positions marked during removal.

❑ Torque tighten the **multifunction support bolts (44 N.m)**.

II - FINAL OPERATION

❑ Refit:

- the compressor (see **Compressor: Removal - Refitting**) (62A, Air conditioning),
- the alternator (see **16A**, **Starting - Charging**, **Alternator: Removal - Refitting**, page **16A-1**) ,

F4R

- the intercooler air inlet pipe (see **12B**, **Turbocharging**, **Intercooler air inlet pipe: Removal - Refitting**, page **12B-41**) ,

❑ Fit the front end panel.

❑ Refit:

- the lower bolts from the front end panel,
- the front end panel clips,
- the front end panel upper bolts,
- the bolts for the wiring channel to the engine cooling fan assembly.

❑ Refit:

- the bonnet catch (see **Bonnet latch: Removal - Refitting**) (52A, Non-side opening element mechanisms).
- the front impact cross member (see **Front impact cross member: Removal - Refitting**) (41A, Front lower structure),
- the audible warning (see **Horn: Removal - Refitting**) (82B, Horn),
- the front bumper supports (see **Front bumper support: Removal - Refitting**) (42A, Front upper structure),
- the headlights (see **Front headlight: Removal - Refitting**) (80B, Headlights),
- the accessories belt (see **11A**, **Top and front of engine**, **Accessories belt: Removal - Refitting**, page **11A-7**) ,
- the upper air deflector,
- the side air deflectors,
- the front bumper (see **Front bumper: Removal - Refitting**) (55A, Exterior protection),
- the front section of the front wheel arch liners (see **Front wheel arch liner: Removal - Refitting**) (55A, Exterior protection),
- the front wheels (see **Wheel: Removal - Refitting**) (35A, Wheels and tyres),
- the engine undertray,
- the engine cover.

❑ Connect the battery (see **Battery : Removal - Refitting**) (80A, Battery).

❑ Perform the following operations:

- fill the refrigerant circuit using a **refrigerant charging station**. (see **Coolant circuit Draining - Refilling**) (62A, Air conditioning),
- a leak test (see **Coolant circuit check**) (62A, Air conditioning).

❑ Check that the air conditioning is working correctly (see **Air conditioning: Check**) (62A, Air conditioning).

F9Q

Essential equipment
refrigerant charging station

Tightening torques ▽	
multifunction support bolts	**44 N.m**

REMOVAL

I - REMOVAL PREPARATION OPERATION

❑ Position the vehicle on a two-post lift (see **Vehicle: Towing and lifting**) (02A, Lifting equipment).

❑ Disconnect the battery (see **Battery: Removal - Refitting**) (80A, Battery).

❑ Drain the refrigerant circuit using a **refrigerant charging station** (see **Coolant circuit Draining - Refilling**) (62A, Air conditioning).

❑ Remove:

- the engine cover,
- the engine undertray bolts,
- the engine undertray,
- the front wheels (see **Wheel: Removal - Refitting**) (35A, Wheels and tyres),
- the front section of the front wheel arch liners (see **Front wheel arch liner: Removal - Refitting**) (55A, Exterior protection),
- the front bumper (see **Front bumper: Removal - Refitting**) (55A, Exterior protection),
- the headlights (see **Front headlight: Removal - Refitting**) (80B, Headlights),
- the frontal impact cross member (see **Front impact cross member: Removal - Refitting**) (41A, Front lower structure),
- the front bumper supports (see **Front bumper support: Removal - Refitting**) (42A, Front upper structure),
- the accessories belt (see **11A**, **Top and front of engine**, **Accessories belt: Removal - Refitting**, page **11A-7**) .

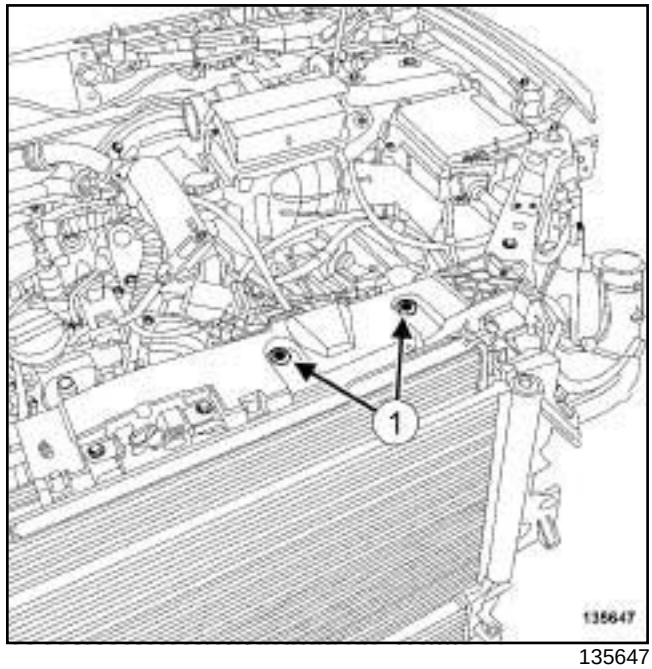

135647

❑ Remove:

- the bolts (**1**) of the engine wiring channel,
- the bonnet catch (see **Bonnet latch: Removal - Refitting**) (52A, Non-side opening element mechanisms).

F9Q

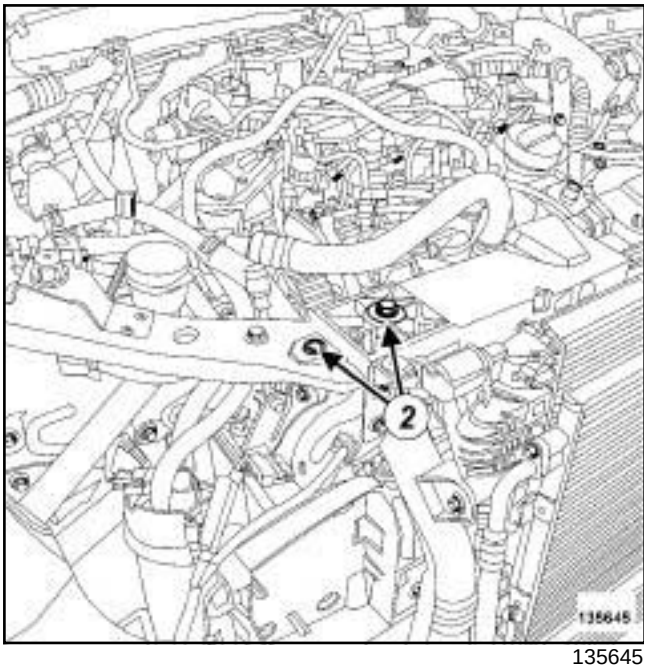

135645

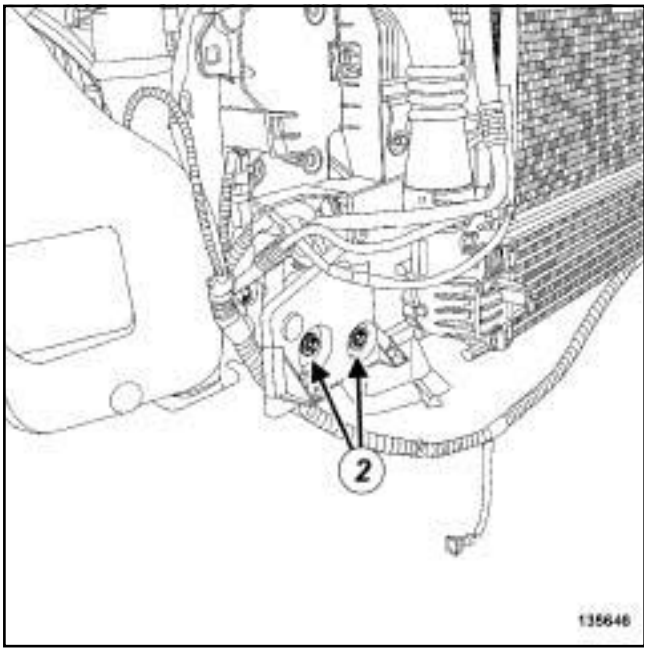

135646

❑ Remove the front end panel bolts (**2**) .

❑ Tilt the front end panel.

❑ Remove:

- the intercooler air outlet pipe (see **12B**, **Turbocharging**, **Intercooler air outlet pipe: Removal - Refitting**, page **12B-56**) ,
- the alternator (see **16A**, **Starting - Charging**, **Alternator: Removal - Refitting**, page **16A-1**) ,
- the compressor (see **Compressor: Removal - Refitting**) (62A, Air conditioning).

II - OPERATION FOR REMOVAL OF PART CONCERNED

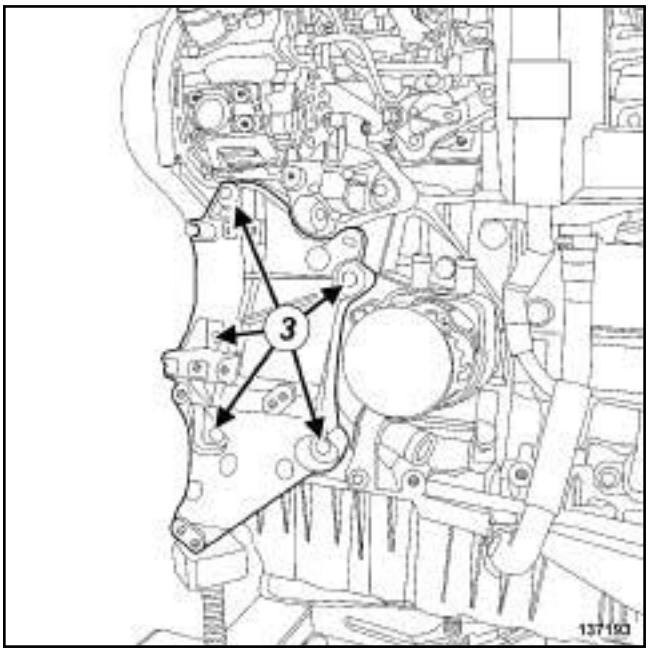

137193

❑ Remove:

- the multifunction support bolts (**3**) ,
- the multifunction support.

REFITTING

I - REFITTING OPERATION FOR PART CONCERNED

❑ Refit the multifunction support.

❑ Torque tighten the **multifunction support bolts (44 N.m)**.

II - FINAL OPERATION

❑ Refit:

- the compressor (see **Compressor: Removal - Refitting**) (62A, Air conditioning),
- the alternator (see **16A**, **Starting - Charging**, **Alternator: Removal - Refitting**, page **16A-1**) ,
- the new intercooler air outlet pipe (see **12B**, **Turbocharging**, **Intercooler air outlet pipe: Removal - Refitting**, page **12B-56**) ,
- the front end panel.

❑ Refit:

- the bonnet catch (see **Bonnet latch: Removal - Refitting**) (52A, Non-side opening element mechanisms),

- the bolts for the engine wiring harness channel,
- the accessories belt (see **11A**, **Top and front of engine**, **Accessories belt: Removal - Refitting**, page **11A-7**) ,
- the front bumper supports (see **Front bumper support: Removal - Refitting**) (42A, Front upper structure),
- the front impact cross member (see **Front impact cross member: Removal - Refitting**) (41A, Front lower structure),
- the headlights (see **Front headlight: Removal - Refitting**) (80B, Headlights),
- the front bumper (see **Front bumper: Removal - Refitting**) (55A, Exterior protection),
- the front section of the front wheel arch liners (see **Front wheel arch liner: Removal - Refitting**) (55A, Exterior protection),
- the front wheels (see **Wheel: Removal - Refitting**) (35A, Wheels and tyres),
- the engine undertray,
- the engine cover.

❑ Connect the battery (see **Battery : Removal - Refitting**) (80A, Battery).

❑ Fill the refrigerant fluid circuit using the **refrigerant charging station** (see **Coolant circuit Draining - Refilling**) (62A, Air conditioning).

.

K4M

Essential special tooling	
Ms. 583	Hose clamp pliers.
Mot. 1448	Long nose pliers for hose clips.
Mot. 1390	Support for removing/refitting the engine - gearbox assembly.

Essential equipment
refrigerant charging station

Tightening torques ▽	
bolt on the rubber pad support of the left-hand suspended engine mounting	**62 N.m**
earth nut on the body	**8 N.m**
bracket bolt of the connecting pipe between the «compressor - expansion valve» on the compressor	**8 N.m**
battery wiring nuts on the offset positive terminal	**8 N.m**
connecting pipe bolts on the condenser	**8 N.m**
air inlet pipe clip of the throttle valve	**6 N.m**

WARNING
In order to avoid any refrigerant leaks, do not damage (deform, twist, etc.) the pipe.

WARNING
To prevent moisture from entering the system, place plugs on the cold loop components which are open to the air.

IMPORTANT
Wear protective gloves during the operation.

REMOVAL

I - REMOVAL PREPARATION OPERATION

❑ Position the vehicle on a two-post lift (see **Vehicle: Towing and lifting**) (02A, Lifting equipment).

IMPORTANT
To prevent the vehicle from falling, lash it to the vehicle lift using a strap.

❑ Remove:

- the engine cover,
- the battery (see **Battery: Removal - Refitting**) (80A, Battery),
- the battery tray (see **Battery tray: Removal - Refitting**) (80A, Battery).

❑ Loosen the clip on the throttle valve air inlet pipe.

❑ Disconnect the air outlet pipe from the air filter unit.

❑ Remove

- the air outlet pipe to the air filter unit,
- the air filter unit (see **12A**, **Fuel mixture**, **Air filter unit: Removal - Refitting**, page **12A-4**) .

K4M

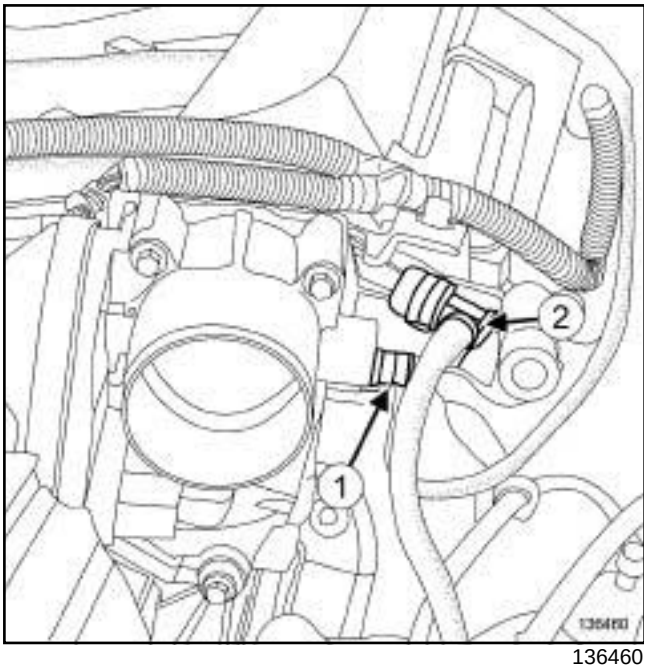

136460

- ❑ Disconnect the fuel vapour rebreathing pipe (**1**) from the throttle valve.
- ❑ Unclip the fuel vapour rebreathing pipe from the throttle valve.
- ❑ Disconnect the vacuum pipe (**2**) from the throttle valve.

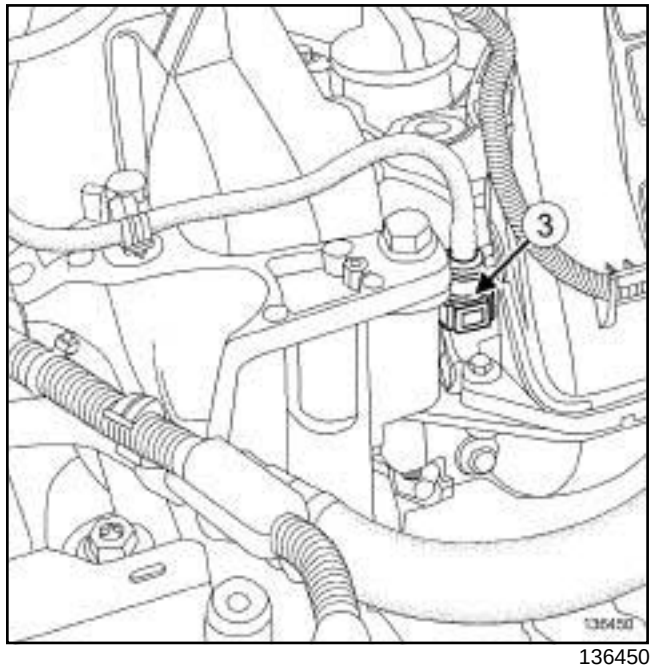

136450

- ❑ Disconnect the fuel supply pipe (**3**) from the injector rail.

WARNING

To avoid any corrosion or damage, protect the areas on which fuel is likely to run.

- ❑ Fit blanking plugs on the fuel supply pipe.

K4M

K4M, and 848

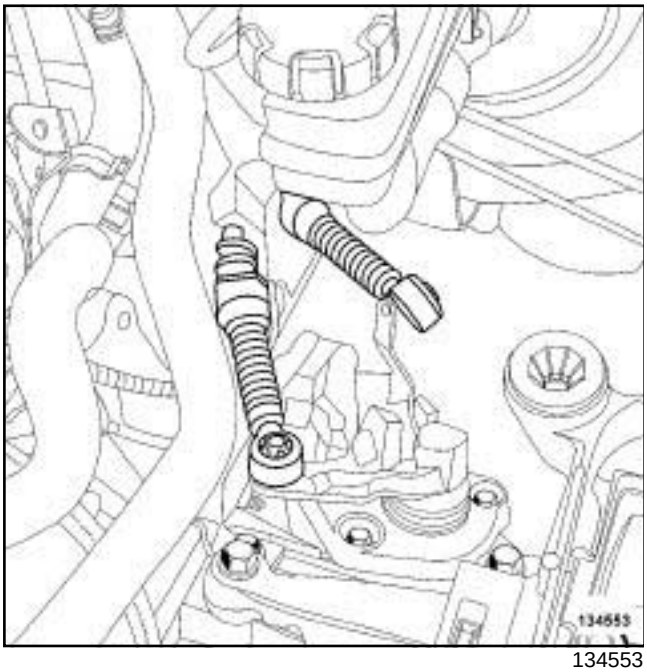

134553

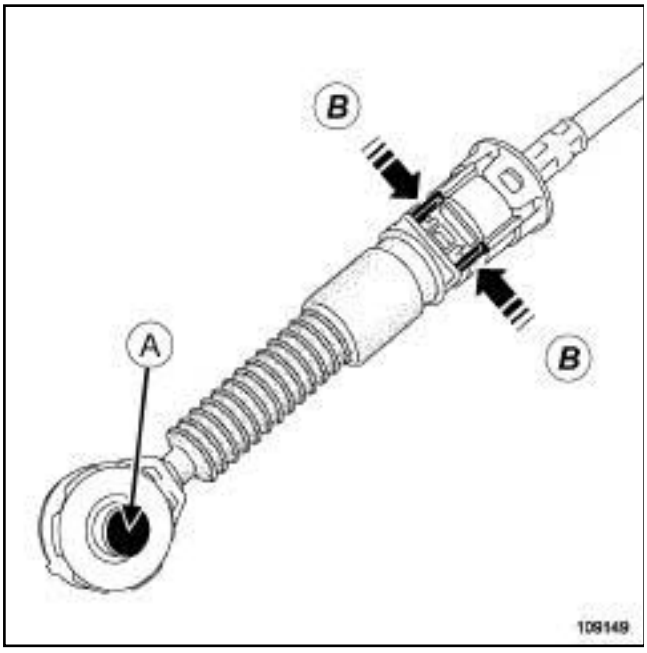

109149

❑ Unclip:

- the gear control cables from the manual gearbox by pressing at (**A**) ,
- the control cables by pushing at (**B**) .

❑ Move the gearbox control cables aside.

K4M, and 858 or 866

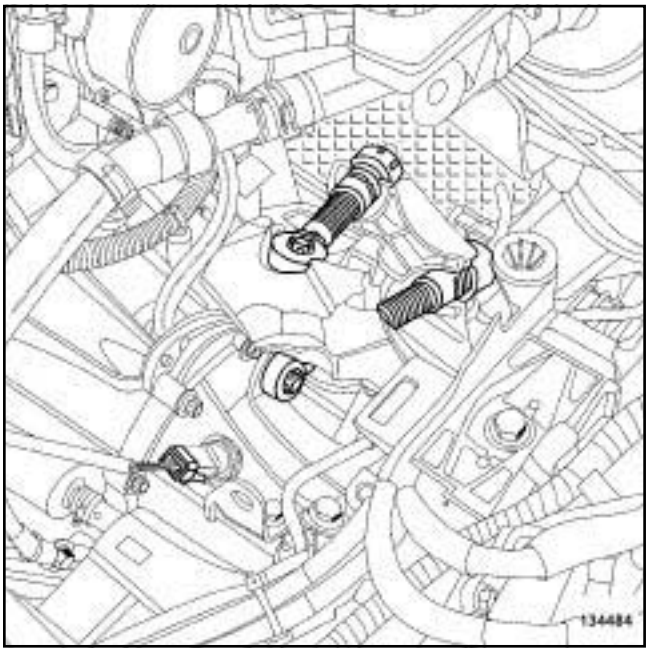

134484

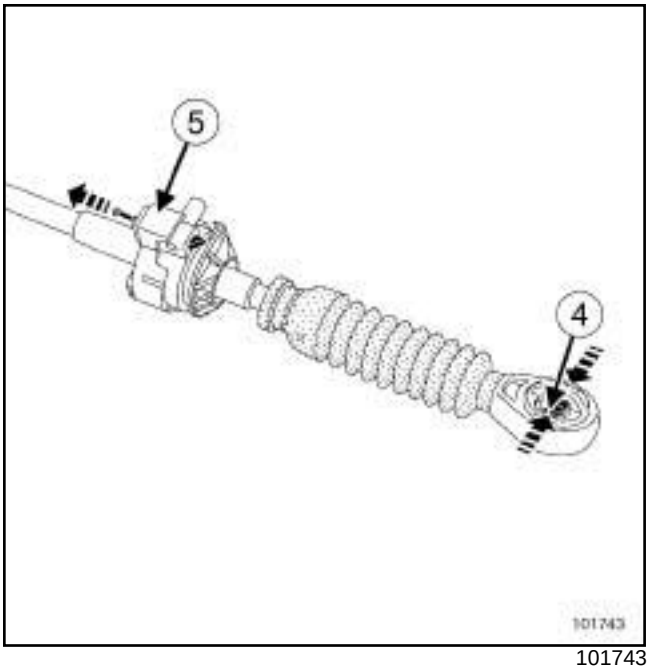

101743

❑ Unclip from the manual gearbox controls:

- the anchoring ball joints at (**4**) ,
- the sleeve stops at (**5**) .

❑ Move aside the manual gearbox controls.

K4M

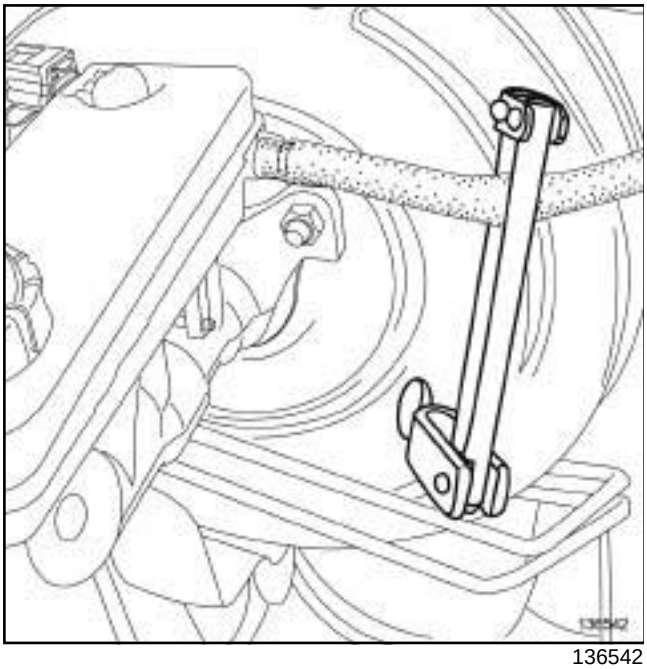

136542

- Place the tool **(Ms. 583)** between the brake fluid reservoir and the clutch master cylinder.
- Remove the hydraulic clutch pipe (see **Clutch circuit: Removal - Refitting**) (37A, Mechanical component controls).
- Remove:
  - the breather pipe onto the gearbox,
  - the front wheels (see **Wheel: Removal - Refitting**) (35A, Wheels and tyres),
  - the front section of the front wheel arch liners (see **Front wheel arch liner: Removal - Refitting**) (55A, Exterior protection),
  - the engine undertray bolts,
  - the engine undertray,
  - the front bumper (see **Front bumper: Removal - Refitting**) (55A, Exterior protection).
- Drain:
  - the cooling system (see **19A**, **Cooling**, **Cooling circuit: Draining - Refilling**, page **19A-17**) ,
  - the manual gearbox (see **Manual gearbox oil: Draining - Refilling**) (21A, Manual gearbox).
  - the refrigerant circuit using a **refrigerant charging station** (see **Coolant circuit Draining - Refilling**) (62A, Air conditioning),
  - the engine oil if necessary (see **10A**, **Engine and cylinder block assembly**, **Engine oil: Draining - Refilling**, page **10A-40**) .

JH3

- Disconnect the reverse gear switch connector.

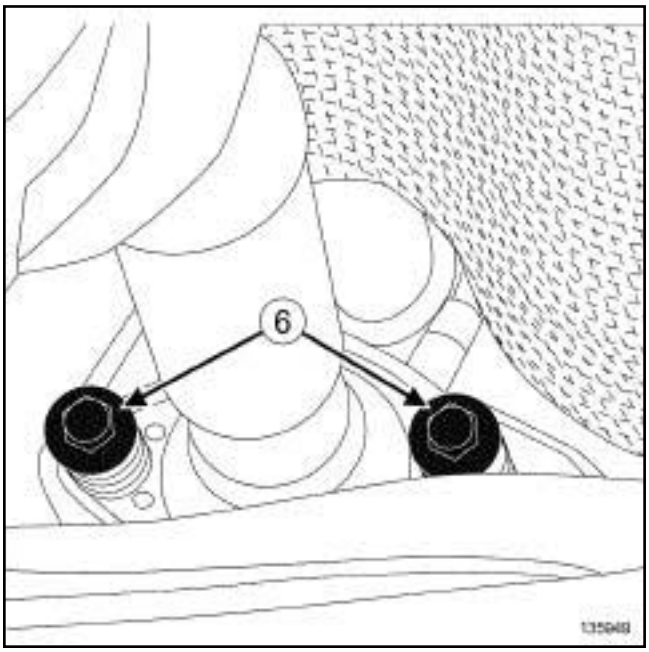

135949

- Remove:
  - the bolts (**6**) from the exhaust bracket,
  - the exhaust flange ring,
  - the lower engine tie-bar (see **19D**, **Engine mounting**, **Lower engine tie-bar: Removal - Refitting**, page **19D-33**) ,
  - the front right-hand wheel driveshaft (see **Front right-hand wheel driveshaft: Removal - Refitting**) (29A, Driveshafts),
  - the front left-hand wheel driveshaft (see **Front left-hand wheel driveshaft: Removal - Refitting**) (29A, Driveshafts),

K4M

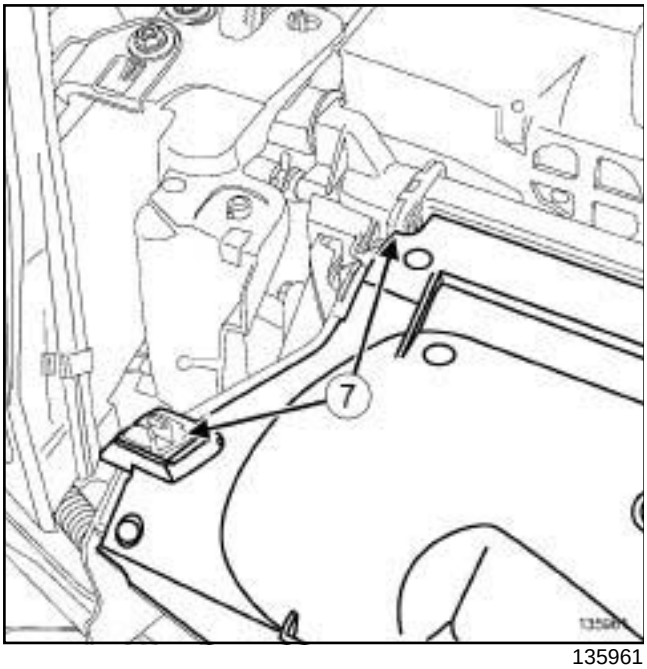

135961

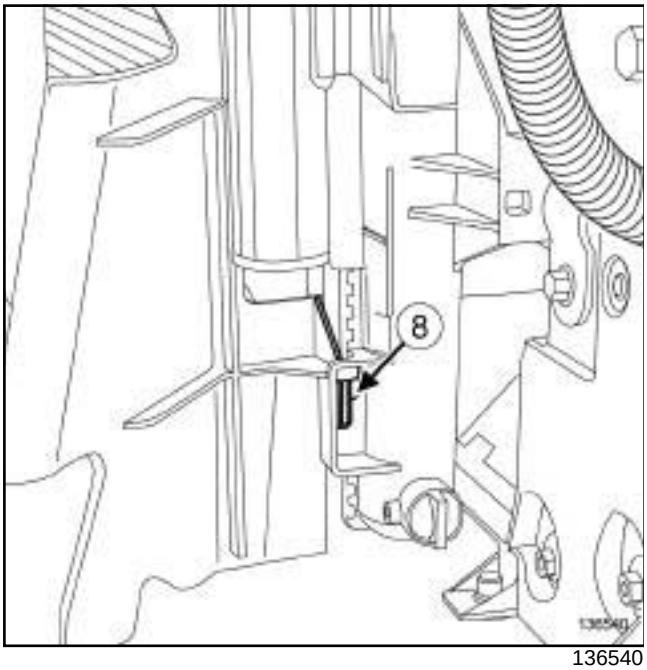

136540

❑ Unclip the deflectors at (**7**) and (**8**) .

❑ Remove:

- the headlights (see **Front headlight: Removal - Refitting**) (80B, Headlights),
- the front bumper supports (see **Front bumper support: Removal - Refitting**) (42A, Front upper structure),
- the audible warning (see **Horn: Removal - Refitting**) (82B, Horn),
- the front impact cross member (see **Front impact cross member: Removal - Refitting**) (41A, Front lower structure),
- the radiator mounting cross member (see **Radiator support cross member: Removal - Refitting**) (31A, Front axle components),
- the bonnet catch (see **Bonnet latch: Removal - Refitting**) (52A, Non-side opening element mechanisms).

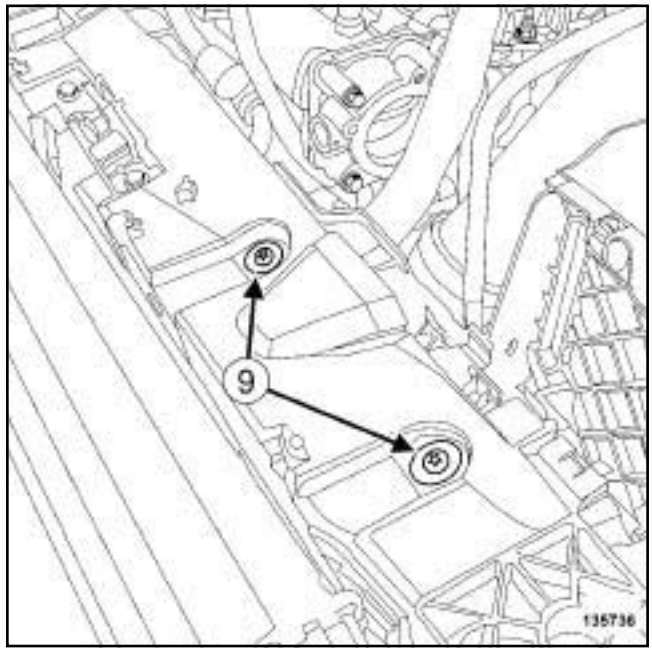

135736

❑ Remove the bolts (**9**) of the engine wiring channel from the cooling fan assembly.

K4M

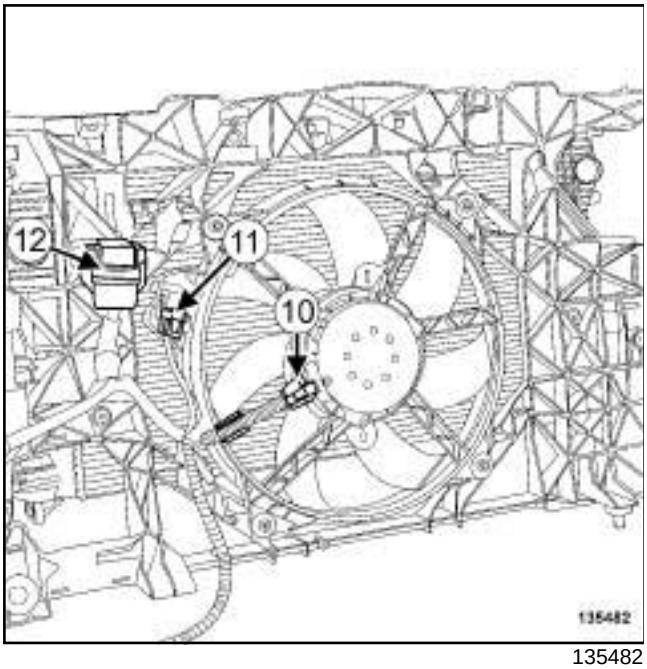

135482

❑ Disconnect from the cooling fan assembly:

- the connector (**10**) ,
- the resistor connector (**11**) ,
- the relay unit (**12**) of the front end panel.

❑ Unclip the cooling fan assembly wiring.

❑ Move aside the cooling fan assembly wiring.

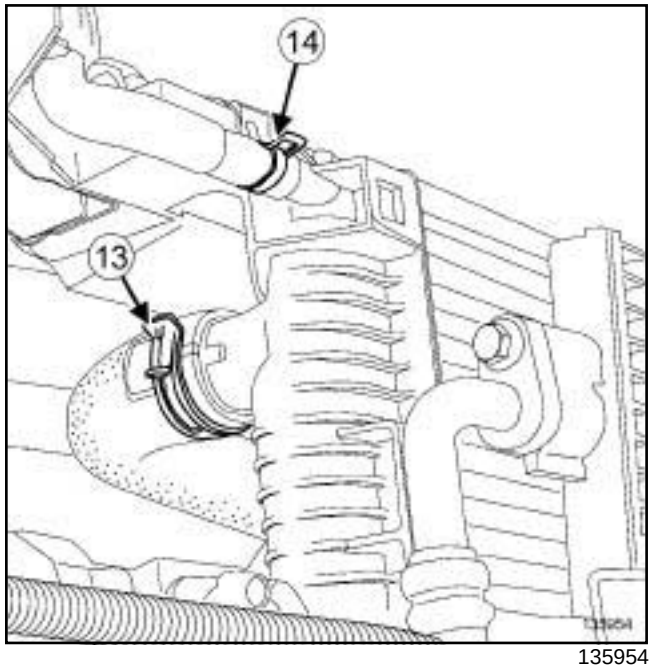

135954

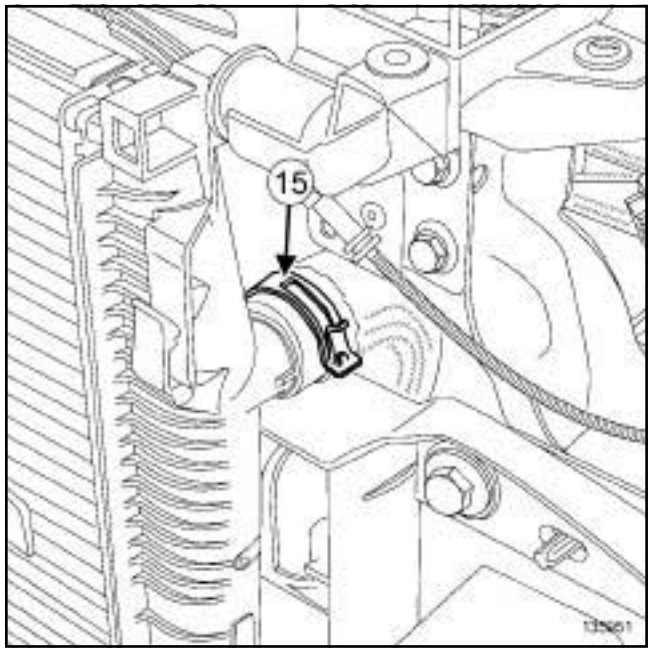

135951

❑ Remove using the **(Mot. 1448)** :

- the top cooling hose clip from the cooling radiator,
- the expansion bottle degassing hose clip from the cooling radiator,
- the bottom cooling hose clip from the cooling radiator.

❑ Disconnect:

- the top cooling hose (**13**) from the cooling radiator,
- the expansion bottle degassing hose (**14**) from the cooling radiator,

K4M

- the bottom cooling hose (**15**) from the cooling radiator.

K4M

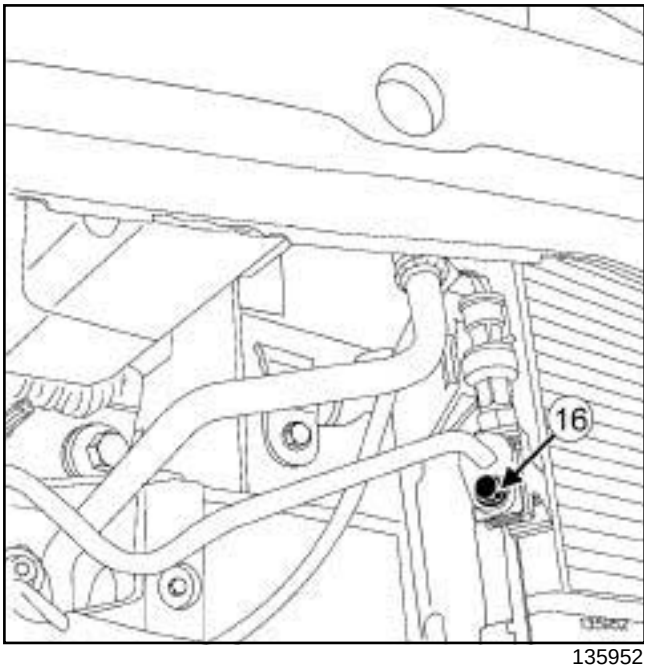

135952

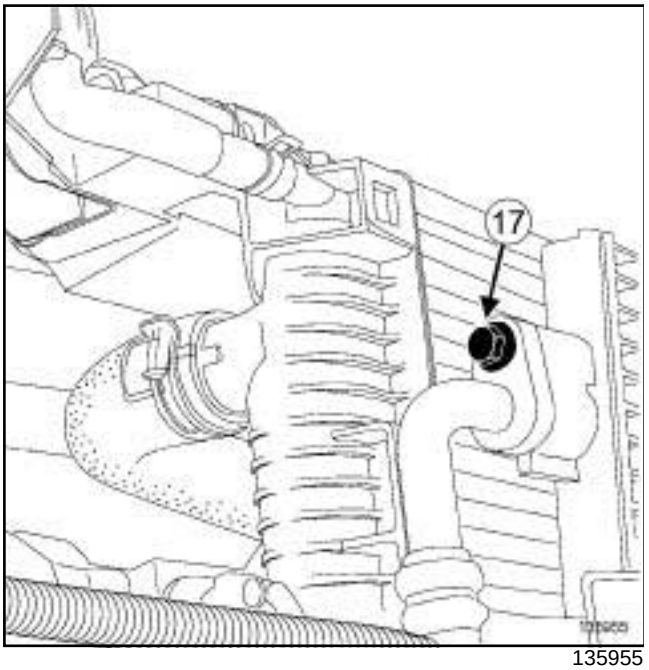

135955

❑ Remove:

- the bolt (**16**) of the « condenser - expansion valve » connecting pipe bracket,
- the bolt (**17**) for the « compressor - condenser » connecting pipe bracket.

❑ Disconnect:

- the « condenser - expansion valve » connecting pipe from the condenser,
- the « compressor - condenser » connecting pipe on the condenser.

❑ Remove:

- the seal of the « condenser - expansion valve » connecting pipe,
- the seal of the « compressor - condenser » connecting pipe.

❑ Insert the blanking plugs.

❑ Disconnect the pressostat connector from the condenser.

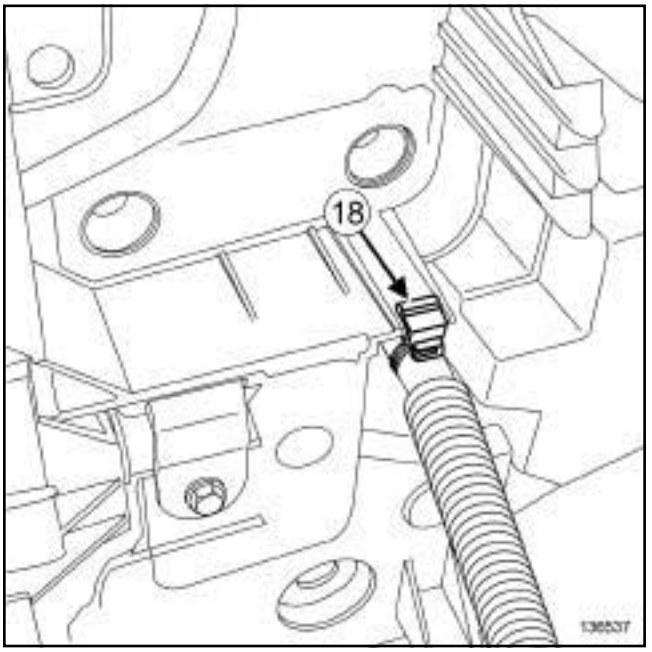

136537

❑ Unclip the wiring of the right-hand headlight (**18**) on the front end panel.

K4M

HEADLIGHT WASHERS WITH BLADE

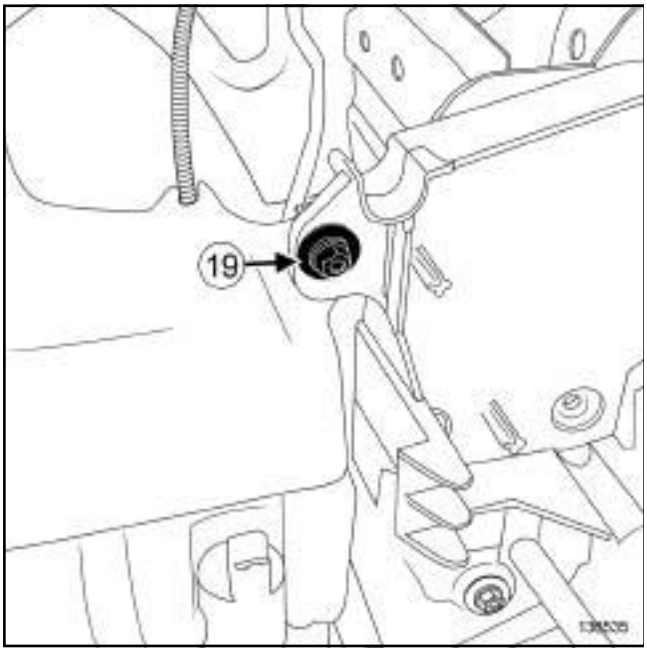

136535

❑ Remove the bolt (**19**) between the windscreen washer reservoir and the front end panel.

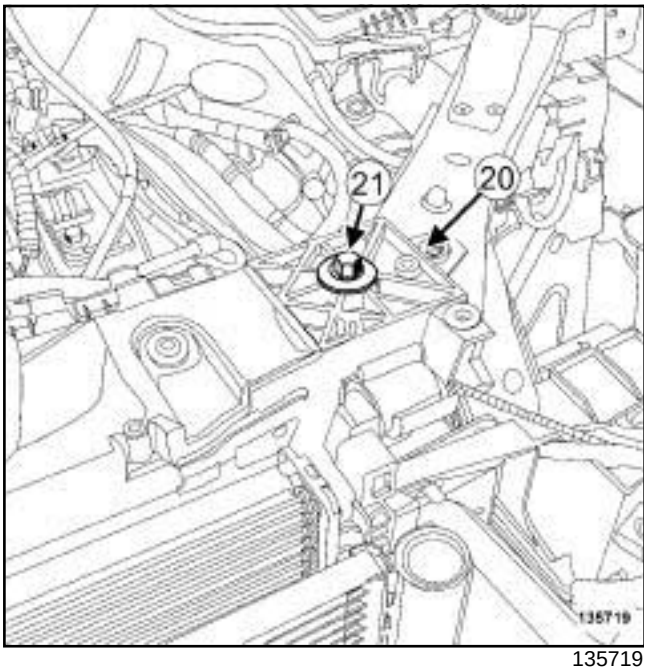

135719

❑ Remove:

- the front end panel clips (**20**) ,
- the front end panel bolts (**21**) ,
- the front of the vehicle.

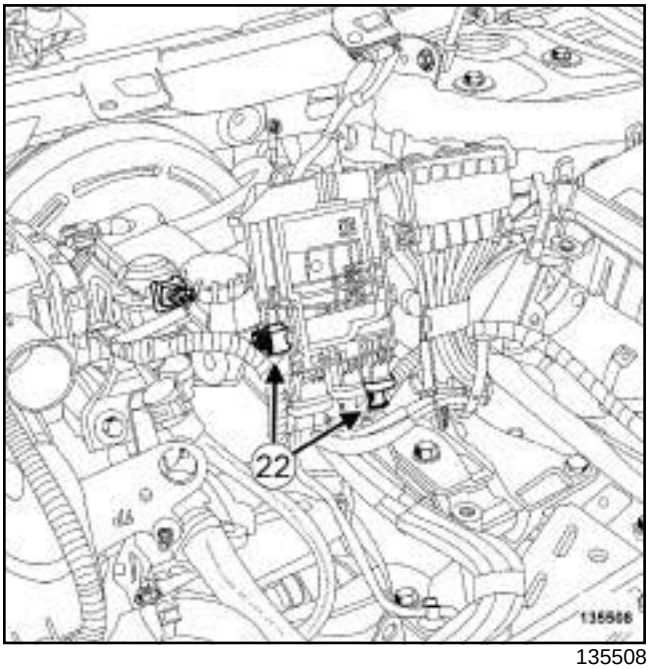

135508

❑ Disconnect the connectors (**22**) from the offset positive terminal.

❑ Unclip the offset positive terminal wiring from the offset positive terminal.

135507

❑ Remove the battery cable nuts (**23**) from the offset positive terminal.

❑ Move aside the battery cables.

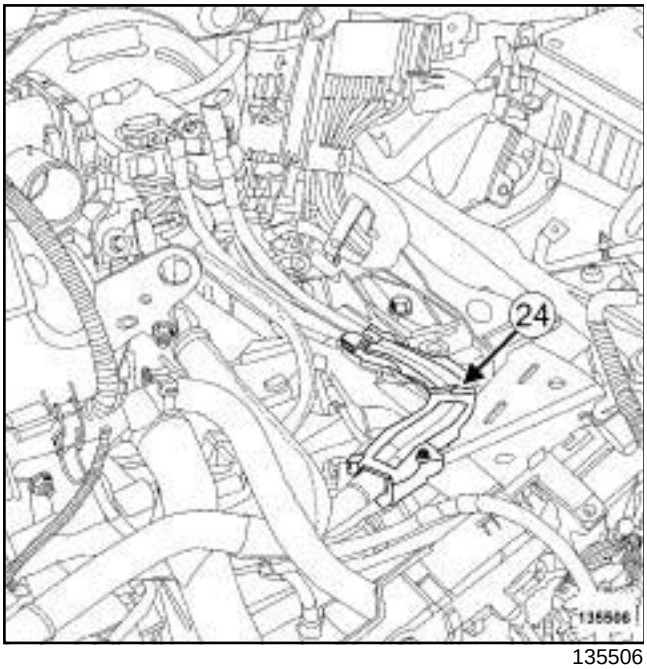

135506

❑ Unclip the battery wiring channel (**24**) from the left-hand suspended engine mounting.

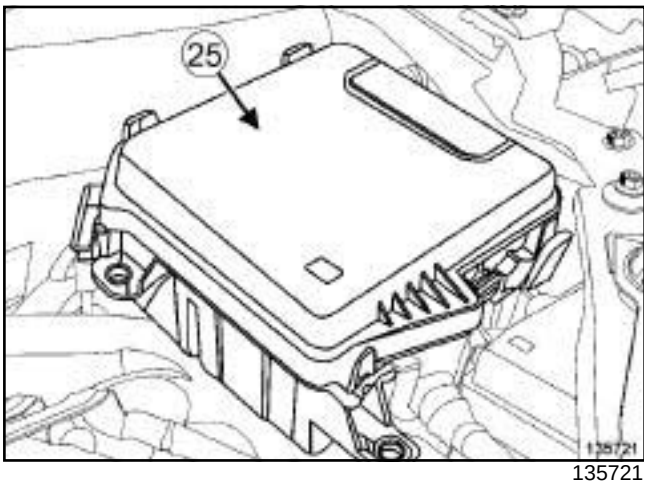

135721

❑ Remove the cover (**25**) from the Protection and Switching Unit.

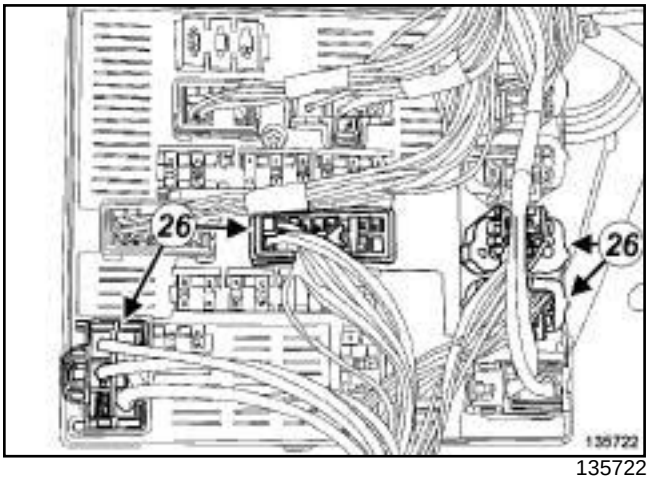

135722

❑ Remove the connectors (**26**) from the Protection and Switching Unit.

❑ Remove:

- the Protection and Switching Unit,
- the engine wiring.

❑ Remove the air resonator (see **12A**, **Fuel mixture**, **Air resonator: Removal - Refitting**, page **12A-1**) .

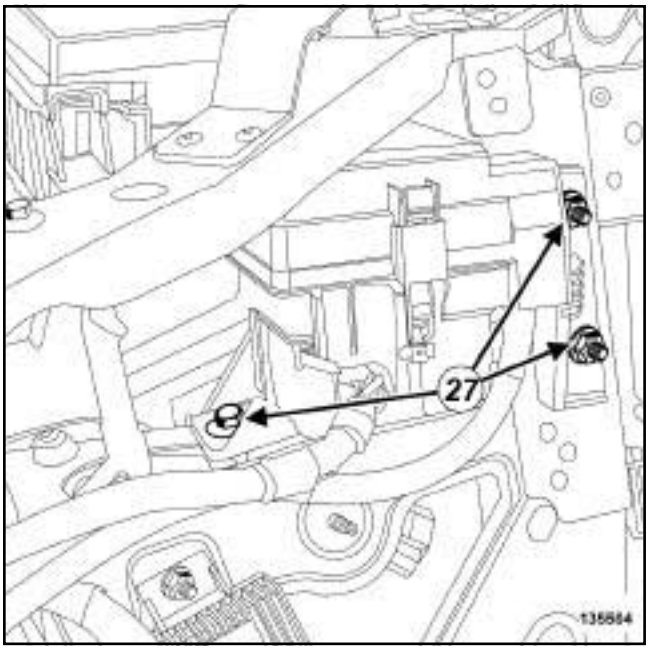

135504

❑ Remove:

- the bolts (**27**) from the fuse box,
- the fuse box.

❑ Disconnect:

- the windscreen washer pump connector,
- the windscreen washer pump wiring.

K4M

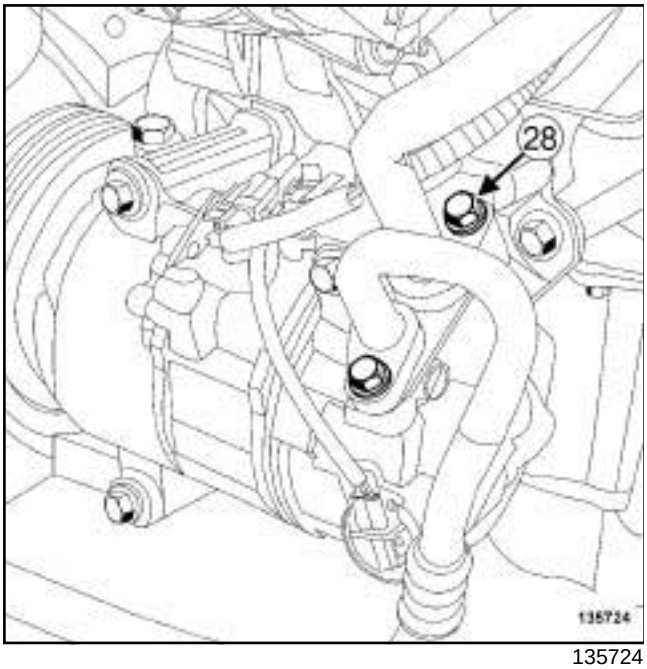

135724

- ❑ Remove the bolt (**28**) from the « compressor - expansion valve » connecting pipe bracket.
- ❑ Disconnect the «compressor - expansion valve» connecting pipe from the compressor.
- ❑ Remove the seal from the « compressor - expansion valve » connecting pipe.
- ❑ Insert the blanking plugs.

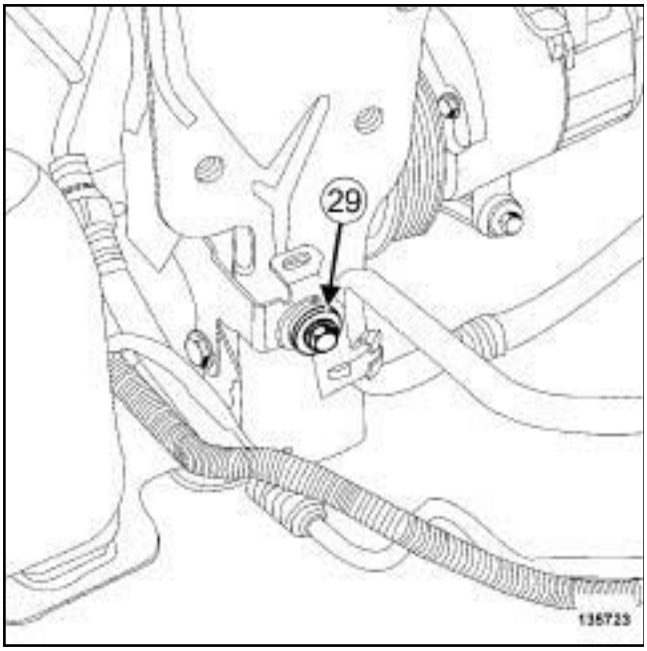

135723

- ❑ Remove the bolt of the «compressor - condenser» connecting pipe support at (**29**) .
- ❑ Move aside the «compressor - condenser» connecting pipe.

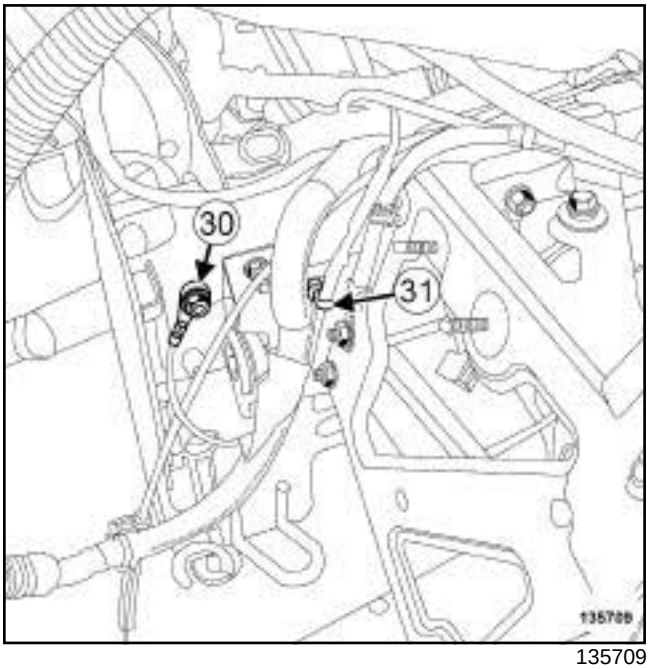

135709

- ❑ Remove:
  - the earth nut on the body,
  - the earth terminal on the body (**30**) .
- ❑ Disconnect the earth wiring on the body at (**31**) .

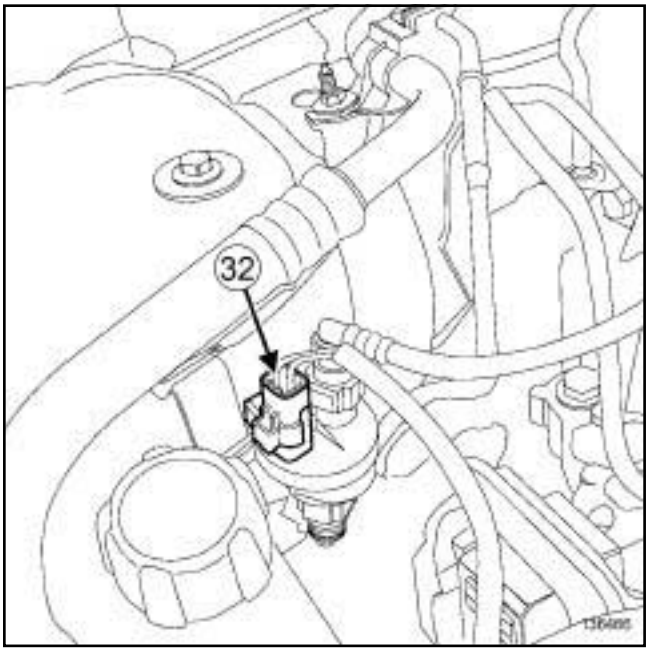

136466

- ❑ Remove the fuel vapour absorber connector (**32**) .
- ❑ Disconnect the fuel vapour absorber wiring:
  - on the expansion bottle,
  - on the body.
- ❑ Remove the fuel vapour absorber wiring.

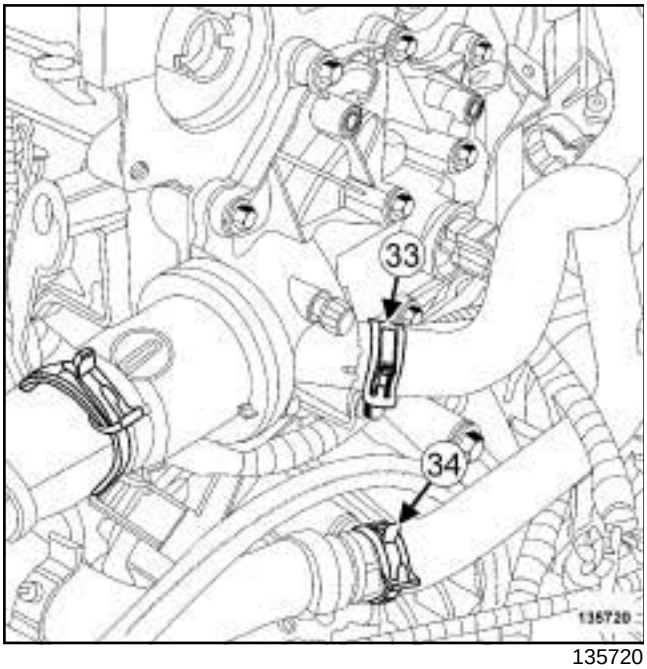

135720

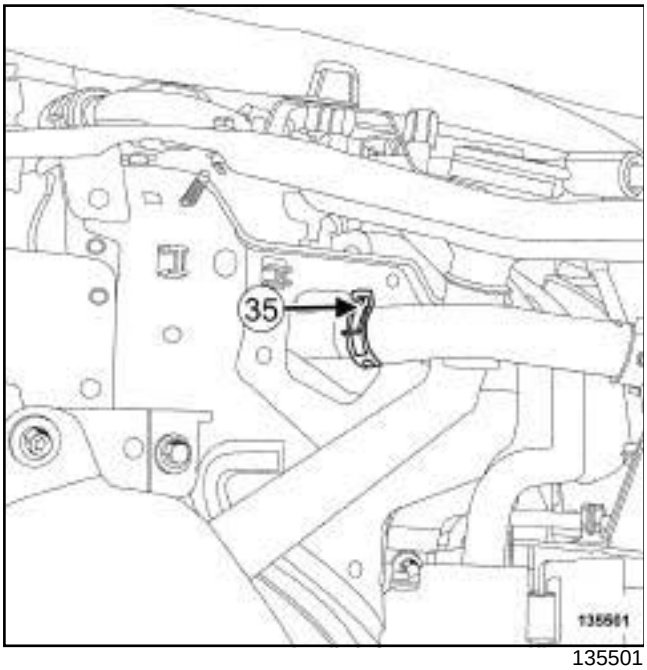

135501

❑ Remove using the **(Mot. 1448)** :

- the clip (**33**) of the hose between the heater matrix and the coolant pump inlet pipe,
- the clip (**34**) of the hose between the heater matrix and the coolant outlet unit,
- the clip (**35**) of the expansion bottle outlet hose.

❑ Disconnect:

- the hose between the heater matrix and the coolant pump inlet pipe,
- the hose between the heater matrix and the coolant outlet unit,
- the expansion bottle outlet hose.

II - OPERATION FOR REMOVAL OF PART CONCERNED

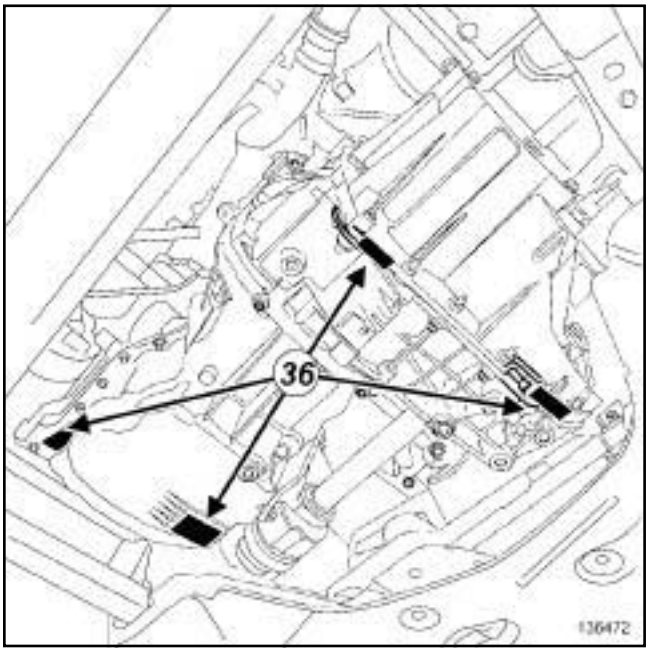

136472

❑ Mark the positions of the suspended engine mountings on the body.

❑ Support the « engine - gearbox » assembly on the engine marks (**36**) with the **(Mot. 1390)**.

❑ Remove the right-hand suspended engine mounting (see **19D**, **Engine mounting**, **Right-hand suspended engine mounting: Removal - Refitting**, page **19D-18**) .

K4M

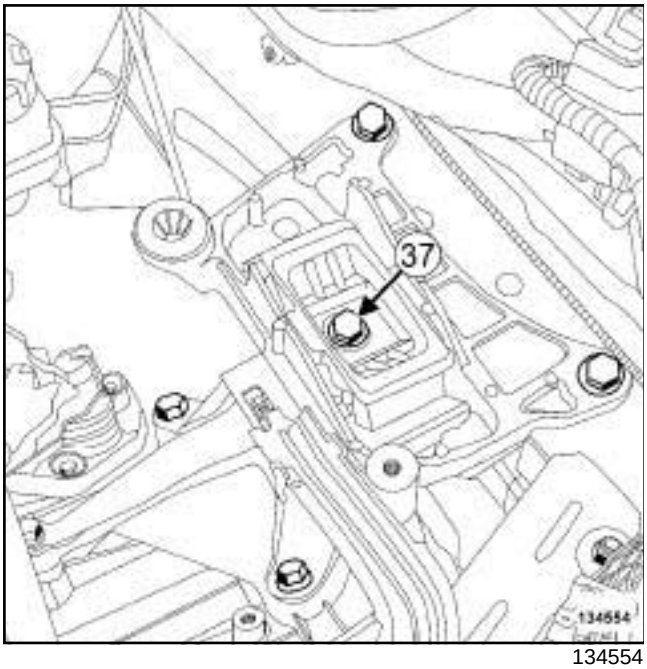

134554

❑ Remove the bolt (**37**) on the rubber pad support of the left-hand suspended engine mounting.

❑ Raise the vehicle, moving the engine towards the front.

❑ Remove the « engine and gearbox » assembly.

REFITTING

I - REFITTING PREPARATION OPERATION

❑ For standard engine replacements (see **Engine: Standard replacement**) (Technical Note 6023A, 10A, Engine and peripherals).

❑ **parts always to be replaced: refrigerant pipe seal (30,02,02,52)**.

II - REFITTING OPERATION FOR PART CONCERNED

❑ Position the « engine-gearbox » assembly in the vehicle.

❑ Refit the bolt on the rubber pad support of the left-hand suspended engine mounting.

❑ Torque tighten the **bolt on the rubber pad support of the left-hand suspended engine mounting (62 N.m)**.

❑ Refit the right-hand suspended engine mounting (see **19D**, **Engine mounting**, **Right-hand suspended engine mounting: Removal - Refitting**, page **19D-18**) .

❑ Remove the **(Mot. 1390)** from the « engine - gearbox » assembly.

III - FINAL OPERATION

❑ Connect:

- the hose between the heater matrix and the coolant pump inlet pipe,
- the hose between the heater matrix and the coolant outlet unit,
- the expansion bottle outlet hose.

❑ Using the **(Mot. 1448)**, fit:

- the clip between the heater matrix and the coolant pump inlet pipe,
- the clip between the heater matrix and the coolant outlet unit,
- the expansion bottle outlet hose clip.

❑ Fit the fuel vapour absorber wiring in place.

❑ Connect the fuel vapour absorber wiring:

- on the expansion bottle,
- the body.

❑ Refit:

- the fuel vapour absorber connector,
- the earth terminal on the body,
- the earth nut on the body.

❑ Torque tighten the **earth nut on the body (8 N.m)**.

❑ Connect the earth wiring on the body.

WARNING

Do not remove the blanking plugs from each component until the last moment.

Also, do not remove the components from their packaging until they are to be fitted to the vehicle.

WARNING

To avoid any leaks, check that the pipe surface is sound before positioning the new seal. The surface must be clean and scratch free.

❑ Remove the blanking plugs.

❑ Lubricate a new seal with the recommended air conditioning oil to make fitting easier (see **Air conditioning: Parts and consumables for the repair work**) (62A, Air conditioning).

K4M

- ❑ Fit a new seal on the «compressor - expansion valve » connecting pipe.
- ❑ Couple the « compressor - expansion valve » connecting pipe on the compressor.
- ❑ Refit the bolt of the «compressor - expansion valve » connecting pipe bracket.
- ❑ Torque tighten the **bracket bolt of the connecting pipe between the «compressor - expansion valve » on the compressor (8 N.m)**.
- ❑ Fit the « compressor - condenser » connecting pipe.
- ❑ Refit the «compressor - condenser» connecting pipe support.
- ❑ Connect:
  - the windscreen washer pump connector,
  - the wiring.
- ❑ Refit:
  - the fuse box,
  - the air resonator (see **12A**, **Fuel mixture**, **Air resonator: Removal - Refitting**, page **12A-1**) .
- ❑ Fit:
  - the engine wiring,
  - the Protection and Switching Unit.
- ❑ Refit:
  - the Protection and Switching Unit connectors,
  - the Protection and Switching Unit,
  - the Protection and Switching Unit cover.
- ❑ Clip on the battery wiring channel.
- ❑ Position the battery cables.
- ❑ Torque tighten the **battery wiring nuts on the offset positive terminal (8 N.m)**.
- ❑ Clip the offset positive terminal wiring onto the offset positive terminal.
- ❑ Connect the connectors to the offset positive terminal.
- ❑ Refit:
  - the front panel,
  - the front end panel bolts,
  - the front end panel clips.
- ❑ Clip the wiring of the right-hand headlight on the front end panel.

HEADLIGHT WASHERS WITH BLADE

- ❑ Refit the bolt between the windscreen washer reservoir and the front end panel.

- ❑ Connect the pressure switch connector to the condenser.
- ❑ Remove the blanking plugs.
- ❑ Lubricate the new seals with the recommended air conditioning oil to make fitting easier (see **Air conditioning: Parts and consumables for the repair work**) (62A, Air conditioning).
- ❑ Fit:
  - a new seal on the « condenser - expansion valve » connecting pipe,
  - a new seal on the « compressor - condenser » connecting pipe.
- ❑ Connect:
  - the « condenser - expansion valve» connecting pipe on the condenser,
  - the « compressor - condenser » connecting pipe on the condenser.
- ❑ Refit:
  - the « condenser - expansion valve» connecting pipe bracket bolt,
  - the « compressor - condenser » connecting pipe bracket bolt.
- ❑ Torque tighten the **connecting pipe bolts on the condenser (8 N.m)**.
- ❑ Connect:
  - the top cooling hose on the cooling radiator,
  - the expansion bottle degassing hose on the cooling radiator,
  - the bottom cooling hose on the cooling radiator.
- ❑ Using the **(Mot. 1448)**, fit:
  - the top cooling hose clip on the cooling radiator,
  - the expansion bottle degassing hose clip on the cooling radiator,
  - the bottom cooling hose clip on the cooling radiator.
- ❑ Fit the cooling fan assembly wiring.
- ❑ Clip the cooling fan assembly wiring.

K4M

❑ Connect:

- the cooling fan assembly connector,
- the cooling fan assembly resistor connector,
- the relay unit on the front end panel.

❑ Refit:

- the engine wiring channel on the cooling fan assembly,
- the bonnet catch (see **Bonnet latch: Removal - Refitting**) (52A, Non-side opening element mechanisms),
- the radiator mounting cross member (see **Radiator support cross member: Removal - Refitting**) (31A, Front axle components),
- the front impact cross member (see **Front impact cross member: Removal - Refitting**) (41A, Front lower structure),
- the audible warning (see **Horn: Removal - Refitting**) (82B, Horn),
- the front bumper supports (see **Front bumper support: Removal - Refitting**) (42A, Front upper structure),
- the headlights (see **Front headlight: Removal - Refitting**) (80B, Headlights),
- the air deflectors,
- the front left-hand wheel driveshaft (see **Front left-hand wheel driveshaft: Removal - Refitting**) (29A, Driveshafts),
- the front right-hand wheel driveshaft (see **Front right-hand wheel driveshaft: Removal - Refitting**) (29A, Driveshafts),
- the lower engine tie-bar (see **19D**, **Engine mounting**, **Lower engine tie-bar: Removal - Refitting**, page **19D-33**) .

K4M, and JH3

❑ Connect the reverse gear switch connector.

❑ Refit:

- the front bumper (see **Front bumper: Removal - Refitting**) (55A, Exterior protection),
- the engine undertray,
- the front section of the front wheel arch liners (see **Front wheel arch liner: Removal - Refitting**) (55A, Exterior protection),
- the front wheels (see **Wheel: Removal - Refitting**) (35A, Wheels and tyres),
- the breather pipe on the gearbox.

❑ Refit the hydraulic clutch pipe (see **Clutch circuit: Removal - Refitting**) (37A, Mechanical component controls).

❑ Remove the tool **(Ms. 583)** between the brake fluid reservoir and the clutch master cylinder.

❑ Bleed the clutch (see **Clutch circuit: Bleeding**) (37A, Mechanical component controls).

❑ Clip on the gearbox control cables.

❑ Adjust the mechanical gearbox control cables (see **Mechanical gear control cable: Adjustment**) (37A, Mechanical component controls).

❑ Remove the blanking plugs on the fuel supply pipe.

❑ Connect:

- the fuel supply pipe to the injector rail,
- the fuel vapour rebreathing pipe on the throttle valve.

❑ Clip the fuel vapour rebreathing pipe onto the throttle valve.

❑ Connect the vacuum pipe to the throttle valve.

❑ Refit the air outlet pipe onto the air filter unit.

❑ Connect the air outlet pipe of the air filter unit.

❑ Torque tighten the **air inlet pipe clip of the throttle valve (6 N.m)**.

❑ Refit:

- the battery tray (see **Battery tray: Removal - Refitting**) (80A, Battery),
- the battery (see **Battery: Removal - Refitting**) (80A, Battery).

❑ Refill:

- the cooling circuit (see **19A**, **Cooling**, **Cooling circuit: Draining - Refilling**, page **19A-17**) ,
- the manual gearbox (see **Manual gearbox oil: Draining - Refilling**) (21A, Manual gearbox),
- the refrigerant circuit using a **refrigerant charging station** (see **Coolant circuit Draining - Refilling**) (62A, Air conditioning),
- the engine oil if necessary (see **10A**, **Engine and cylinder block assembly**, **Engine oil: Draining - Refilling**, page **10A-40**) .

❑ Refit the engine cover.

K9K, and 830 or 832

Essential special tooling	
Mot. 1448	Long nose pliers for hose clips.
Mot. 1202-02	Pliers for small hose clips.
Ms. 583	Hose clamp pliers.
Mot. 1390	Support for removing/refitting the engine - gearbox assembly.
Mot. 1453	Multiple-adjusting engine mounting support with retaining straps.
Mot. 1453-01	Additional winder nut on engine lift support Mot. 1453.

Essential equipment
refrigerant charging station
safety strap(s)

Tightening torques ▽	
bolt of the left-hand suspended engine mounting support on the gearbox	**62 N.m**
bolts of the "rubber pad - cover" assembly of the right-hand suspended engine mounting on the cylinder head	**62 N.m**
bolts of the "rubber pad - cover" assembly of the right-hand suspended engine mounting on the body	**62 N.m**
upper engine tie-bar bolt on the engine	**115 N.m**
upper engine tie-bar bolt on the body	**105 N.m**
bolt of the "dehydrator reservoir - compressor" connecting pipe on the compressor	**8 N.m**
earth cable nut on the body	**8 N.m**

Tightening torques ▽	
connecting pipe bolts on the condenser	**8 N.m**
air filter unit air outlet pipe clip on the turbo-charger	**5.5 N.m**
lower engine tie-bar bolt on the subframe	**180 N.m**
lower engine tie-bar bolt on the lower engine tie-bar support	**180 N.m**

IMPORTANT
Wear leaktight gloves (Nitrile type) for this operation.

WARNING
To prevent impurities from entering the circuit, place protective plugs on all fuel circuit components exposed to the open air.

WARNING
To avoid any corrosion or damage, protect the areas on which fuel is likely to run.

WARNING
Keep the pipe unions away from contaminated areas.

WARNING
To prevent moisture from entering the system, place plugs on the cold loop components which are open to the air.

WARNING
To avoid any leaks, check that the pipe surface is sound before positioning the new seal. The surface must be clean and scratch free.

K9K, and 830 or 832

WARNING
In order to avoid any refrigerant leaks, do not damage (deform, twist, etc.) the pipe.

REMOVAL

I - REMOVAL PREPARATION OPERATION

❏ Position the vehicle on a two-post lift (see **Vehicle: Towing and lifting**) (02A, Lifting equipment).

❏ Remove:

- the engine cover,
- the battery (see **Battery: Removal - Refitting**) (80A, Battery),
- the front wheels (see **Wheel: Removal - Refitting**) (35A, Wheels and tyres),
- the front section of the front wheel arch liners (see **Front wheel arch liner: Removal - Refitting**) (55A, Exterior protection),
- the front bumper (see **Front bumper: Removal - Refitting**) (55A, Exterior protection),
- the engine undertray bolts,
- the engine undertray.

IMPORTANT
To avoid all risk of damage to the systems, apply the safety and cleanliness instructions and operation recommendations before carrying out any repair (see **Air conditioning: Precautions for repair**) .

❏ Drain:

- the refrigerant circuit using a **refrigerant charging station** (see **Coolant circuit Draining - Refilling**) (62A, Air conditioning),
- the manual gearbox (see **Manual gearbox oil: Draining - Refilling**) (21A, Manual gearbox).
- the cooling system (see **19A**, **Cooling**, **Cooling circuit: Draining - Refilling**, page **19A-17**) ,
- the engine oil (if necessary) (see **10A**, **Engine and cylinder block assembly**, **Engine oil: Draining - Refilling**, page **10A-40**) .

❏ Remove:

- the front right-hand wheel driveshaft (see **Front right-hand wheel driveshaft: Removal - Refitting**) (29A, Driveshafts),
- the front left-hand wheel driveshaft (see **Front left-hand wheel driveshaft: Removal - Refitting**) (29A, Driveshafts),
- the differential output seals (see **Differential output seal: Removal - Refitting**) (21A, Manual gearbox).

K9K, and 832

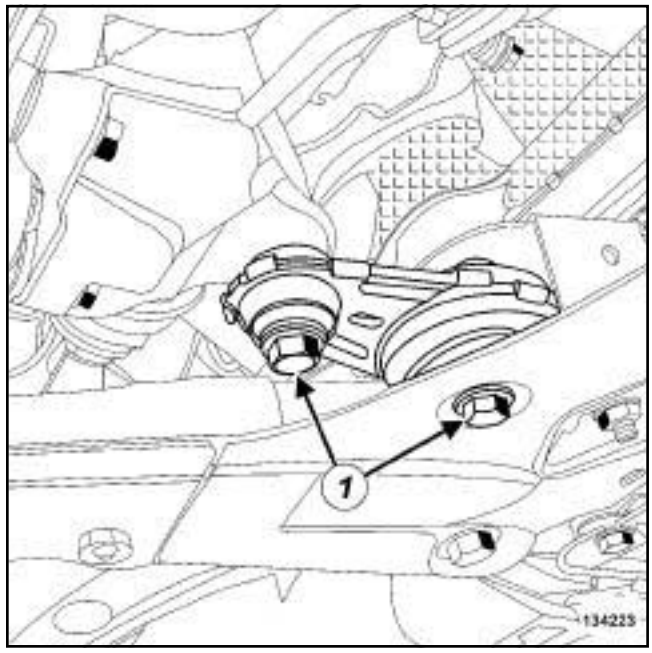

134223

❏ Remove:

- the bolts (**1**) from the lower engine tie-bar,
- the lower engine tie-bar.

K9K, and 830

❏ Remove the lower engine tie-bar (see **19D**, **Engine mounting**, **Lower engine tie-bar: Removal - Refitting**, page **19D-33**) .

K9K, and 830 or 832

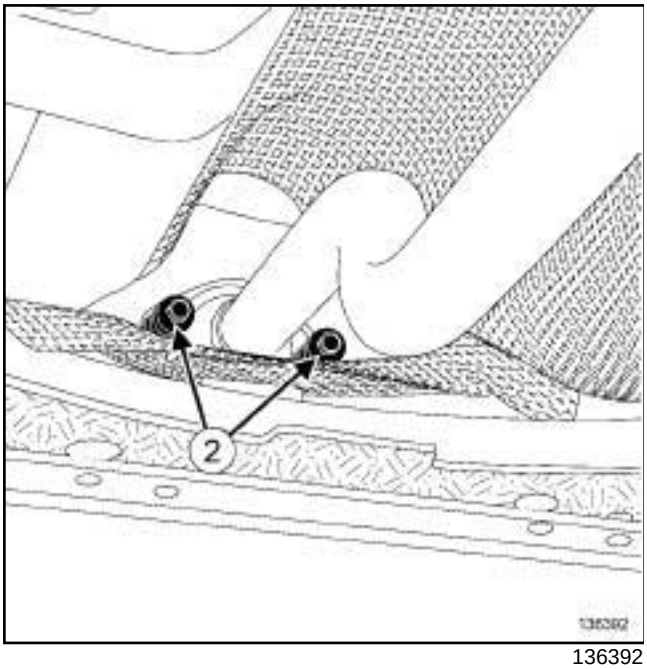

136392

- ❑ Remove the bolts (**2**) from the exhaust bracket.
- ❑ Move the exhaust bracket away from the catalytic converter.
- ❑ Disconnect the oil vapour rebreathing pipe union from the air filter unit air outlet pipe.

K9K, and 832

- ❑ Disconnect the oil vapour rebreathing pipe from the rocker cover.
- ❑ Remove the oil vapour rebreathing pipe.

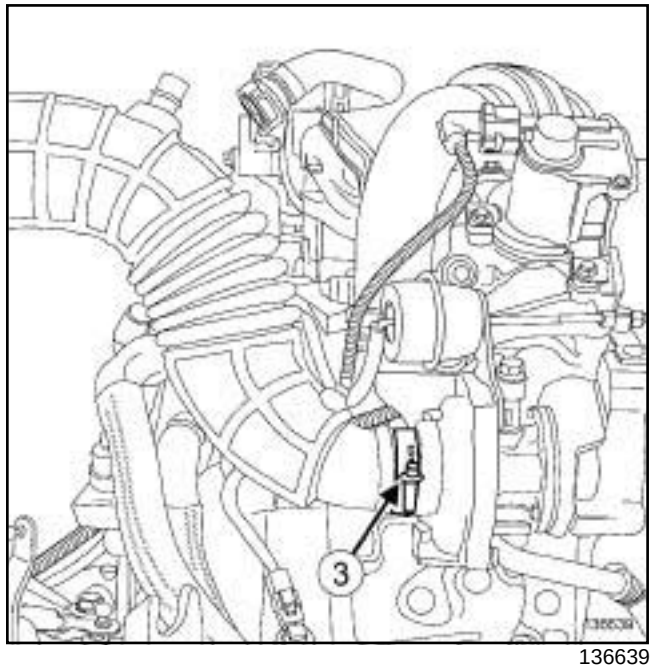

136639

- ❑ Undo the air filter unit air outlet pipe clip (**3**) from the turbocharger.
- ❑ Disconnect the air filter unit air outlet pipe from the turbocharger.
- ❑ Remove:
  - the battery tray (see **Battery tray: Removal - Refitting**) (80A, Battery),
  - the air filter unit (see **12A**, **Fuel mixture**, **Air filter unit: Removal - Refitting**, page **12A-4**) ,
  - the air outlet pipe to the air filter unit,
  - the turbocharger air outlet pipe (see **12B**, **Turbocharging**, **Intercooler air inlet pipe: Removal - Refitting**, page **12B-41**) ,
  - the intercooler air outlet pipe (see **12B**, **Turbocharging**, **Intercooler air outlet pipe: Removal - Refitting**, page **12B-56**) ,
  - the headlights (see **Front headlight: Removal - Refitting**) (80B, Headlights),
  - the front bumper mountings (see **Front bumper support: Removal - Refitting**) (42A, Front upper structure),
  - the top air deflector of the cooling radiator,
  - the side air deflectors of the cooling radiator,
  - the audible warning (see **Horn: Removal - Refitting**) (82B, Horn),
  - the front impact cross member (see **Front impact cross member: Removal - Refitting**) (41A, Front lower structure).

K9K, and 830 or 832

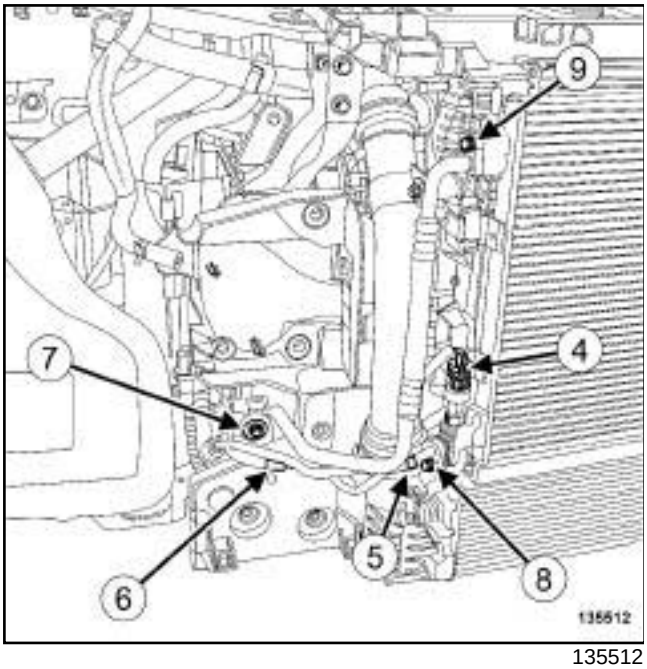

135512

❑ Disconnect the connector (**4**) from the refrigerant circuit pressure sensor.

❑ Unclip:

- the refrigerant circuit pressure sensor wiring from the "condenser - evaporator" connecting pipe at (**5**) ,
- the refrigerant circuit pressure sensor wiring from the front end panel at (**6**) .

❑ Remove:

- the bolt (**7**) of the "compressor - condenser" connecting pipe bracket from the body,
- the bolt (**8**) of the « condenser - expansion valve » connecting pipe bracket,
- the bolt (**9**) for the « compressor - condenser » connecting pipe bracket.

❑ Disconnect:

- the « condenser - expansion valve » connecting pipe from the condenser,
- the « compressor - condenser » connecting pipe on the condenser.

❑ Remove:

- the seal of the « condenser - expansion valve » connecting pipe,
- the seal of the « compressor - condenser » connecting pipe.

❑ Insert the blanking plugs.

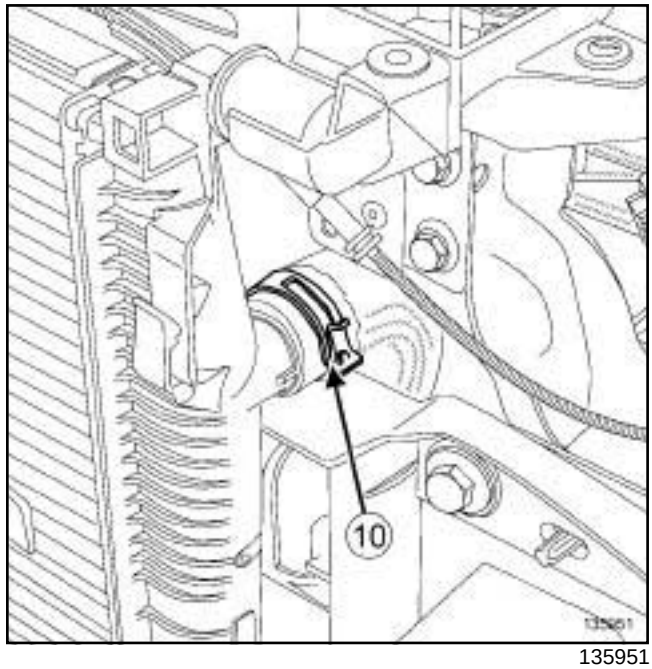

135951

❑ Separate the cooling radiator bottom cooling hose clip (**10**) on the cooling radiator using the tool **(Mot. 1448)**.

❑ Disconnect the cooling radiator bottom cooling hose from the cooling radiator.

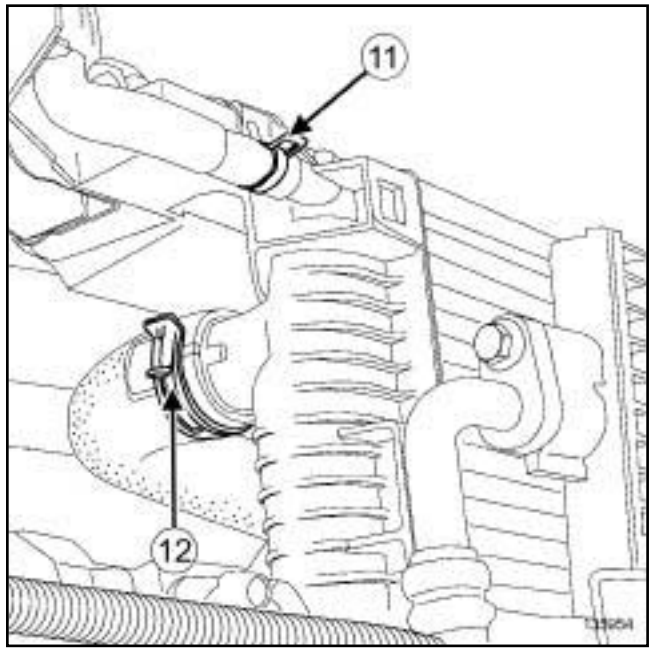

135954

❑ Separate from the cooling radiator:

- the expansion bottle top cooling hose clip **(Mot. 1202-02)** using the tool (**11**) ,
- the top cooling hose clip (**12**) using the tool **(Mot. 1448)**.

K9K, and 830 or 832

❑ Disconnect from the cooling radiator:

- the expansion bottle top cooling hose,
- the cooling radiator top cooling hose.

❑ Remove the bonnet catch (see **Bonnet latch: Removal - Refitting**) (52A, Non-side opening element mechanisms).

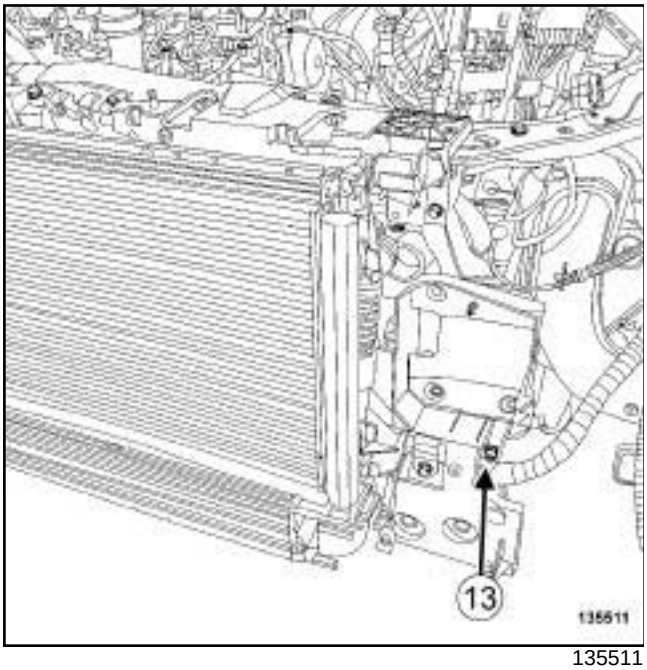

135511

❑ Unclip from the front end panel:

- the wiring of the front impact cross member at (**13**) ,
- the expansion bottle top cooling hose.

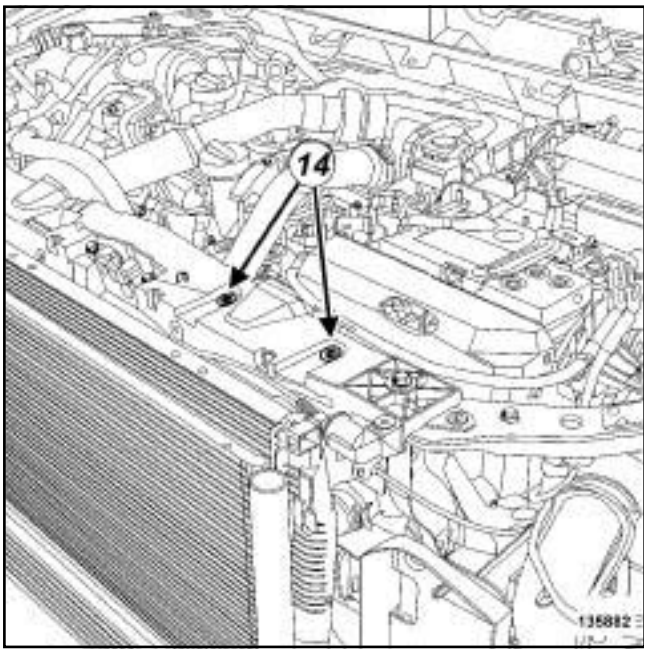

135882

❑ Remove the bolts (**14**) of the fan assembly wiring channel from the front end panel.

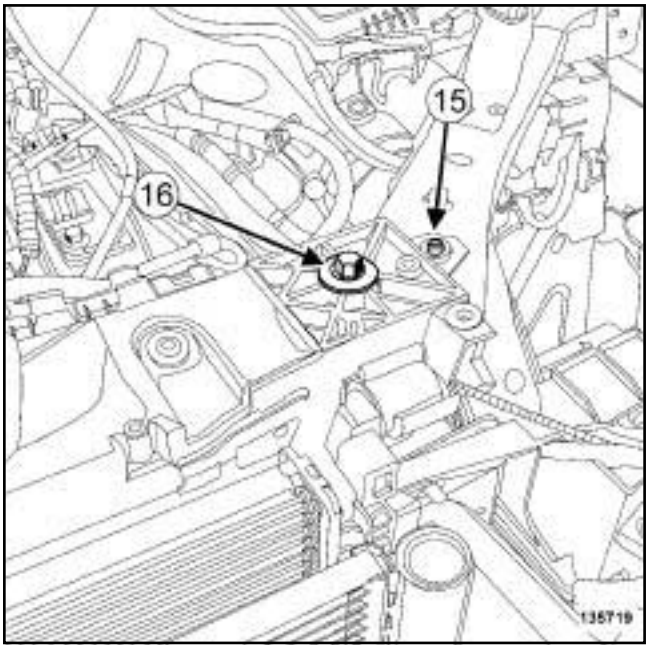

135719

❑ Remove from the front end panel:

- the clips (**15**) ,
- the upper bolts (**16**) .

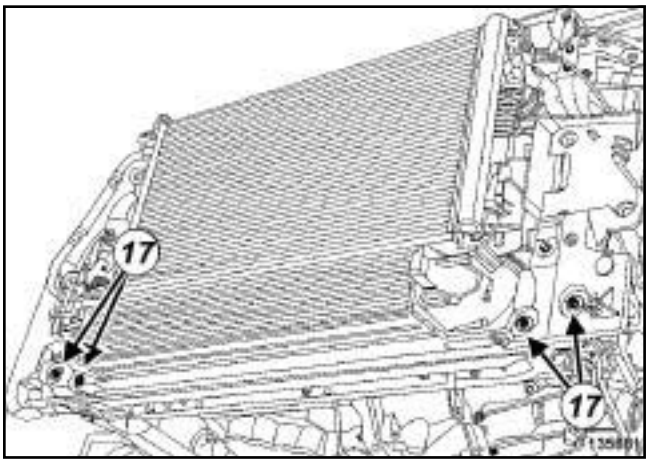

135881

❑ Remove the lower bolts (**17**) from the front end panel.

K9K, and 830 or 832

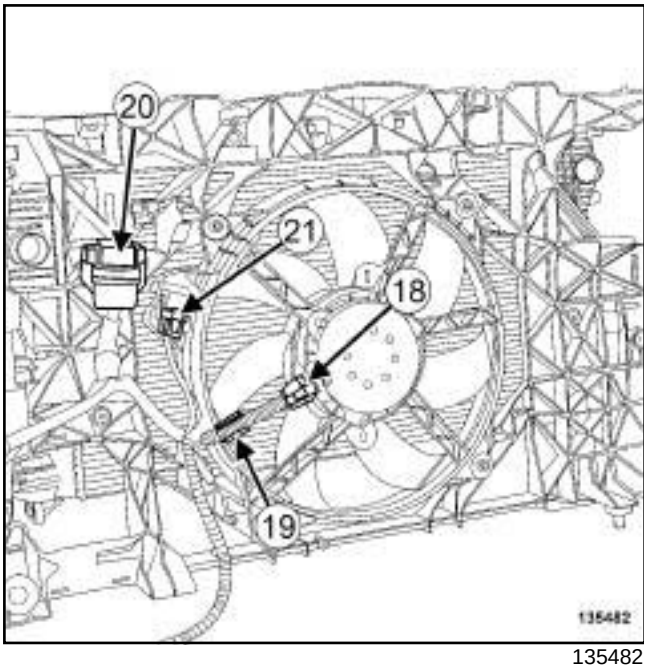

135482

- ❑ Disconnect:
  - the fan assembly connector (**18**) ,
  - the fan assembly resistor connector (**21**) .
- ❑ Unclip:
  - the fan assembly wiring from the fan assembly at (**19**) ,
  - the relay unit (**20**) from the front end panel.
- ❑ Move the fan assembly wiring away from the front end panel.

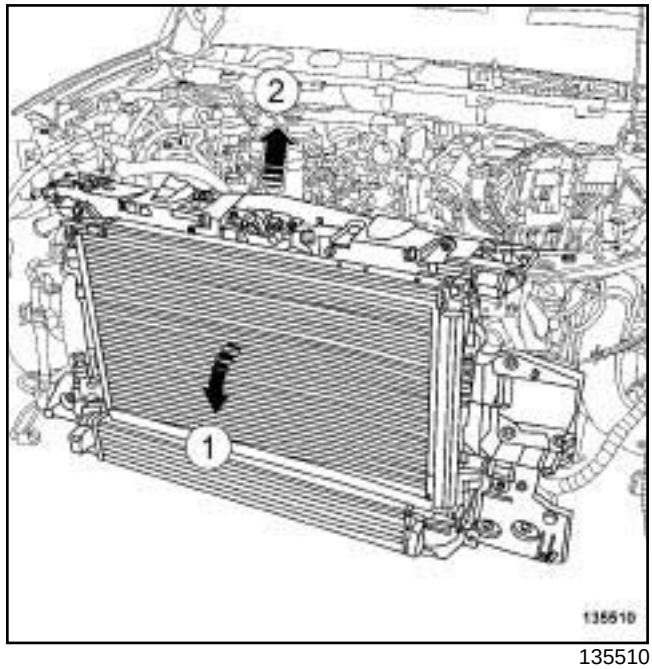

135510

- ❑ Tilt the front end panel towards the vehicle front (**1**) .
- ❑ Remove the front end panel by pulling it upwards (**2**) .

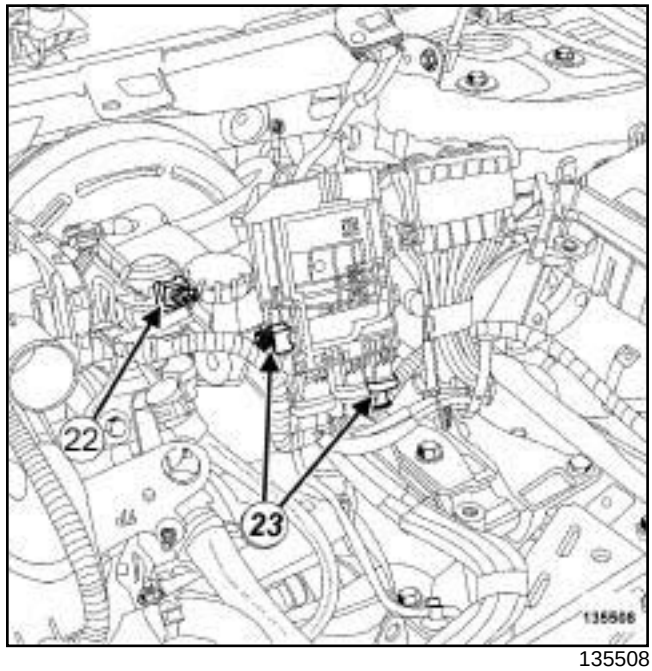

135508

- ❑ Disconnect the connector (**22**) from the turbocharging pressure regulation solenoid valve.
- ❑ Disconnect the connectors (**23**) from the battery disconnection unit.
- ❑ Unclip the battery disconnection unit wiring from the offset positive terminal.

K9K, and 830 or 832

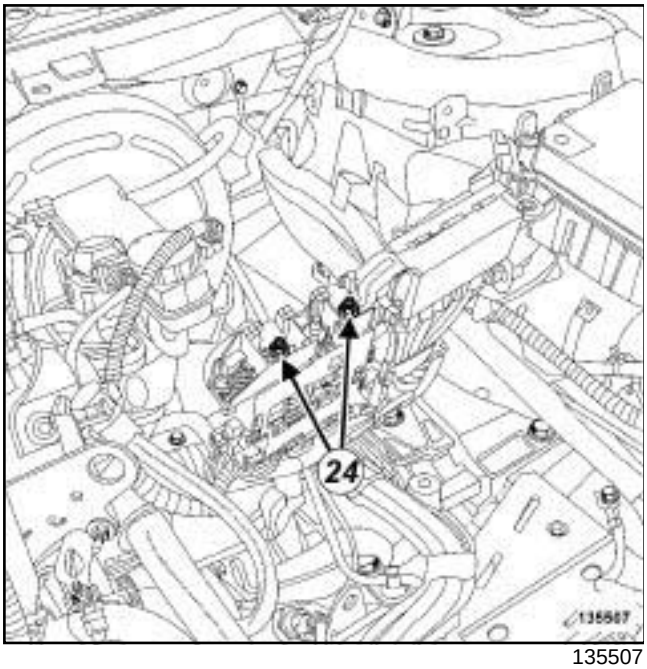

135507

❑ Remove the power cable nuts (**24**) from the battery disconnection unit.

❑ Move aside the power cables.

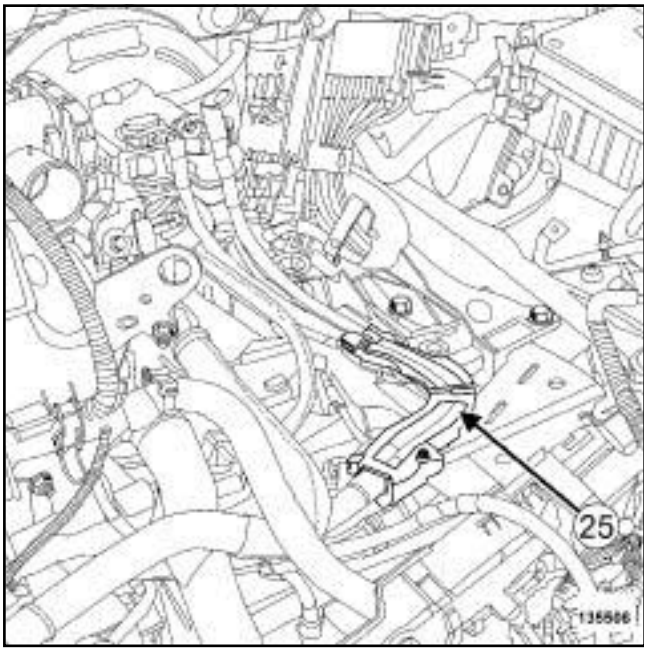

135506

❑ Unclip the power wiring channel (**25**) from the left-hand suspended engine mounting.

❑ Remove the air resonator (see **12A**, **Fuel mixture**, **Air resonator: Removal - Refitting**, page **12A-1**) .

K9K, and 830

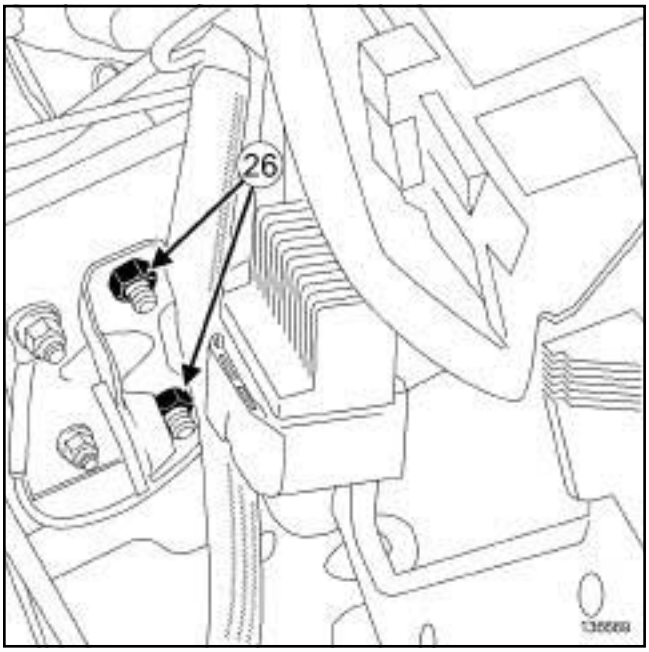

136669

❑ Remove the air resonator support nuts (**26**) .

❑ Move aside the air resonator support.

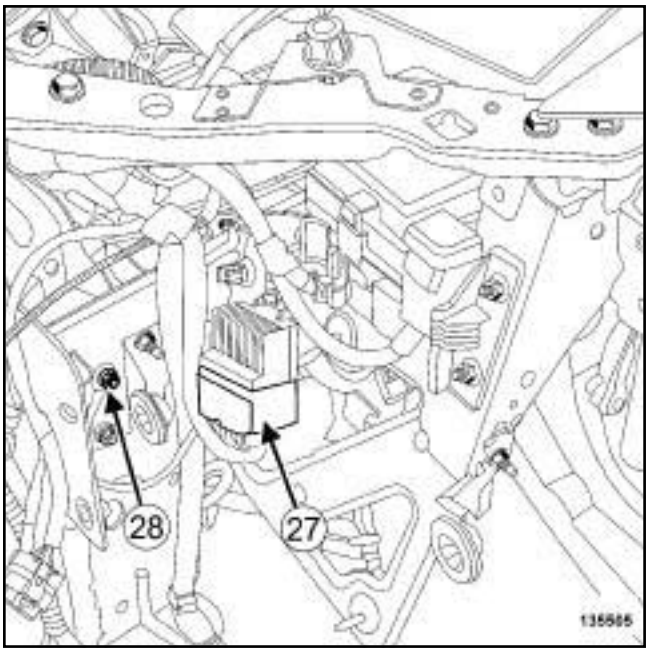

135505

❑ Disconnect the pre-postheating unit connector (**27**) .

❑ Remove the earth cable nut (**28**) from the body.

❑ Move the earth cable away from the body.

K9K, and 830 or 832

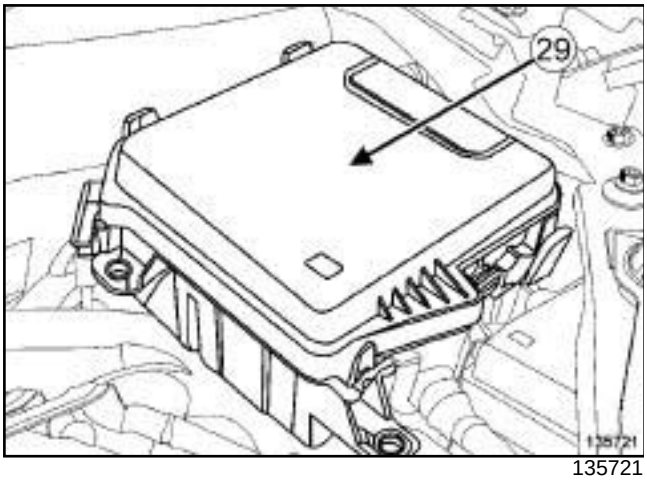

135721

❑ Remove the Protection and Switching Unit cover (**29**) .

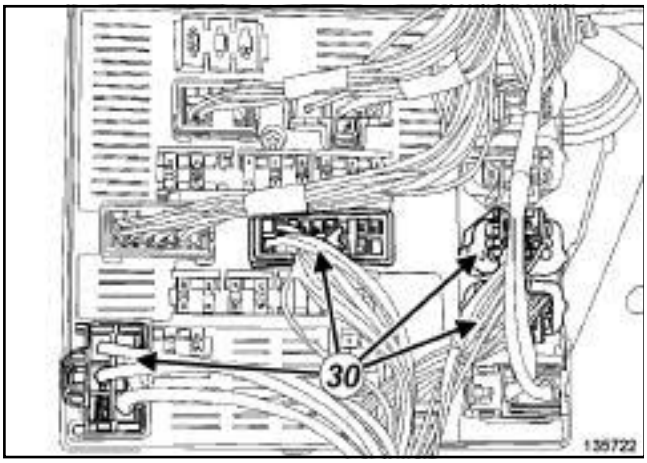

135722

❑ Disconnect the connectors (**30**) from the Protection and Switching Unit.

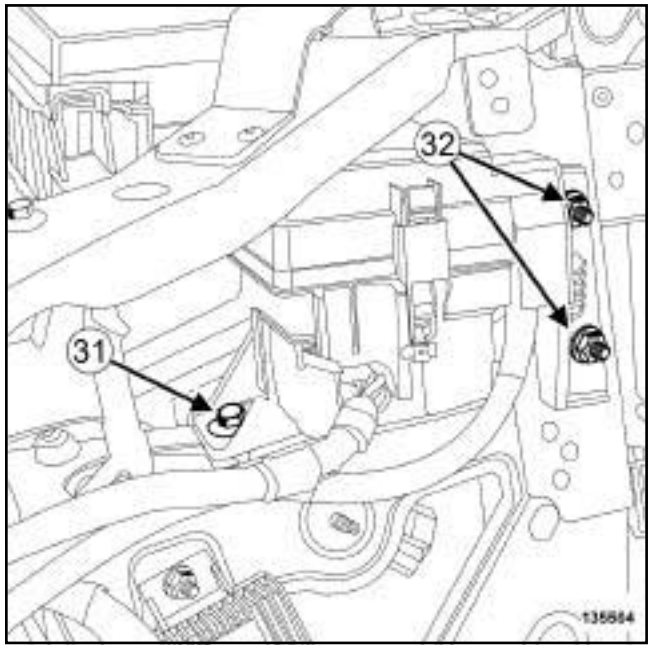

135504

❑ Remove:

- the bolt (**31**) from the engine fuse box,
- the nuts (**32**) from the engine fuse box.

❑ Move aside the engine fuse box.

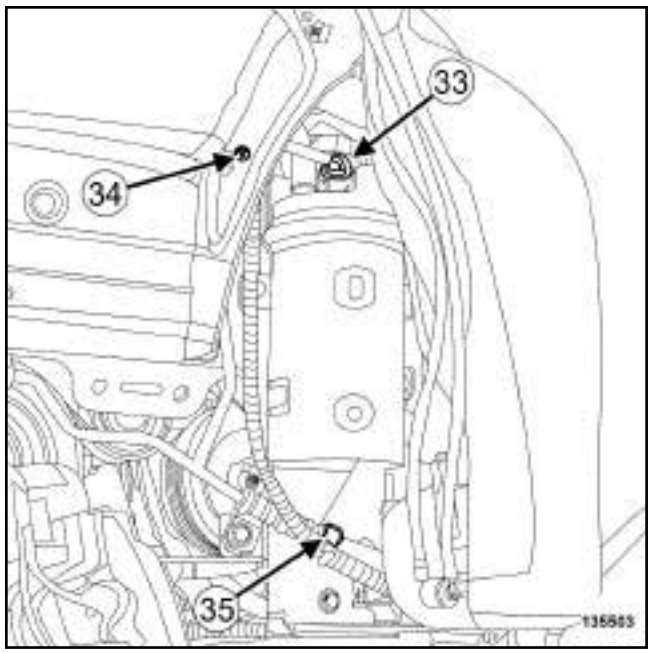

135503

❑ Disconnect the diesel heater connector (**33**) .

❑ Unclip:

- the diesel heater wiring from the body at (**34**) ,
- the diesel heater wiring from the "condenser - evaporator" connecting pipe at (**35**) ,

K9K, and 830 or 832

- the diesel heater wiring from the radiator mounting cross member.

❏ Move aside the diesel heater wiring.

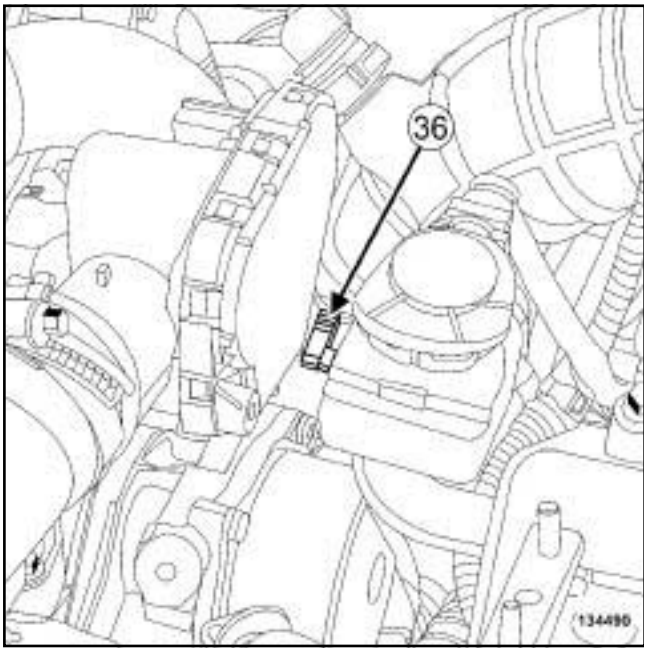

134490

❏ Disconnect the brake servo pipe union (**36**) from the vacuum pump.

K9K, and 832

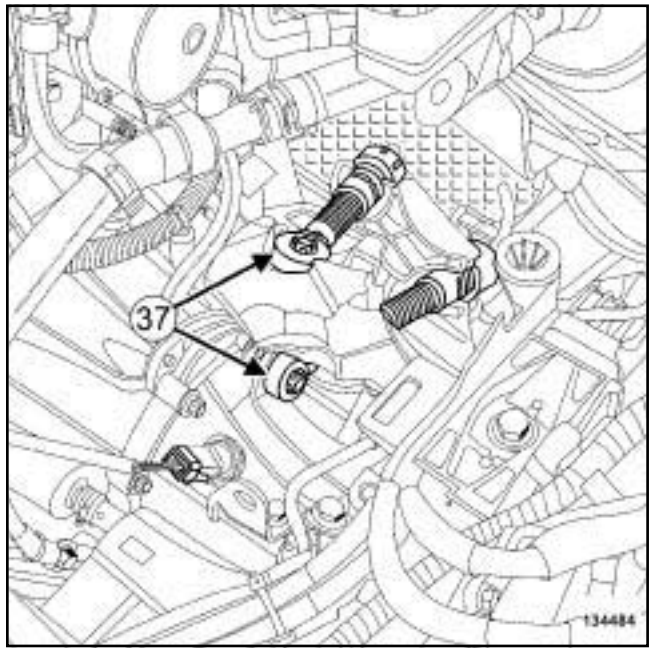

134484

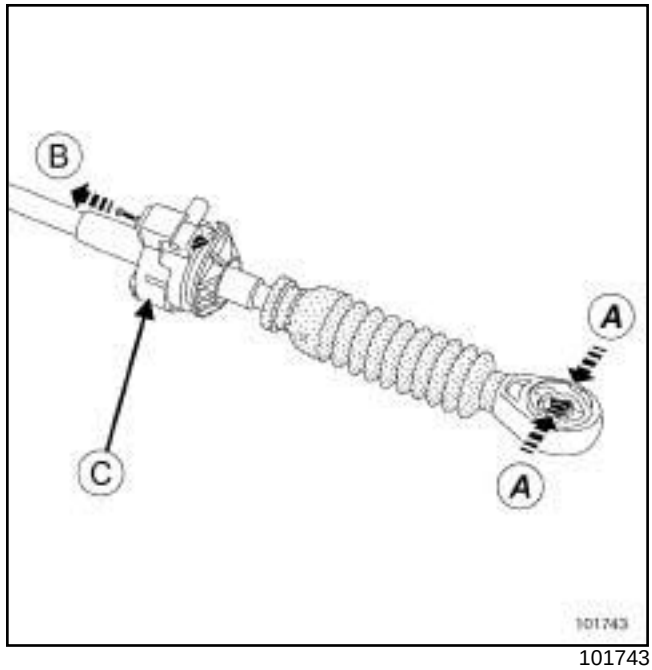

101743

❏ Unclip the manual gear selector cables (**37**) by:

- pinching the manual gear selector (**A**) ,
- pulling the manual gear selector pin (**B**) ,
- lifting the manual gear selector (**C**) from the manual gear selector mounting.

❏ Move aside the manual gear selector cables.

K9K, and 830 or 832

K9K, and 830

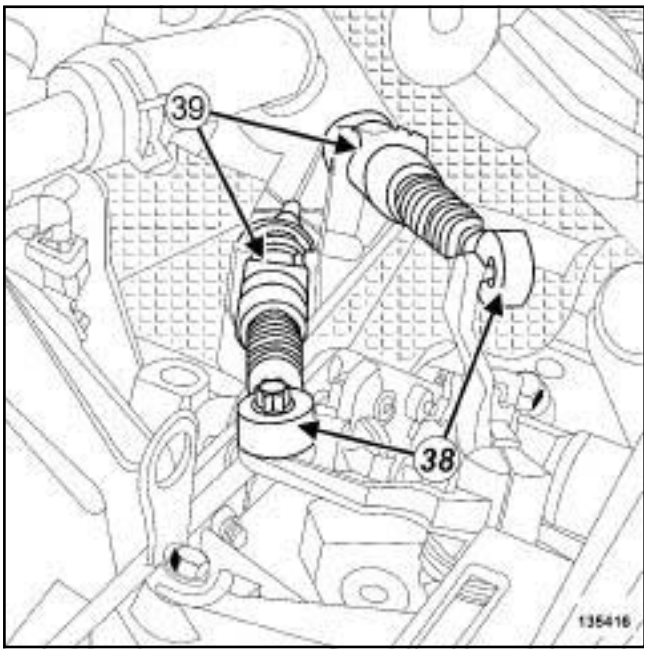

135416

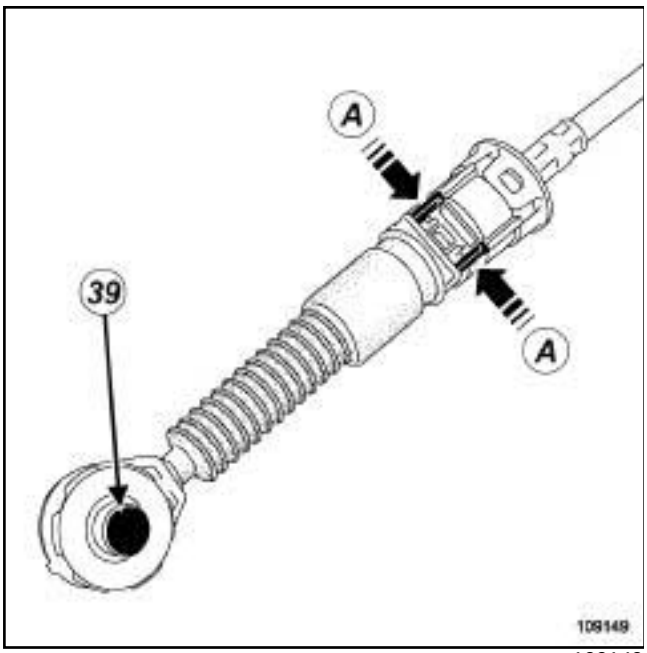

109149

❑ Unclip the manual gear selector cables by:

- unclipping the anchoring ball joints (**38**) of the manual gear selector,
- pinching the manual gear selector at (**A**) ,
- lifting the manual gear selector (**39**) from the manual gear selector mounting.

❑ Move aside the manual gear selector cables.

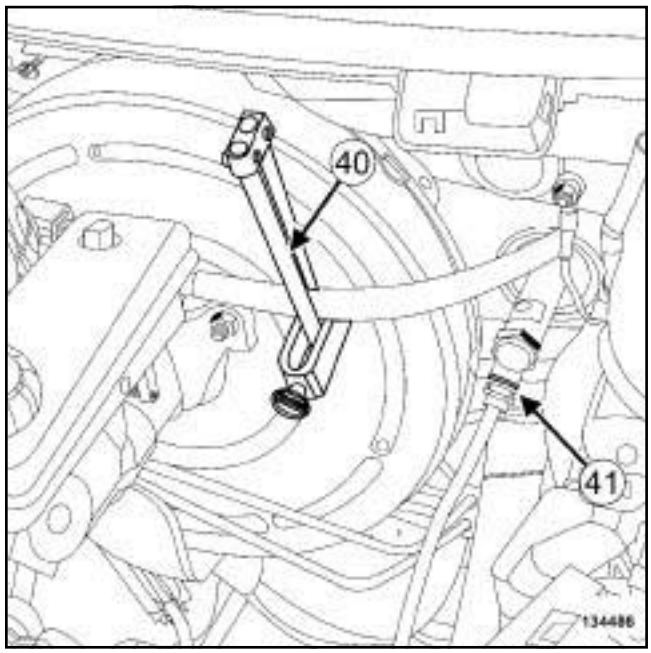

134486

❑ Fit the tool **(Ms. 583)** (**40**) onto the clutch master cylinder supply pipe.

❑ Disconnect the clutch pipe from the clutch master cylinder by pulling on the clip (**41**) .

❑ Fit an appropriate blanking plug:

- on the opening of the clutch pipe,
- on the opening of the clutch master cylinder.

K9K, and 830 or 832

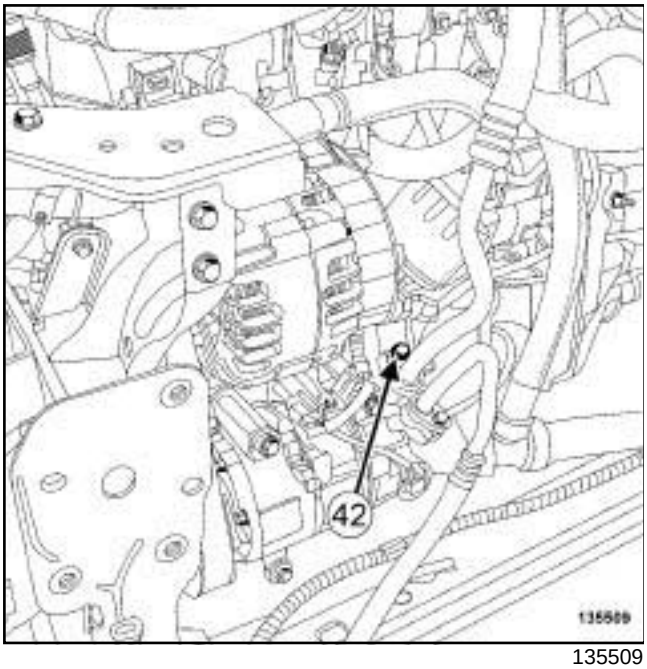

135509

- ❑ Remove the bolt (**42**) of the "dehydrator reservoir - compressor" connecting pipe from the compressor.
- ❑ Uncouple the "dehydrator reservoir - compressor" connecting pipe from the compressor.
- ❑ Remove the seal of the "dehydrator reservoir - compressor" connecting pipe on the compressor side.
- ❑ Fit an appropriate blanking plug:
  - on the compressor opening,
  - on the opening of the "dehydrator reservoir - compressor" connecting pipe.

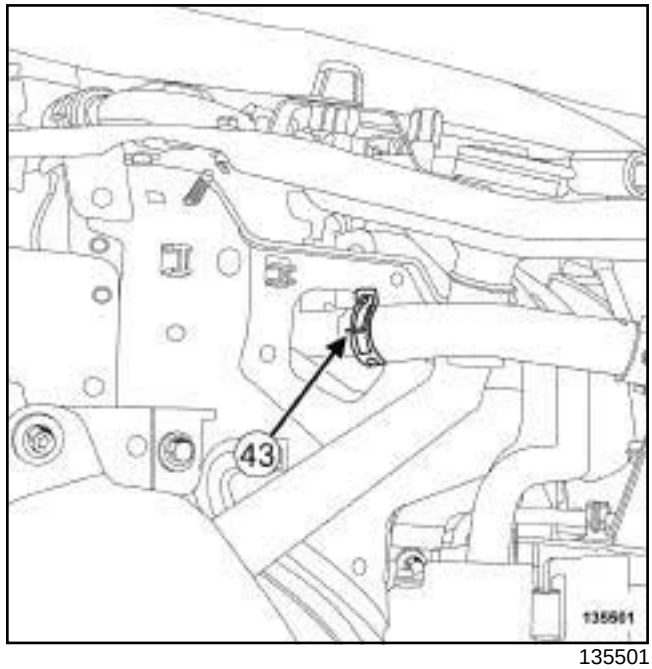

135501

- ❑ Separate the expansion bottle bottom cooling hose clip (**43**) on the expansion bottle.
- ❑ Disconnect the expansion bottle bottom cooling hose from the expansion bottle.

K9K, and 832

- ❑ Unclip the expansion bottle bottom cooling hose from the high pressure pump protector.

K9K, and 830 or 832

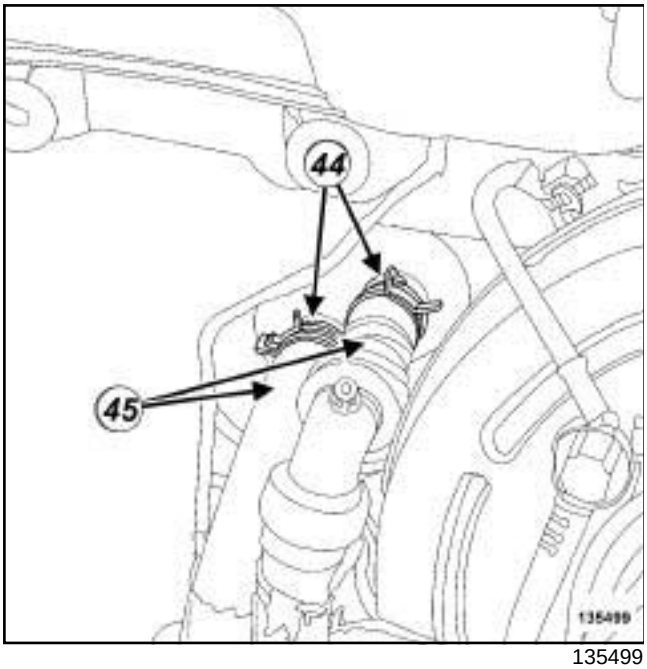

135499

- Separate the clip (**44**) of each heater matrix cooling hose on the heater matrix (**45**) .
- Disconnect the heater matrix cooling hoses (**45**) from the heater matrix.

K9K, and 832

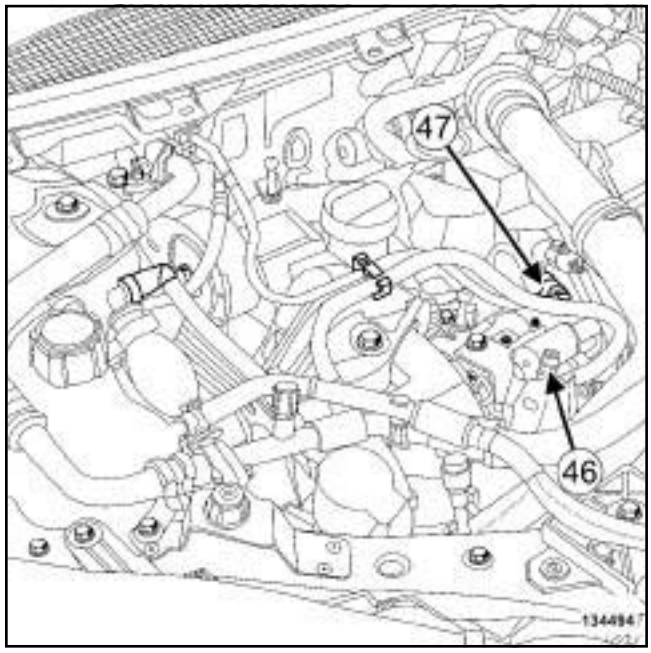

134494

- Unclip the fuel supply pipe from the "rubber pad - cover" assembly of the right-hand suspended engine mounting.
- Disconnect the fuel supply pipe (**46**) from the high pressure pump.
- Fit an appropriate blanking plug:
  - on the fuel supply pipe union,
  - on the high pressure pump opening.
- Unclip the diesel return pipe from the "rubber pad - cover" assembly of the right-hand suspended engine mounting.
- Disconnect the diesel return pipe (**47**) from the diesel injector return rail.
- Fit an appropriate blanking plug:
  - on the diesel return pipe union,
  - on the opening of the fuel return rail.

K9K, and 830 or 832

K9K, and 830

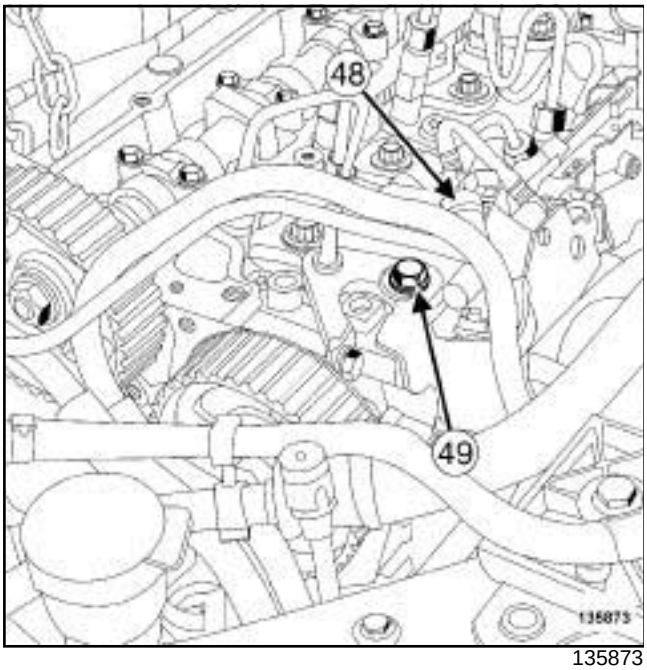

135873

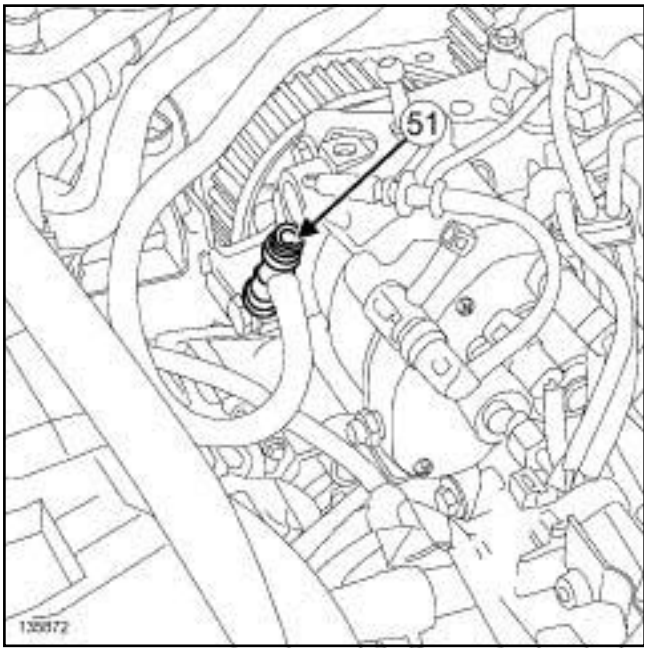

135872

❑ Unclip the fuel return union (**48**) of the high pressure pump from the high pressure pump protector.

❑ Remove:

- the bolt (**49**) of the high pressure pump protector,
- the high pressure pump protector.

❑ Unclip the fuel supply pipe from the "rubber pad - cover" assembly of the right-hand suspended engine mounting.

❑ Disconnect the fuel supply pipe (**50**) from the high pressure pump.

❑ Fit suitable blanking plugs on:

- on the fuel supply pipe union,
- on the high pressure pump opening.

❑ Unclip the diesel return pipe from the "rubber pad - cover" assembly of the right-hand suspended engine mounting.

❑ Disconnect the diesel return pipe (**48**) from the fuel return union of the high pressure pump.

❑ Fit an appropriate blanking plug:

- on the fuel return pipe union,
- on the opening of the diesel return pipe union of the high pressure pump.

❑ Remove the radiator mounting cross member (see **Radiator support cross member: Removal - Refitting**) (31A, Front axle components).

II - OPERATION FOR REMOVAL OF PART CONCERNED

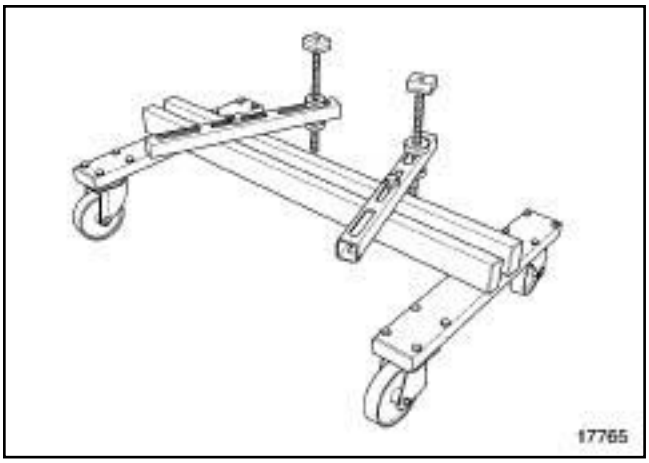

17765

❑ Position the tool **(Mot. 1390)** under the "engine - gearbox" assembly.

K9K, and 830 or 832

K9K, and 832

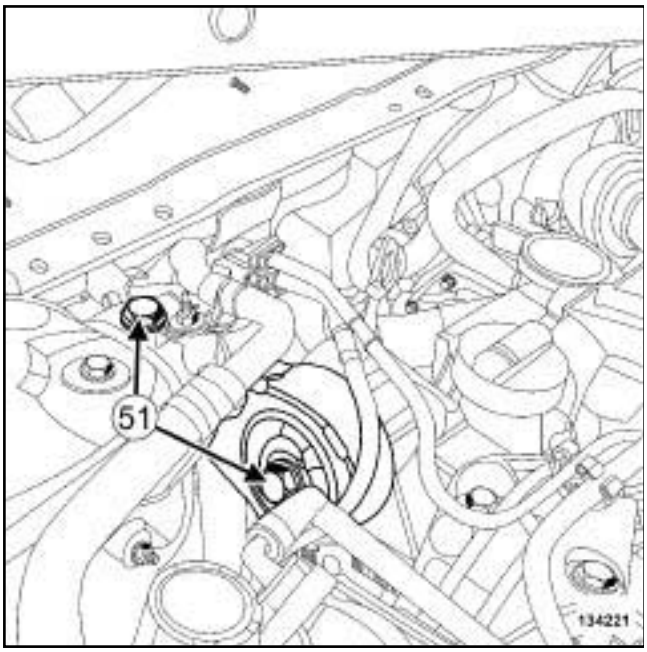

134221

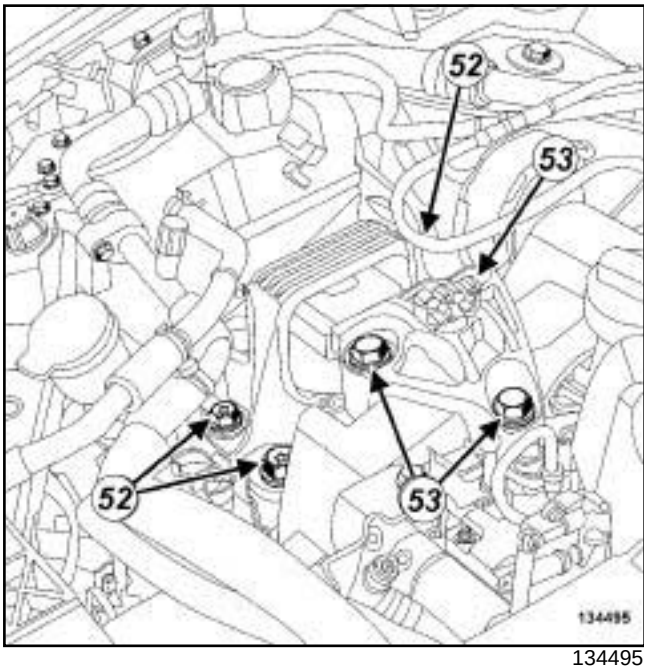

134495

❑ Remove:

- the upper engine tie-bar bolts (**51**) ,
- the upper engine tie-bar.

❑ Remove the bolts (**52**) of the "rubber pad - cover" assembly of the right-hand suspended engine mounting from the body.

K9K, and 830

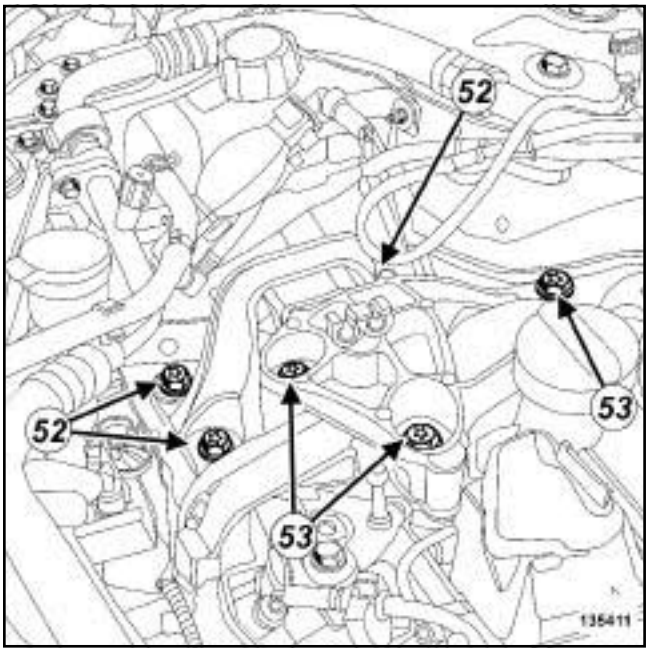

135411

❑ Remove the bolts (**52**) of the "rubber pad - cover" assembly of the right-hand suspended engine mounting from the body.

❑ Raise the engine slightly using the tool **(Mot. 1453)** equipped with the tool **(Mot. 1453-01)** until the "rubber pad - cover" assembly of the right-hand suspended engine mounting detaches from the body.

❑ Remove:

- the bolts (**53**) of the "rubber pad - cover" assembly of the right-hand suspended engine mounting from the cylinder head,
- the "rubber pad - cover" assembly of the right-hand suspended engine mounting.

K9K, and 830 or 832

K9K, and 832

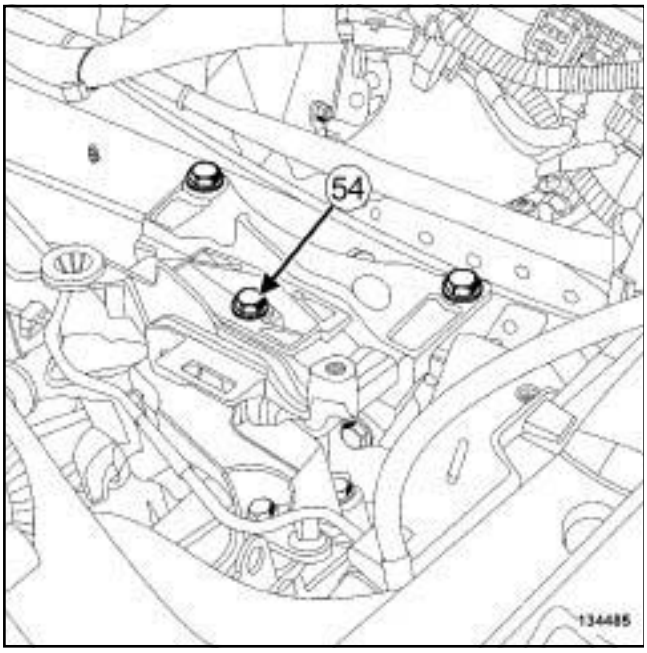

134485

❑ Remove the bolt (**54**) from the left-hand suspended engine mounting support on the gearbox.

K9K, and 830

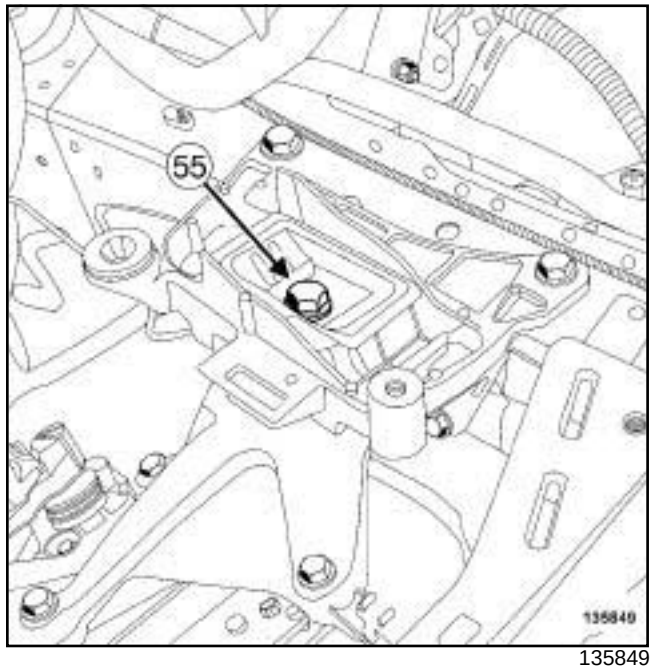

135849

❑ Remove the bolt (**55**) from the left-hand suspended engine mounting support on the gearbox.

❑ Remove the "engine - gearbox" assembly using the tool **(Mot. 1390)**.

❑ Strap the "engine - gearbox" assembly to the tool **(Mot. 1390)** using a **safety strap(s)**.

REFITTING

I - REFITTING PREPARATION OPERATION

❑ **parts always to be replaced: seal between catalytic converter and exhaust downpipe hose (10, 08,02,21)**.

❑ **parts always to be replaced: refrigerant pipe seal (30,02,02,52)**.

II - REFITTING OPERATION FOR PART CONCERNED

❑ Position the "engine - gearbox" assembly in the engine compartment.

❑ Torque tighten the **bolt of the left-hand suspended engine mounting support on the gearbox (62 N.m)**.

❑ Refit the "rubber pad - cover" assembly of the right-hand suspended engine mounting.

K9K, and 830 or 832

- ❑ Lower the engine using the **(Mot. 1453)** fitted with the **(Mot. 1453-01)** until the "rubber pad - cover" assembly of the right-hand suspended engine mounting touches the body.
- ❑ Refit the bolts of the "rubber pad - cover" assembly of the right-hand suspended engine mounting on the body.
- ❑ Tighten to torque:
  - the **bolts of the "rubber pad - cover" assembly of the right-hand suspended engine mounting on the cylinder head (62 N.m)**,
  - the **bolts of the "rubber pad - cover" assembly of the right-hand suspended engine mounting on the body (62 N.m)**.

K9K, and 832

- ❑ Refit the upper engine tie-bar.
- ❑ Tighten to torque:
  - the **upper engine tie-bar bolt on the engine (115 N.m)**,
  - the **upper engine tie-bar bolt on the body (105 N.m)**.

- ❑ Remove:
  - the **safety strap(s)** from the "engine - gearbox" assembly,
  - the **(Mot. 1390)** from under the "engine - gearbox" assembly.

III - FINAL OPERATION

- ❑ Refit the radiator mounting cross member (see **Radiator support cross member: Removal - Refitting**) (31A, Front axle components).

K9K, and 832

- ❑ Remove the blanking plug
  - from the opening of the diesel injector fuel return rail,
  - from the diesel return pipe union.
- ❑ Connect the diesel return pipe to the diesel injector fuel return rail.

K9K, and 830

- ❑ Remove the blanking plug
  - from the opening of the diesel return pipe union of the high pressure pump,
  - from the fuel return pipe union.
- ❑ Connect the fuel return pipe to the fuel return union of the high pressure pump.

- ❑ Clip the diesel return pipe on the "rubber pad - cover" assembly of the right-hand suspended engine mounting.
- ❑ Remove the blanking plug
  - from the opening of the high pressure pump,
  - from the fuel supply pipe union.
- ❑ Connect the fuel supply pipe to the high pressure pump.
- ❑ Clip the fuel supply pipe on the "rubber pad - cover" assembly of the right-hand suspended engine mounting.

K9K, and 830

- ❑ Refit the high pressure pump protector.
- ❑ Clip the fuel return union of the high pressure pump on the high pressure pump protector.

- ❑ Connect the heater matrix cooling hoses on the heater matrix.
- ❑ Fit the clip of each heater matrix cooling hose on the heater matrix.

K9K, and 832

- ❑ Clip the expansion bottle bottom cooling hose on the high pressure pump protector.

- ❑ Connect the expansion bottle bottom cooling hose on the expansion bottle.
- ❑ Fit the clip of the expansion bottle bottom cooling hose on the expansion bottle.
- ❑ Remove the blanking plug
  - from the compressor opening,

K9K, and 830 or 832

- from the opening of the "dehydrator reservoir - compressor" connecting pipe.

❏ Refit a new seal on the "dehydrator reservoir - compressor" connecting pipe on the compressor side.

❏ Lubricate the new seals with the recommended air conditioning oil to make fitting easier (see **Air conditioning: Parts and consumables for the repair work**) (62A, Air conditioning).

❏ Couple the "dehydrator reservoir - compressor" connecting pipe to the compressor.

❏ Torque tighten the **bolt of the "dehydrator reservoir - compressor" connecting pipe on the compressor (8 N.m)**.

❏ Remove the blanking plug

- from the opening of the clutch master cylinder,
- from the opening of the clutch pipe.

❏ Connect the hydraulic clutch pipe on the clutch master cylinder.

❏ Remove the tool **(Ms. 583)** from the clutch master cylinder supply pipe.

❏ Bleed the hydraulic clutch circuit (see **Clutch circuit: Bleeding**) (37A, Mechanical component controls).

❏ Fit the manual gear selector cables.

❏ Clip the manual gear selector cables:

- on the sheath stop,
- on the anchoring ball joints.

❏ Connect the brake servo pipe union to the vacuum pump.

❏ Position the diesel heater wiring.

❏ Clip:

- the diesel heater wiring on the radiator mounting cross member,
- the diesel heater wiring on the "condenser - evaporator" connecting pipe,
- the diesel heater wiring on the body.

❏ Connect the diesel heater connector.

❏ Fit the engine fuse box.

❏ Refit:

- the engine fuse box nuts,
- the engine fuse box bolt.

❏ Connect the Protection and Switching Unit connectors.

❏ Refit the Protection and Switching Unit cover.

❏ Fit the earth cable on the vehicle body.

❏ Torque tighten the **earth cable nut on the body (8 N.m)**.

❏ Connect the pre-postheating unit connector.

K9K, and 830

❏ Fit the air resonator support.

❏ Refit the nuts of the air resonator support.

❏ Refit the air resonator (see **12A**, **Fuel mixture**, **Air resonator: Removal - Refitting**, page **12A-1**) .

❏ Clip the power wiring channel on the left-hand suspended engine mounting.

❏ Position the power cables.

❏ Refit the power cable nuts on the battery disconnection unit.

❏ Clip the battery disconnection unit wiring onto the battery disconnection unit.

❏ Connect:

- the connectors of the battery disconnection unit,
- the turbocharging pressure regulation solenoid valve connector.

❏ Refit the front end panel.

❏ Fit the motor-driven fan assembly wiring.

❏ Clip:

- the relay unit on the front end panel,
- the fan assembly wiring on the fan assembly.

❏ Connect:

- the fan assembly connector,
- the fan assembly resistor connector.

❏ Refit:

- the lower bolts from the front end panel,
- the front end panel upper bolts,
- the front end panel clips,
- the bolts of the fan assembly wiring channel on the front end panel.

❏ Clip:

- the expansion bottle top cooling hose on the front end panel,
- the wiring of the front impact cross member on the front end panel.

K9K, and 830 or 832

- ❑ Refit the bonnet catch (see **Bonnet latch: Removal - Refitting**) (52A, Non-side opening element mechanisms).
- ❑ Connect:
  - the cooling radiator top cooling hose on the cooling radiator,
  - the expansion bottle top cooling hose on the cooling radiator.
- ❑ Fit the clip:
  - of the cooling radiator top cooling hose on the cooling radiator using the tool **(Mot. 1448)**,
  - of the expansion bottle top cooling hose using the tool **(Mot. 1202-02)**.
- ❑ Connect the cooling radiator bottom cooling hose to the cooling radiator.
- ❑ Fit the clip of the cooling radiator bottom cooling hose on the cooling radiator using the tool **(Mot. 1448)**.
- ❑ Remove the blanking plugs.
- ❑ Lubricate the new seals with the recommended air conditioning oil to make fitting easier (see **Air conditioning: Parts and consumables for the repair work**) (62A, Air conditioning).
- ❑ Fit:
  - a new seal on the « condenser - expansion valve » connecting pipe,
  - a new seal on the « compressor - condenser » connecting pipe.
- ❑ Connect:
  - the « condenser - expansion valve » connecting pipe on the condenser,
  - the « compressor - condenser » connecting pipe on the condenser.
- ❑ Refit:
  - the « condenser - expansion valve » connecting pipe bracket bolt,
  - the « compressor - condenser » connecting pipe bracket bolt.
- ❑ Torque tighten the **connecting pipe bolts on the condenser (8 N.m)**.
- ❑ Refit the bolt of the "compressor - condenser" connecting pipe bracket on the body.
- ❑ Clip the refrigerant circuit pressure sensor wiring:
  - on the front end panel,
  - on the "condenser - evaporator" connecting pipe.
- ❑ Connect the connector of the refrigerant circuit pressure sensor.
- ❑ Refit:
  - the frontal impact cross member (see **Front impact cross member: Removal - Refitting**) (41A, Front lower structure),
  - the audible warning (see **Horn: Removal - Refitting**) (82B, Horn),
  - the side air deflectors of the cooling radiator,
  - the top air deflector of the cooling radiator,
  - the front bumper mountings (see **Front bumper support: Removal - Refitting**) (42A, Front upper structure),
  - the headlights (see **Front headlight: Removal - Refitting**) (80B, Headlights),
  - the intercooler air outlet pipe (see **12B**, **Turbocharging**, **Intercooler air outlet pipe: Removal - Refitting**, page **12B-56**) ,
  - the turbocharger air outlet pipe (see **12B**, **Turbocharging**, **Intercooler air inlet pipe: Removal - Refitting**, page **12B-41**) ,
  - the air filter unit (see **12A**, **Fuel mixture**, **Air filter unit: Removal - Refitting**, page **12A-4**) ,
  - the battery tray (see **Battery tray: Removal - Refitting**) (80A, Battery),
  - the air outlet pipe from the air filter unit.
- ❑ Connect the air filter unit air outlet pipe to the turbocharger.
- ❑ Torque tighten the **air filter unit air outlet pipe clip on the turbocharger (5.5 N.m)**.

K9K, and 832

- ❑ Refit the oil vapour rebreathing pipe.
- ❑ Connect the oil vapour rebreathing pipe onto the rocker cover.
- ❑ Connect the oil vapour rebreathing pipe to the air filter box air outlet pipe.
- ❑ Fit the exhaust bracket on the catalytic converter.
- ❑ Refit the exhaust bracket bolts on the catalytic converter.

K9K, and 830 or 832

K9K, and 832

❑ Refit the lower engine tie-bar.

❑ Tighten to torque:

- the **lower engine tie-bar bolt on the subframe (180 N.m)**,
- the **lower engine tie-bar bolt on the lower engine tie-bar support (180 N.m)**.

K9K, and 830

❑ Refit the lower engine tie-bar (see **19D**, **Engine mounting**, **Lower engine tie-bar: Removal - Refitting**, page **19D-33**) .

❑ Refit:

- the new differential output seals (see **Differential output seal: Removal - Refitting**) (21A, Manual gearbox),
- the front left-hand wheel driveshaft (see **Front left-hand wheel driveshaft: Removal - Refitting**) (29A, Driveshafts),
- the front right-hand wheel driveshaft (see **Front right-hand wheel driveshaft: Removal - Refitting**) (29A, Driveshafts).

❑ Refill:

- the engine oil (if necessary) (see **10A**, **Engine and cylinder block assembly**, **Engine oil: Draining - Refilling**, page **10A-40**) ,
- the cooling circuit (see **19A**, **Cooling**, **Cooling circuit: Draining - Refilling**, page **19A-17**) ,
- the manual gearbox (see **Manual gearbox oil: Draining - Refilling**) (21A, Manual gearbox),
- the refrigerant circuit using a **refrigerant charging station** (see **Coolant circuit Draining - Refilling**) (62A, Air conditioning).

❑ Refit:

- the engine undertray,
- the front bumper (see **Front bumper: Removal - Refitting**) (55A, Exterior protection),
- the front section of the front wheel arch liners (see **Front wheel arch liner: Removal - Refitting**) (55A, Exterior protection),
- the front wheels (see **Wheel: Removal - Refitting**) (35A, Wheels and tyres),
- the battery (see **Battery: Removal - Refitting**) (80A, Battery),
- the engine cover.

❑ Adjust the headlight beams (see **Front headlight: Adjusting**) (80B, Headlights).

F9Q

Essential special tooling	
Mot. 1448	Long nose pliers for hose clips.
Mot. 1390	Support for removing/refitting the engine - gearbox assembly.

Essential equipment
refrigerant charging station

Tightening torques ▽	
central bolt of the rubber pad support of the left-hand suspended engine mounting	**105 N.m**
bolt of the "intermediate pipe - compressor" connecting pipe on the compressor	**8 N.m**
earth cable nut on the body	**8 N.m**
power cable nuts on the battery disconnection unit	**8 N.m**
"condenser - expansion valve" connecting pipe bolt on the condenser	**8 N.m**
"compressor - condenser" connecting pipe bolt on the condenser	**8 N.m**

IMPORTANT
Wear leaktight gloves (Nitrile type) for this operation.

WARNING
To prevent impurities from entering the circuit, place protective plugs on all fuel circuit components exposed to the open air.

WARNING
To avoid any corrosion or damage, protect the areas on which fuel is likely to run.

WARNING
Keep the pipe unions away from contaminated areas.

WARNING
To prevent moisture from entering the system, place plugs on the cold loop components which are open to the air.

WARNING
To avoid any leaks, check that the pipe surface is sound before positioning the new seal. The surface must be clean and scratch free.

WARNING
In order to avoid any refrigerant leaks, do not damage (deform, twist, etc.) the pipe.

REMOVAL

I - REMOVAL PREPARATION OPERATION

❑ Position the vehicle on a two-post lift (see **Vehicle: Towing and lifting**) (02A, Lifting equipment).

❑ Remove:

- the engine cover,
- the engine undertray bolts,
- the engine undertray,
- the battery (see **Battery: Removal - Refitting**) (80A, Battery),
- the battery tray (see **Battery tray: Removal - Refitting**) (80A, Battery),
- the air filter unit (see **12A**, **Fuel mixture**, **Air filter unit: Removal - Refitting**, page **12A-4**) ,
- the front wheels (see **Wheel: Removal - Refitting**) (35A, Wheels and tyres),

F9Q

- the front section of the front wheel arch liners (see **Front wheel arch liner: Removal - Refitting**) (55A, Exterior protection),
- the front bumper (see **Front bumper: Removal - Refitting**) (55A, Exterior protection).

❑ Drain:

- the refrigerant circuit using a **refrigerant charging station** (see **Coolant circuit Draining - Refilling**) (62A, Air conditioning),
- the manual gearbox (see **Manual gearbox oil: Draining - Refilling**) (21A, Manual gearbox).
- the cooling system (see **19A**, **Cooling**, **Cooling circuit: Draining - Refilling**, page **19A-17**) ,
- the engine oil (if necessary) (see **10A**, **Engine and cylinder block assembly**, **Engine oil: Draining - Refilling**, page **10A-40**) .

❑ Remove:

- the front right-hand driveshaft (see **Front right-hand wheel driveshaft: Removal - Refitting**) (29A, Driveshafts),
- the front left-hand driveshaft (see **Front left-hand wheel driveshaft: Removal - Refitting**) (29A, Driveshafts),
- the differential output seals (see **Differential output seal: Removal - Refitting**) (21A, Manual gearbox),
- the lower engine tie-bar (see **19D**, **Engine mounting**, **Lower engine tie-bar: Removal - Refitting**, page **19D-33**) .

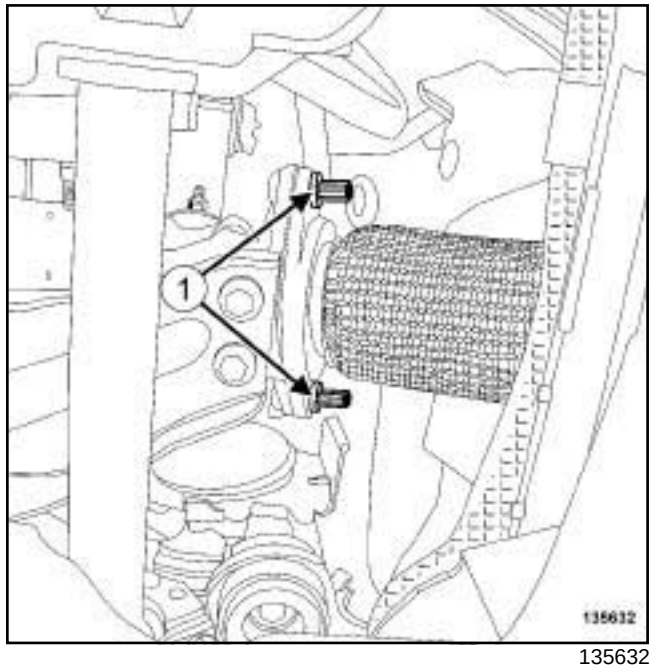

135632

❑ Remove the exhaust bracket nuts.

❑ Move the exhaust pipe to one side.

❑ Remove the exhaust bracket seal.

❑ Remove:

- the headlights (see **Front headlight: Removal - Refitting**) (80B, Headlights),
- the front bumper supports (see **Front bumper support: Removal - Refitting**) (42A, Front upper structure),
- the audible warning (see **Horn: Removal - Refitting**) (82B, Horn),
- the front impact cross member (see **Front impact cross member: Removal - Refitting**) (41A, Front lower structure),
- the cooling radiator air deflectors,
- the bonnet catch (see **Bonnet latch: Removal - Refitting**) (52A, Non-side opening element mechanisms).

F9Q

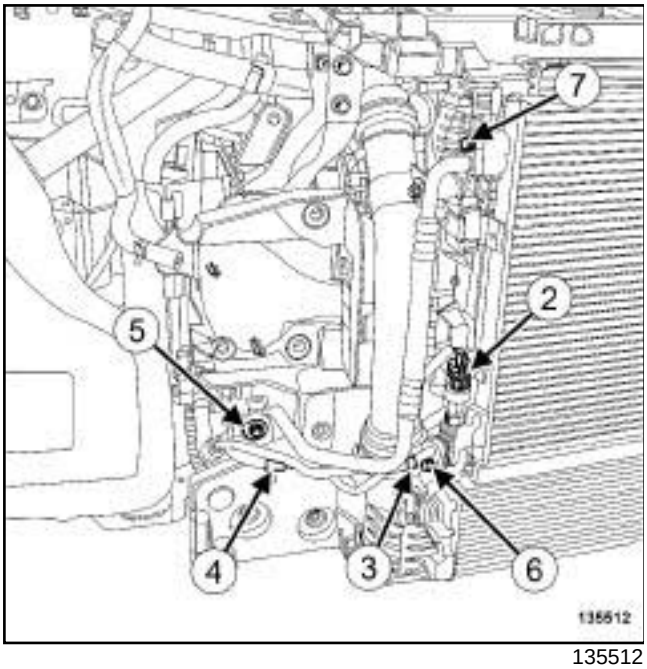

135512

- ❑ Disconnect the connector (**2**) from the refrigerant circuit pressure sensor.
- ❑ Unclip:
  - the refrigerant circuit pressure sensor wiring (**3**) from the "condenser - evaporator" connecting pipe,
  - the refrigerant circuit pressure sensor wiring from the front end panel (**4**) .
- ❑ Move aside the refrigerant circuit pressure sensor wiring.
- ❑ Remove:
  - the retaining bolt (**5**) of the "compressor - condenser" connecting pipe from the body,
  - the bolt (**6**) from the "condenser - expansion valve" connecting pipe bracket,
  - the bolt (**7**) from the "compressor - condenser" connecting pipe bracket.
- ❑ Disconnect:
  - the "condenser - expansion valve" connecting pipe from the condenser,
  - the "compressor - condenser" connecting pipe from the condenser.
- ❑ Remove:
  - the seal of the "condenser - expansion valve" connecting pipe,
  - the seal of the "compressor - condenser" connecting pipe.
- ❑ Insert the blanking plugs.

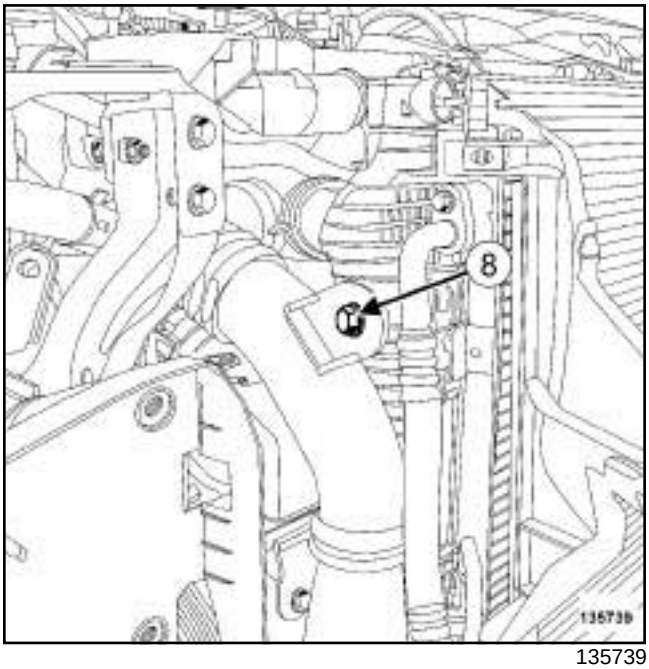

135739

- ❑ Remove the bolt (**8**) from the intercooler air outlet pipe.

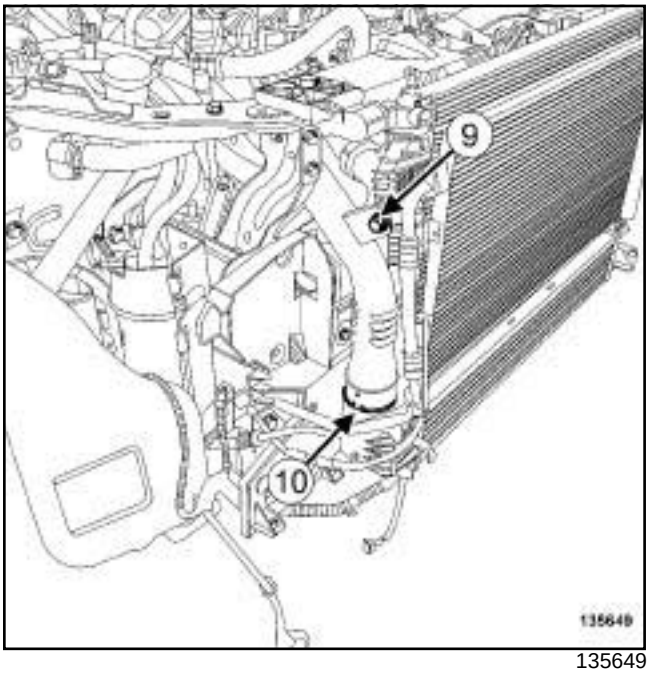

135649

- ❑ Remove the bolt (**9**) from the intercooler air outlet pipe.
- ❑ Pull the clip (**10**) from the intercooler air outlet pipe.
- ❑ Disconnect the intercooler air outlet pipe.
- ❑ Move the intercooler outlet air pipe to one side.

F9Q

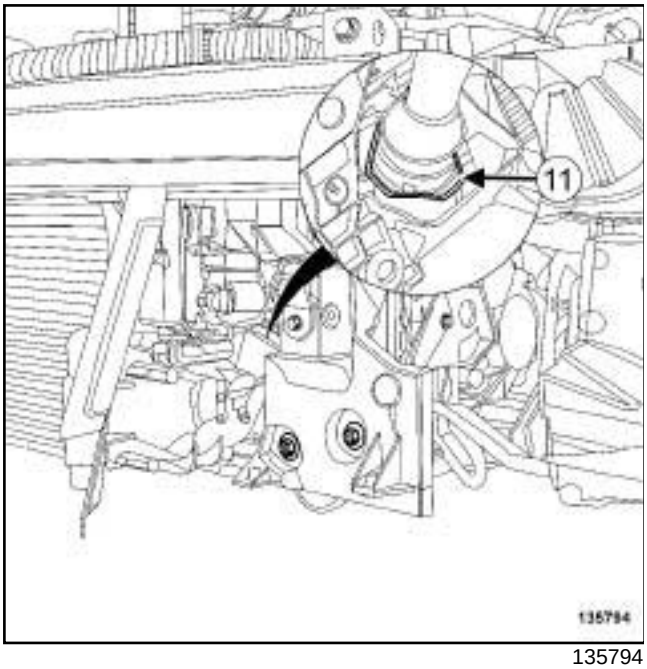

135794

- ❑ Pull the clip (**11**) from the intercooler inlet air pipe.
- ❑ Disconnect the intercooler air inlet pipe.
- ❑ Move the intercooler air outlet pipe to one side.

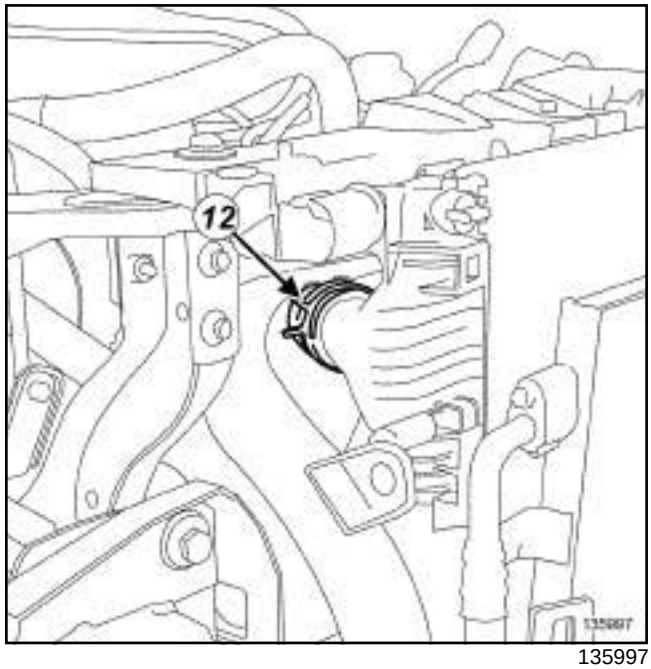

135997

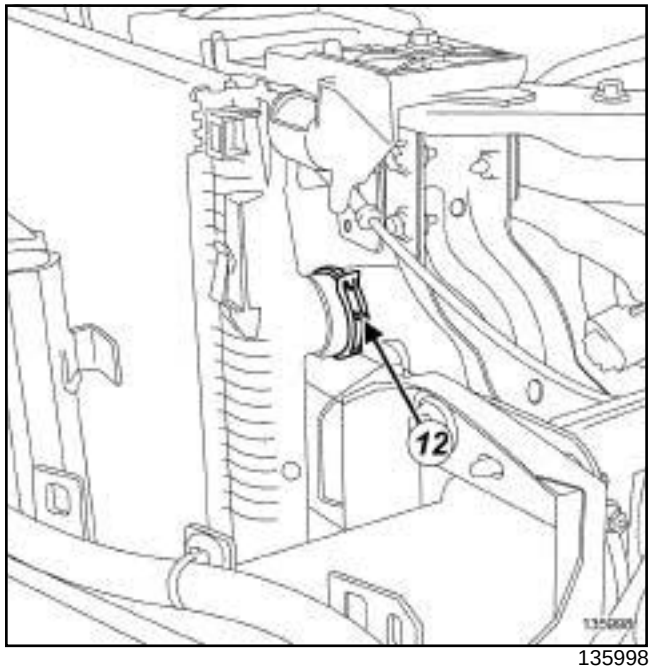

135998

- ❑ Separate the radiator hose clips (**12**) using the tool **(Mot. 1448)**.
- ❑ Disconnect the radiator hoses.

F9Q

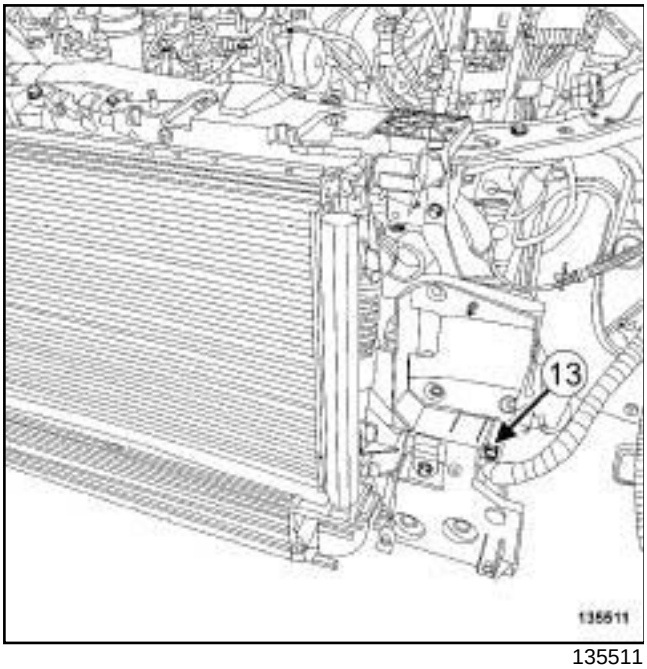

135511

❑ Unclip the engine wiring (**13**) from the front end panel.

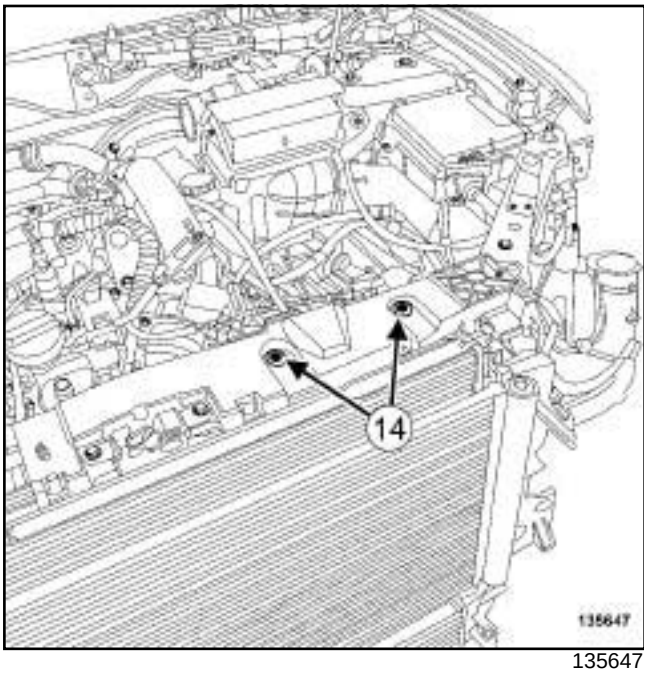

135647

❑ Remove the bolts (**14**) from the engine wiring channel.

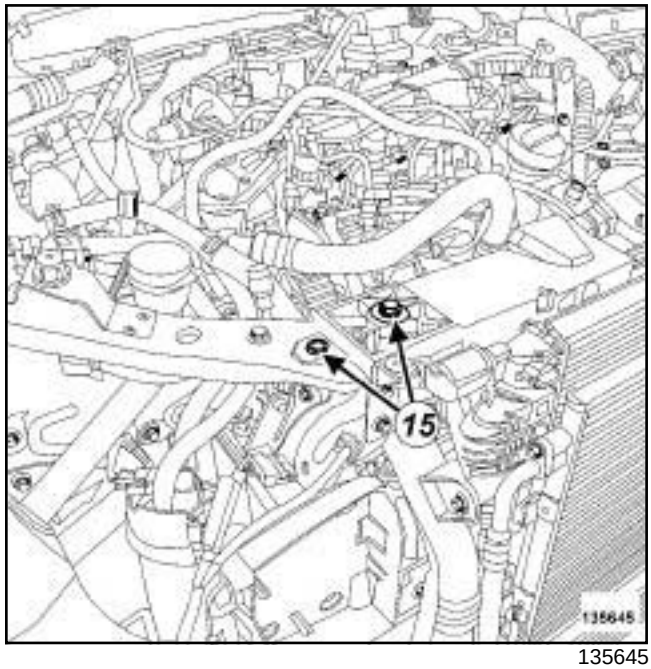

135645

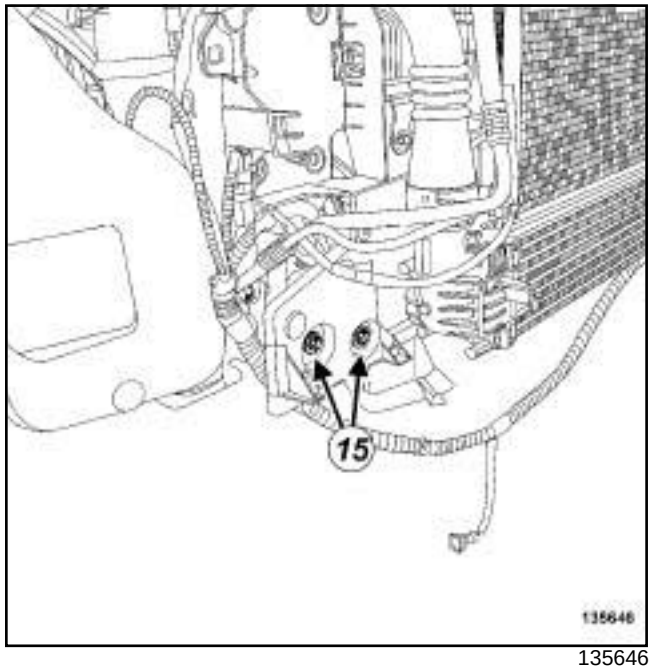

135646

❑ Remove the front end panel bolts (**15**) .

F9Q

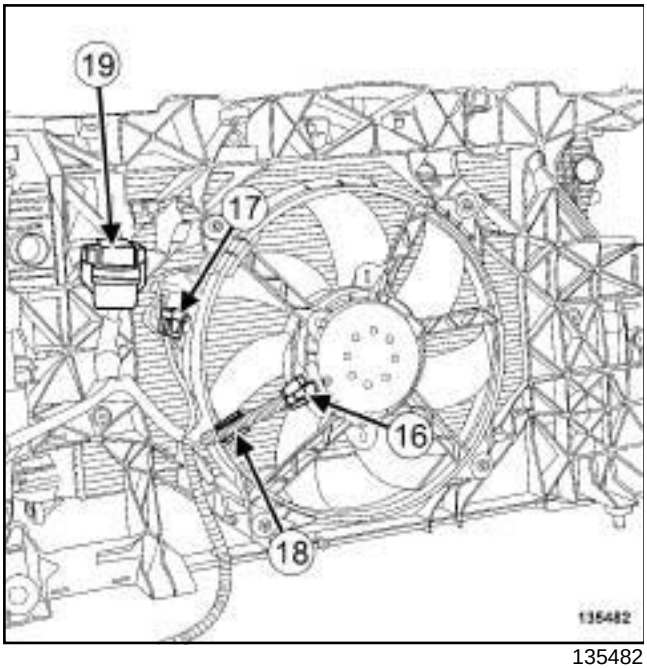

135482

❑ Disconnect:

- the fan assembly connector (**16**) ,
- the fan assembly resistor connector (**17**) .

❑ Unclip:

- the fan assembly wiring (**18**) ,
- the relay unit (**19**) .

❑ Move aside the fan assembly wiring.

❑ Remove:

- the front panel,
- the radiator mounting cross member (see **Radiator support cross member: Removal - Refitting**) (31A, Front axle components).

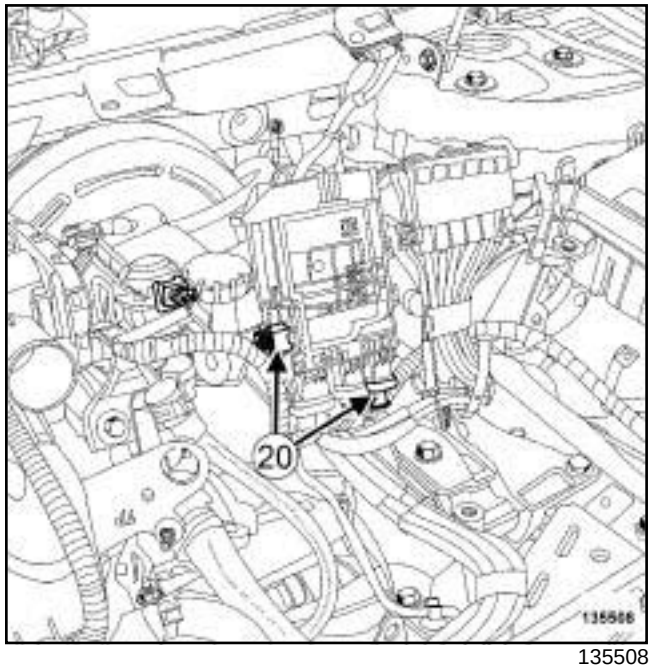

135508

❑ Disconnect the connectors (**20**) from the battery disconnection unit.

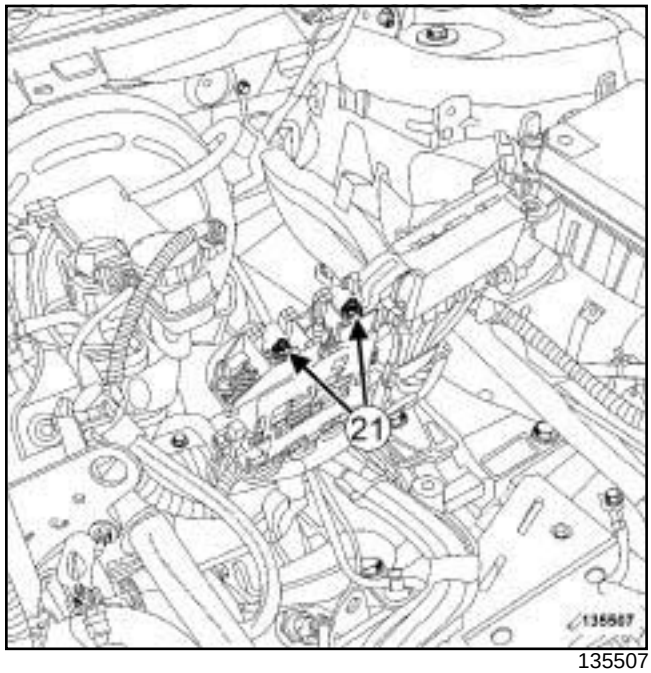

135507

❑ Remove the power cable nuts (**21**) from the battery disconnection unit.

❑ Move aside the power cables.

F9Q

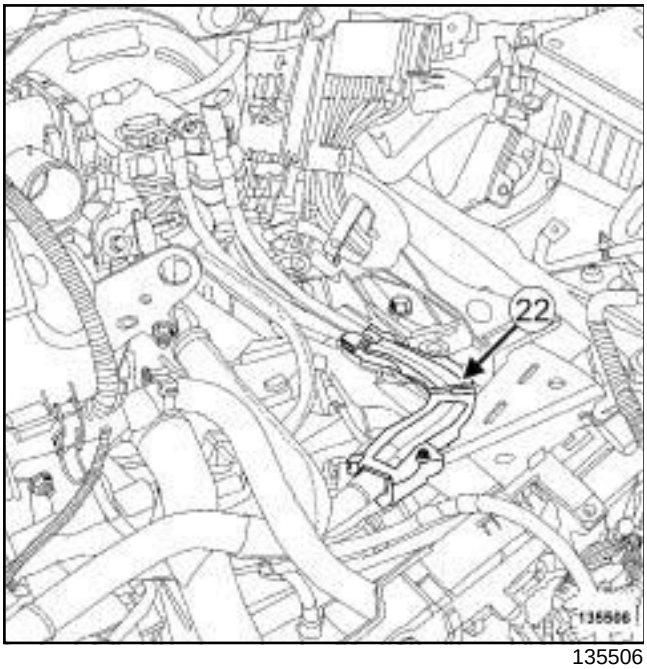

135506

❑ Unclip the power wiring channel (**22**) from the left-hand suspended engine mounting.

❑ Remove the air resonator (see **12A**, **Fuel mixture**, **Air resonator: Removal - Refitting**, page **12A-1**) .

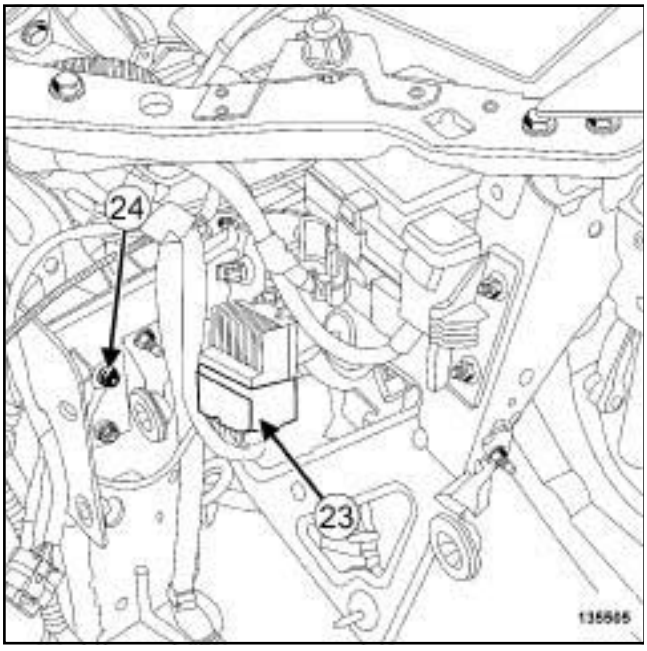

135505

❑ Disconnect the connector (**23**) from the pre-postheating unit.

❑ Remove the earth cable nut (**24**) .

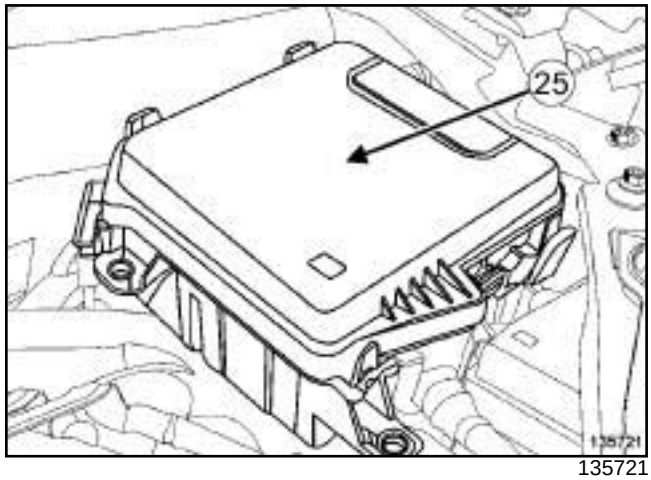

135721

❑ Remove the cover (**25**) from the Protection and Switching Unit.

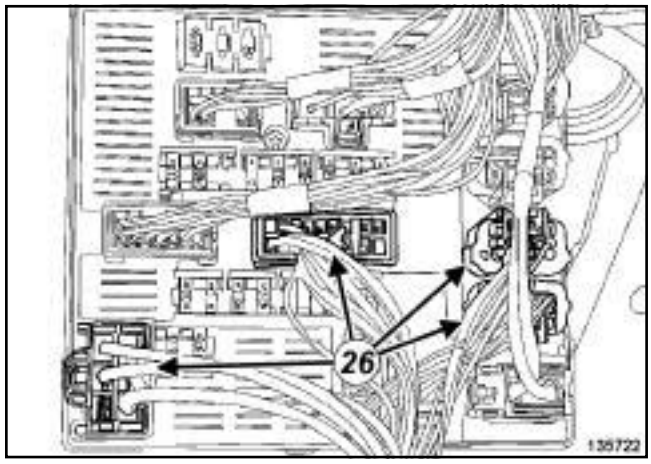

135722

❑ Disconnect the connectors (**26**) from the Protection and Switching Unit.

F9Q

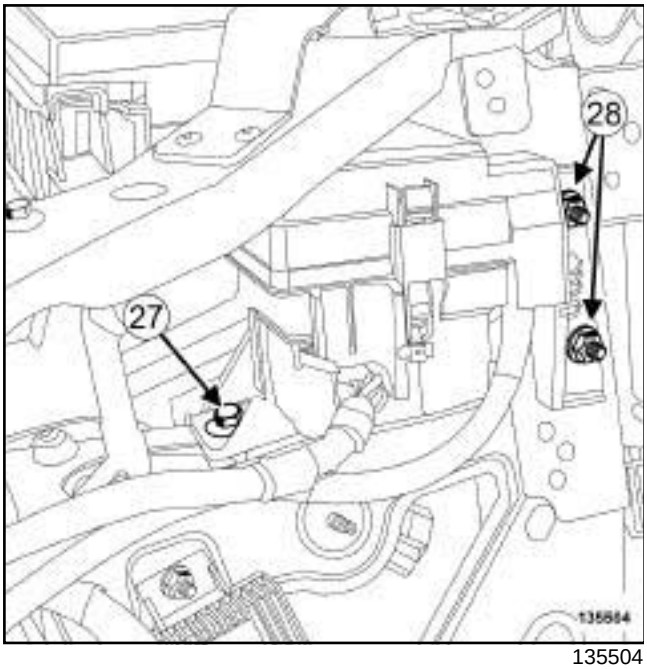

135504

❑ Remove:

- the bolt (**27**) from the engine fuse box,
- the nuts (**28**) from the engine fuse box.

❑ Move aside the engine fuse box.

❑ Remove the hydraulic clutch pipe (see **Clutch circuit: Removal - Refitting**) .

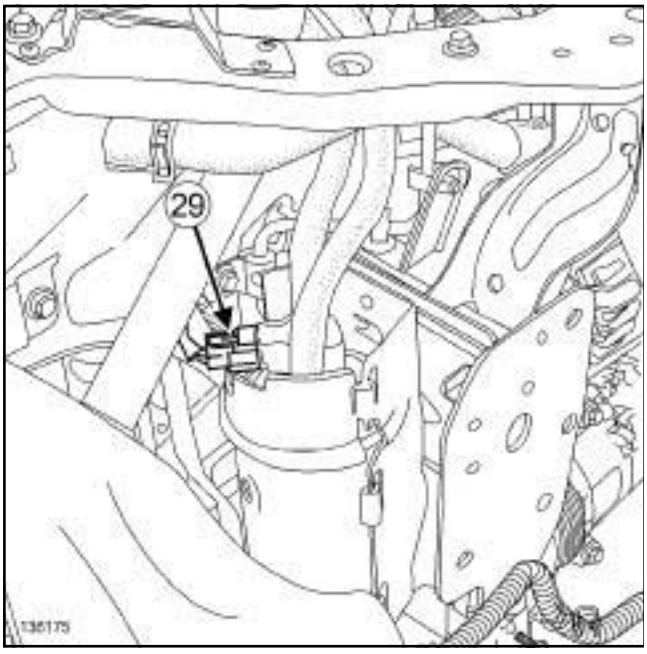

136175

❑ Disconnect the diesel heater connector (**29**) .

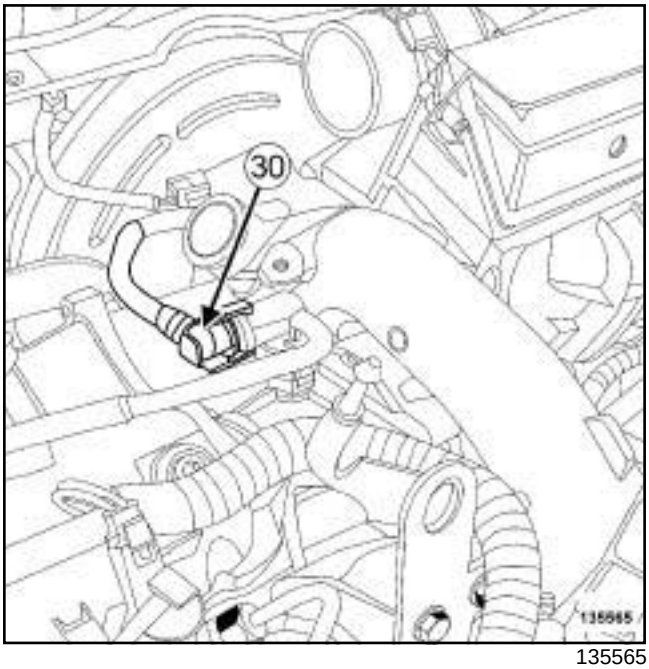

135565

❑ Disconnect the vacuum pipe union (**30**) from the vacuum pump.

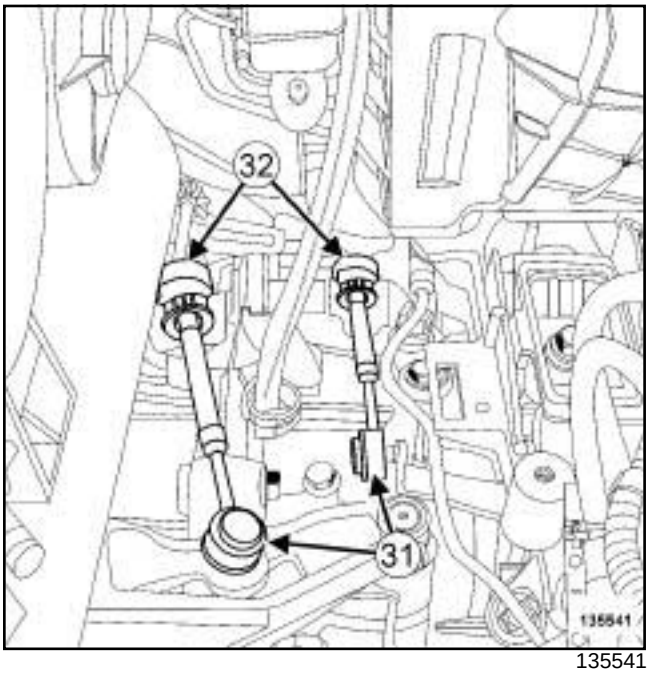

135541

❑ Unclip:

- the gear control cables (**31**) from the selector ball joints using an open-jawed spanner,
- the gear control cables (**32**) from their support.

F9Q

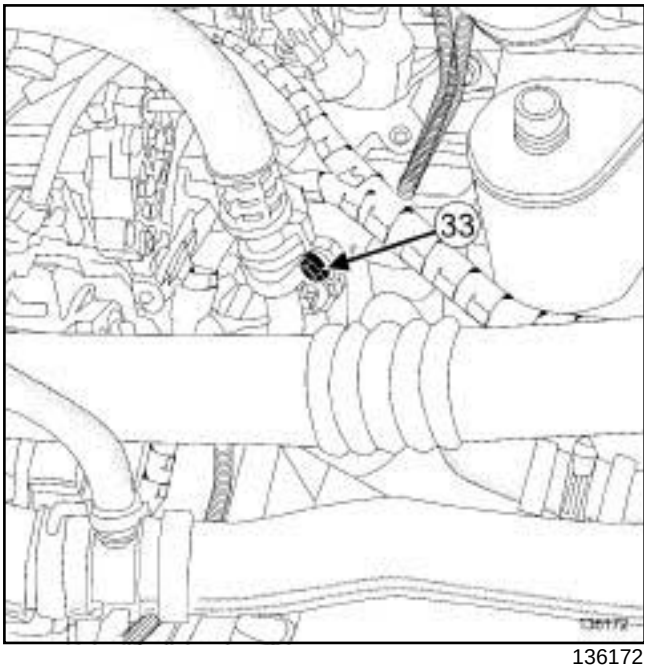

136172

❑ Remove the retaining bolt (**33**) from the "intermediate pipe - compressor" connecting pipe.

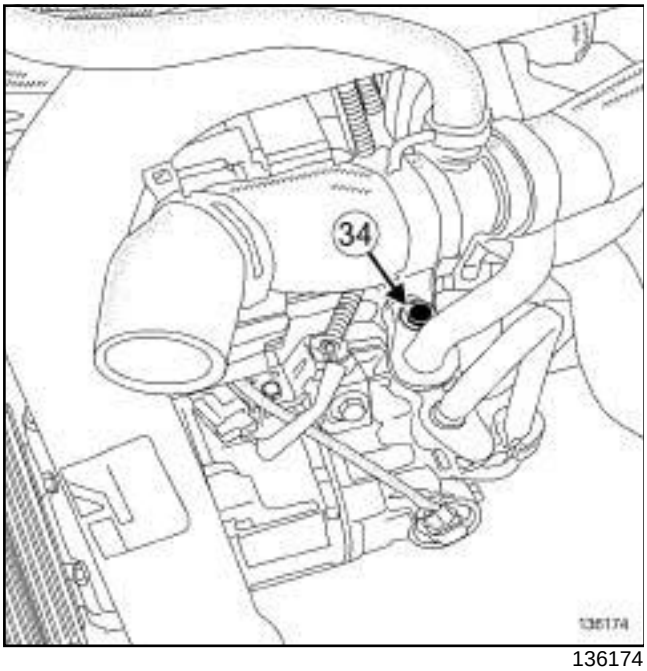

136174

❑ Remove the bolt (**34**) from the "intermediate pipe - compressor" connecting pipe.

❑ Disconnect the "intermediate pipe - compressor" connecting pipe from the compressor.

❑ Remove the seal from the "intermediate pipe - compressor" connecting pipe.

❑ Insert the blanking plugs.

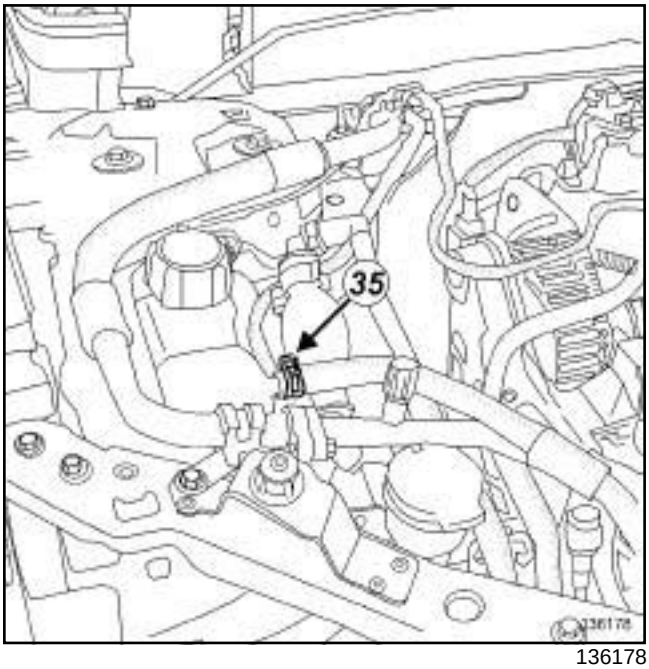

136178

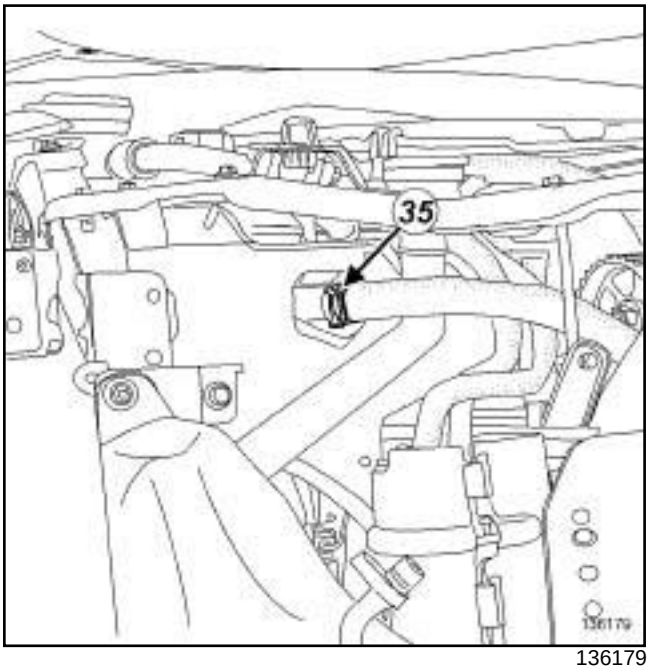

136179

❑ Separate the clips (**35**) on the expansion bottle hoses using the tool **(Mot. 1448)**.

❑ Disconnect the hoses from the expansion bottle.

F9Q

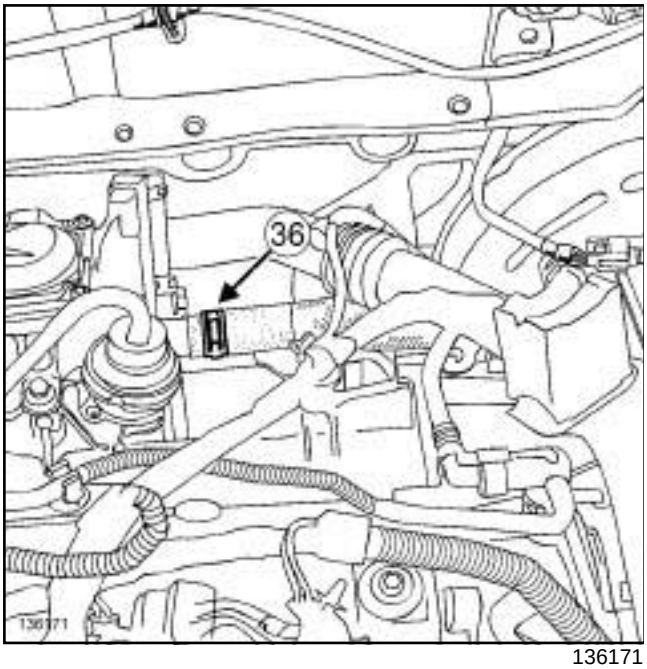

136171

❑ Separate the clip (**36**) of the exhaust cooler hose using the tool **(Mot. 1448)**.

❑ Disconnect the hose from the exhaust cooler.

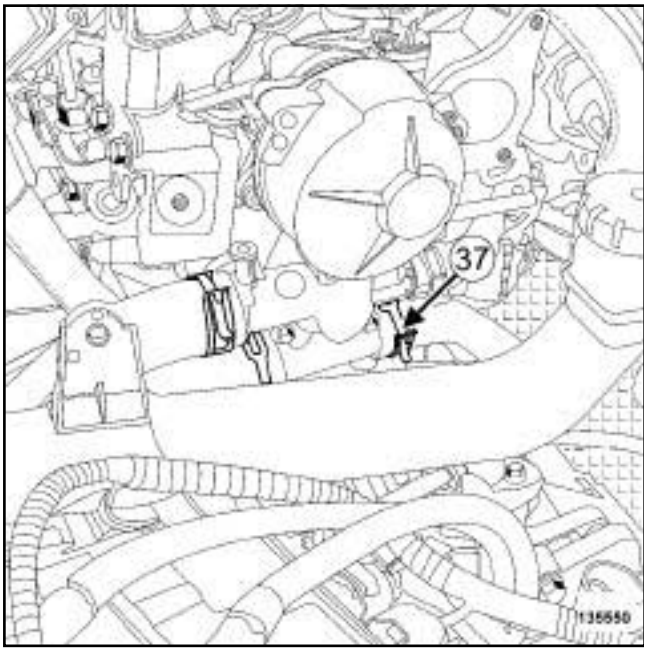

135550

❑ Separate the clip (**37**) of the coolant outlet unit hose using the tool **(Mot. 1448)**.

❑ Disconnect the hose from the coolant outlet unit.

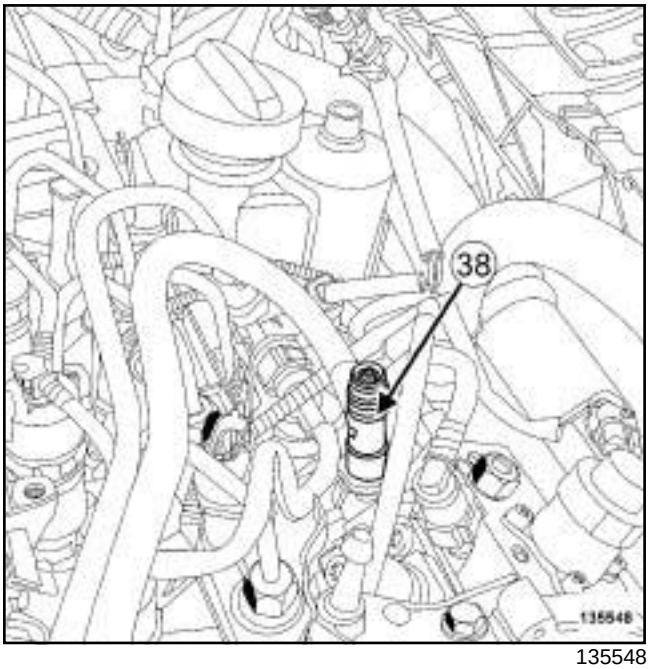

135548

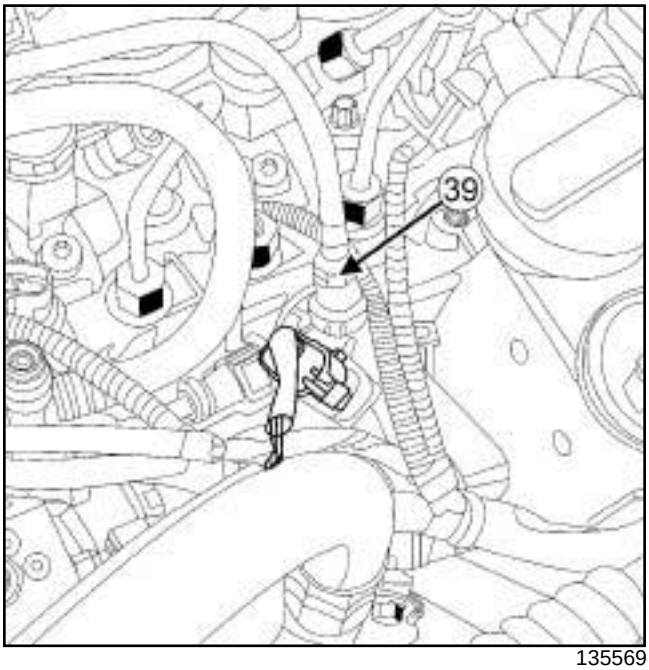

135569

❑ Disconnect:

- the fuel supply pipe union (**38**) ,
- the diesel return pipe union (**39**) .

❑ Insert the blanking plugs.

F9Q

II - OPERATION FOR REMOVAL OF PART CONCERNED

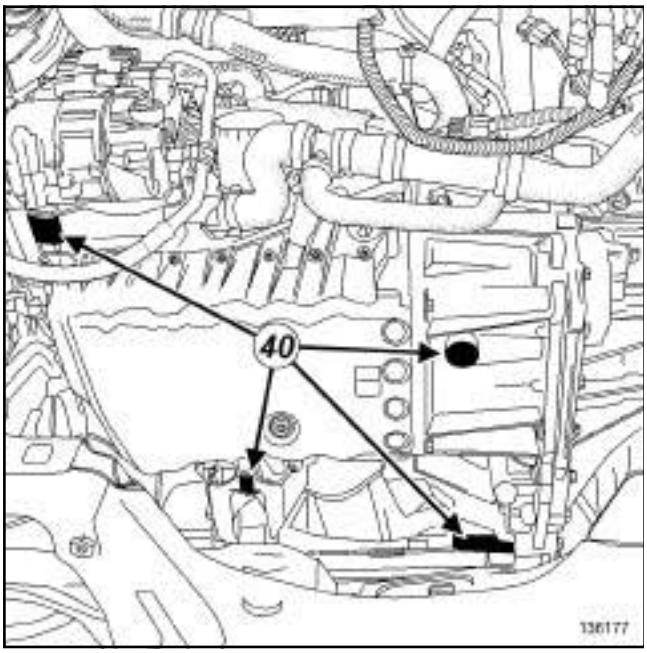

136177

- ❑ Support the "engine - gearbox" assembly on the marks (**40**) using the tool **(Mot. 1390)**.
- ❑ Remove the right-hand suspended engine mounting (see **19D**, **Engine mounting**, **Right-hand suspended engine mounting: Removal - Refitting**, page **19D-18**) .

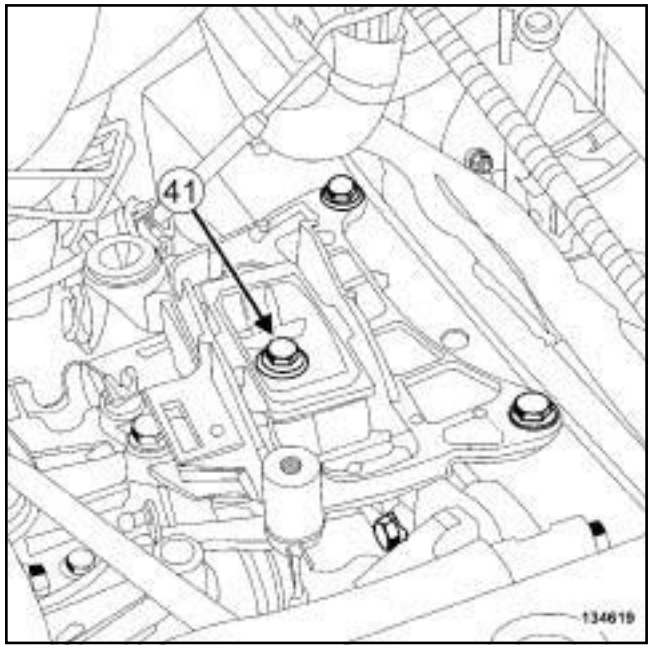

134619

- ❑ Remove the central bolt (**41**) of the rubber pad support of the left-hand suspended engine mounting.
- ❑ Raise the vehicle, moving the engine towards the front.
- ❑ Remove the engine - gearbox assembly.

REFITTING

I - REFITTING PREPARATION OPERATION

- ❑ For standard engine replacements (see **Engine: Standard replacement**) (Technical Note 6007A, 10A, Engine and peripherals).
- ❑ **parts always to be replaced: refrigerant pipe seal (30,02,02,52)**.
- ❑ Always replace the exhaust bracket seal.

II - REFITTING OPERATION FOR PART CONCERNED

- ❑ Position the "engine - gearbox" assembly in the vehicle.
- ❑ Refit the central bolt of the rubber pad support of the left-hand suspended engine mounting.
- ❑ Torque tighten the **central bolt of the rubber pad support of the left-hand suspended engine mounting (105 N.m)**.
- ❑ Refit the right-hand suspended engine mounting (see **19D**, **Engine mounting**, **Right-hand suspended engine mounting: Removal - Refitting**, page **19D-18**) .

F9Q

❏ Remove the tool **(Mot. 1390)** from the "engine - gearbox" assembly.

III - FINAL OPERATION

❏ Remove the blanking plugs.

❏ Connect:

- the diesel return pipe union,
- the fuel supply pipe union,
- the coolant outlet unit hose.

❏ Fit the clip on the coolant outlet unit hose using the tool **(Mot. 1448)**.

❏ Connect the exhaust cooler hose.

❏ Fit the clip on the exhaust cooler hose using the tool **(Mot. 1448)**.

❏ Connect the expansion bottle hoses.

❏ Fit the clips on the expansion bottle hoses using the tool **(Mot. 1448)**.

❏ Remove the blanking plugs.

❏ Lubricate a new seal with the recommended air conditioning oil to make fitting easier (see **Air conditioning: Parts and consumables for the repair work**) (62A, Air conditioning).

❏ Refit the new seal on the "intermediate pipe - compressor" connecting pipe on the compressor side.

❏ Couple the "intermediate pipe - compressor" connecting pipe on the compressor.

❏ Torque tighten the **bolt of the "intermediate pipe - compressor" connecting pipe on the compressor (8 N.m)**.

❏ Refit the retaining bolt of the "intermediate pipe - compressor" connecting pipe.

❏ Clip the gear control cables:

- on their support,
- on the selector ball joints.

❏ Connect:

- the vacuum pipe union on the vacuum pump,
- the diesel fuel heater connector,

❏ Refit:

- the hydraulic clutch pipe (see **Clutch circuit: Removal - Refitting**) ,
- the engine fuse box.

❏ Connect the Protection and Switching Unit connectors.

❏ Refit:

- the Protection and Switching Unit cover,
- the earth cable nut on the body.

❏ Torque tighten the **earth cable nut on the body (8 N.m)**.

❏ Connect the pre-postheating unit connector.

❏ Refit the air resonator (see **12A**, **Fuel mixture**, **Air resonator: Removal - Refitting**, page **12A-1**) .

❏ Clip the power wiring channel on the left-hand suspended engine mounting.

❏ Refit the power cable nuts on the battery disconnection unit.

❏ Torque tighten the **power cable nuts on the battery disconnection unit (8 N.m)**.

❏ Connect the connectors of the battery disconnection unit.

❏ Refit:

- the radiator mounting cross member (see **Radiator support cross member: Removal - Refitting**) (31A, Front axle components),
- the front of the vehicle.

❏ Clip:

- the relay unit on the front end panel,
- the fan assembly wiring on the fan assembly.

❏ Connect:

- the fan unit resistor connector,
- the motor-driven fan assembly connector.

❏ Clip the engine wiring on the front end panel.

❏ Refit the bolts of the engine wiring channel on the front end panel.

❏ Connect the radiator hoses.

❏ Fit the radiator hose clips using the tool **(Mot. 1448)**.

❏ Push back the clip of the intercooler air inlet pipe.

❏ Clip the intercooler air inlet pipe on the intercooler.

❏ Push back the clip of the intercooler air outlet pipe.

❏ Clip the intercooler air outlet pipe onto the intercooler.

❏ Refit the bolt on the intercooler air outlet pipe.

❏ Remove the blanking plugs.

❏ Lubricate new seals with the recommended air conditioning oil to make fitting easier (see **Air conditioning: Parts and consumables for the repair work**) (62A, Air conditioning).

F9Q

❏ Fit the new seals on:

- the "condenser - expansion valve" connecting pipe on the condenser side,
- the "compressor - condenser" connecting pipe on the condenser side.

❏ Connect:

- the "condenser - expansion valve" connecting pipe on the condenser,
- the "compressor - condenser" connecting pipe on the condenser.

❏ Tighten to torque:

- the **"condenser - expansion valve" connecting pipe bolt on the condenser (8 N.m)**,
- the **"compressor - condenser" connecting pipe bolt on the condenser (8 N.m)**.

❏ Refit the retaining bolt of the "compressor - condenser" pipe.

❏ Clip on the wiring of the refrigerant circuit pressure sensor.

❏ Connect the connector of the refrigerant circuit pressure sensor.

❏ Refit:

- the bonnet catch (see **Bonnet latch: Removal - Refitting**) (52A, Non-side opening element mechanisms),
- the cooling radiator air deflectors,
- the front impact cross member (see **Front impact cross member: Removal - Refitting**) (41A, Front lower structure),
- the audible warning (see **Horn: Removal - Refitting**) (82B, Horn),
- the front bumper supports (see **Front bumper support: Removal - Refitting**) (42A, Front upper structure),
- the headlights (see **Front headlight: Removal - Refitting**) (80B, Headlights),
- a new exhaust bracket seal,
- the exhaust bracket nuts,
- the lower engine tie-bar (see **19D**, **Engine mounting**, **Lower engine tie-bar: Removal - Refitting**, page **19D-33**) ,
- the differential output seals (see **Differential output seal: Removal - Refitting**) (21A, Manual gearbox),
- the front left-hand driveshaft (see **Front left-hand wheel driveshaft: Removal - Refitting**) (29A, Driveshafts),
- the front right-hand driveshaft (see **Front right-hand wheel driveshaft: Removal - Refitting**) (29A, Driveshafts).

❏ Refill:

- the engine oil (if necessary) (see **10A**, **Engine and cylinder block assembly**, **Engine oil: Draining - Refilling**, page **10A-40**) ,
- the cooling circuit (see **19A**, **Cooling**, **Cooling circuit: Draining - Refilling**, page **19A-17**) ,
- the manual gearbox (see **Manual gearbox oil: Draining - Refilling**) (21A, Manual gearbox),
- the refrigerant circuit using a **refrigerant charging station** (see **Coolant circuit Draining - Refilling**) (62A, Air conditioning).

❏ Refit:

- the front bumper (see **Front bumper: Removal - Refitting**) (55A, Exterior protection),
- the front section of the front wheel arch liners (see **Front wheel arch liner: Removal - Refitting**) (55A, Exterior protection),
- the front wheels (see **Wheel: Removal - Refitting**) (35A, Wheels and tyres),
- the air filter unit (see **12A**, **Fuel mixture**, **Air filter unit: Removal - Refitting**, page **12A-4**) ,
- the battery tray (see **Battery tray: Removal - Refitting**) (80A, Battery),
- the battery (see **Battery : Removal - Refitting**) (80A, Battery),
- the engine undertray,
- the engine cover.

F4R

Essential special tooling	
Mot. 1448	Long nose pliers for hose clips.
Mot. 1390	Support for removing/refitting the engine - gearbox assembly.

Essential equipment
refrigerant charging station
indelible pencil

Tightening torques ▽	
bolt of the left-hand suspended engine mounting support on the gearbox	**105 N.m**
bolt of the connecting pipe between the « intermediate pipe - compressor »	**8 N.m**
earth cable nut on the body	**8 N.m**
power cable nuts on the battery disconnection unit	**8 N.m**
bolt of the connecting pipe between the « condenser - expansion valve »	**8 N.m**
bolt of the connecting pipe between the « compressor - condenser »	**8 N.m**

WARNING
In order to avoid any refrigerant leaks, do not damage (deform, twist, etc.) the pipe.

WARNING
To prevent moisture from entering the system, place plugs on the cold loop components which are open to the air.

IMPORTANT
Wear protective gloves during the operation.

REMOVAL

I - REMOVAL PREPARATION OPERATION

❑ Position the vehicle on a two-post lift (see **Vehicle: Towing and lifting**) (02A, Lifting equipment).

IMPORTANT
To prevent the vehicle from falling, lash it to the vehicle lift using a strap.

❑ Remove:

- the engine cover,
- the battery (see **Battery: Removal - Refitting**) (80A, Battery),
- the battery tray (see **Battery tray: Removal - Refitting**) (80A, Battery),
- the air filter unit (see **12A**, **Fuel mixture**, **Air filter unit: Removal - Refitting**, page **12A-4**) ,
- the engine undertray bolts,
- the engine undertray,
- the front wheels (see **Wheel: Removal - Refitting**) (35A, Wheels and tyres),
- the front section of the front wheel arch liners (see **Front wheel arch liner: Removal - Refitting**) (55A, Exterior protection),
- the front bumper (see **Front bumper: Removal - Refitting**) (55A, Exterior protection).

❑ Drain:

- the refrigerant circuit using a **refrigerant charging station** (see **Coolant circuit Draining - Refilling**) (62A, Air conditioning),
- the manual gearbox (see **Manual gearbox oil: Draining - Refilling**) (21A, Manual gearbox).
- the cooling system (see **19A**, **Cooling**, **Cooling circuit: Draining - Refilling**, page **19A-17**) ,
- the engine oil (if necessary) (see **10A**, **Engine and cylinder block assembly**, **Engine oil: Draining - Refilling**, page **10A-40**) .

❑ Remove:

- the front right-hand wheel driveshaft (see **Front right-hand wheel driveshaft: Removal - Refitting**) (29A, Driveshafts),

F4R

- the front left-hand wheel driveshaft (see **Front left-hand wheel driveshaft: Removal - Refitting**) (29A, Driveshafts),
- the differential output seals (see **Differential output seal: Removal - Refitting**) (21A, Manual gearbox),
- the lower engine tie-bar (see **19D**, **Engine mounting**, **Lower engine tie-bar: Removal - Refitting**, page **19D-33**) ,
- the connecting hose (see **19B**, **Exhaust**, **Connecting hose: Removal - Refitting**, page **19B-60**) ,
- the front impact cross member (see **Front impact cross member: Removal - Refitting**) (41A, Front lower structure),
- the upper air deflector,
- the side air deflectors,
- the audible warning (see **Horn: Removal - Refitting**) (82B, Horn),
- the headlights (see **Front headlight: Removal - Refitting**) (80B, Headlights),
- the front bumper mountings (see **Front bumper support: Removal - Refitting**) (42A, Front upper structure),
- the bonnet catch (see **Bonnet latch: Removal - Refitting**) (52A, Non-side opening element mechanisms).

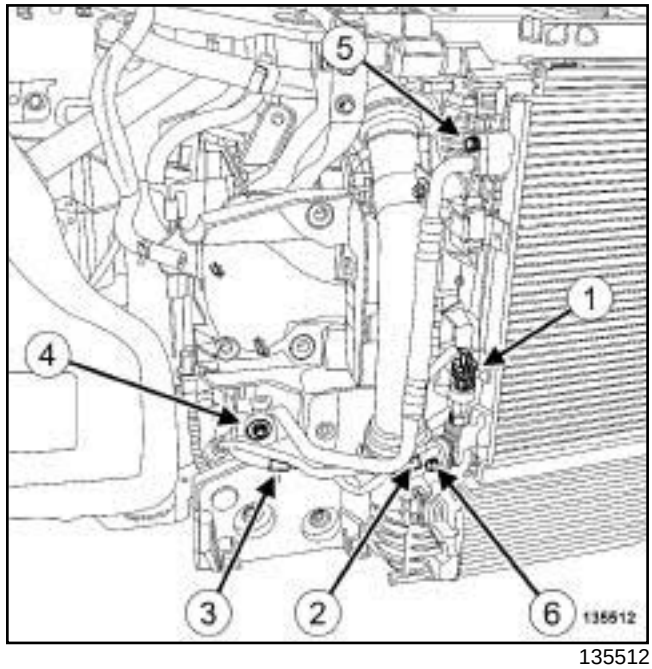

135512

❑ Disconnect the connector (**1**) from the refrigerant circuit pressure sensor.

❑ Unclip:

- the refrigerant circuit pressure sensor wiring from the « condenser - expansion valve » connecting pipe at (**2**) ,
- the refrigerant circuit pressure sensor wiring from the front end panel at (**3**) .

❑ Move aside the refrigerant circuit pressure sensor wiring.

❑ Remove:

- the retaining bolt (**4**) of the « compressor - condenser » connecting pipe from the body,
- the bolt (**5**) of the « compressor - condenser » connecting pipe bracket from the condenser.

❑ Disconnect the « compressor - condenser » connecting pipe from the condenser.

❑ Remove the seal of the « compressor - condenser » connecting pipe on the condenser side.

❑ Insert the blanking plugs.

❑ Remove the bolt (**6**) from the « condenser - expansion valve » connecting pipe.

❑ Disconnect the « condenser - expansion valve » connecting pipe from the condenser.

❑ Remove the seal of the « condenser - expansion valve » connecting pipe on the condenser side.

❑ Insert the blanking plugs.

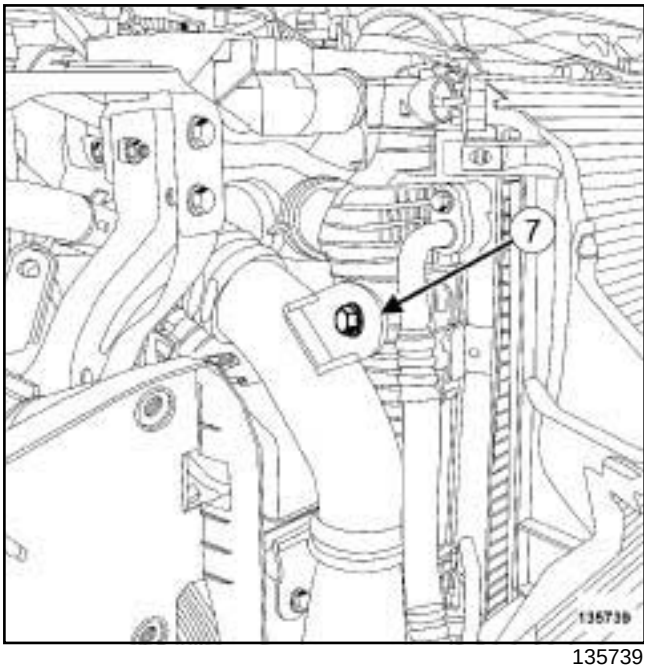

135739

❏ Remove the bolt (**7**) on the intercooler air outlet pipe.

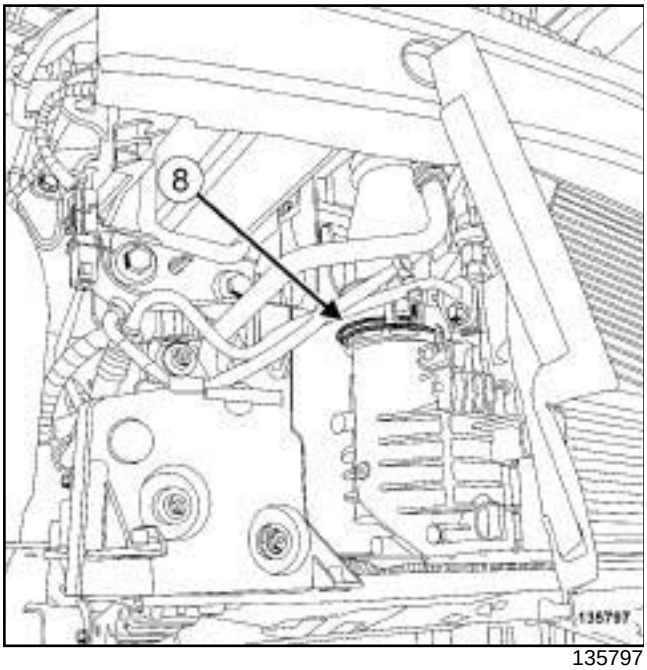

135797

❏ Unclip the intercooler air outlet pipe at (**8**) .

❏ Disconnect the intercooler air outlet pipe.

❏ Move the intercooler outlet air pipe to one side.

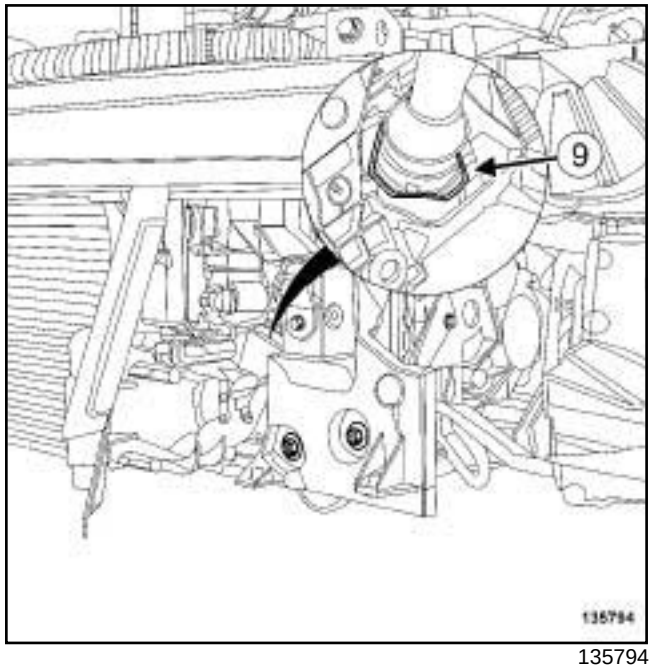

135794

❏ Unclip the intercooler air inlet pipe at (**9**) .

❏ Disconnect the intercooler air inlet pipe.

❏ Move the intercooler air outlet pipe to one side.

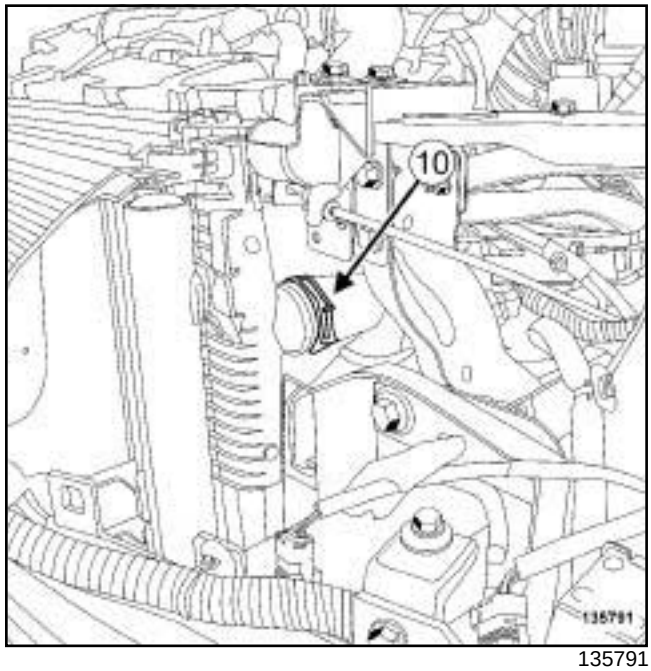

135791

❏ Separate the top cooling hose clip (**10**) on the radiator using the tool **(Mot. 1448)**.

❏ Disconnect the top cooling hose from the radiator.

F4R

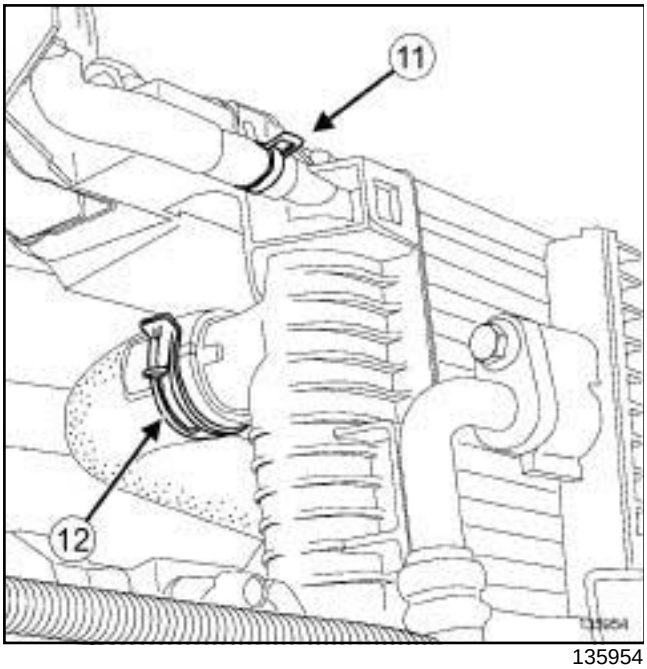

135954

❑ Separate the following on the radiator:

- the expansion bottle top cooling hose clip **(Mot. 1448)** using the tool (**11**) ,
- the bottom cooling hose clip (**12**) using the tool **(Mot. 1448)**.

❑ Disconnect:

- the expansion bottle top cooling hose,
- the radiator bottom cooling hose.

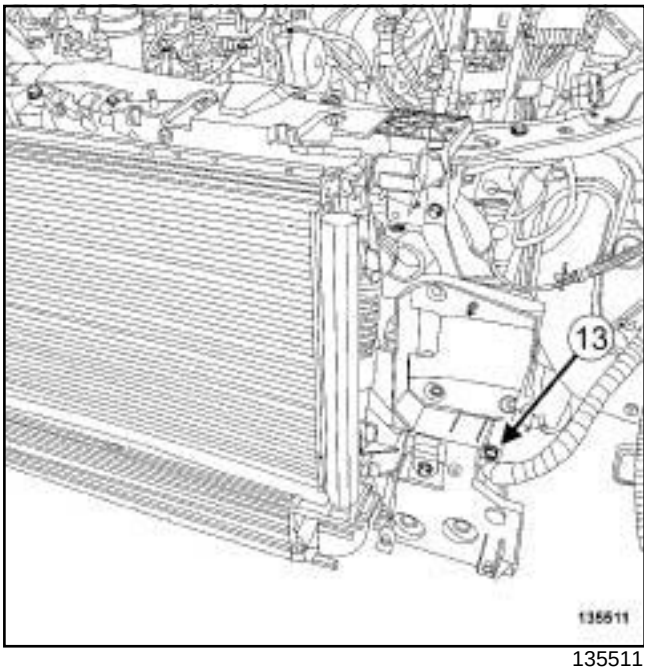

135511

❑ Unclip from the front end panel:

- the wiring at (**13**) ,
- the expansion bottle top cooling hose.

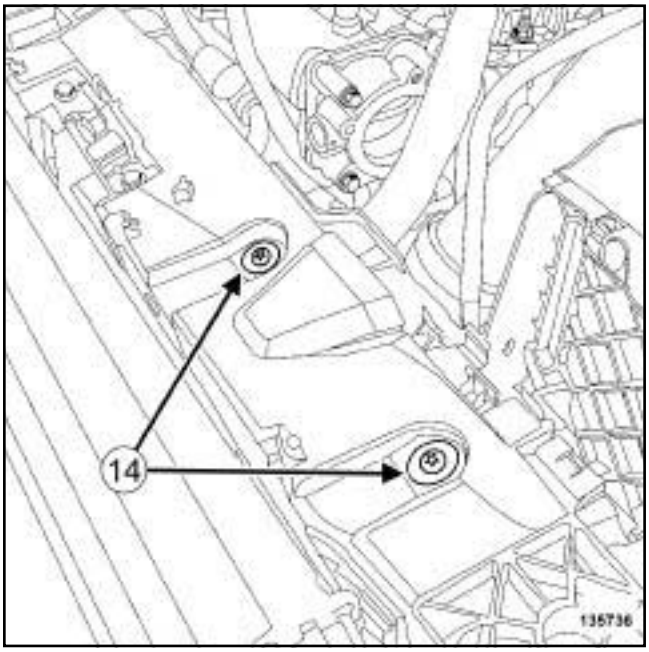

135736

❑ Remove the bolts (**14**) from the fan assembly wiring channel.

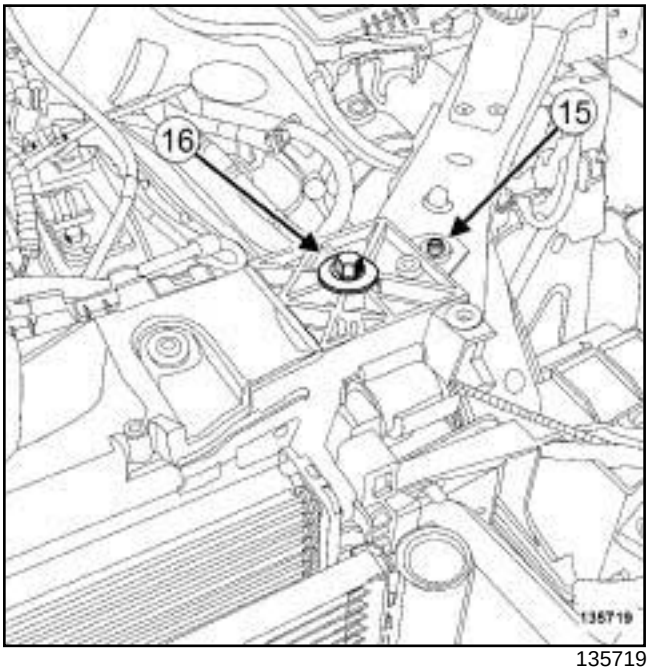

135719

❑ Remove:

- the front end panel clips (**15**) ,
- the front end panel upper bolts (**16**) .

F4R

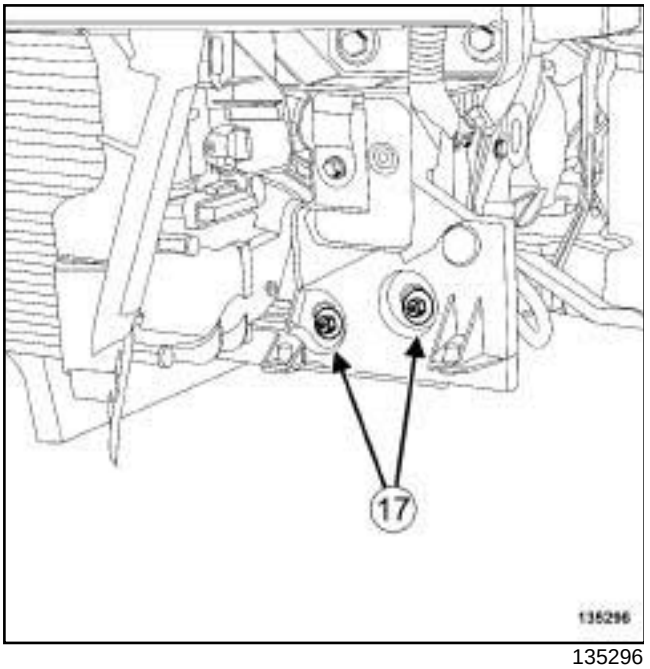

135296

❑ Remove the lower bolts (**17**) from the front end panel.

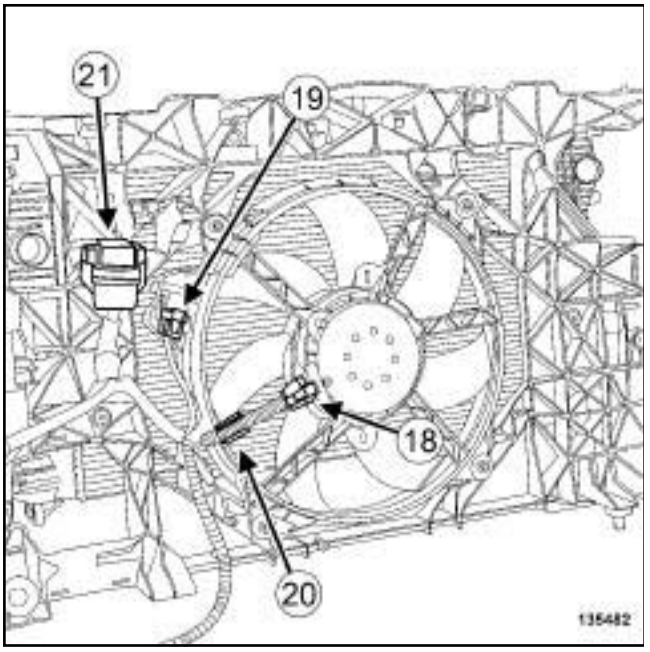

135482

❑ Disconnect:

- the fan assembly connector (**18**) ,
- the fan unit resistor connector (**19**) .

❑ Unclip:

- the fan assembly wiring from the fan assembly at (**20**) ,
- the relay unit (**21**) from the front end panel.

❑ Move aside the fan assembly wiring.

❑ Remove the front end panel.

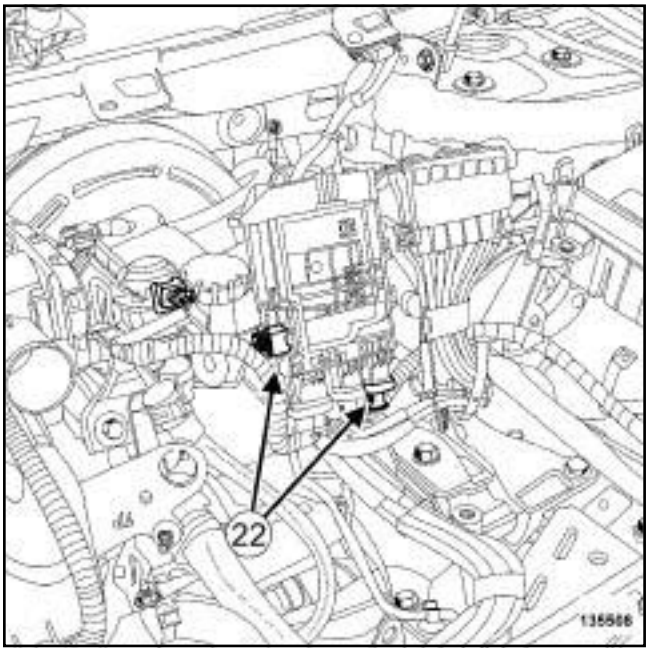

135508

❑ Disconnect the connectors (**22**) from the battery disconnection unit.

❑ Unclip the wiring of the offset positive terminal.

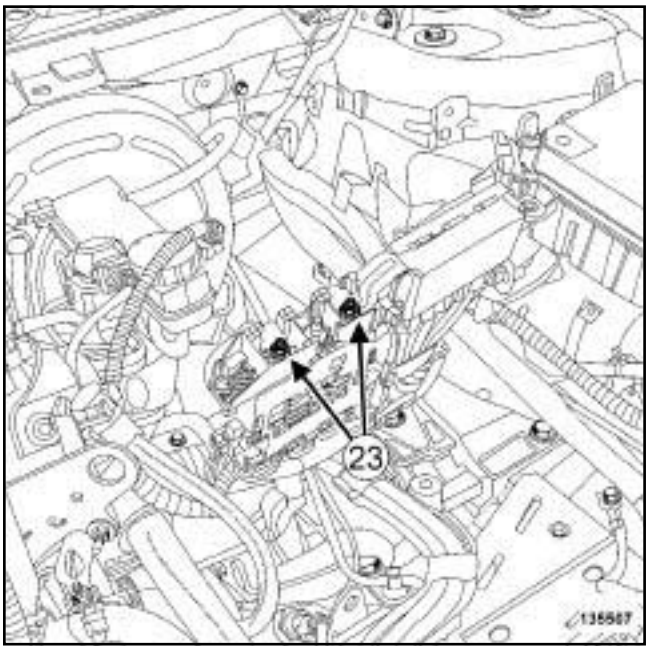

135507

❑ Remove the power cable nuts (**23**) from the battery disconnection unit.

❑ Move aside the power cables.

F4R

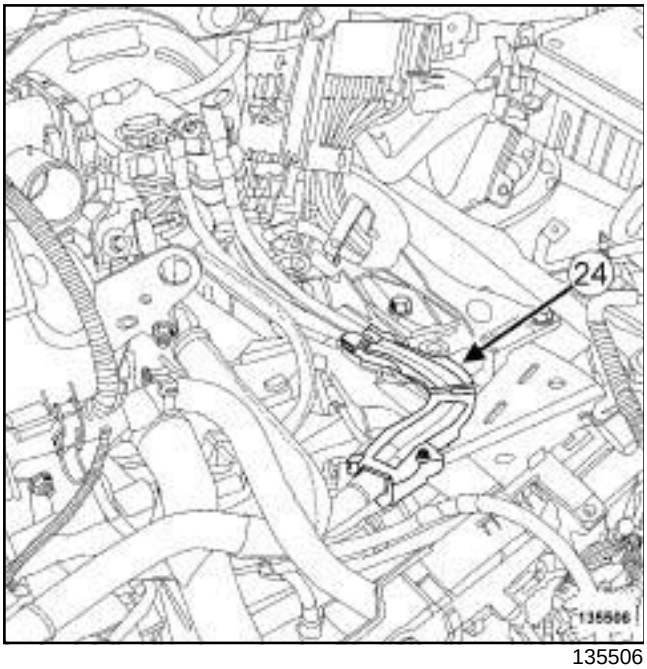

135506

❑ Unclip the power wiring channel (**24**) from the left-hand suspended engine mounting.

❑ Remove the air resonator (see **12A**, **Fuel mixture**, **Air resonator: Removal - Refitting**, page **12A-1**) .

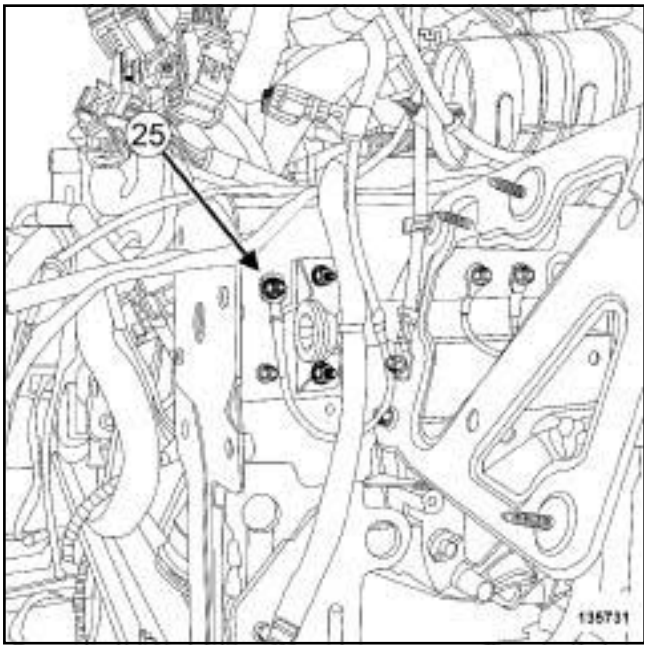

135731

❑ Remove the earth cable nut (**25**) on the body.

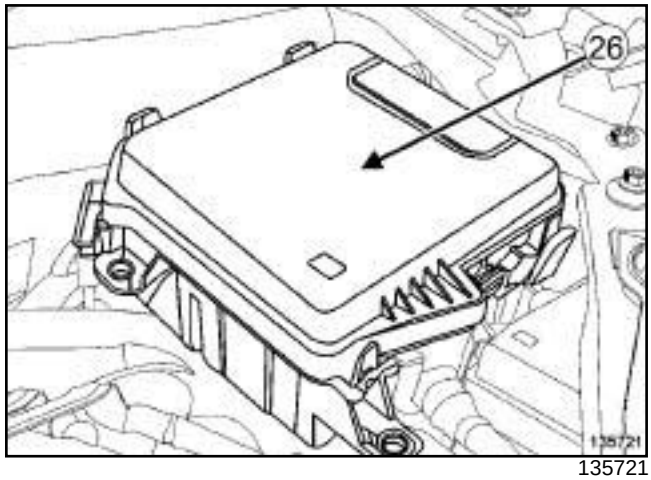

135721

❑ Remove the cover (**26**) from the Protection and Switching Unit.

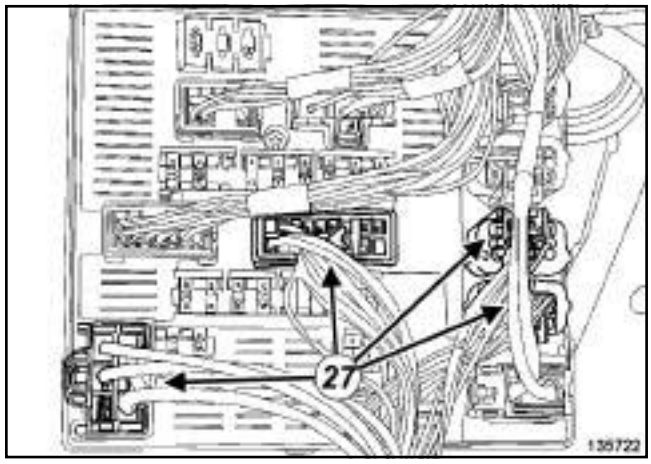

135722

❑ Disconnect the connectors (**27**) from the Protection and Switching Unit.

❑ Remove:

- the Protection and Switching Unit,

- the engine wiring.

F4R

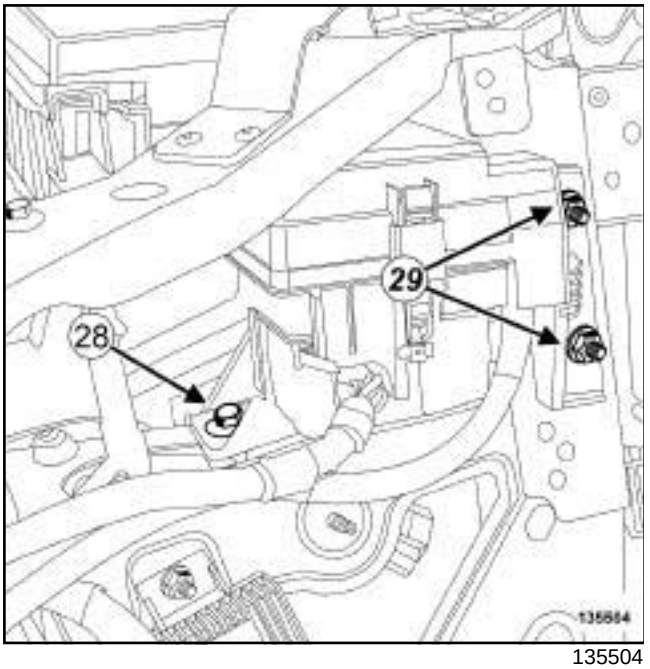

135504

❑ Remove:

- the bolts (**28**) from the engine fuse box,
- the nuts (**29**) from the engine fuse box.

❑ Move aside the engine fuse box.

❑ Remove the hydraulic clutch pipe (see **Clutch circuit: Removal - Refitting**) (37A, Mechanical component controls).

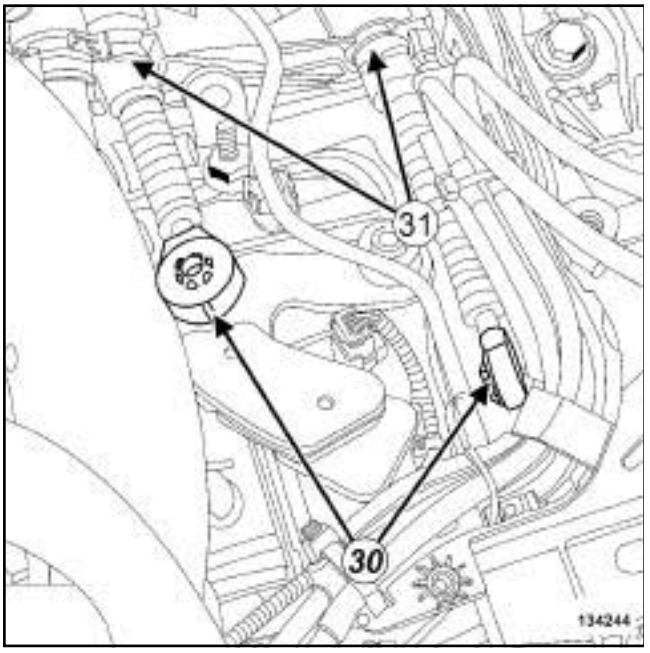

134244

❑ Unclip:

- the manual gearbox control cables from the selector ball joints (**30**) using an open-jawed spanner,
- the manual gearbox control cables from their support (**31**) .

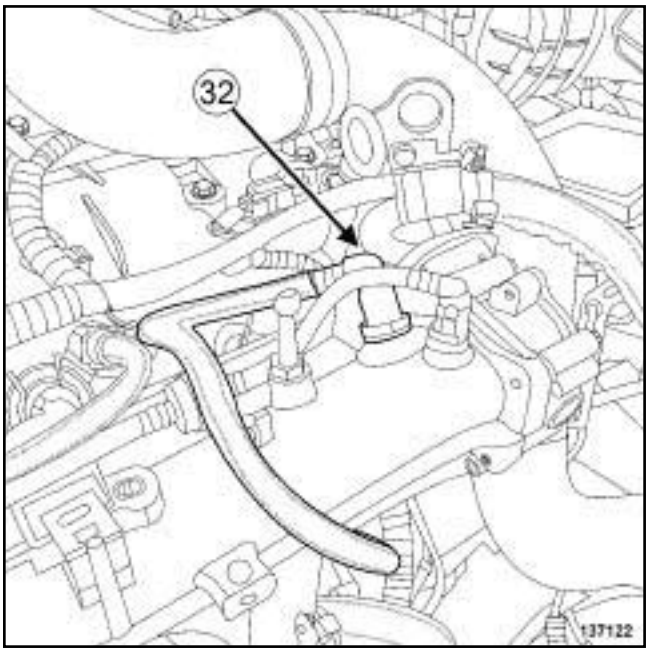

137122

❑ Unclip the vacuum pipe (**32**) from the brake servo.

❑ Move the brake servo vacuum pipe to one side.

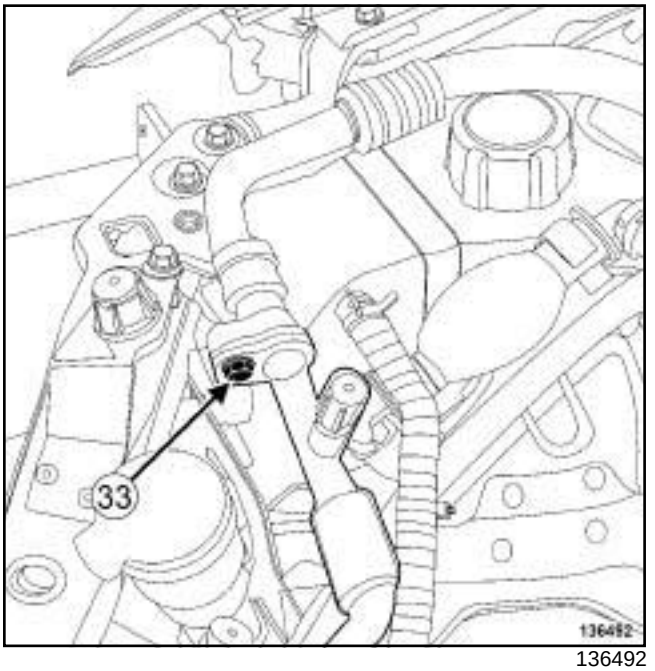

136492

❑ Remove the bolt (**33**) from the « intermediate pipe - compressor » connecting pipe.

❑ Uncouple the « intermediate pipe - compressor» connecting pipe from the intermediate pipe.

❑ Remove the seal from the « intermediate pipe - compressor » connecting pipe.

❑ Insert the blanking plugs.

F4R

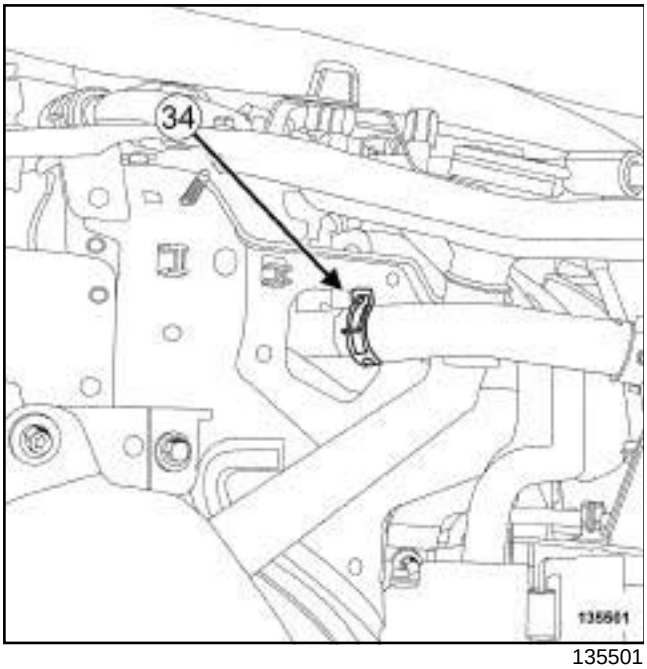

135501

- Separate the clip **(Mot. 1448)** of the expansion bottle bottom cooling hose using the tool (**34**) .
- Disconnect the bottom cooling hose from the expansion bottle.

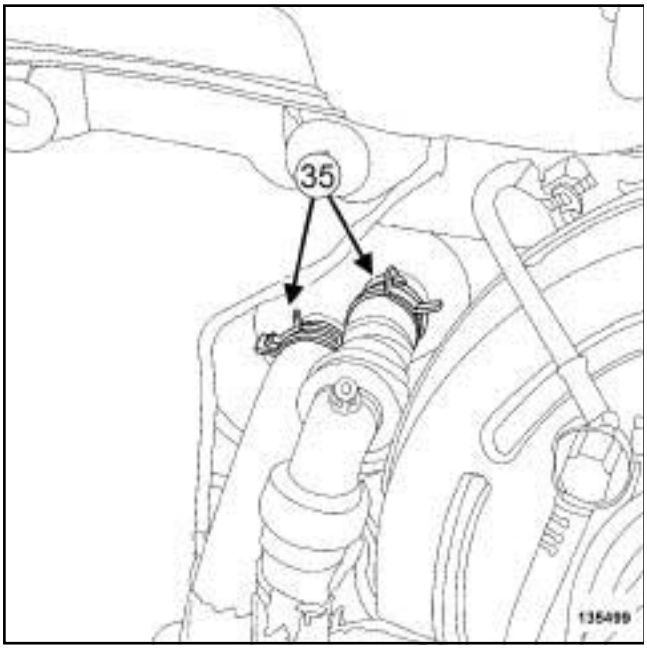

135499

- Separate the heater matrix hose clips (**35**) using the tool **(Mot. 1448)**.
- Disconnect the heater matrix hoses.

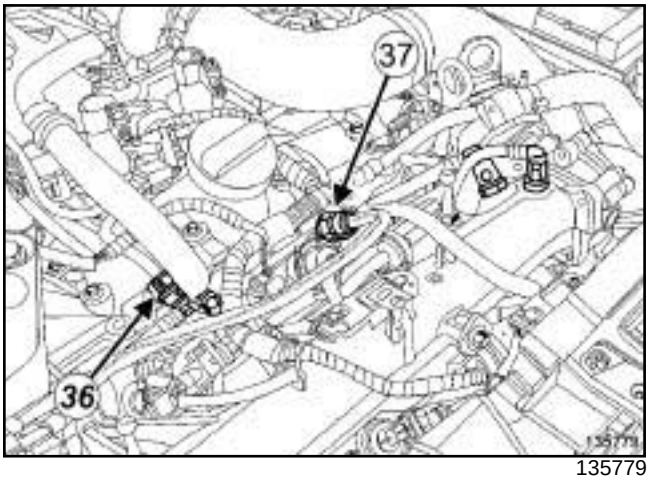

135779

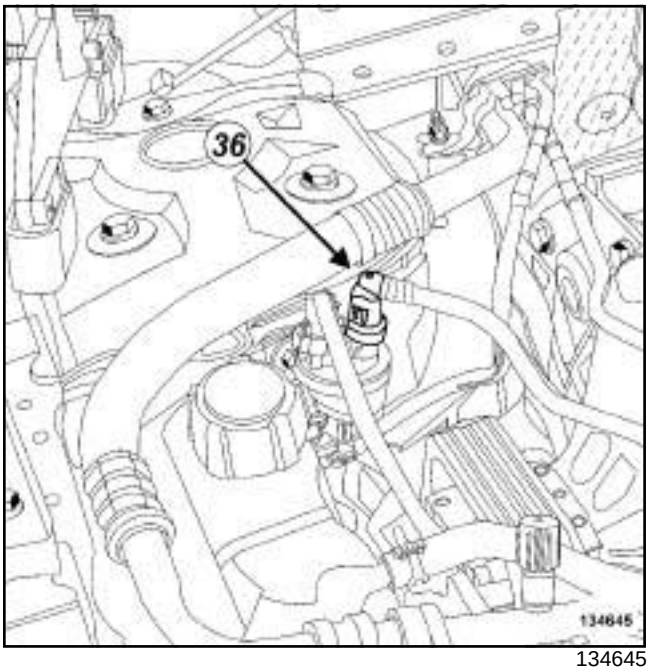

134645

- Disconnect the petrol vapour rebreathing pipe (**36**) .
- Remove the petrol vapour rebreathing pipe.
- Disconnect the fuel supply pipe (**37**) on the injector rail.
- Move aside the fuel supply pipe on the injector rail.
- Remove the radiator mounting cross member (see **Radiator support cross member: Removal - Refitting**) (31A, Front axle components).

F4R

II - OPERATION FOR REMOVAL OF PART CONCERNED

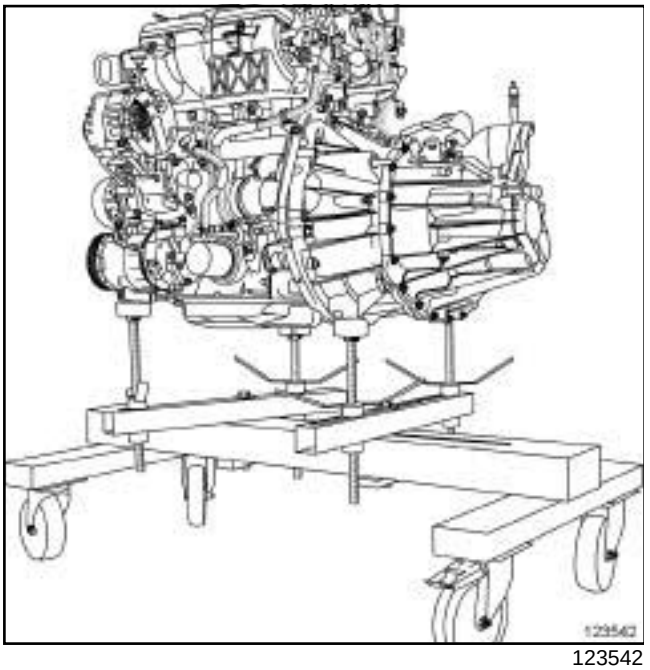

123542

- ❑ Mark the positions of the suspended engine mountings on the body.
- ❑ Position the tool **(Mot. 1390)** under the « engine - gearbox » assembly.
- ❑ Remove the right-hand suspended engine mounting (see **19D**, **Engine mounting**, **Right-hand suspended engine mounting: Removal - Refitting**, page **19D-18**) .

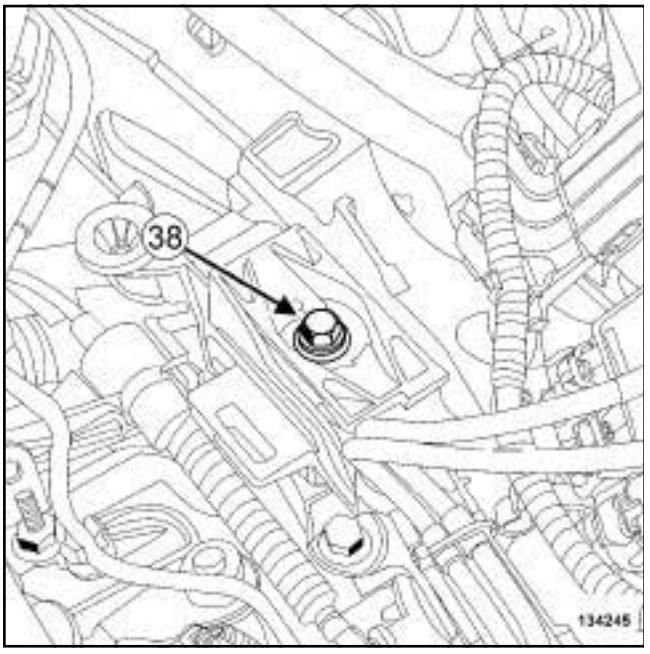

134245

- ❑ Remove the bolt (**38**) from the left-hand suspended engine mounting support on the gearbox.
- ❑ Detach the left-hand suspended engine mounting support on the gearbox from the left-hand suspended engine mounting rubber pad.
- ❑ Mark the position of the left-hand suspended engine mounting support on the body using a **indelible pencil**.
- ❑ Lift the vehicle to remove the « engine-gearbox » assembly.

> Note:
>
> Check that no component obstructs the movement of the body around the « engine - gearbox » assembly.

REFITTING

I - REFITTING PREPARATION OPERATION

- ❑ For standard engine replacements (see **Engine: Standard replacement**) (Technical Note 6027A, 10A, Engine and peripherals).
- ❑ **parts always to be replaced: refrigerant pipe seal (30,02,02,52)**.

II - REFITTING OPERATION FOR PART CONCERNED

- ❑ Position the « engine-gearbox » assembly in the vehicle.
- ❑ Position the support on the left-hand suspended engine mounting according to the marks made during removal.
- ❑ Refit the bolt of the left-hand suspended engine mounting support on the gearbox.
- ❑ Torque tighten the **bolt of the left-hand suspended engine mounting support on the gearbox (105 N.m)**.
- ❑ Refit:
  - the right-hand suspended engine mounting (see **19D**, **Engine mounting**, **Right-hand suspended engine mounting: Removal - Refitting**, page **19D-18**) ,
  - the radiator mounting cross member (see **Radiator support cross member: Removal - Refitting**) (31A, Front axle components).

III - FINAL OPERATION

- ❑ Connect:
  - the fuel supply pipe to the injector rail,

- the petrol vapour rebreathing pipe,
- the cooling hoses to the heater matrix,
- the expansion bottle bottom cooling hose.

❑ Fit:

- the heater matrix cooling hose clips using the tool **(Mot. 1448)**,
- the clip of the expansion bottle bottom cooling hose using the tool **(Mot. 1448)**.

> **WARNING**
> Do not remove the blanking plugs from each component until the last moment.
>
> Also, do not remove the components from their packaging until they are to be fitted to the vehicle.

> **WARNING**
> To avoid any leaks, check that the pipe surface is sound before positioning the new seal. The surface must be clean and scratch free.

❑ Remove the blanking plugs.

❑ Lubricate a new seal with the recommended air conditioning oil to make fitting easier (see **Air conditioning: Parts and consumables for the repair work**) (62A, Air conditioning).

❑ Fit a new seal on the «intermediate pipe - compressor » connecting pipe.

❑ Couple the « intermediate pipe - compressor » connecting pipe.

❑ Refit the bolt of the «intermediate pipe - compressor » connecting pipe.

❑ Torque tighten the **bolt of the connecting pipe between the « intermediate pipe - compressor» (8 N.m)**.

❑ Fit the brake servo vacuum pipe.

❑ Clip:

- brake servo vacuum pipe ,
- the control cables on the manual gearbox.

❑ Refit the hydraulic clutch pipe (see **Clutch circuit: Removal - Refitting**) (37A, Mechanical component controls).

❑ Fit:

- the engine fuse box,
- the engine wiring.

❑ Connect the Protection and Switching Unit connectors.

❑ Fit the protection and switching unit.

❑ Refit:

- the Protection and Switching Unit cover,
- the earth cable nut on the body.

❑ Torque tighten the **earth cable nut on the body (8 N.m)**.

❑ Refit the air resonator (see **12A**, **Fuel mixture**, **Air resonator: Removal - Refitting**, page **12A-1**) .

❑ Clip the power wiring channel onto the left-hand suspended engine mounting.

❑ Position the power cables.

❑ Refit the power cable nuts on the battery disconnection unit.

❑ Torque tighten the **power cable nuts on the battery disconnection unit (8 N.m)**.

❑ Clip on the wiring of the offset positive terminal.

❑ Connect the connectors of the battery disconnection unit.

❑ Refit the front end panel.

❑ Clip:

- the relay unit on the front end panel,
- the fan assembly wiring.

❑ Connect:

- the fan unit resistor connector,
- the motor-driven fan assembly connector.

❑ Refit:

- the lower bolts from the front end panel,
- the front end panel upper bolts,
- the front end panel clips,
- the bolts of the fan assembly wiring channel.

❑ Clip:

- the wiring to the front end panel,
- the expansion bottle top cooling hose to the front impact cross member.

❑ Connect:

- the radiator bottom cooling hose,
- the expansion bottle top cooling hose,
- the radiator top cooling hose.

F4R

- ❑ Fit the clip:
  - of the radiator bottom cooling hose using the tool **(Mot. 1448)**,
  - of the expansion bottle top cooling hose using the tool **(Mot. 1448)**,
  - of the radiator top cooling hose using the tool **(Mot. 1448)**.
- ❑ Connect the intercooler air inlet pipe.
- ❑ Clip the intercooler air inlet pipe.
- ❑ Connect the intercooler air outlet pipe.
- ❑ Clip on the intercooler air outlet pipe.
- ❑ Refit the bolt on the intercooler air outlet pipe.
- ❑ Remove the blanking plugs.
- ❑ Lubricate a new seal with the recommended air conditioning oil to make fitting easier (see **Air conditioning: Parts and consumables for the repair work**) (62A, Air conditioning).
- ❑ Fit a new seal on the « condenser - expansion valve » connecting pipe on the condenser side.
- ❑ Couple the « condenser - expansion valve » connecting pipe to the condenser.
- ❑ Refit the bolt of the « condenser - expansion valve » connecting pipe bracket on the condenser side.
- ❑ Torque tighten the **bolt of the connecting pipe between the « condenser - expansion valve » (8 N.m)**.
- ❑ Remove the blanking plugs.
- ❑ Lubricate a new seal with the recommended air conditioning oil to make fitting easier (see **Air conditioning: Parts and consumables for the repair work**) (62A, Air conditioning).
- ❑ Fit a new seal on the « compressor - condenser » connecting pipe on the condenser side.
- ❑ Couple the « compressor - condenser » connecting pipe on the condenser.
- ❑ Refit the bolt to the « compressor - condenser » connecting pipe bracket on the condenser side.
- ❑ Torque tighten the **bolt of the connecting pipe between the « compressor - condenser » (8 N.m)**.
- ❑ Refit the retaining bolt of the « compressor - condenser » connecting pipe
- ❑ Clip on the wiring of the refrigerant circuit pressure sensor.
- ❑ Connect the connector of the refrigerant circuit pressure sensor.
- ❑ Refit:
  - the bonnet catch (see **Bonnet latch: Removal - Refitting**) (52A, Non-side opening element mechanisms),
  - the front bumper mountings (see **Front bumper support: Removal - Refitting**) (42A, Front upper structure),
  - the headlights (see **Front headlight: Removal - Refitting**) (80B, Headlights),
  - the side air deflectors,
  - the upper air deflector,
  - the front impact cross member (see **Front impact cross member: Removal - Refitting**) (41A, Front lower structure),
  - the audible warning (see **Horn: Removal - Refitting**) (82B, Horn),
  - the connecting hose (see **19B**, **Exhaust**, **Connecting hose: Removal - Refitting**, page **19B-60**) ,
  - the lower engine tie-bar (see **19D**, **Engine mounting**, **Lower engine tie-bar: Removal - Refitting**, page **19D-33**) ,
  - new differential output seals (see **Differential output seal: Removal - Refitting**) (21A, Manual gearbox),
  - the front left-hand wheel driveshaft (see **Front left-hand wheel driveshaft: Removal - Refitting**) (29A, Driveshafts),
  - the front right-hand wheel driveshaft (see **Front right-hand wheel driveshaft: Removal - Refitting**) (29A, Driveshafts).
- ❑ Refill:
  - the engine oil (if necessary) (see **10A**, **Engine and cylinder block assembly**, **Engine oil: Draining - Refilling**, page **10A-40**) ,
  - the cooling circuit (see **Manual gearbox oil: Draining - Refilling**) ,
  - the manual gearbox (see **Manual gearbox oil: Draining - Refilling**) (21A, Manual gearbox),
  - the refrigerant circuit using a **refrigerant charging station** (62A, Air conditioning).
- ❑ Refit:
  - the front bumper (see **Front bumper: Removal - Refitting**) (55A, Exterior protection),
  - the front section of the front wheel arch liners (see **Front wheel arch liner: Removal - Refitting**) (55A, Exterior protection),

F4R

- the front wheels (see **Wheel: Removal - Refitting**) (35A, Wheels and tyres),
- the engine undertray,
- the air filter unit (see **12A**, **Fuel mixture**, **Air filter unit: Removal - Refitting**, page **12A-4**) ,
- the battery tray (see **Battery tray: Removal - Refitting**) (80A, Battery),
- the battery (see **Battery : Removal - Refitting**) (80A, Battery),
- the engine cover.

❑ Adjust the headlight beams (see **Front headlight: Adjusting**) (80B, Headlights).

K4M

Essential special tooling	
Mot. 1677	Flywheel locking tool.

Tightening torques ▽	
new flywheel bolts	**25 N.m + 50° ± 6°**
clip on the throttle valve air inlet pipe	**6 N.m**

REMOVAL

I - REMOVAL PREPARATION OPERATION

❑ Position the vehicle on a two-post lift (see **Vehicle: Towing and lifting**) (02A, Lifting equipment).

❑ Remove:

- the engine cover,
- the windscreen wiper arms (see **Windscreen wiper arm: Removal - Refitting**) (85A, Wiping - Washing),
- the scuttle panel grille (see **Scuttle panel grille: Removal - Refitting**) (56A, Exterior equipment),
- the scoop under the scuttle panel grille (see **Scoop under scuttle panel grille: Removal - Refitting**) (56A, Exterior equipment),
- the battery (see **Battery: Removal - Refitting**) (80A, Battery),
- the battery tray (see **Battery tray: Removal - Refitting**) (80A, Battery),
- the air filter unit (see **12A**, **Fuel mixture**, **Air filter unit: Removal - Refitting**, page **12A-4**) .

❑ Loosen the clip on the throttle valve air inlet pipe.

❑ Disconnect the air outlet pipe from the air filter unit.

❑ Remove:

- the air outlet pipe to the air filter unit,
- the front wheels (see **Wheel: Removal - Refitting**) (35A, Wheels and tyres),
- the front section of the front wheel arch liners (see **Front wheel arch liner: Removal - Refitting**) (55A, Exterior protection),
- the engine undertray bolts,
- the engine undertray,
- the front bumper (see **Front bumper: Removal - Refitting**) (55A, Exterior protection).

❑ Drain the manual gearbox (see **Manual gearbox oil: Draining - Refilling**) (21A, Manual gearbox).

❑ Remove:

- the starter (see **16A**, **Starting - Charging**, **Starter: Removal - Refitting**, page **16A-16**) ,
- the crankshaft position sensor (see **17B**, **Petrol injection**, **Crankshaft position sensor: Removal - Refitting**, page **17B-15**) ,
- the lower engine tie-bar (see **19D**, **Engine mounting**, **Lower engine tie-bar: Removal - Refitting**, page **19D-33**) ,
- the front right-hand wheel driveshaft (see **Front right-hand wheel driveshaft: Removal - Refitting**) (29A, Driveshafts),
- the front left-hand wheel driveshaft (see **Front left-hand wheel driveshaft: Removal - Refitting**) (29A, Driveshafts),
- the differential output seals (see **Differential output seal: Removal - Refitting**) (21A, Manual gearbox),
- the radiator mounting cross member (see **Radiator support cross member: Removal - Refitting**) (31A, Front axle components),
- the front axle subframe (see **Front axle sub-frame: Removal - Refitting**) (31A, Front axle components),
- the left-hand suspended engine mounting (see **19D**, **Engine mounting**, **Left-hand suspended engine mounting: Removal - Refitting**, page **19D-1**) ,
- the manual gearbox (see **Manual gearbox: Removal - Refitting**) (21A, Manual gearbox).
- the « pressure plate - disc » assembly (see **Mechanism / Disk: Removal - Refitting**) (20A, Clutch).

K4M

II - OPERATION FOR REMOVAL OF PART CONCERNED

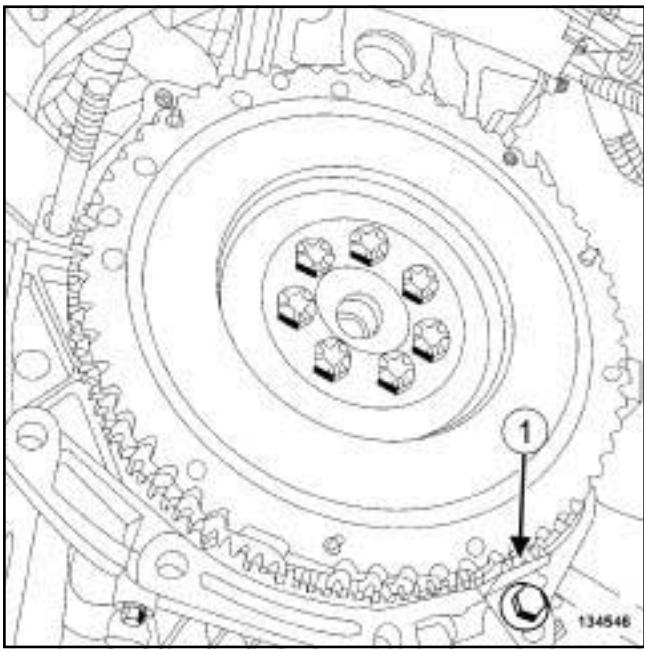

134546

- ❑ Lock the flywheel using tool **(Mot. 1677)** (**1**) .
- ❑ Remove:
  - the flywheel bolts,
  - the flywheel,
  - the **(Mot. 1677)**.

REFITTING

I - REFITTING PREPARATION OPERATION

- ❑ **parts always to be replaced: Flywheel bolts (10, 03,03,14)**.
- ❑ Use **SURFACE CLEANER** (see **Vehicle: Parts and ingredients for the repairwork**) (04B, Consumables - Products) to clean and degrease:
  - the flywheel bearing face if reusing,
  - the crankshaft bearing face.
- ❑ Check the condition of the flywheel and its seal.

II - REFITTING OPERATION FOR PART CONCERNED

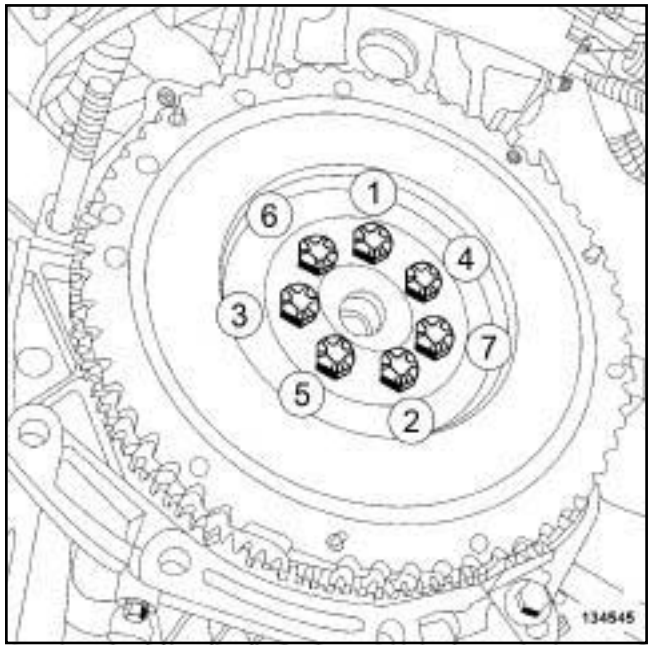

134545

- ❑ Position the flywheel equipped with new bolts.
- ❑ Fit the new bolts on the flywheel without tightening them.
- ❑ Position the **(Mot. 1677)**.
- ❑ Tighten to torque and in order the **new flywheel bolts (25 N.m + 50° ± 6°)**.
- ❑ Remove the **(Mot. 1677)**.

III - FINAL OPERATION

- ❑ Refit:
  - the « pressure plate - disc » assembly (see **Mechanism / Disk: Removal - Refitting**) (20A, Clutch),
  - the manual gearbox (see **Manual gearbox: Removal - Refitting**) (21A, Manual gearbox).
  - the left-hand suspended engine mounting (see **19D**, **Engine mounting**, **Left-hand suspended engine mounting: Removal - Refitting**, page **19D-1**) ,
  - the front axle subframe (see **Front axle sub-frame: Removal - Refitting**) (31A, Front axle components),
  - the radiator mounting cross member (see **Radiator support cross member: Removal - Refitting**) (31A, Front axle components),

K4M

- the new differential output seals (see **Differential output seal: Removal - Refitting**) (21A, Manual gearbox),
- the front right-hand wheel driveshaft (see **Front right-hand wheel driveshaft: Removal - Refitting**) (29A, Driveshafts),
- the front left-hand wheel driveshaft (see **Front left-hand wheel driveshaft: Removal - Refitting**) (29A, Driveshafts),
- the lower engine tie-bar (see **19D**, **Engine mounting**, **Lower engine tie-bar: Removal - Refitting**, page **19D-33**) ,
- the crankshaft position sensor (see **17B**, **Petrol injection**, **Crankshaft position sensor: Removal - Refitting**, page **17B-15**) ,
- the starter (see **16A**, **Starting - Charging**, **Starter: Removal - Refitting**, page **16A-16**) ,
- the front bumper (see **Front bumper: Removal - Refitting**) (55A, Exterior protection),
- the engine undertray,
- the front section of the front wheel arch liners (see **Front wheel arch liner: Removal - Refitting**) (55A, Exterior protection),
- the front wheels (see **Wheel: Removal - Refitting**) (35A, Wheels and tyres),
- the air filter unit (see **12A**, **Fuel mixture**, **Air filter unit: Removal - Refitting**, page **12A-4**) ,
- the air filter unit air outlet pipe.

❑ Connect the air outlet pipe of the air filter unit.

❑ Torque tighten the **clip on the throttle valve air inlet pipe (6 N.m)**.

❑ Refit:

- the battery tray (see **Battery tray: Removal - Refitting**) (80A, Battery),
- the battery (see **Battery: Removal - Refitting**) (80A, Battery),
- the scoop under the scuttle panel grille (see **Scoop under scuttle panel grille: Removal - Refitting**) (56A, Exterior equipment),
- the scuttle panel grille (see **Scuttle panel grille: Removal - Refitting**) (56A, Exterior equipment),
- the windscreen wiper arms (see **Windscreen wiper arm: Removal - Refitting**) (85A, Wiping - Washing).

❑ Perform the following operations:

- fill the manual gearbox with oil (see **Manual gearbox oil: Draining - Refilling**) (21A, Manual gearbox),
- bleed the clutch control circuit (see **Clutch circuit: Removal - Refitting**) (37A, Mechanical component controls).

❑ Refit the engine cover.

K9K

Essential special tooling	
Mot. 582	Flywheel locking tool.

Tightening torques ▽	
flywheel bolts	**20 N.m + 36° ± 6°**
flywheel bolts	**50 N.m**

IMPORTANT
Consult the safety and cleanliness advice and operation recommendations before carrying out any repair (see **Clutch: Precautions for repair**) .

REMOVAL

I - REMOVAL PREPARATION OPERATION

❑ Position the vehicle on a two-post lift (see **Vehicle: Towing and lifting**) (02A, Lifting equipment).

❑ Remove:

- the engine cover,
- the battery (see **Battery: Removal - Refitting**) (80A, Battery),
- the battery tray (see **Battery tray: Removal - Refitting**) (80A, Battery),
- the air filter unit (see **12A**, **Fuel mixture**, **Air filter unit: Removal - Refitting**, page **12A-4**) ,
- the engine undertray bolts,
- the engine undertray,
- the crankshaft position sensor (see **13B**, **Diesel injection**, **Crankshaft position sensor: Removal - Refitting**, page **13B-25**) ,
- the starter (see **16A**, **Starting - Charging**, **Starter: Removal - Refitting**, page **16A-16**) ,
- the front wheels (see **Wheel: Removal - Refitting**) (35A, Wheels and tyres),
- the front section of the front wheel arch liners (see **Front wheel arch liner: Removal - Refitting**) (55A, Exterior protection).

❑ Drain the gearbox (see **Manual gearbox oil: Draining - Refilling**) .

❑ Remove:

- the front left-hand wheel driveshaft (see **Front left-hand wheel driveshaft: Removal - Refitting**) (29A, Driveshafts),
- the front right-hand wheel driveshaft (see **Front right-hand wheel driveshaft: Removal - Refitting**) (29A, Driveshafts),
- the differential output seals (see **Differential output seal: Removal - Refitting**) (21A, Manual gearbox).

JR5

❑ Remove the lower engine tie-bar (see **19D**, **Engine mounting**, **Lower engine tie-bar: Removal - Refitting**, page **19D-33**) .

❑ Remove:

- the front bumper (see **Front bumper: Removal - Refitting**) (55A, Exterior protection),
- the radiator mounting cross member (see **Radiator support cross member: Removal - Refitting**) (31A, Front axle components),
- the front axle subframe (see **Front axle sub-frame: Removal - Refitting**) (31A, Front axle components),
- the windscreen wiper arms (see **Windscreen wiper arm: Removal - Refitting**) (85A, Wiping - Washing),
- the scuttle panel grille (see **Scuttle panel grille: Removal - Refitting**) (56A, Exterior equipment),
- the scoop under the scuttle panel grille (see **Scoop under scuttle panel grille: Removal - Refitting**) (56A, Exterior equipment),
- the left-hand suspended engine mounting (see **19D**, **Engine mounting**, **Left-hand suspended engine mounting: Removal - Refitting**, page **19D-1**) ,
- the manual gearbox (see **Manual gearbox: Removal - Refitting**) (21A, Manual gearbox).
- the hydraulic clutch release bearing (see **Clutch thrust bearing: Removal - Refitting**) (20A, Clutch),
- the clutch disc and pressure plate (see **Mechanism / Disk: Removal - Refitting**) (20A, Clutch).

K9K

II - OPERATION FOR REMOVAL OF PART CONCERNED

TL4

134218

❑ Lock the flywheel using tool **(Mot. 582)** (**1**) .

❑ Remove:

- the flywheel bolts (**2**) ,
- the flywheel,
- the **(Mot. 582)**.

JR5

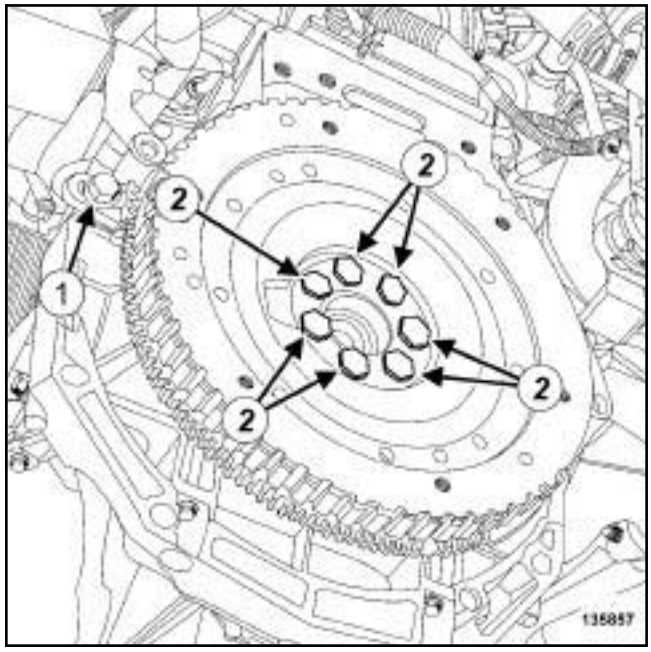

135857

❑ Lock the flywheel using tool **(Mot. 582)** (**1**) .

❑ Remove:

- the flywheel bolts (**2**) ,
- the flywheel,
- the **(Mot. 582)**.

REFITTING

I - REFITTING PREPARATION OPERATION

❑ Always replace:

- the flywheel bolts,
- the differential output seals.

❑ Clean the flywheel threads using **SURFACE CLEANER** (see **Vehicle: Parts and ingredients for the repairwork**) (04B, Consumables - Products).

❑ Degrease the flywheel bearing faces using **SURFACE CLEANER** (see **Vehicle: Parts and ingredients for the repairwork**) (04B, Consumables - Products).

K9K

II - REFITTING OPERATION FOR PART CONCERNED

❑ Refit:

- the flywheel,
- new flywheel bolts.
- the **(Mot. 582)**.

K9K, and TL4

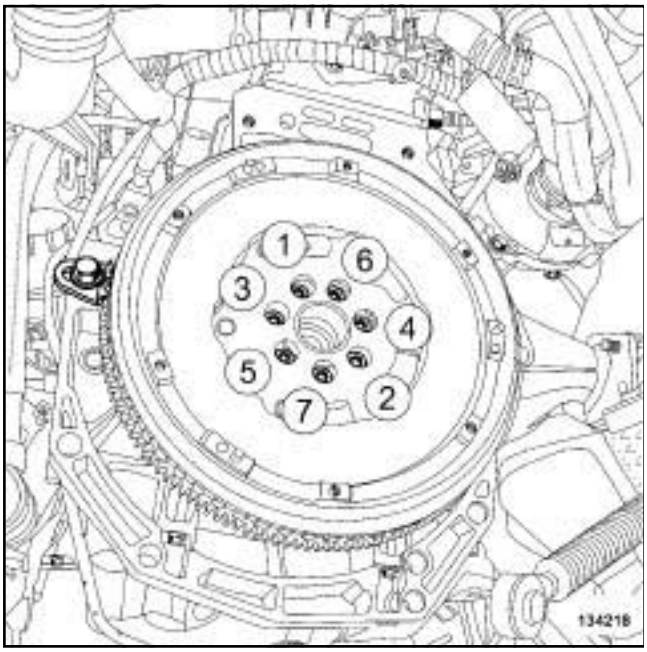

134218

❑ Tighten to torque and in order the **flywheel bolts (20 N.m + 36° ± 6°)**.

K9K, and JR5

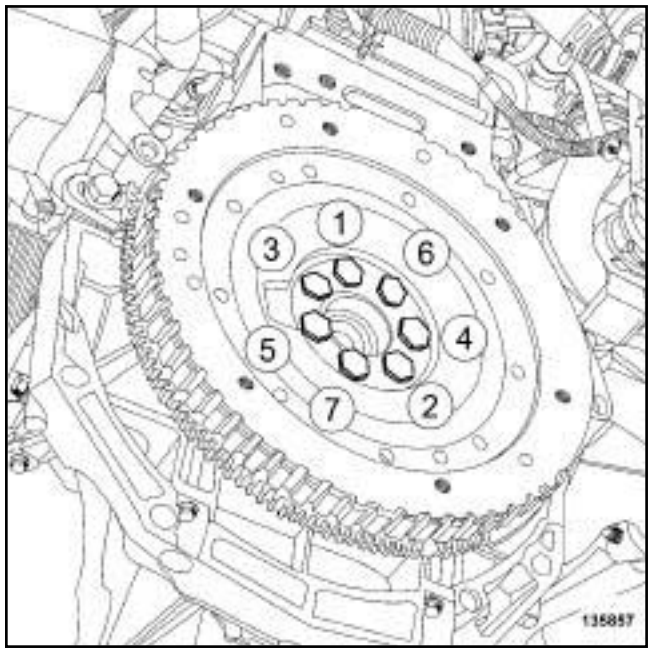

135857

❑ Tighten to torque and in order the **flywheel bolts (50 N.m)**.

III - FINAL OPERATION

❑ Refit:

- the clutch disc and pressure plate (see **Mechanism / Disk: Removal - Refitting**) (20A, Clutch),
- the hydraulic clutch release bearing (see **Clutch thrust bearing: Removal - Refitting**) (20A, Clutch),
- the manual gearbox (see **Manual gearbox: Removal - Refitting**) (21A, Manual gearbox).
- the left-hand suspended engine mounting (see **19D**, **Engine mounting**, **Left-hand suspended engine mounting: Removal - Refitting**, page **19D-1**) ,
- the scoop under the scuttle panel grille (see **Scoop under scuttle panel grille: Removal - Refitting**) (56A, Exterior equipment),
- the scuttle panel grille (see **Scuttle panel grille: Removal - Refitting**) (56A, Exterior equipment),
- the windscreen wiper arms (see **Windscreen wiper arm: Removal - Refitting**) (85A, Wiping - Washing),

K9K

- the front axle subframe (see **Front axle sub-frame: Removal - Refitting**) (31A, Front axle components),
- the radiator mounting cross member (see **Radiator support cross member: Removal - Refitting**) (31A, Front axle components),
- the front bumper (see **Front bumper: Removal - Refitting**) (55A, Exterior protection).

JR5

❑ Refit the lower engine tie-bar (see **19D**, **Engine mounting**, **Lower engine tie-bar: Removal - Refitting**, page **19D-33**) .

❑ Refit:

- the new differential output seals (see **Differential output seal: Removal - Refitting**) (21A, Manual gearbox),
- the front right-hand wheel driveshaft (see **Front right-hand wheel driveshaft: Removal - Refitting**) (29A, Driveshafts),
- the front left-hand wheel driveshaft (see **Front left-hand wheel driveshaft: Removal - Refitting**) (29A, Driveshafts).

❑ Fill the manual gearbox (see **Manual gearbox oil: Draining - Refilling**) (21A, Manual gearbox).

❑ Refit:

- the front section of the front wheel arch liners (see **Front wheel arch liner: Removal - Refitting**) (55A, Exterior protection),
- the front wheels (see **Wheel: Removal - Refitting**) (35A, Wheels and tyres),
- the starter (see **16A**, **Starting - Charging**, **Starter: Removal - Refitting**, page **16A-16**) ,
- the crankshaft position sensor (see **13B**, **Diesel injection**, **Crankshaft position sensor: Removal - Refitting**, page **13B-25**) .

❑ Bleed the clutch control circuit (see **Clutch circuit: Bleeding**) (37A, Mechanical component controls).

❑ Refit:

- the engine undertray,
- the air filter unit (see **12A**, **Fuel mixture**, **Air filter unit: Removal - Refitting**, page **12A-4**) ,
- the battery tray (see **Battery tray: Removal - Refitting**) (80A, Battery),
- the battery (see **Battery : Removal - Refitting**) (80A, Battery),
- the engine cover.

F9Q

Essential special tooling	
Mot. 1677	Flywheel locking tool.

Tightening torques ▽	
flywheel bolts	**30 N.m + 62°**

IMPORTANT
Consult the safety and cleanliness advice and operation recommendations before carrying out any repair (see **Clutch: Precautions for repair**) .

REMOVAL

I - REMOVAL PREPARATION OPERATION

❑ Position the vehicle on a two-post lift (see **Vehicle: Towing and lifting**) (02A, Lifting equipment).

❑ Remove:

- the engine cover,
- the engine undertray bolts,
- the engine undertray,
- the battery (see **Battery: Removal - Refitting**) (80A, Battery),
- the battery tray (see **Battery tray: Removal - Refitting**) (80A, Battery),
- the windscreen wiper arms (see **Windscreen wiper arm: Removal - Refitting**) (85A, Wiping - Washing),
- the scuttle panel grille (see **Scuttle panel grille: Removal - Refitting**) (56A, Exterior equipment),
- the scoop under the scuttle panel grille (see **Scoop under scuttle panel grille: Removal - Refitting**) (56A, Exterior equipment),
- the front wheels (see **Wheel: Removal - Refitting**) (35A, Wheels and tyres),
- the front wheel arch liners (see **Front wheel arch liner: Removal - Refitting**) (55A, Exterior protection),
- the starter (see **16A**, **Starting - Charging**, **Starter: Removal - Refitting**, page **16A-16**) .

❑ Drain the manual gearbox (see **Manual gearbox oil: Draining - Refilling**) (21A, Manual gearbox).

❑ Remove:

- the front left-hand wheel driveshaft (see **Front left-hand wheel driveshaft: Removal - Refitting**) (29A, Driveshafts),
- the front right-hand wheel driveshaft (see **Front right-hand wheel driveshaft: Removal - Refitting**) (29A, Driveshafts),
- the radiator mounting cross member (see **Radiator support cross member: Removal - Refitting**) (41A, Front lower structure),
- the front axle subframe (see **Front axle sub-frame: Removal - Refitting**) (31A, Front axle components),
- the left-hand suspended engine mounting (see **19D**, **Engine mounting**, **Left-hand suspended engine mounting: Removal - Refitting**, page **19D-1**) ,
- the manual gearbox (see **Manual gearbox: Removal - Refitting**) (21A, Manual gearbox),
- the « pressure plate - disc » assembly (see **Mechanism / Disk: Removal - Refitting**) (20A, Clutch).

II - OPERATION FOR REMOVAL OF PART CONCERNED

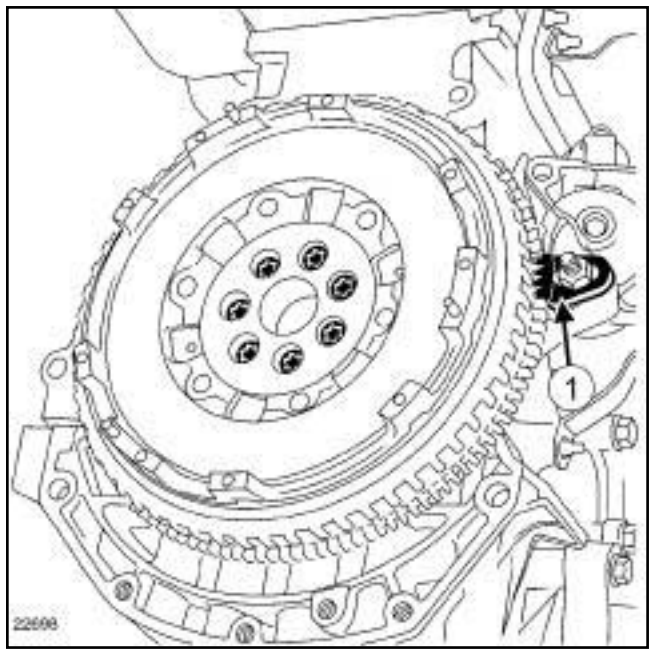

22698

❑ Remove:

- the flywheel bolts,
- the **(Mot. 1677)** (**1**) ,
- the flywheel.

F9Q

REFITTING

I - REFITTING PREPARATION OPERATION

❑ Use **SURFACE CLEANER** (see **Vehicle: Parts and ingredients for the repairwork**) (04B, Consumables - Products) to clean and degrease:

- the flywheel pressure face on the crankshaft,
- the flywheel threading on the crankshaft.

❑ **parts always to be replaced: Flywheel bolts (10, 03,03,14)**.

II - REFITTING OPERATION FOR PART CONCERNED

❑ Fit the flywheel.

❑ Screw in the new flywheel bolts without tightening them.

❑ Position the **(Mot. 1677)**.

❑ Torque and angle tighten the **flywheel bolts (30 N.m + 62°)**.

III - FINAL OPERATION

❑ Refit:

- the « pressure plate - disc » assembly (see **Mechanism / Disk: Removal - Refitting**) (21A, Manual gearbox),
- the manual gearbox (see **Manual gearbox: Removal - Refitting**) (20A, Clutch),
- the left-hand suspended engine mounting (see **19D**, **Engine mounting**, **Left-hand suspended engine mounting: Removal - Refitting**, page **19D-1**) ,
- the front axle subframe (see **Front axle sub-frame: Removal - Refitting**) (31A, Front axle components),
- the radiator mounting cross member (see **Radiator support cross member: Removal - Refitting**) (41A, Front lower structure).
- the front left-hand wheel driveshaft (see **Front left-hand wheel driveshaft: Removal - Refitting**) (29A, Driveshafts),
- the front right-hand wheel driveshaft (see **Front right-hand wheel driveshaft: Removal - Refitting**) (29A, Driveshafts),
- the starter (see **16A**, **Starting - Charging**, **Starter: Removal - Refitting**, page **16A-16**) ,
- the front wheel arch liners (see **Front wheel arch liner: Removal - Refitting**) (55A, Exterior protection),
- the front wheels (see **Wheel: Removal - Refitting**) (35A, Wheels and tyres),
- the scoop under the scuttle panel grille (see **Scoop under scuttle panel grille: Removal - Refitting**) (56A, Exterior equipment),
- the scuttle panel grille (see **Scuttle panel grille: Removal - Refitting**) (56A, Exterior equipment),
- the windscreen wiper arms (see **Windscreen wiper arm: Removal - Refitting**) (85A, Wiping - Washing),
- the battery tray (see **Battery tray: Removal - Refitting**) (80A, Battery),
- the battery (see **Battery : Removal - Refitting**) (80A, Battery),

❑ Fill the manual gearbox (see **Manual gearbox oil: Draining - Refilling**) (21A, Manual gearbox).

❑ Refit:

- the engine undertray,
- the engine cover.

F4R

Essential special tooling	
Mot. 1431	Flywheel locking tool.

Tightening torques ▽	
flywheel bolts	**30 N.m + 56° ± 6°**

REMOVAL

I - REMOVAL PREPARATION OPERATION

❑ Position the vehicle on a two-post lift (see **Vehicle: Towing and lifting**) (02A, Lifting equipment).

> **IMPORTANT**
> To prevent the vehicle from falling, lash it to the vehicle lift using a strap.

❑ Remove:

- the engine cover,
- the battery (see **Battery: Removal - Refitting**) (80A, Battery),
- the battery tray (see **Battery tray: Removal - Refitting**) (80A, Battery),
- the air filter unit (see **12A**, **Fuel mixture**, **Air filter unit: Removal - Refitting**, page **12A-4**) ,
- the front wheels (see **Wheel: Removal - Refitting**) (35A, Wheels and tyres),
- the engine undertray bolts,
- the engine undertray.

❑ Drain the manual gearbox (see **Manual gearbox oil: Draining - Refilling**) (21A, Manual gearbox).

❑ Remove:

- the front section of the front wheel arch liners (see **Front wheel arch liner: Removal - Refitting**) (55A, Exterior protection),
- the front bumper (see **Front bumper: Removal - Refitting**) (55A, Exterior protection),
- the radiator mounting cross member (see **Radiator support cross member: Removal - Refitting**) (31A, Front axle components),
- the front right-hand wheel driveshaft (see **Front right-hand wheel driveshaft: Removal - Refitting**) (29A, Driveshafts),
- the front left-hand wheel driveshaft (see **Front left-hand wheel driveshaft: Removal - Refitting**) (29A, Driveshafts),
- the differential output seals (see **Differential output seal: Removal - Refitting**) (21A, Manual gearbox),
- the lower engine tie-bar (see **19D**, **Engine mounting**, **Lower engine tie-bar: Removal - Refitting**, page **19D-33**) ,
- the front axle subframe (see **Front axle sub-frame: Removal - Refitting**) (31A, Front axle components),
- the starter (see **16A**, **Starting - Charging**, **Starter: Removal - Refitting**, page **16A-16**) ,
- the windscreen wiper arms (see **Windscreen wiper arm: Removal - Refitting**) (85A, Wiping - Washing),
- the scuttle panel grille (see **Scuttle panel grille: Removal - Refitting**) (56A, Exterior equipment),
- the scoop under the scuttle panel grille (see **Scoop under scuttle panel grille: Removal - Refitting**) (56A, Exterior equipment),
- the left-hand suspended engine mounting (see **19D**, **Engine mounting**, **Left-hand suspended engine mounting: Removal - Refitting**, page **19D-1**) ,
- the manual gearbox (see **Manual gearbox: Removal - Refitting**) (21A, Manual gearbox),
- the pressure plate - disc assembly (see **Mechanism / Disk: Removal - Refitting**) (20A, Clutch).

F4R

II - OPERATION FOR REMOVAL OF PART CONCERNED

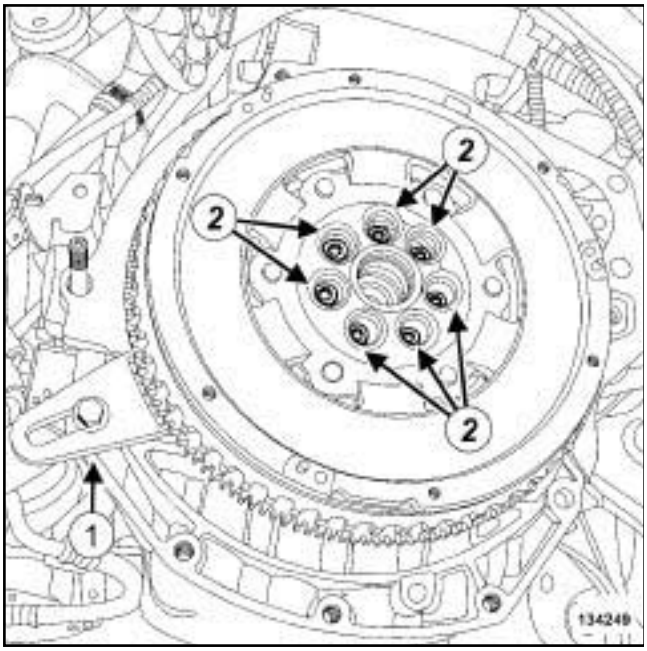

134249

❑ Lock the flywheel using tool **(Mot. 1431)** (**1**) .

❑ Remove:

- the flywheel bolts (**2**) ,
- the **(Mot. 1431)**,
- the flywheel.

REFITTING

I - REFITTING PREPARATION OPERATION

❑ **parts always to be replaced: Flywheel bolts (10, 03,03,14)**.

❑ Use **SURFACE CLEANER** (see **Vehicle: Parts and ingredients for the repairwork**) (04B, Consumables - Products) to clean and degrease:

- the flywheel bearing faces if reusing,
- the bearing faces of the crankshaft.

II - REFITTING OPERATION FOR PART CONCERNED

❑ Refit:

- the flywheel,
- new flywheel bolts.

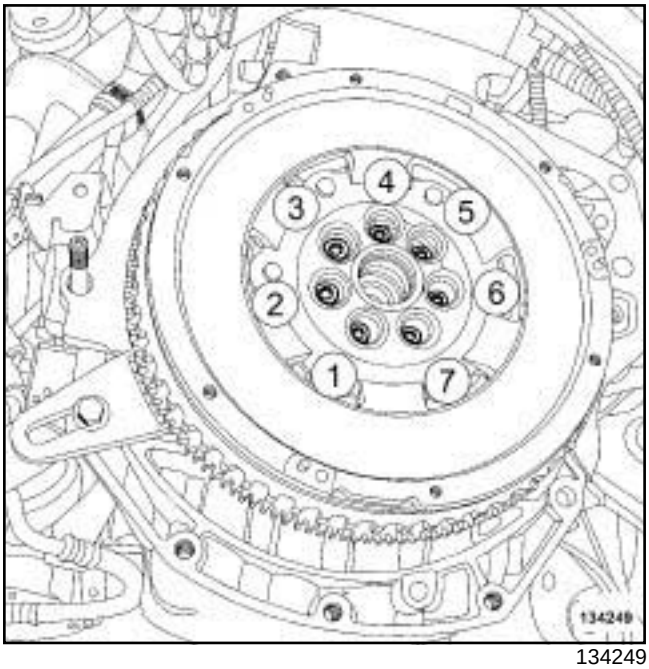

134249

❑ Position the **(Mot. 1431)**.

❑ Torque tighten in order the **flywheel bolts (30 N.m + 56° ± 6°)**.

III - FINAL OPERATION

❑ Refit:

- the pressure plate - disc assembly (see **Mechanism / Disk: Removal - Refitting**) (20A, Clutch),
- the manual gearbox (see **Manual gearbox: Removal - Refitting**) (21A, Manual gearbox),
- the left-hand suspended engine mounting (see **19D**, **Engine mounting**, **Left-hand suspended engine mounting: Removal - Refitting**, page **19D-1**) ,
- the scoop under the scuttle panel grille (see **Scoop under scuttle panel grille: Removal - Refitting**) (56A, Exterior equipment),
- the scuttle panel grille (see **Scuttle panel grille: Removal - Refitting**) (56A, Exterior equipment),
- the windscreen wiper arms (see **Windscreen wiper arm: Removal - Refitting**) (85A, Wiping - Washing),
- the starter (see **16A**, **Starting - Charging**, **Starter: Removal - Refitting**, page **16A-16**) ,
- the new differential output seals (see **Differential output seal: Removal - Refitting**) (21A, Manual gearbox),

- the front axle subframe (see **Front axle sub-frame: Removal - Refitting**) (31A, Front axle components),
- the lower engine tie-bar (see **19D**, **Engine mounting**, **Lower engine tie-bar: Removal - Refitting**, page **19D-33**) ,
- the front left-hand wheel driveshaft (see **Front left-hand wheel driveshaft: Removal - Refitting**) (29A, Driveshafts),
- the front right-hand wheel driveshaft (see **Front right-hand wheel driveshaft: Removal - Refitting**) (29A, Driveshafts),
- the radiator mounting cross member (see **Radiator support cross member: Removal - Refitting**) (31A, Front axle components),
- the front bumper (see **Front bumper: Removal - Refitting**) (55A, Exterior protection),
- the front section of the front wheel arch liners (see **Front wheel arch liner: Removal - Refitting**) (55A, Exterior protection),

❑ Fill the manual gearbox (see **Manual gearbox oil: Draining - Refilling**) (21A, Manual gearbox).

❑ Refit:

- the engine undertray,
- the front wheels (see **Wheel: Removal - Refitting**) (35A, Wheels and tyres),
- the air filter unit (see **12A**, **Fuel mixture**, **Air filter unit: Removal - Refitting**, page **12A-4**) ,
- the battery tray (see **Battery tray: Removal - Refitting**) (80A, Battery),
- the battery (see **Battery : Removal - Refitting**) (80A, Battery),
- the engine cover.

K4M

Essential equipment
petrol compression gauge
diagnostic tool

CHECKING

I - PREPARATION OPERATION FOR CHECK

❑ Remove

- the engine cover,
- the ignition coils (see **17A**, **Ignition**, **Coils Removal - Refitting**, page **17A-1**) ,
- the spark plugs (see **17A**, **Ignition**, **Spark plugs: Removal - Refitting**, page **17A-5**) .

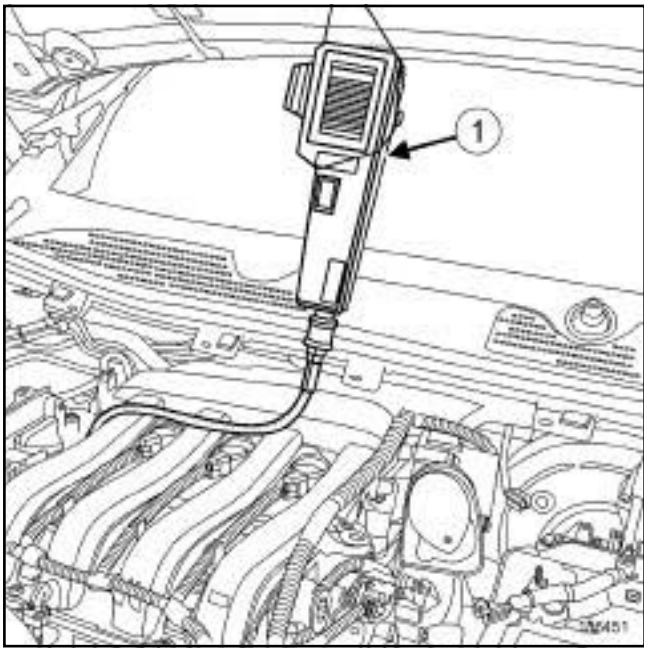

136451

❑ Connect a **petrol compression gauge** (**1**) .

❑ Run command with **diagnostic tool** :

- **RZ003 : "ADAPTATIFS MOTEUR"**,
- **VP036 : "INHIBITION ALIMENTATION CARBURANT"**.

❑ Put the vehicle under starting conditions:

- gear lever in neutral position for manual gearbox,
- brake pedal depressed.

II - TEST OPERATION

❑ Press the vehicle start button to trigger the engine starting phase.

> Note:
>
> The engine will be driven by the starter for **20 seconds**, without being started.

❑ Measure the compression of cylinder no.1.

❑ Fully depress the accelerator pedal in order to open the throttle valve during the compression measurements.

> Note:
>
> Put the vehicle under forced + after ignition feed as soon as the starter has stopped (in order to maintain the inhibition of the engine starting and to be able to measure the compression of the other cylinders).

> Note:
>
> It is necessary to wait for at least **10 seconds** before starting the engine each time (the starter will not run due to its thermal protection).

❑ Measure the compression of the other cylinders.

III - FINAL OPERATION

❑ Disconnect the **petrol compression gauge**.

❑ Refit:

- the spark plugs (see **17A**, **Ignition**, **Spark plugs: Removal - Refitting**, page **17A-5**) ,
- the ignition coils (see **17A**, **Ignition**, **Coils Removal - Refitting**, page **17A-1**) ,
- the engine cover.

❑ Remove the card from the reader to interrupt the + after ignition feed and wait for the loss of communication message to appear on the **diagnostic tool**.

> Note:
>
> If the message does not appear, wait **9 minutes**.

❑ When the loss of communication message appears or after waiting **9 minutes**, force the vehicle's + after ignition feed.

K9K

Essential special tooling	
Mot. 1592	Compression pressure test end piece-hose.

Essential equipment
diesel compression gauge
self-contained starter
diagnostic tool

CHECKING

I - PREPARATION OPERATION FOR CHECK

❑ Remove the preheater plugs (see **13C**, **Preheating**, **Heater plugs Removal - Refitting**, page **13C-3**) .

K9K, and 832

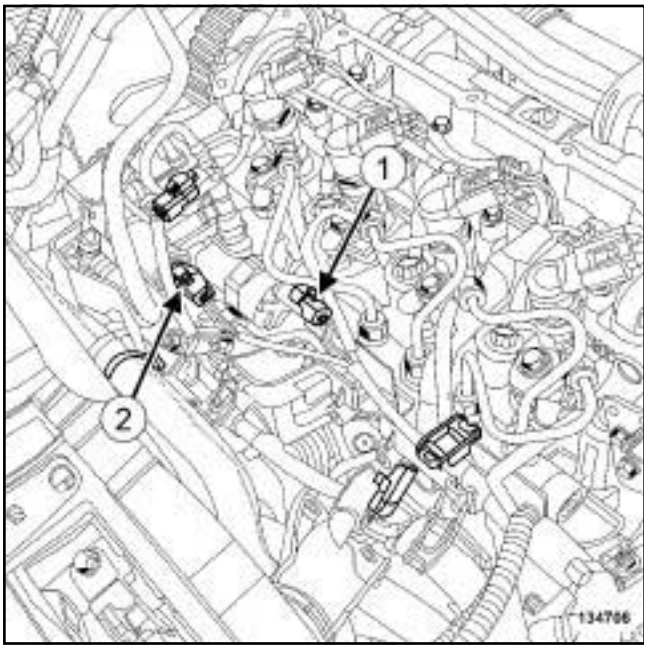

134706

❑ Disconnect:

- the connector (**1**) from the fuel pressure regulation solenoid valve,
- the connector (**2**) from the fuel flow regulating solenoid valve.

K9K, and 830

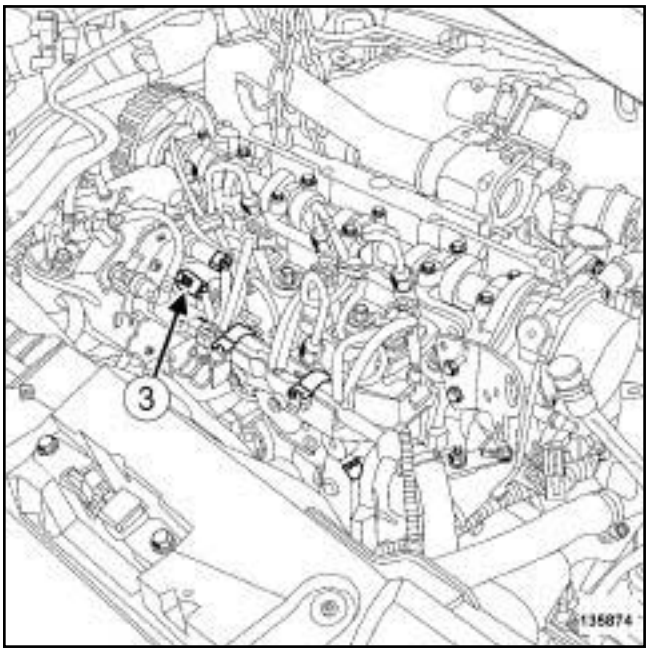

135874

❑ Disconnect the connector (**3**) from the fuel pressure regulation solenoid valve.

II - TEST OPERATION

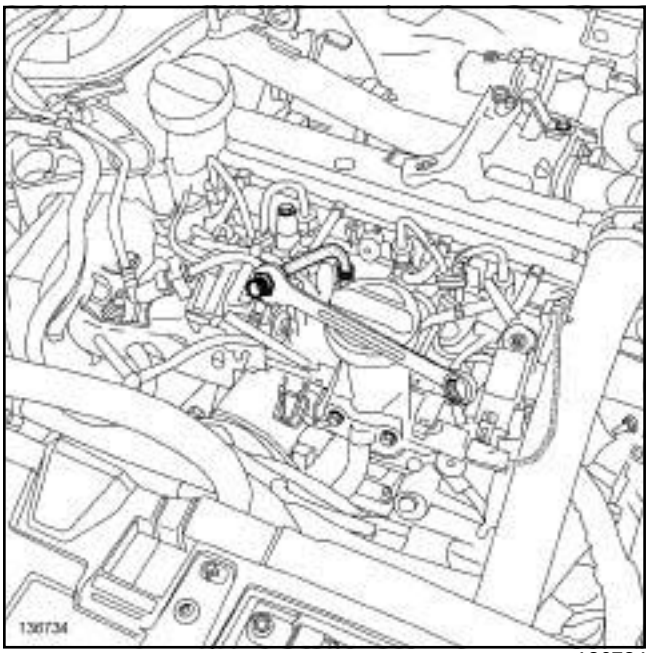

136734

❑ Use an open-jawed spanner to moderately tighten:

- the hose end piece **(Mot. 1592)**,

K9K

- the adapter of the **diesel compression gauge** on the **(Mot. 1592)**.

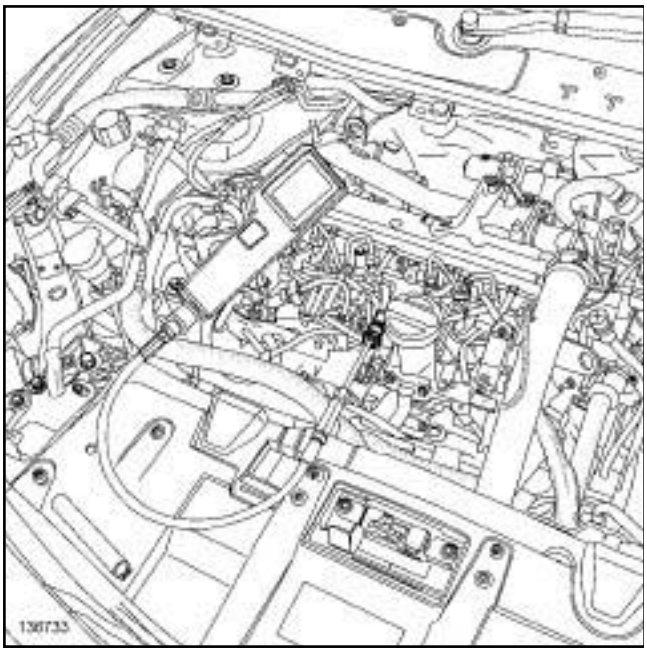

136733

❑ Moderately tighten the unions of the **diesel compression gauge** using an open-jawed spanner.

❑ Connect the **self-contained starter**.

❑ Force the vehicle's + after ignition feed.

❑ Connect the **diagnostic tool**.

❑ Run commands:

- RZ009 "Program vehicle functions",
- VP036 "Inhibit fuel supply".

❑ Operate the starter for **15 seconds** until the needle of the **diesel compression gauge** stabilises to obtain the maximum value.

❑ Make progress with the diagram sheet.

❑ Carry out the same procedure for the other cylinders.

❑ Check that the cylinder compression values are all approximately equal.

> Note:
>
> The pressure value after compression must be at least **18 bar**.

❑ Run command VP037 "Stop fuel supply inhibition".

❑ Disconnect:

- the **diagnostic tool**,
- the **self-contained starter**.

❑ Undo:

- the **diesel compression gauge** on the hose end piece **(Mot. 1592)**,
- the flexible end piece **(Mot. 1592)** using an open-jawed spanner.

❑ Remove the flexible end piece **(Mot. 1592)** which was fitted in place of one of the removed plugs.

III - FINAL OPERATION

❑ Connect the connector to the fuel flow regulation solenoid valve.

K9K, and 832

❑ Connect the connector to the fuel pressure regulation solenoid valve.

❑ Refit the heater plugs (see **13C**, **Preheating**, **Heater plugs Removal - Refitting**, page **13C-3**) .

F4R

Essential equipment
petrol compression gauge
diagnostic tool

CHECKING

I - PREPARATION OPERATION FOR CHECK

❑ Remove:

- the engine cover,
- the ignition coils (see **17A**, **Ignition**, **Coils Removal - Refitting**, page **17A-1**) ,
- the spark plugs (see **17A**, **Ignition**, **Spark plugs: Removal - Refitting**, page **17A-5**) .

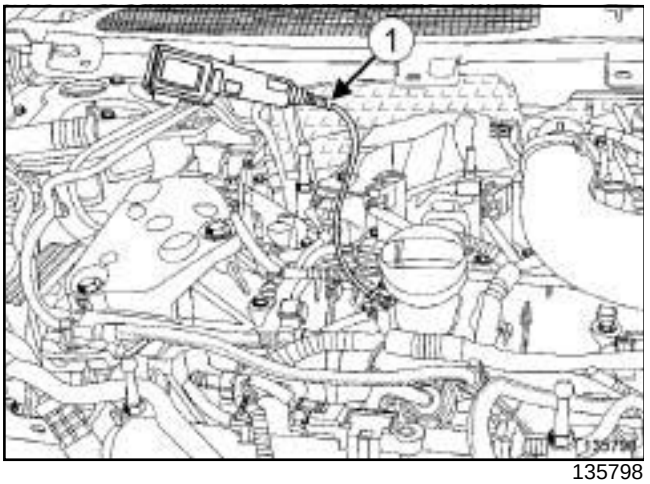

135798

❑ Connect a **petrol compression gauge** (**1**) .

❑ Run commands using the **diagnostic tool** :

- **RZ003 « ADAPTATIF MOTEUR »** ,
- **VP036 «INHIBITION ALIMENTATION CARBURANT »** .

❑ Put the vehicle under starting conditions:

- gear lever in neutral for manual gearbox or position P (Park) for automatic gearbox,
- brake pedal depressed.

II - TEST OPERATION

❑ Press the vehicle start button to trigger the engine starting phase.

> Note:
>
> the engine will be driven by the starter for **20 seconds**, without being started.

❑ Measure the compression of cylinder n°1.

❑ Fully depress the accelerator pedal in order to open the throttle valve during the compression measurements.

> Note:
>
> Put the vehicle back in forced + after ignition feed as soon as the starter has stopped (in order to maintain the inhibition of the engine starting and to be able to measure the compression of the other cylinders).

> Note:
>
> It is necessary to wait for at least **10 seconds** before starting the engine each time (the starter will not run due to its thermal protection).

❑ Measure the compression of the other cylinders.

III - FINAL OPERATION

❑ Disconnect the **petrol compression gauge**.

❑ Refit:

- the spark plugs (see **17A**, **Ignition**, **Spark plugs: Removal - Refitting**, page **17A-5**) ,
- the ignition coils (see **17A**, **Ignition**, **Coils Removal - Refitting**, page **17A-1**) ,
- the engine cover.

❑ Remove the card from the reader to interrupt the + after ignition feed and wait for the loss of communication message to appear on the **diagnostic tool**,

> Note:
>
> If the message does not appear, wait **9 minutes**.

❑ When the loss of communication message appears or after waiting **9 minutes**, force the vehicle's + after ignition feed.

F9Q

Essential special tooling	
Mot. 1592	Compression pressure test end piece-hose.

Essential equipment
diesel compression gauge
self-contained starter
diagnostic tool

CHECKING

I - PREPARATION OPERATION FOR CHECK

❑ Remove:

- the engine cover,
- the injector rail protector (see **13B**, **Diesel injection**, **Injector rail protector: Removal - Refitting**, page **13B-70**) ,
- the heater plugs (see **13C**, **Preheating**, **Heater plugs Removal - Refitting**, page **13C-3**) .

❑ Fit the hose end piece **(Mot. 1592)** in place of the heater plug on the cylinder to be checked.

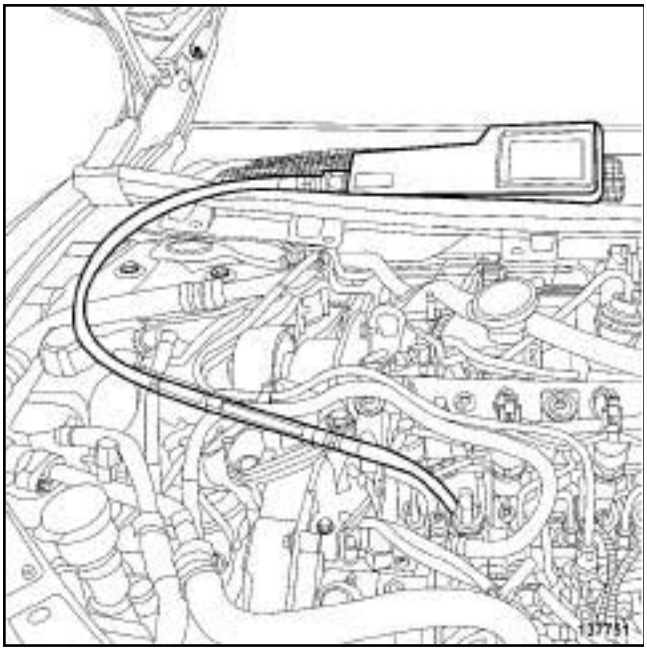

137751

❑ Use an open-jawed spanner to moderately tighten:

- the hose end piece **(Mot. 1592)**,
- the **diesel compression gauge**.

❑ Connect a **self-contained starter**.

❑ Force the vehicle's + after ignition feed.

❑ Connect the **diagnostic tool**.

❑ Run commands:

- **RZ009: "VEHICLE FUNCTION PROGRAMMING"**,
- **VP036: "INHIBIT FUEL SUPPLY"**.

II - TEST OPERATION

❑ Run the starter.

> Note:
>
> The engine will be driven by the starter for **20 seconds**, without being started.

❑ Proceed through the diagram sheet.

> Note:
>
> Put the vehicle under forced + after ignition feed as soon as the starter has been stopped (in order to maintain the inhibition of the engine starting and to be able to measure the compression of the other cylinders).

> Note:
>
> It is necessary to wait for at least **10 seconds** before starting the engine each time (the starter will not run due to its thermal protection).

❑ Carry out the same procedure for the other cylinders.

III - FINAL OPERATION

❑ Remove:

- the **diesel compression gauge**,
- the hose end piece **(Mot. 1592)**.

❑ Refit:

- the heater plugs (see **13C**, **Preheating**, **Heater plugs Removal - Refitting**, page **13C-3**) ,
- the injector rail protector (see **13B**, **Diesel injection**, **Injector rail protector: Removal - Refitting**, page **13B-70**) ,
- the engine cover.

F9Q

- Remove the card from the reader to interrupt the + after ignition feed and wait for the loss of communication message to appear on the **diagnostic tool**.

> Note:
>
> If the message does not appear, wait **9 minutes**.

- When the loss of communication message appears or after waiting **9 minutes**, force the vehicle's + after ignition feed.

K4M

Tightening torques ▽	
tensioning roller bolt	**40 N.m**

IMPORTANT
Wear protective gloves during the operation.

WARNING
Do not run the engine without the accessories belt to avoid damaging the crankshaft accessories pulley.

REMOVAL

I - REMOVAL PREPARATION OPERATION

❑ Position the vehicle on a two-post lift (see **Vehicle: Towing and lifting**) (02A, Lifting equipment).

❑ Remove:

- the front right-hand wheel (see **Wheel: Removal - Refitting**) (35A, Wheels and tyres),
- the front section of the front right-hand wheel arch liner (see **Front wheel arch liner: Removal - Refitting**) (55A, Exterior protection).

II - OPERATION FOR REMOVAL OF PART CONCERNED

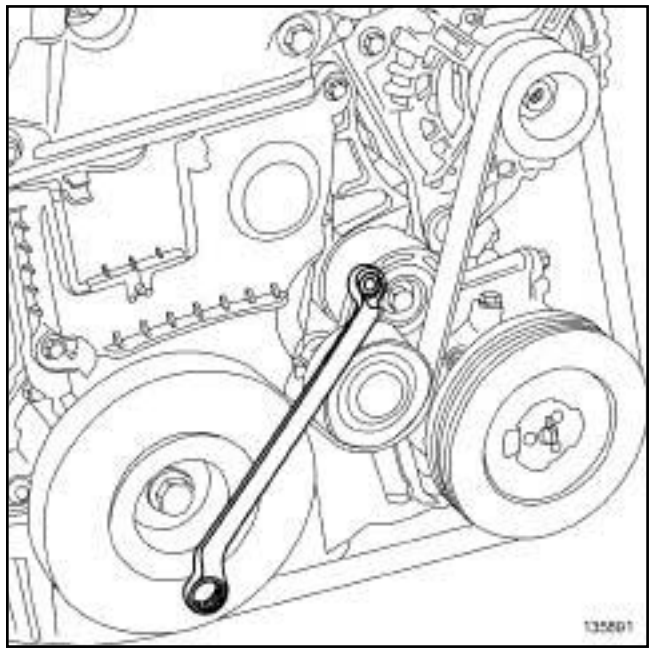

135891

❑ Turn the accessories belt auto tensioner clockwise using a **16 mm** spanner.

❑ Lock the tensioning roller using a **6 mm** Allen key.

❑ Remove the accessories belt.

Note:
Before removing the tensioning roller, always retrieve the **6 mm** Allen key.

❑ Remove:

- the tensioning roller bolt,
- the tensioning roller.

REFITTING

I - REFITTING PREPARATION OPERATION

❑ **parts always to be replaced: Accessories belt (10,10,01,03)**.

❑ **parts always to be replaced: Accessories belt tensioning roller (10,10,01,04)**.

❑ Use a brush to remove any deposits from the crankshaft pulley V-grooves.

II - REFITTING OPERATION FOR PART CONCERNED

❑ Refit a new tensioning roller.

K4M

- ❑ Tighten to torque the **tensioning roller bolt (40 N.m)**.
- ❑ Turn the accessories belt tensioning roller clockwise using a **16 mm** spanner.
- ❑ Lock the tensioning roller using a **6 mm** Allen key.
- ❑ Refit a new accessories belt.
- ❑ Retrieve the **6 mm** Allen key and gradually release the tensioning roller using a **16 mm** spanner.
- ❑ Rotate the crankshaft clockwise twice to balance the accessories belt tension on every pulley.

III - FINAL OPERATION

- ❑ Refit:
  - the front section of the front right-hand wheel arch liner (see **Front wheel arch liner: Removal - Refitting**) (55A, Exterior protection),
  - the front right-hand wheel (see **Wheel: Removal - Refitting**) (35A, Wheels and tyres).

K9K

Essential equipment
offset spanner

Tightening torques ▽	
new accessories belt tensioning roller bolt	**40 N.m**

IMPORTANT

Wear protective gloves during the operation.

WARNING

Do not run the engine without the accessories belt to avoid damaging the crankshaft accessories pulley.

REMOVAL

I - REMOVAL PREPARATION OPERATION

❑ Position the vehicle on a two-post lift (see **Vehicle: Towing and lifting**) (02A, Lifting equipment).

❑ Remove:

- the front right-hand wheel (see **Wheel: Removal - Refitting**) (35A, Wheels and tyres),
- the front section of the front right-hand wheel arch liner (see **Front wheel arch liner: Removal - Refitting**) (55A, Exterior protection),
- the engine undertray bolts,
- the engine undertray.

II - OPERATION FOR REMOVAL OF PART CONCERNED

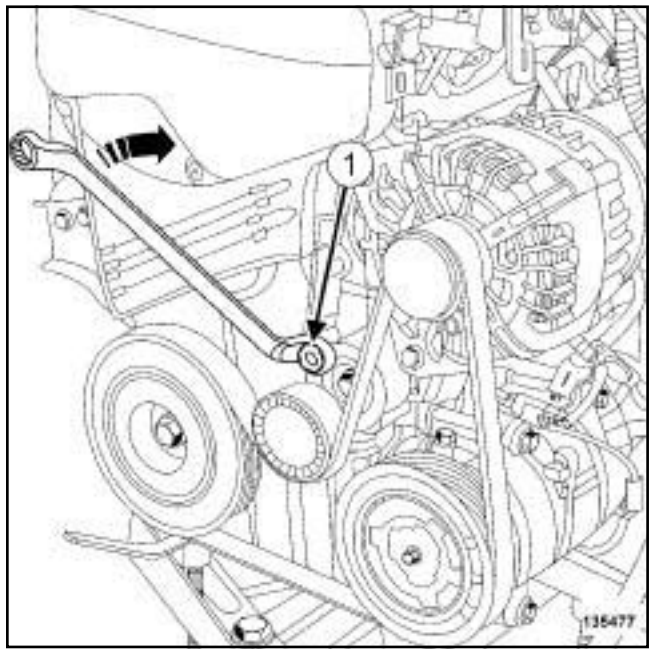

135477

❑ Turn the accessories belt tensioning roller clockwise at (**1**) using a **16 mm offset spanner**.

❑ Remove the accessories belt.

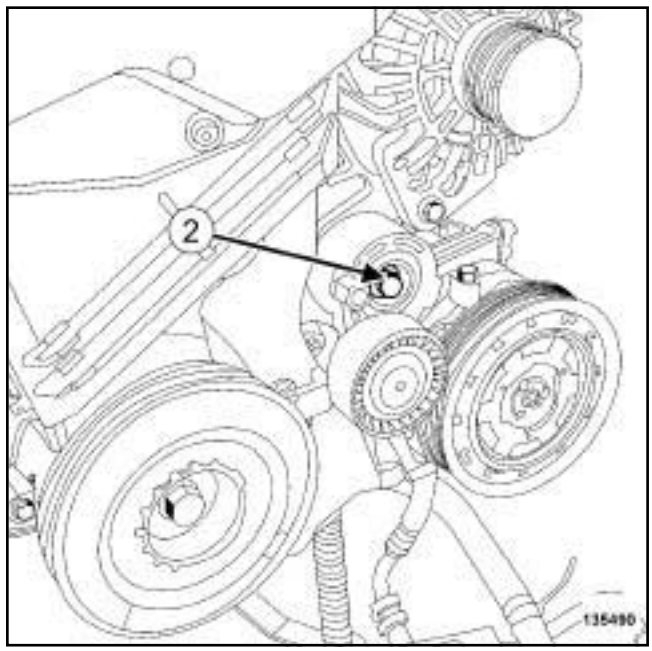

135490

❑ Remove:

- the accessories belt tensioning roller bolt (**2**) ,
- the accessories belt tensioning roller.

K9K

REFITTING

I - REFITTING PREPARATION OPERATION

❑

> **WARNING**
> Only use brushes with plastic or non-corrosive metal (brass) bristles.

❑ Use a brush to remove any deposits from the crankshaft accessories pulley V grooves.

❑ **parts always to be replaced: Accessories belt (10,10,01,03)**.

❑ **parts always to be replaced: Accessories belt tensioning roller (10,10,01,04)**.

❑ **parts always to be replaced: Accessories tensioning roller bolt (10,10,01,09)**.

II - REFITTING OPERATION FOR PART CONCERNED

❑ Refit a new accessories belt tensioning roller.

❑ Torque tighten the **new accessories belt tensioning roller bolt (40 N.m)**.

❑ Refit a new accessories belt.

❑ Rotate the crankshaft clockwise through two revolutions (timing end).

III - FINAL OPERATION

❑ Refit:

- the engine undertray,
- the front section of the front right-hand wheel arch liner (see **Front wheel arch liner: Removal - Refitting**) (55A, Exterior protection),
- the front right-hand wheel (see **Wheel: Removal - Refitting**) (35A, Wheels and tyres).

F4R

Tightening torques ▽	
accessories belt tensioning roller bolt	**50 N.m**

WARNING
Do not run the engine without the accessories belt to avoid damaging the crankshaft accessories pulley.

IMPORTANT
Wear protective gloves during the operation.

REMOVAL

I - REMOVAL PREPARATION OPERATION

❑ Position the vehicle on a two-post lift (see **Vehicle: Towing and lifting**) (02A, Lifting equipment).

❑ Remove:

- the front right-hand wheel (see **Wheel: Removal - Refitting**) (35A, Wheels and tyres),
- the front section of the front right-hand wheel arch liner (see **Front wheel arch liner: Removal - Refitting**) (55A, Exterior protection),
- the engine undertray bolts,
- the engine undertray.

II - OPERATION FOR REMOVAL OF PART CONCERNED

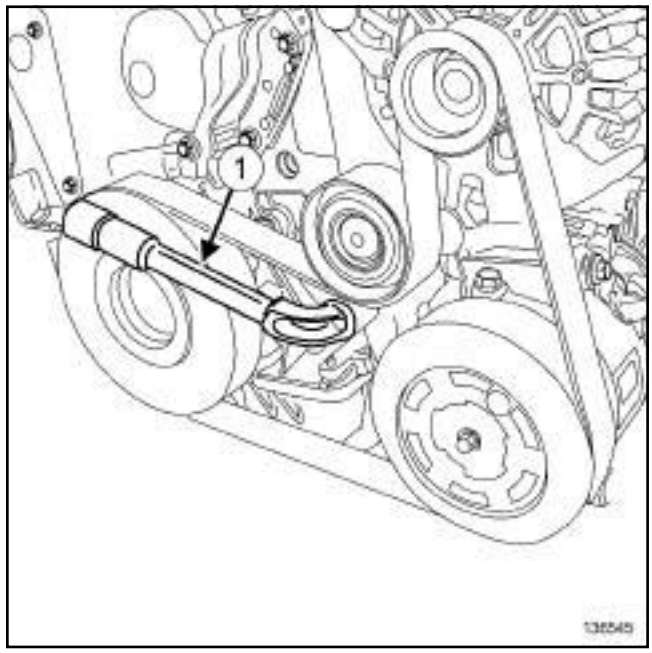

136545

❑ Turn the accessories belt tensioning roller clockwise at (**1**) using a **16 mm** spanner.

❑ Remove the accessories belt.

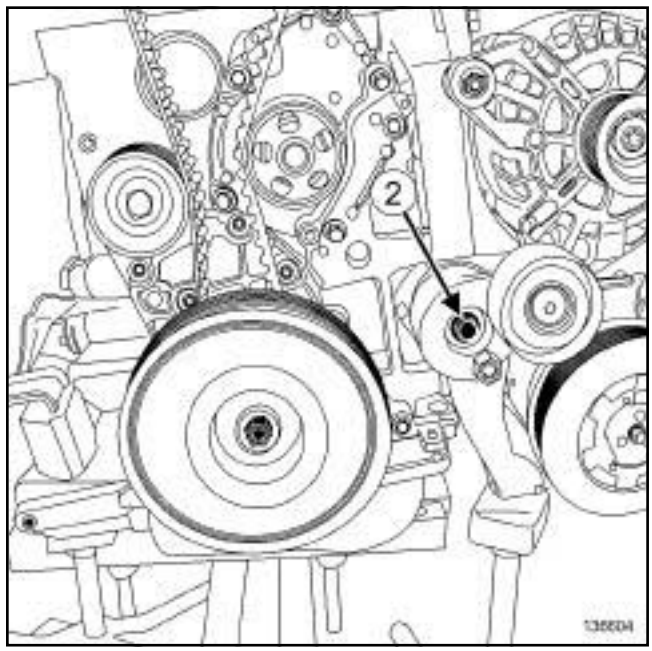

136604

❑ Remove:

- the accessories belt tensioning roller bolt (**2**) ,
- the accessories belt tensioning roller.

F4R

REFITTING

I - REFITTING PREPARATION OPERATION

❑ **parts always to be replaced: Accessories belt (10,10,01,03)**.

❑ **parts always to be replaced: Accessories belt tensioning roller (10,10,01,04)**.

> **WARNING**
> Only use brushes with plastic or non-corrosive metal (brass) bristles.

❑ Use a brush to remove any deposits from the crankshaft accessories pulley V-grooves.

II - REFITTING OPERATION FOR PARTS CONCERNED

❑ Refit:

- a new accessories belt tensioning roller,
- a new accessories belt tensioning roller bolt.

❑ Torque tighten the **accessories belt tensioning roller bolt (50 N.m)**.

❑ Turn the accessories belt tensioning roller clockwise using a **16 mm** spanner.

❑ Refit a new accessories belt.

❑ Rotate the crankshaft clockwise twice to balance the accessories belt tension on every pulley.

III - FINAL OPERATION

❑ Refit:

- the engine undertray,
- the front section of the front right-hand wheel arch liner (see **Front wheel arch liner: Removal - Refitting**) (55A, Exterior protection),
- the front right-hand wheel (see **Wheel: Removal - Refitting**) (35A, Wheels and tyres).

F9Q

Tightening torques ▽	
accessories belt tensioning roller bolt	**50 N.m**

WARNING
Do not run the engine without the accessories belt to avoid damaging the crankshaft accessories pulley.

REMOVAL

I - REMOVAL PREPARATION OPERATION

❑ Position the vehicle on a two-post lift (see **Vehicle: Towing and lifting**) (02A, Lifting equipment).

❑ Remove:

- the engine undertray bolts,
- the engine undertray,
- the front right-hand wheel (see **Wheel: Removal - Refitting**) (35A, Wheels and tyres),
- the front right-hand wheel arch liner (see **Front wheel arch liner: Removal - Refitting**) (55A, Exterior protection).

II - OPERATION FOR REMOVAL OF PART CONCERNED

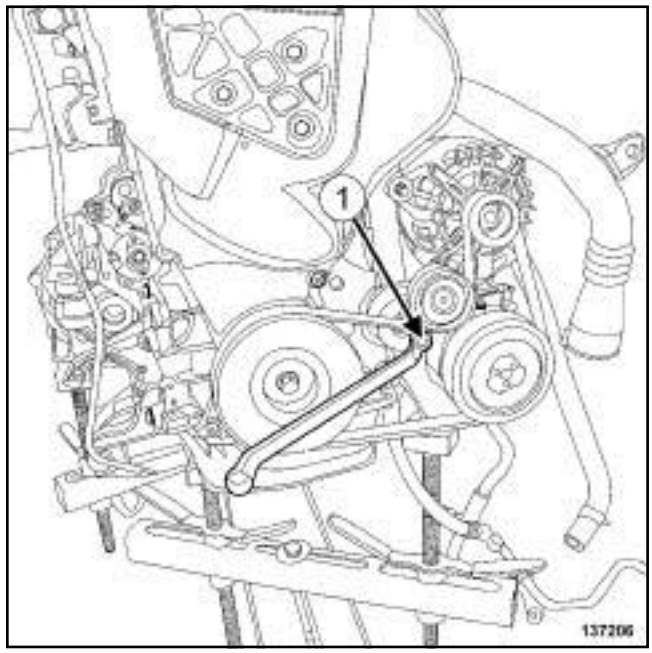

137206

❑ Turn the accessories belt tensioning roller (**1**) clockwise.

❑ Remove the accessories belt.

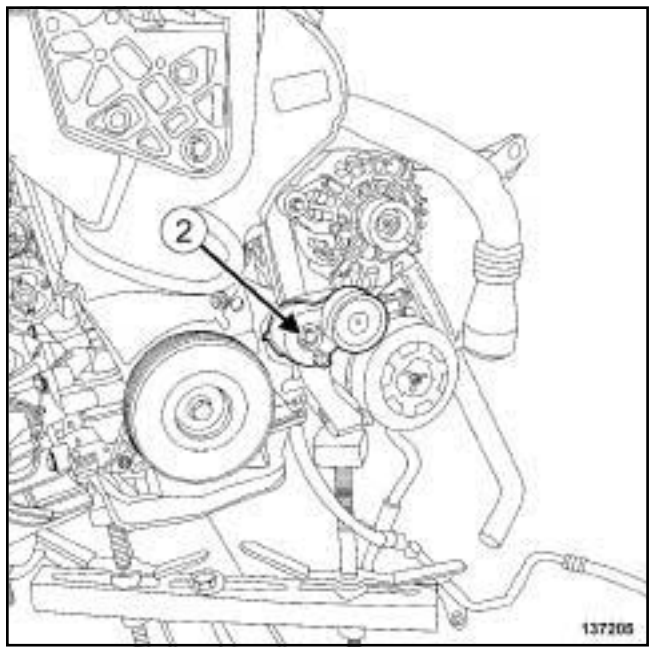

137205

❑ Remove:

- the accessories belt tensioning roller bolt (**2**) ,
- the accessories belt tensioning roller.

F9Q

REFITTING

I - REFITTING PREPARATION OPERATION

❏

> **WARNING**
> Only use brushes with plastic or non-corrosive metal (brass) bristles.

❏ Clean the V-grooves of the crankshaft accessories pulley.

❏ **parts always to be replaced: Accessories belt (10,10,01,03)**,

parts always to be replaced: Accessories belt tensioning roller (10,10,01,04).

II - REFITTING OPERATION FOR PART CONCERNED

❏ Refit the new accessories belt tensioning roller.

❏ Torque tighten the **accessories belt tensioning roller bolt (50 N.m)**.

❏ Refit the accessories belt.

❏ Turn the crankshaft twice.

III - FINAL OPERATION

❏ Refit:

- the front right-hand wheel arch liner (see **Front wheel arch liner: Removal - Refitting**) (55A, Exterior protection),
- the front right-hand wheel (see **Wheel: Removal - Refitting**) (35A, Exterior protection),
- the engine undertray.

K9K

Essential special tooling	
Mot. 1489	TDC locating pin.

Tightening torques ▽	
crankshaft accessories pulley bolt	**120 N.m + 95° ± 15°**
TDC pin plug	**23 N.m**

WARNING
Do not run the engine without the accessories belt to avoid damaging the crankshaft accessories pulley.

IMPORTANT
Wear protective gloves during the operation.

REMOVAL

I - REMOVAL PREPARATION OPERATION

❑ Position the vehicle on a two-post lift (see **Vehicle: Towing and lifting**) (02A, Lifting equipment).

❑ Remove:

- the engine cover,
- the front right-hand wheel (see **Wheel: Removal - Refitting**) (35A, Wheels and tyres),
- the front section of the front right-hand wheel arch liner (see **Front wheel arch liner: Removal - Refitting**) (55A, Exterior protection),
- the engine undertray bolts,
- the engine undertray,
- the accessories belt (see **11A**, **Top and front of engine**, **Accessories belt: Removal - Refitting**, page **11A-7**) .

II - OPERATION FOR REMOVAL OF PART CONCERNED

K9K, and 832

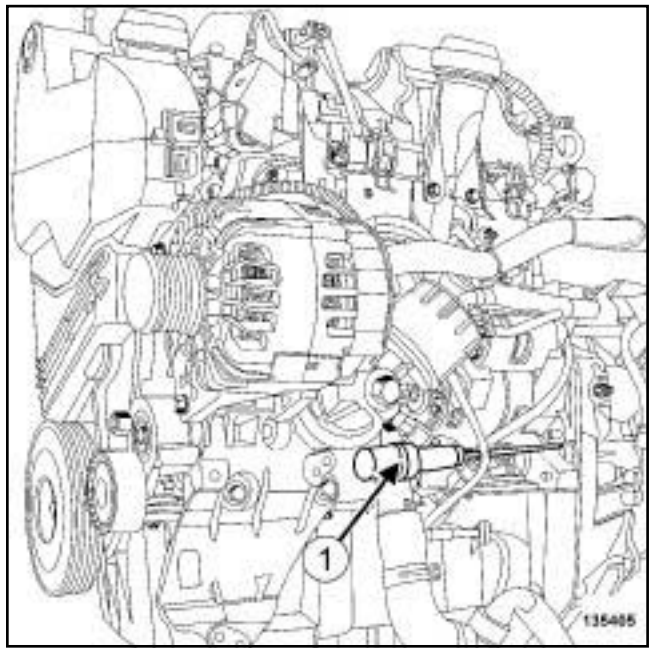

135405

❑ Lock the flywheel using a screwdriver (**1**) .

K9K

K9K, and 830 or 834

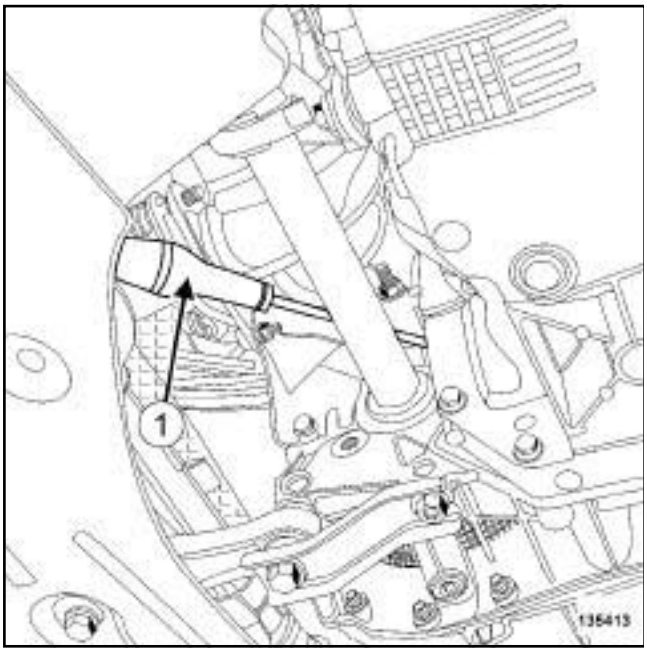

135413

❑ Lock the flywheel using a screwdriver (**1**) .

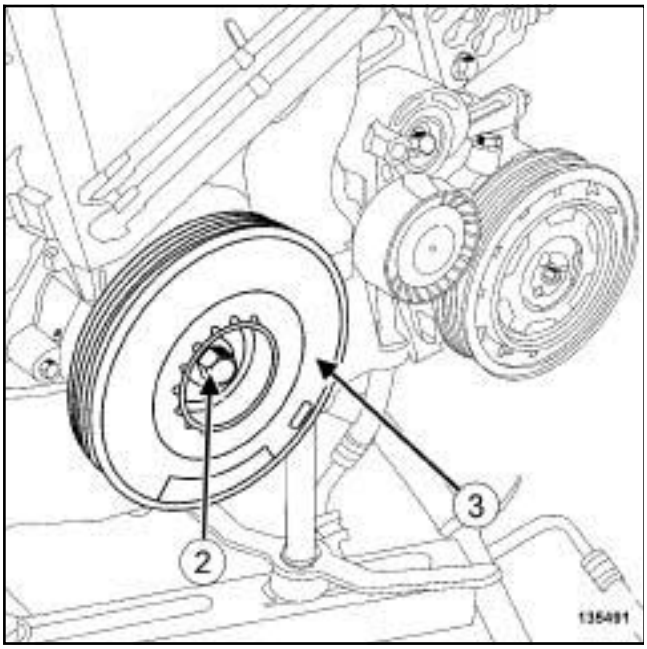

135491

❑ Remove:

- the crankshaft accessories pulley bolt (**2**) ,
- the crankshaft accessories pulley (**3**) .

REFITTING

I - REFITTING PREPARATION OPERATION

❑ **parts always to be replaced: Crankshaft accessories pulley bolts (10,03,03,10)**.

> **WARNING**
> Only use brushes with plastic or non-corrosive metal (brass) bristles.

❑ If reusing the crankshaft accessories pulley, clean the crankshaft accessories pulley V-grooves with a brush to eliminate any deposits.

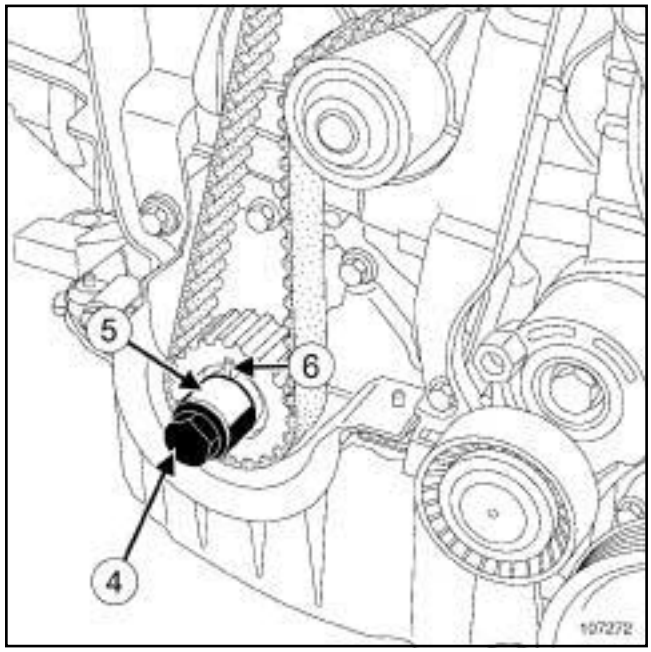

107272

❑ Refit the old crankshaft accessories pulley bolt (**4**) with a spacer (**5**) .

❑ Turn the crankshaft clockwise (timing end) using the old bolt of the crankshaft accessories pulley, until the collet of the crankshaft timing pinion (**6**) is almost vertical and facing upwards.

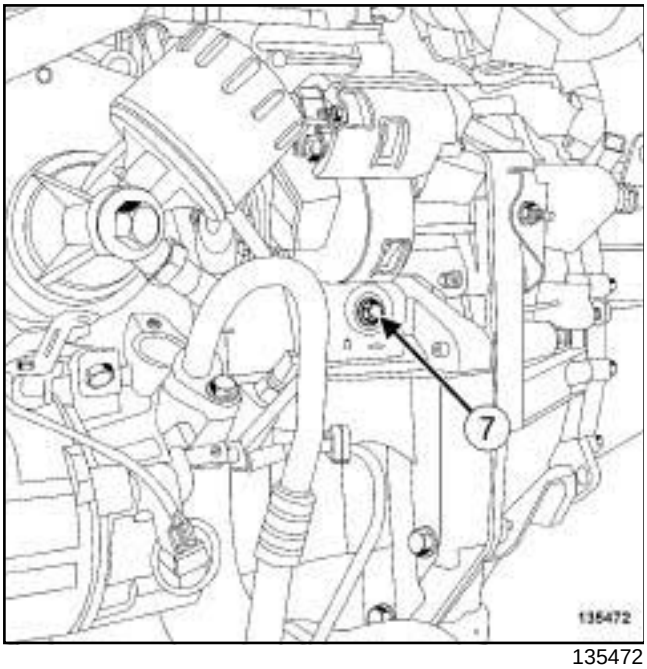

135472

❑ Remove the TDC setting pin plug (**7**) .

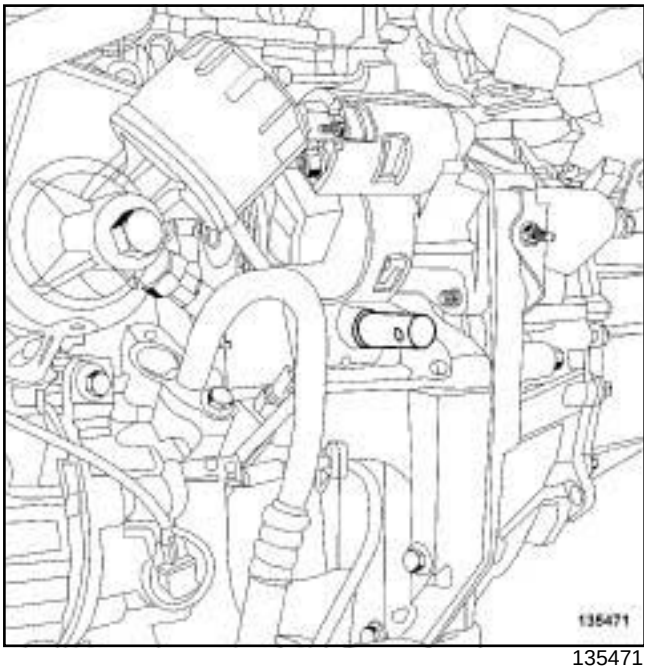

135471

❑ Screw tool **(Mot. 1489)** into the cylinder block.

❑ Remove the old bolt from the crankshaft accessories pulley fitted with its spacer.

II - REFITTING OPERATION FOR PART CONCERNED

❑ Refit:

- the crankshaft accessories pulley,
- a new crankshaft accessories pulley bolt.

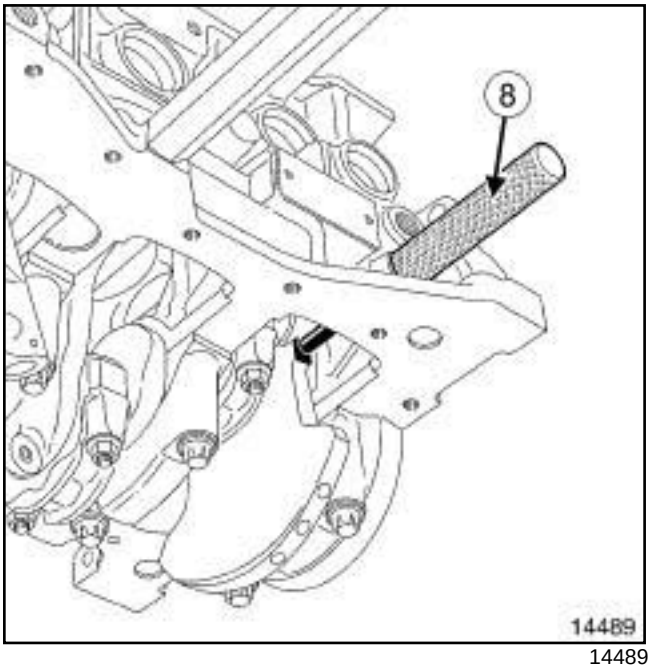

14489

❑ Turn the crankshaft clockwise (timing end) smoothly using the bolt of the crankshaft accessories pulley, until the crankshaft presses against the tool **(Mot. 1489)** (**8**) .

❑ Torque tighten the **crankshaft accessories pulley bolt (120 N.m + 95° ± 15°)**.

III - FINAL OPERATION

❑ Remove the **(Mot. 1489)** from the cylinder block.

❑ Apply a drop of **SILICONE ADHESIVE SEALANT** (see **Vehicle: Parts and ingredients for the repairwork**) to the threading of the TDC pin plug.

❑ Tighten to torque the **TDC pin plug (23 N.m)**.

❑ Refit:

- the accessories belt (see **11A**, **Top and front of engine**, **Accessories belt: Removal - Refitting**, page **11A-7**) ,
- the engine undertray,
- the front section of the front right-hand wheel arch liner (see **Front wheel arch liner: Removal - Refitting**) (55A, Exterior protection),
- the front right-hand wheel (see **Wheel: Removal - Refitting**) (35A, Wheels and tyres),
- the engine cover.

F4R

Tightening torques ▽	
crankshaft accessories pulley bolt	**40 N.m + 110° ± 10**

IMPORTANT
Wear protective gloves during the operation.

WARNING
Do not run the engine without the accessories belt to avoid damaging the crankshaft accessories pulley.

REMOVAL

I - REMOVAL PREPARATION OPERATION

❑ Position the vehicle on a two-post lift (see **Vehicle: Towing and lifting**) (02A, Lifting equipment).

❑ Remove:

- the front right-hand wheel (see **Wheel: Removal - Refitting**) (35A, Wheels and tyres),
- the front section of the front right-hand wheel arch liner (see **Front wheel arch liner: Removal - Refitting**) (55A, Exterior protection),
- the accessories belt (see **11A**, **Top and front of engine**, **Accessories belt: Removal - Refitting**, page **11A-7**) ,
- the engine undertray bolts,
- the engine undertray.

II - OPERATION FOR REMOVAL OF PART CONCERNED

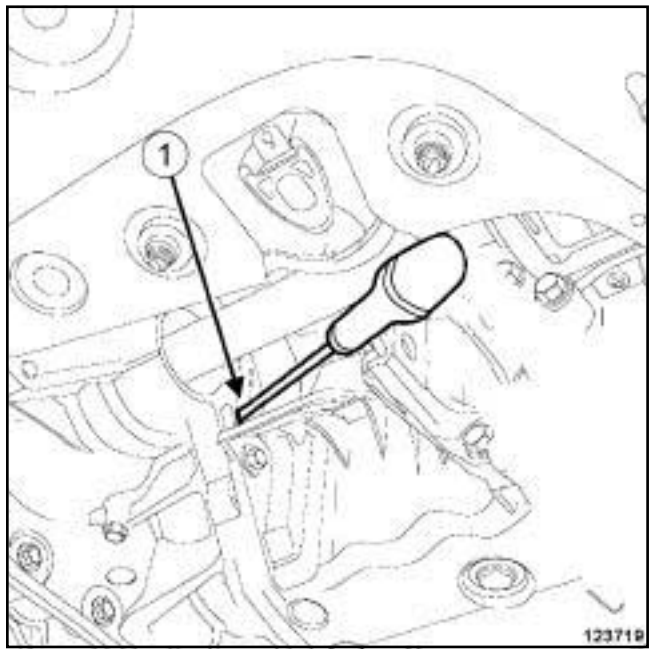

123719

❑ Immobilise the flywheel using a screwdriver or a male offset BTR wrench at (**1**) .

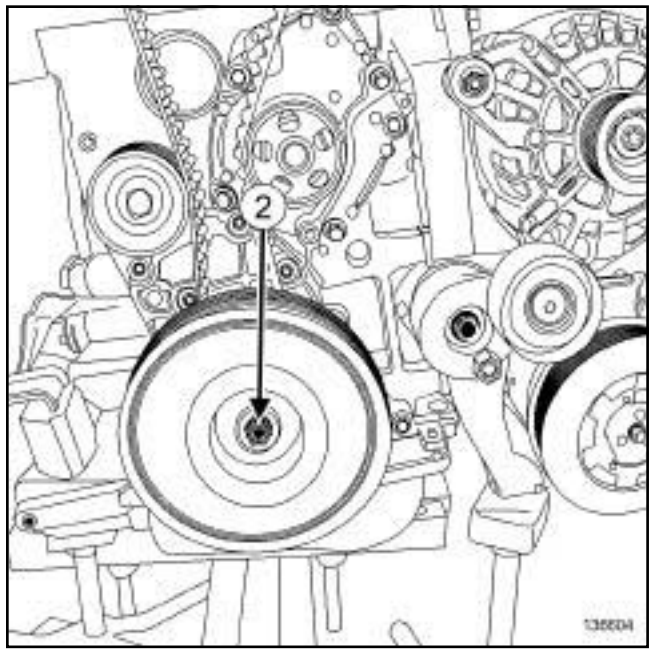

136604

❑ Remove:

- the crankshaft accessories pulley bolt (**2**) ,
- the crankshaft accessories pulley.

F4R

REFITTING

I - REFITTING PREPARATION OPERATION

- **parts always to be replaced: Crankshaft accessories pulley bolts (10,03,03,10)**.
- **parts always to be replaced: Crankshaft accessories pulley (10,03,03,07)**.

II - REFITTING OPERATION FOR PART CONCERNED

- Refit:
  - a new crankshaft accessories pulley,
  - a new bolt on the crankshaft accessories pulley by immobilising the engine using a screwdriver or a male offset BTR wrench.
- Torque tighten the **crankshaft accessories pulley bolt (40 N.m + 110° ± 10)**.

III - FINAL OPERATION

- Refit:
  - the engine undertray,
  - the accessories belt (see **11A**, **Top and front of engine**, **Accessories belt: Removal - Refitting**, page **11A-7**) ,
  - the front section of the front right-hand wheel arch liner (see **Front wheel arch liner: Removal - Refitting**) (55A, Exterior protection),
  - the front right-hand wheel (see **Wheel: Removal - Refitting**) (35A, Wheels and tyres).

K4M

Essential special tooling	
Mot. 1489	TDC locating pin.
Mot. 1496	Tool for setting camshaft.
Mot. 1750	Addition to retaining camshaft setting tool Mot. 1496 .
Mot. 1487	Tool for removing the camshaft covers (57 mm diameter).
Mot. 1488	Tool for removing the camshaft covers (43 mm diameter).

Tightening torques ▽	
new bolt of the crankshaft accessories pulley	**40 N.m + 145° ± 15°**
lifting eye bolts	**10 N.m**
dipstick guide tube bolt	**10 N.m**
TDC pin plug	**25 N.m**
crankshaft position sensor bolt	**10 N.m**

IMPORTANT
Wear protective gloves during the operation.

WARNING
Do not run the engine without the accessories belt to avoid damaging the crankshaft accessories pulley.

REMOVAL

I - REMOVAL PREPARATION OPERATION

❑ Position the vehicle on a two-post lift (see **Vehicle: Towing and lifting**) (02A, Lifting equipment).

❑ Remove:

- the engine cover,
- the throttle valve (see **12A**, **Fuel mixture**, **Throttle valve: Removal - Refitting**, page **12A-17**) ,
- the front right-hand wheel (see **Wheel: Removal - Refitting**) (35A, Wheels and tyres),
- the front section of the front right-hand wheel arch liner (see **Front wheel arch liner: Removal - Refitting**) (55A, Exterior protection),
- the engine undertray bolts,
- the engine undertray,
- the accessories belt (see **11A**, **Top and front of engine**, **Accessories belt: Removal - Refitting**, page **11A-7**) .

K4M, and 858 or 866

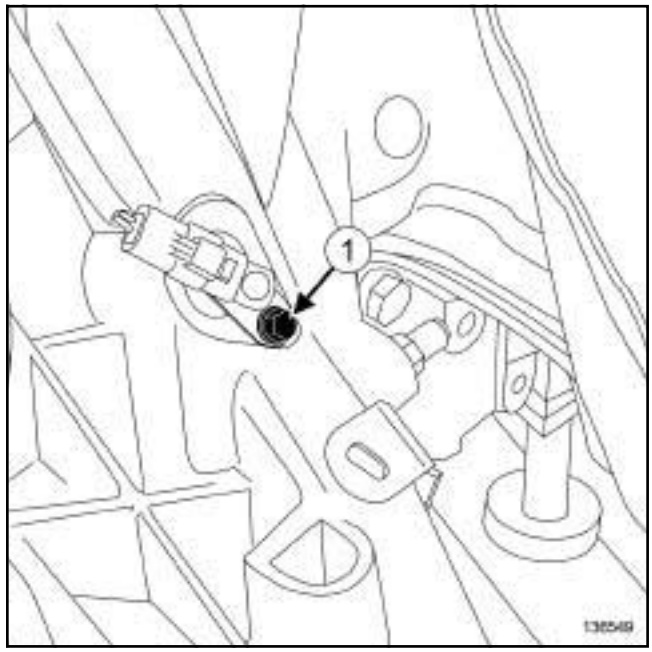

136549

❑ Remove the bolt (**1**) from the crankshaft position sensor.

❑ Move the crankshaft position sensor aside.

K4M

K4M, and 848

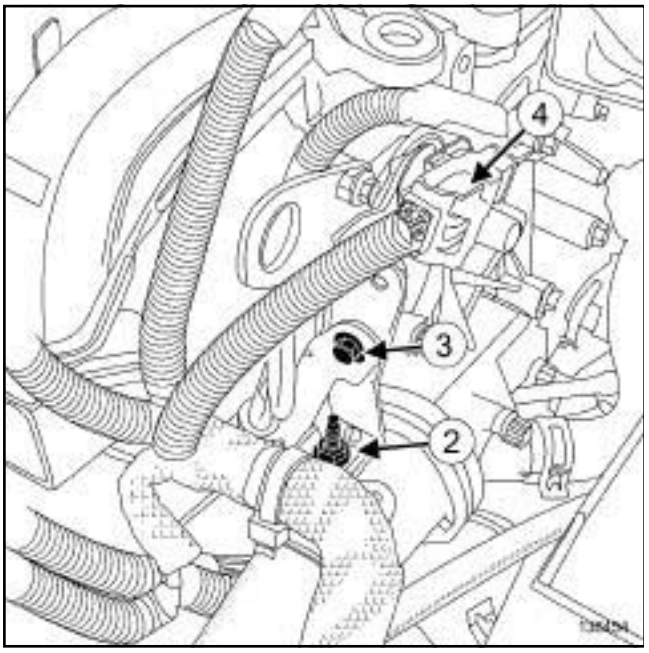

136454

❑ Remove:

- the nut (**2**) securing the engine wiring on the lifting eye,
- the dipstick guide bolt (**3**) from the lifting eye.

❑ Unclip the engine wiring connector (**4**) from the lifting eye.

❑ Move aside the engine wiring.

K4M, and 858 or 866

❑ Remove the nut securing the engine wiring on the lifting eye.

❑ Unclip the engine wiring connector from the lifting eye.

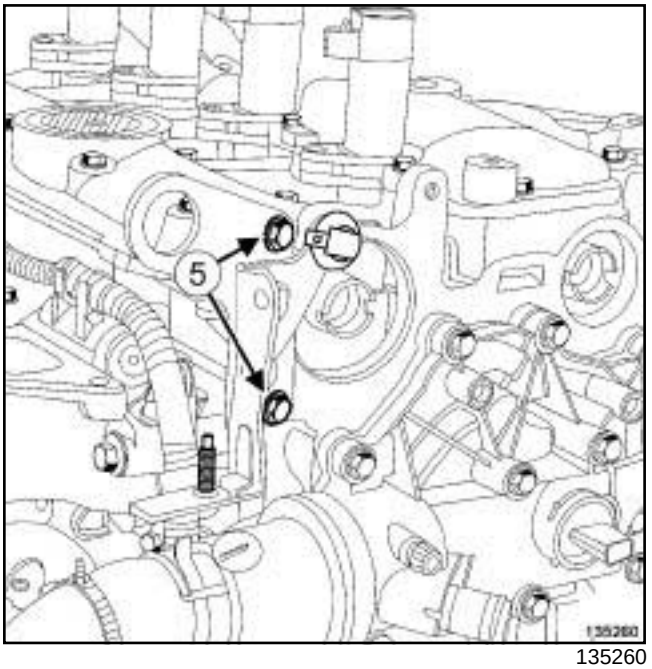

135260

❑ Remove:

- the lifting eye bolts (**5**) ,
- the lifting eye.

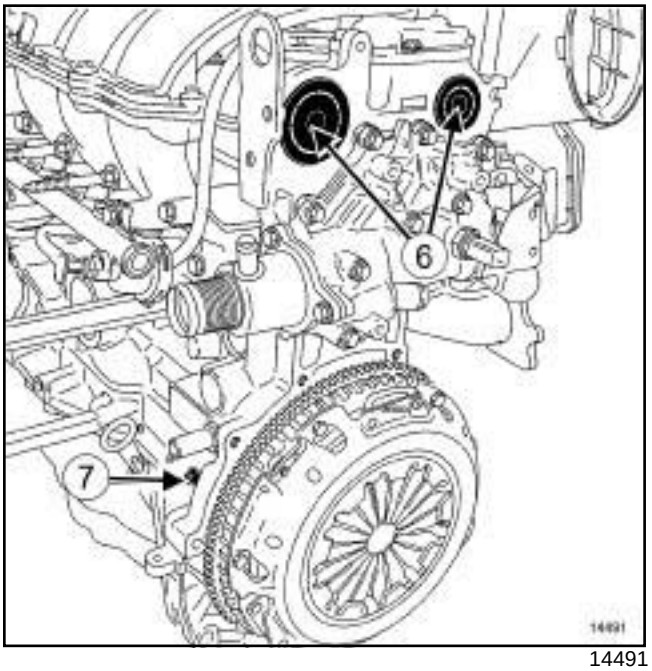

14491

❑ Pierce the centre of the plugs (**6**) at the camshaft ends with a screwdriver.

❑ Remove:

- the plugs from the camshaft ends with a screwdriver,
- the TDC setting pin plug (**7**) .

K4M

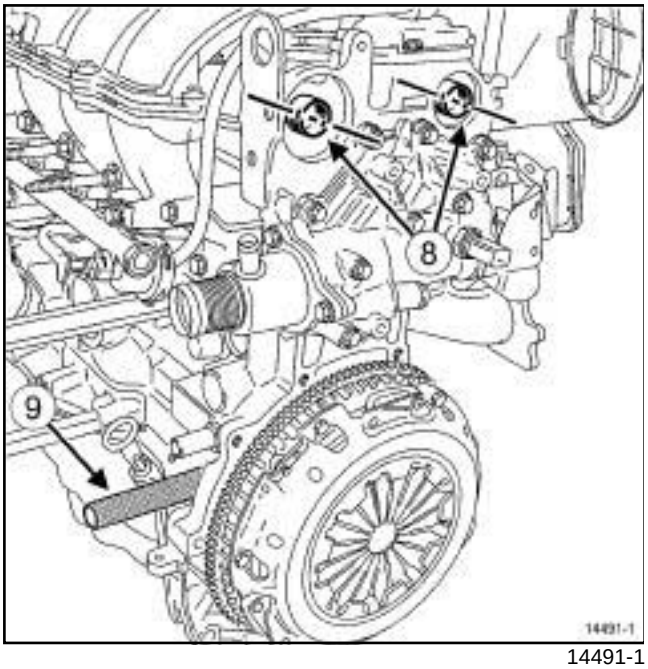

14491-1

- Position the camshaft grooves (**8**) almost horizontally and offset towards the bottom turning the crankshaft in the operating direction (clockwise at timing end).
- Screw in the TDC setting pin **(Mot. 1489)** (**9**) .

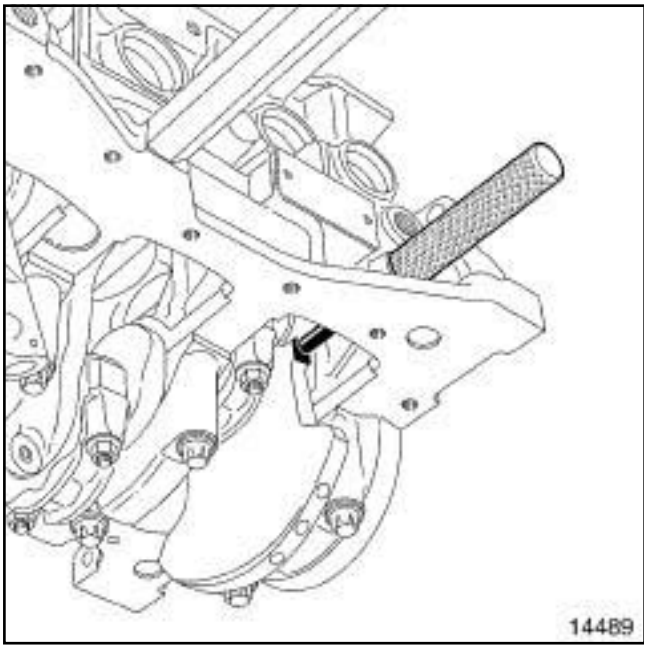

14489

- Turn the crankshaft in its operating direction (clockwise at timing end), until the crankshaft presses against the TDC setting pin **(Mot. 1489)**.

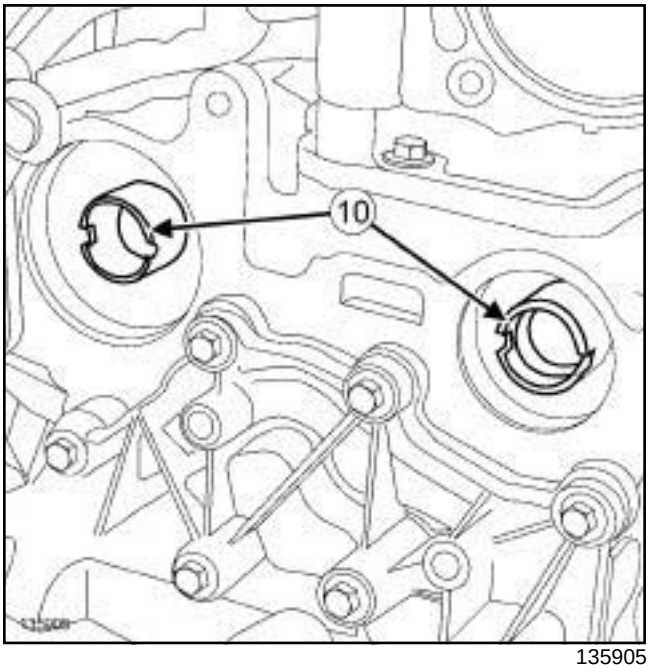

135905

- The camshaft grooves (**10**) must be horizontal and offset downwards.
- Remove the TDC setting pin **(Mot. 1489)**.

K4M, and 848

- Lock the flywheel using a screwdriver.

K4M

K4M, and 858 or 866

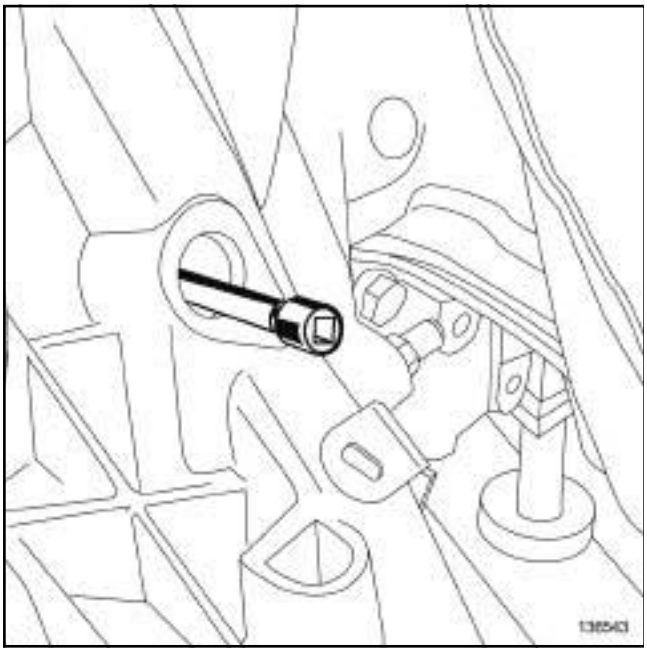

136543

❑ Position an **8mm** male offset Allen key or a ratchet extension piece in the crankshaft position sensor hole.

WARNING

Failure to observe the following procedure may damage the flywheel target and therefore prevent the engine from starting.

❑ Turn the engine slightly and smoothly to position the offset key in the groove of a flywheel target tooth.

II - OPERATION FOR REMOVAL OF PART CONCERNED

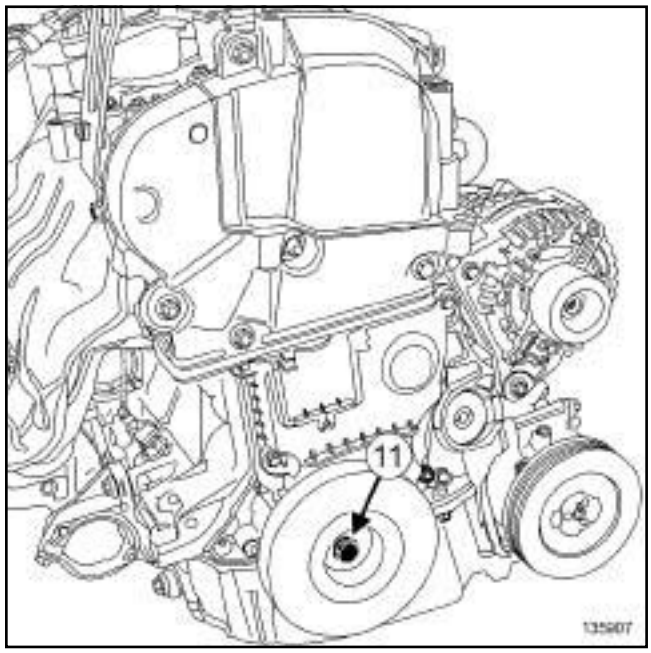

135907

❑ Remove:

- the crankshaft accessories pulley bolt (**11**) ,
- the crankshaft accessories pulley.

REFITTING

I - REFITTING PREPARATION OPERATION

❑ **parts always to be replaced: Crankshaft accessories pulley bolts (10,10,01,11)**.

.

K4M

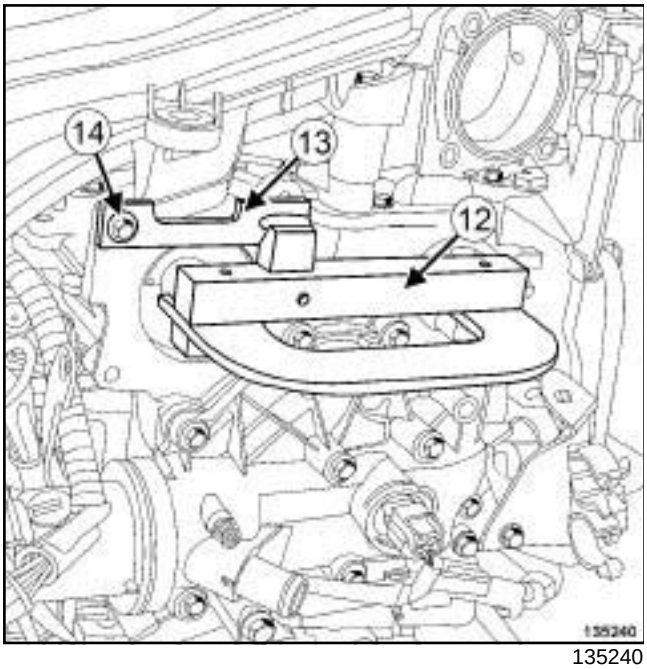

135240

❑ Fit:

- the timing tool **(Mot. 1496)** (**12**) fitted with the **(Mot. 1750)** (**13**) ,
- a lifting eye bolt (**14**) to secure the timing tool **(Mot. 1496)** fitted with the **(Mot. 1750)**.

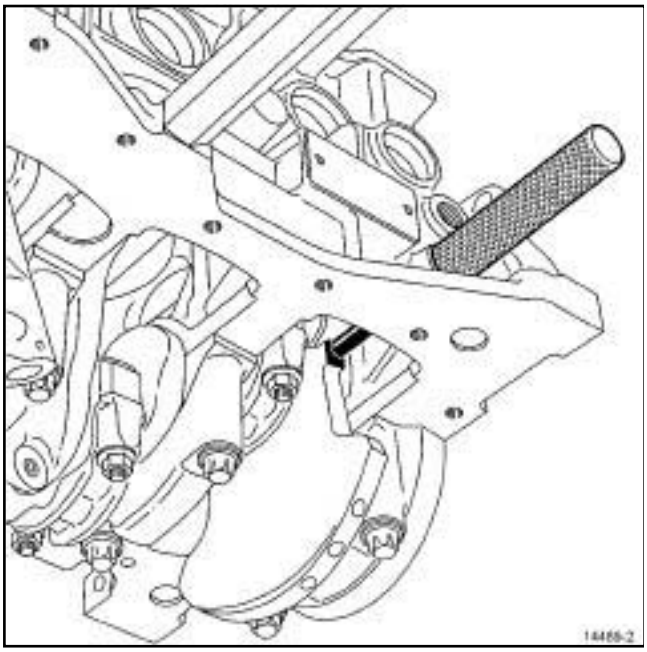

14489-2

❑ Screw in the TDC setting pin **(Mot. 1489)**.

❑ Check that the crankshaft is pressing against the TDC setting pin.

❑ The crankshaft groove must be upwards.

K4M, and 848

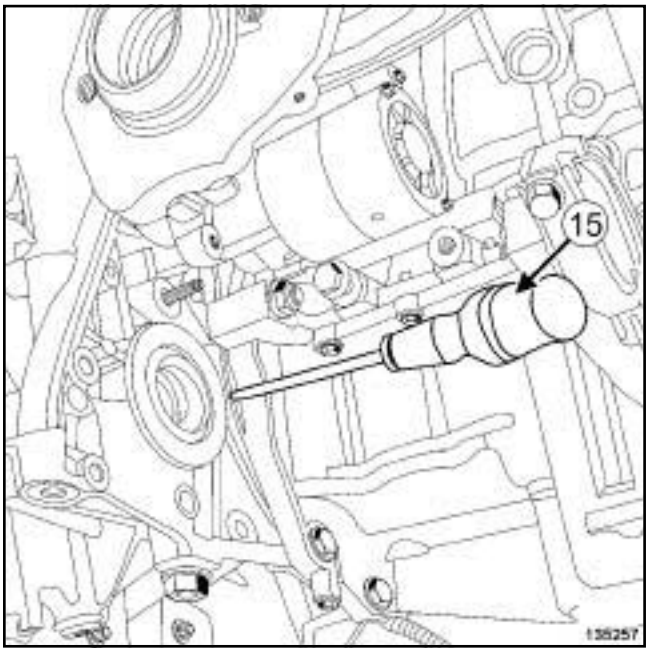

135257

❑ If the crankshaft is not pressing against the TDC setting pin, bring the crankshaft back by turning the flywheel using a screwdriver (**15**) .

K4M

K4M, and 858 or 866

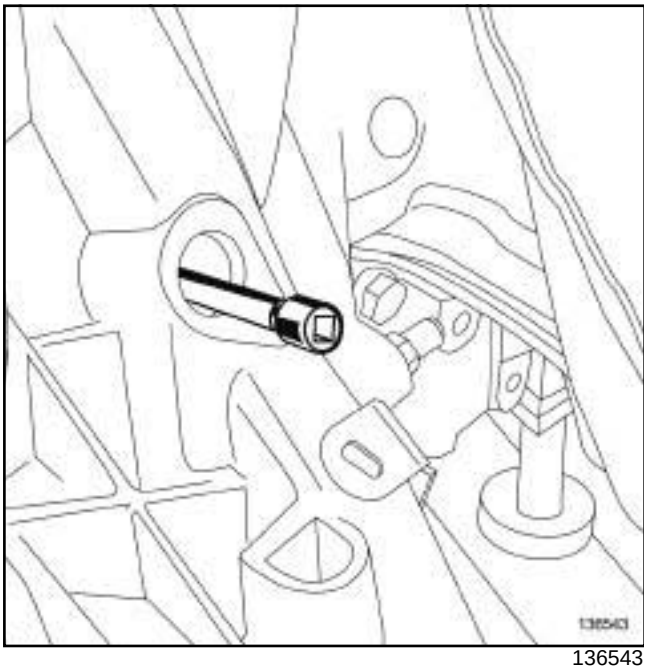

136543

❑ If the crankshaft is not pressing against the TDC setting pin, bring the crankshaft back by turning the flywheel using a ratchet extension piece or an **8 mm** Allen key through the crankshaft position sensor hole.

II - REFITTING OPERATION FOR PART CONCERNED

❑ Refit the accessories crankshaft pulley with a new bolt.

❑ Torque tighten the **new bolt of the crankshaft accessories pulley (40 N.m + 145° ± 15°)**.

III - FINAL OPERATION

❑ Remove:

- the TDC setting pin **(Mot. 1489)**,
- the lifting eye bolt from the timing tool **(Mot. 1496)** fitted with the **(Mot. 1750)**,
- the timing tool **(Mot. 1496)** fitted with the **(Mot. 1750)**.

❑ Refit:

- the inlet camshaft plug using the **(Mot. 1487)**,
- the exhaust camshaft plug using the **(Mot. 1488)**,
- the lifting eye.

❑ Torque tighten the **lifting eye bolts (10 N.m)**.

❑ Fit the engine wiring on the lifting eye.

K4M, and 848

❑ Clip the engine wiring connector on the lifting eye.

❑ Refit:

- the engine wiring retaining bolt on the lifting eye,
- the dipstick guide on the lifting eye.

❑ Torque tighten the **dipstick guide tube bolt (10 N.m)**.

K4M, and 858 or 866

❑ Refit the engine wiring nut on the lifting eye.

❑ Clip the engine wiring connector onto the lifting eye.

❑ Place a drop of **SILICONE ADHESIVE SEALANT** (see **Vehicle: Parts and ingredients for the repairwork**) (04B, Consumables - Products) on the thread of the TDC setting pin plug.

❑ Refit the TDC setting pin plug.

❑ Torque tighten the **TDC pin plug (25 N.m)**.

K4M, and 858 or 866

❑ Fit the crankshaft position sensor.

❑ Refit the bolt on the crankshaft position sensor.

❑ Torque tighten the **crankshaft position sensor bolt (10 N.m)**.

❑ Refit:

- the accessories belt (see **11A**, **Top and front of engine**, **Accessories belt: Removal - Refitting**, page **11A-7**) ,
- the engine undertray,
- the front section of the front right-hand wheel arch liner (see **Front wheel arch liner: Removal - Refitting**) (55A, Exterior protection),
- the front right-hand wheel (see **Wheel: Removal - Refitting**) (35A, Wheels and tyres),
- the throttle valve (see **12A**, **Fuel mixture**, **Throttle valve: Removal - Refitting**, page **12A-17**) ,

K4M

- the engine cover.

F9Q

Essential equipment
brush with non abrasive bristles

Tightening torques ▽	
crankshaft accessories pulley bolt	**40 N.m + 110° +/- 10°**

IMPORTANT

Wear protective gloves during the operation.

WARNING

Do not run the engine without the accessories belt to avoid damaging the crankshaft accessories pulley.

REMOVAL

I - REMOVAL PREPARATION OPERATION

❑ Position the vehicle on a two-post lift (see **Vehicle: Towing and lifting**) (02A, Lifting equipment).

❑ Remove:

- the engine undertray bolts,
- the engine undertray,
- the front right-hand wheel (see **Wheel: Removal - Refitting**) (35A, Wheels and tyres),
- the front right-hand wheel arch liner (see **Front wheel arch liner: Removal - Refitting**) (55A, Exterior protection),
- the accessories belt (see **11A**, **Top and front of engine**, **Accessories belt: Removal - Refitting**, page **11A-7**) .

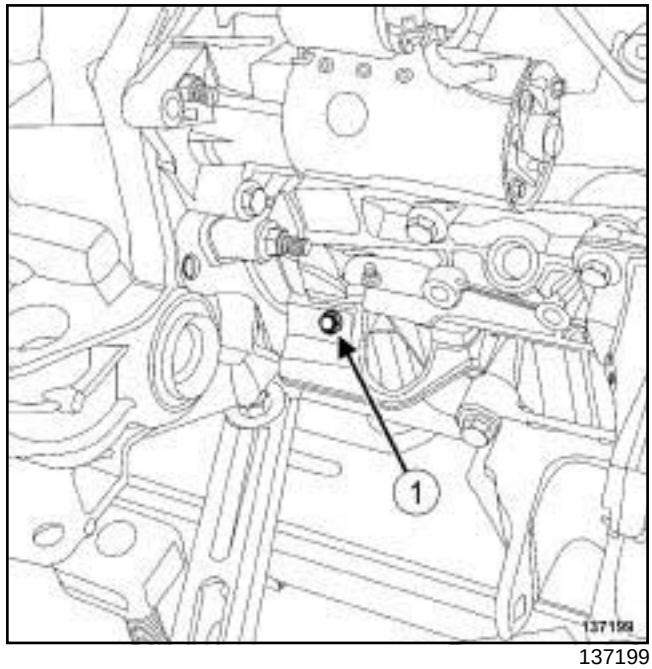

137199

❑ Remove the bolt (**1**) from the protective plate.

❑ Remove the protective plate.

❑ Lock the flywheel using a **30** torx screwdriver.

II - OPERATION FOR REMOVAL OF PART CONCERNED

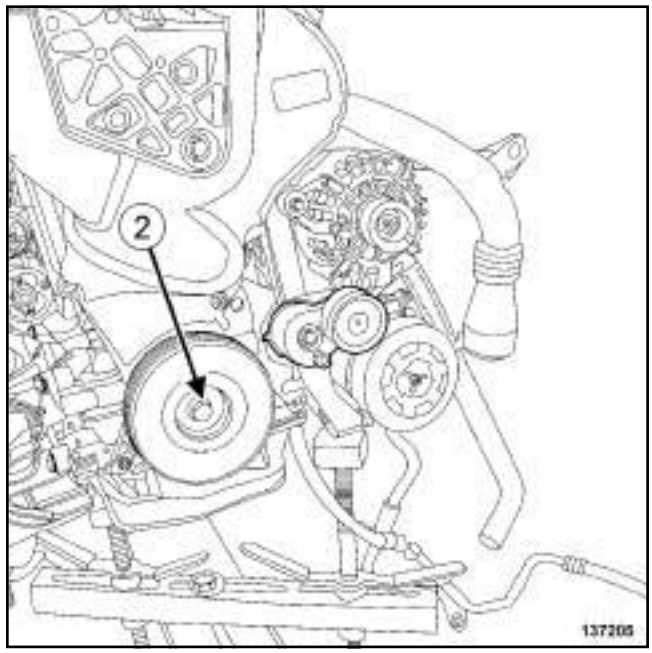

137205

❑ Remove:

- the crankshaft accessories pulley bolt (**2**) ,
- the crankshaft accessories pulley.

F9Q

REFITTING

I - REFITTING PREPARATION OPERATION

- **parts always to be replaced: Crankshaft accessories pulley bolts (10,03,03,10)**.
- Clean the crankshaft accessories pulley V grooves using a **brush with non abrasive bristles** if it is to be reused.

II - REFITTING OPERATION FOR PART CONCERNED

- Refit the crankshaft accessories pulley.

> Note:
>
> Only replace the crankshaft accessories pulley during general maintenance operations.

- Lock the flywheel using a 30 torx screwdriver.
- Torque tighten the **crankshaft accessories pulley bolt (40 N.m + 110° +/- 10°)**.

III - FINAL OPERATION

- Refit:
  - the protective plate,
  - the accessories belt (see **11A**, **Top and front of engine**, **Accessories belt: Removal - Refitting**, page **11A-7**) ,
  - the front right-hand wheel arch liner (see **Front wheel arch liner: Removal - Refitting**) (55A, Exterior protection),
  - the front right-hand wheel (see **Wheel: Removal - Refitting**) (35A, Wheels and tyres),
  - the engine undertray.

K9K

Essential special tooling	
Mot. 1489	TDC locating pin.
Mot. 1430	Set of 5 crankshaft and camshaft pulley timing pins.

Essential equipment
offset spanner

Tightening torques ▽	
timing belt tensioning roller bolt	**27 N.m**
camshaft pulley hub bolts	**14 N.m**
new crankshaft accessories pulley bolt	**120 N.m + 95 ± 15°**
TDC setting pin plug	**25 N.m**

REMOVAL

I - REMOVAL PREPARATION OPERATION

❑ Position the vehicle on a two-post lift (see **Vehicle: Towing and lifting**) (02A, Lifting equipment).

❑ Disconnect the battery (see **Battery: Removal - Refitting**) (80A, Battery).

❑ Remove:

- the engine cover,
- the front right-hand wheel (see **Wheel: Removal - Refitting**) (35A, Wheels and tyres),
- the front section of the front right-hand wheel arch liner (see **Front wheel arch liner: Removal - Refitting**) (55A, Exterior protection),
- the engine undertray bolts,
- the engine undertray,
- the accessories belt (see **11A**, **Top and front of engine**, **Accessories belt: Removal - Refitting**, page **11A-7**) ,
- the crankshaft accessories pulley (see **11A**, **Top and front of engine**, **Crankshaft accessories pulley: Removal - Refitting**, page **11A-15**) .

K9K, and 830 or 834

❑ Remove the lower engine tie-bar (see **19D**, **Engine mounting**, **Lower engine tie-bar: Removal - Refitting**, page **19D-33**) .

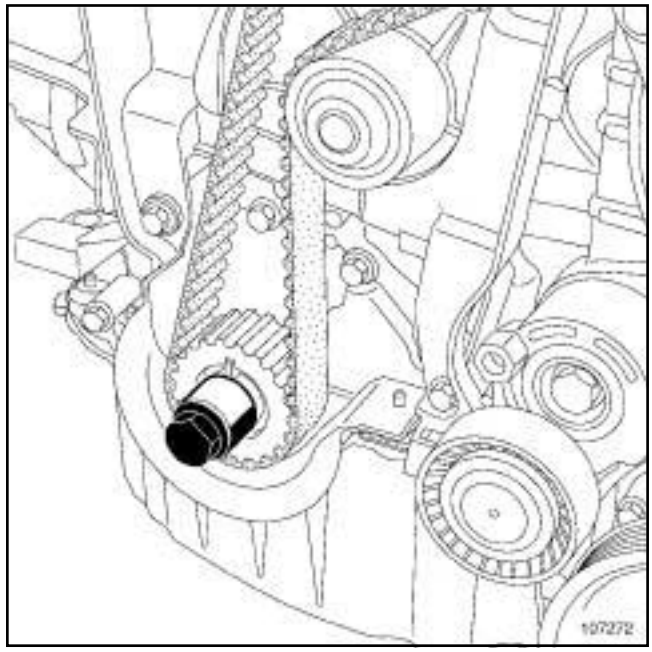

107272

❑ Refit the old crankshaft accessories pulley bolt with a spacer (which does not cover the crankshaft timing sprocket mark) on the crankshaft.

❑ Remove:

- the windscreen wiper arms (see **Windscreen wiper arm: Removal - Refitting**) (85A, Wiping - Washing),
- the scuttle panel grille (see **Scuttle panel grille: Removal - Refitting**) (56A, Exterior equipment),
- the scoop under the scuttle panel grille (see **Scoop under scuttle panel grille: Removal - Refitting**) (56A, Exterior equipment),
- the right-hand suspended engine mounting (see **19D**, **Engine mounting**, **Right-hand suspended engine mounting: Removal - Refitting**, page **19D-18**) .

K9K

K9K, and 830

- Remove the camshaft position sensor (see **13B**, **Diesel injection**, **Camshaft position sensor: Removal - Refitting**, page **13B-19**) .

K9K

K9K, and 832

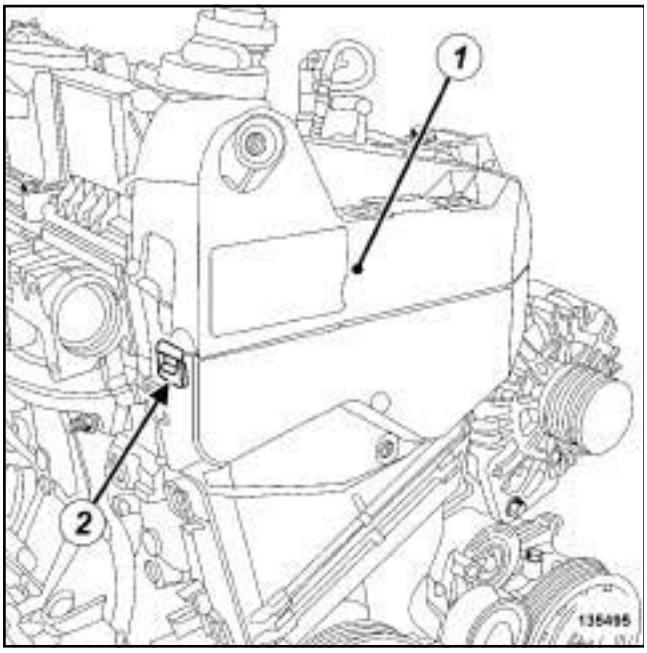

135495

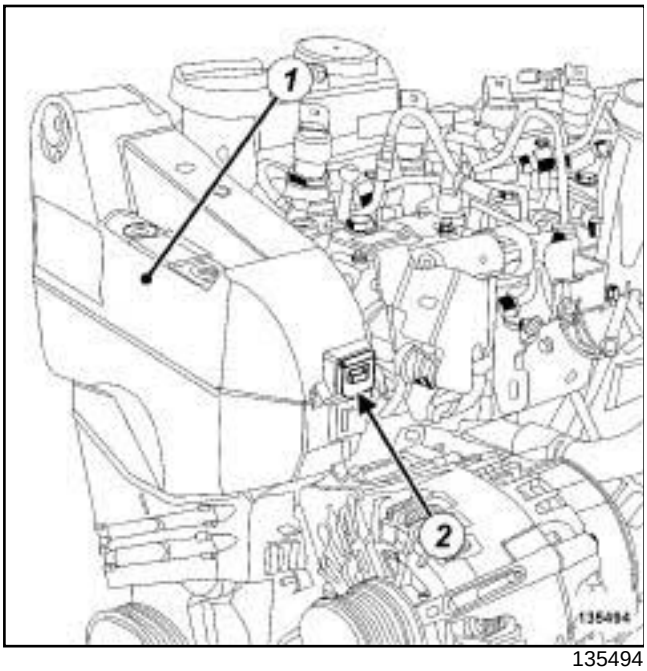

135494

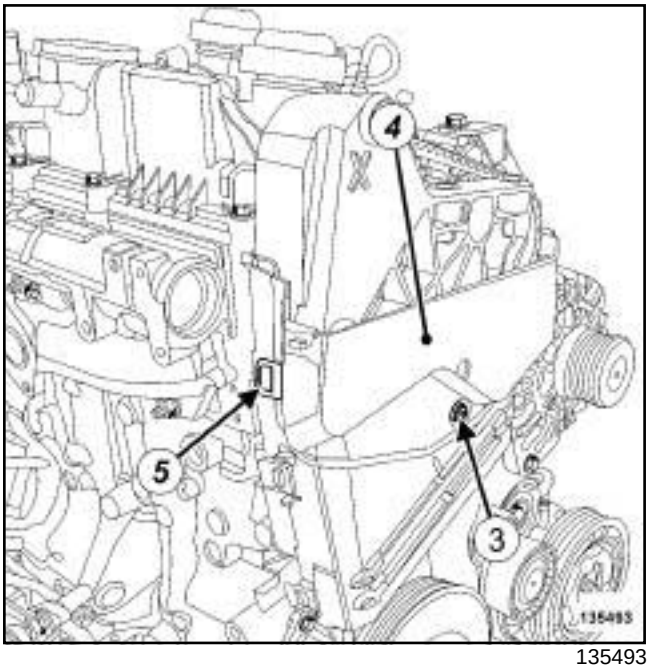

135493

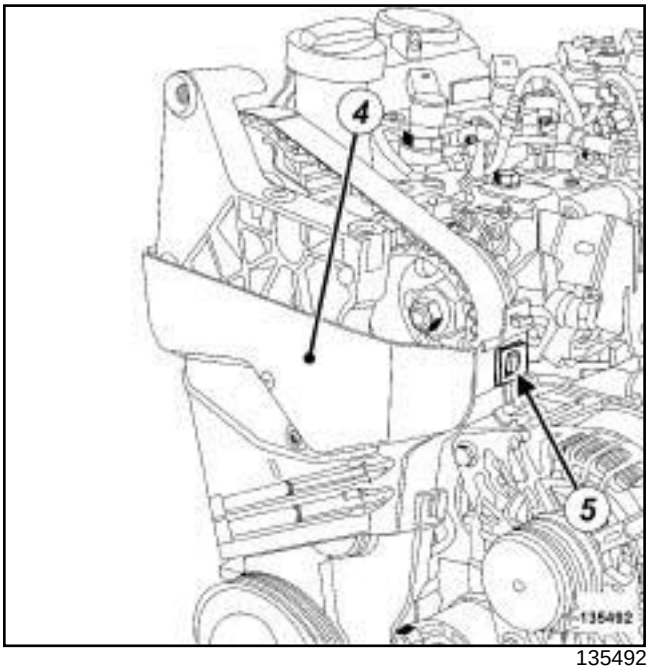

135492

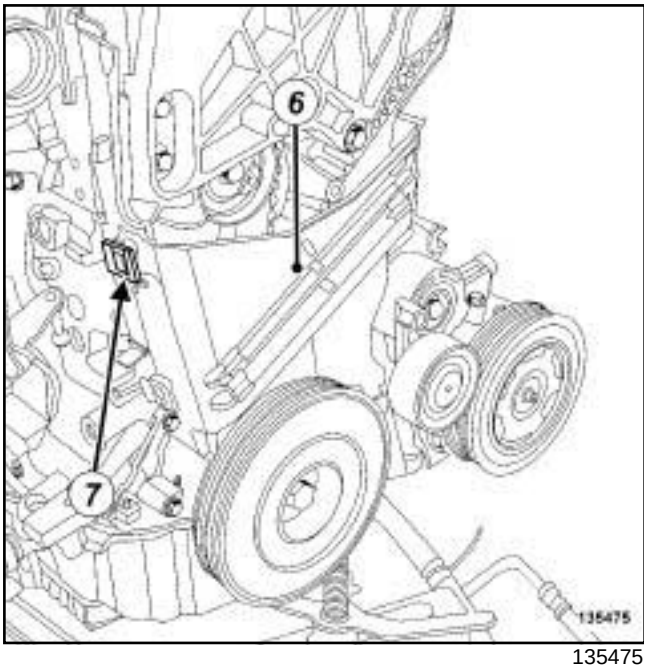

135475

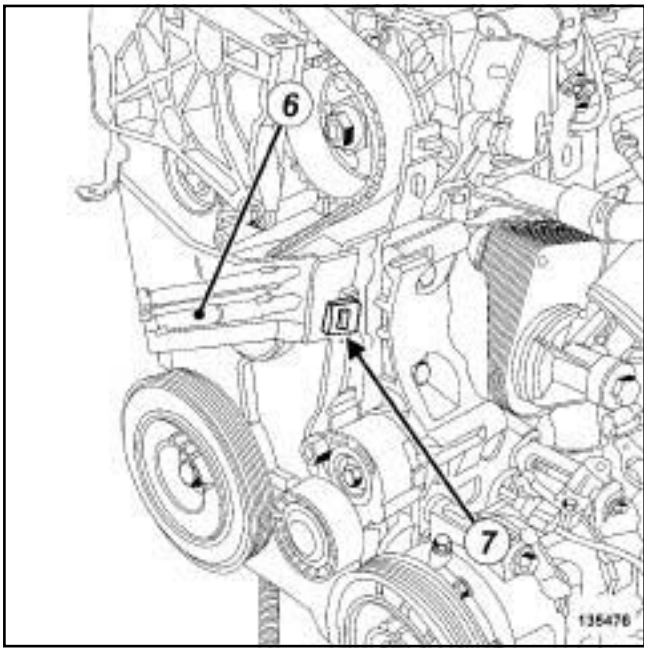

135476

❑ Remove:

- the upper timing cover (**1**) by pressing on the clips (**2**) ,
- the bolt (**3**) from the intermediate timing cover (**4**) ,
- the intermediate timing cover (**4**) by pressing on the clips (**5**) ,
- the lower timing cover (**6**) by pressing on the clips (**7**) .

K9K

K9K, and 830 or 834

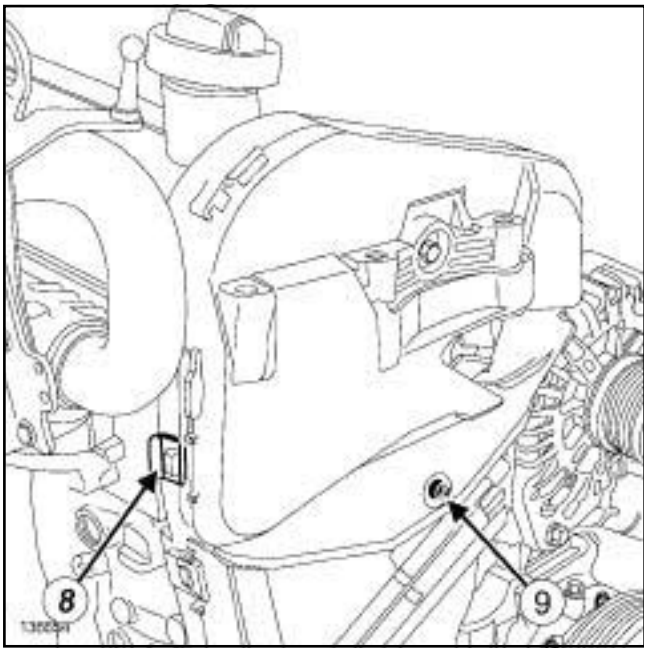

136654

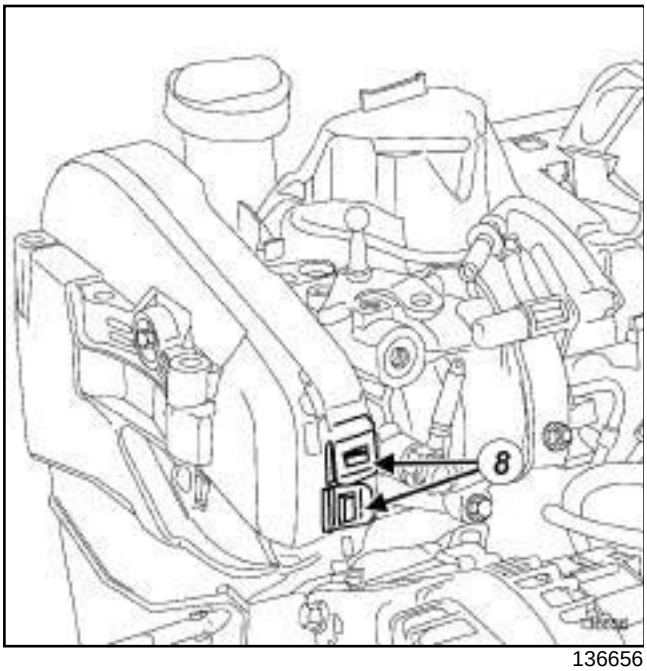

136656

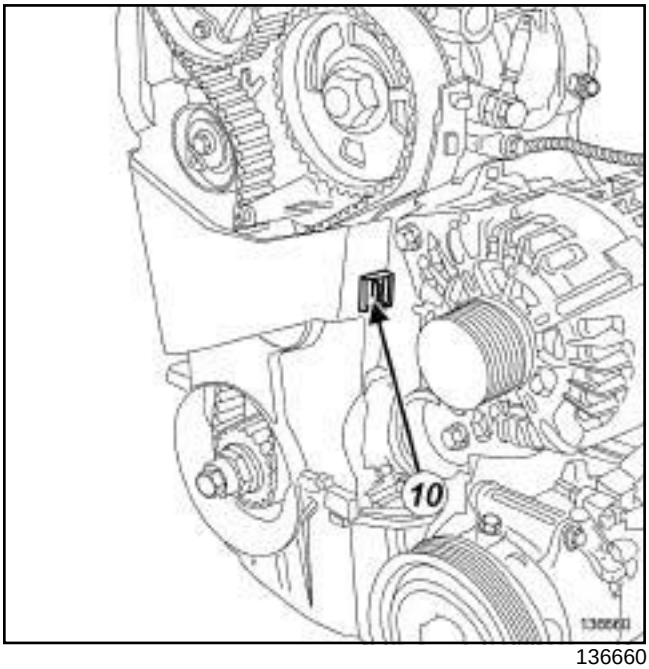

136660

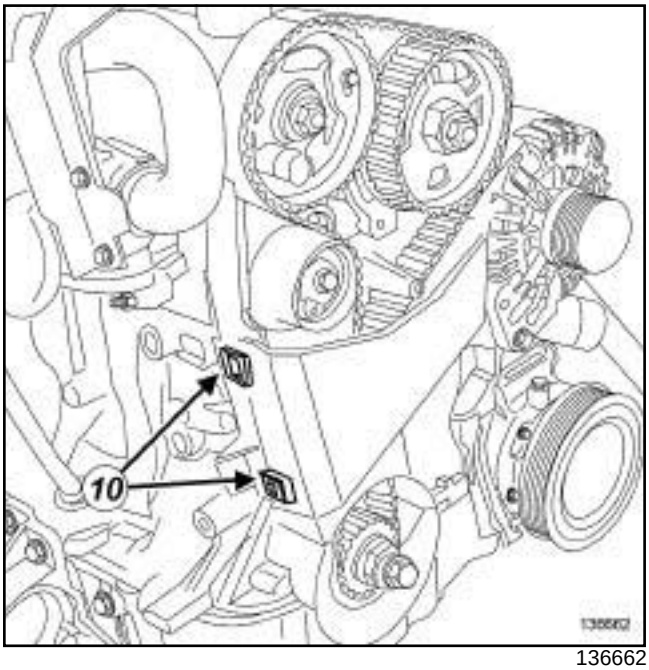

136662

❏ Unclip the upper timing cover at (**8**) .

❏ Remove:

- the bolt (**9**) from the upper timing cover,
- the upper timing cover,
- the lower timing cover by pressing the clips (**10**) .

K9K

K9K, and 832

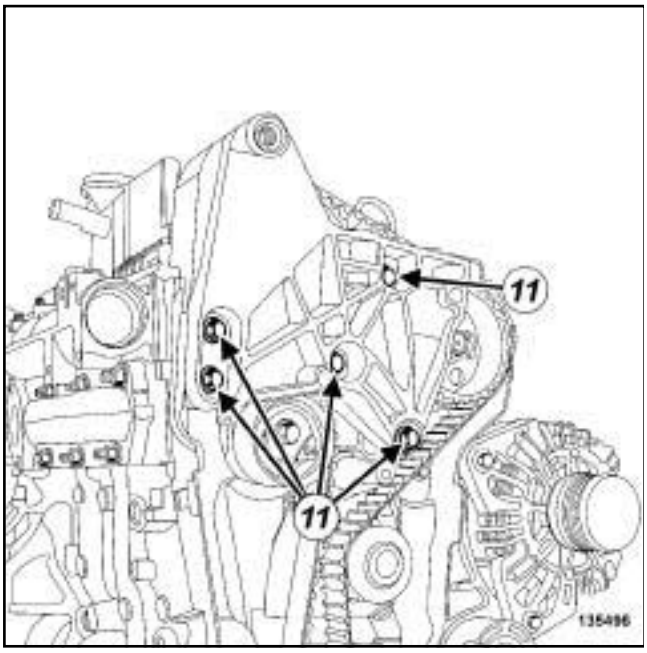

135496

❑ Remove the bolts (**11**) from the right-hand suspended engine mounting support on the cylinder head.

K9K, and 830 or 834

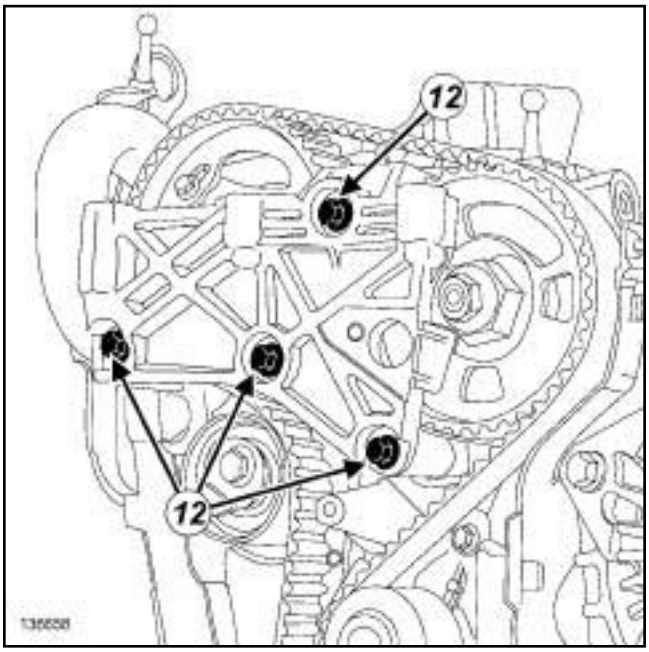

136658

❑ Remove the bolts (**12**) from the right-hand suspended engine mounting support on the cylinder head.

❑ Remove the right-hand suspended engine mounting support.

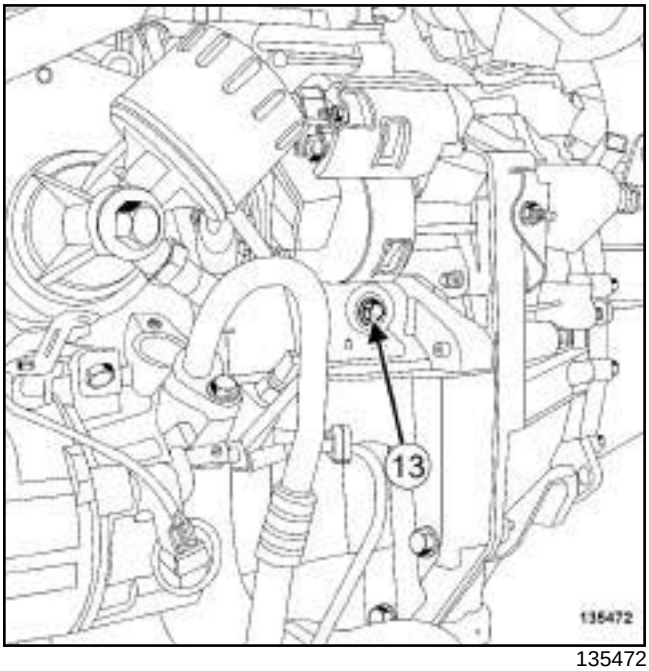

135472

❑ Remove the TDC setting pin plug (**13**) .

K9K

II - OPERATION FOR REMOVAL OF PART CONCERNED

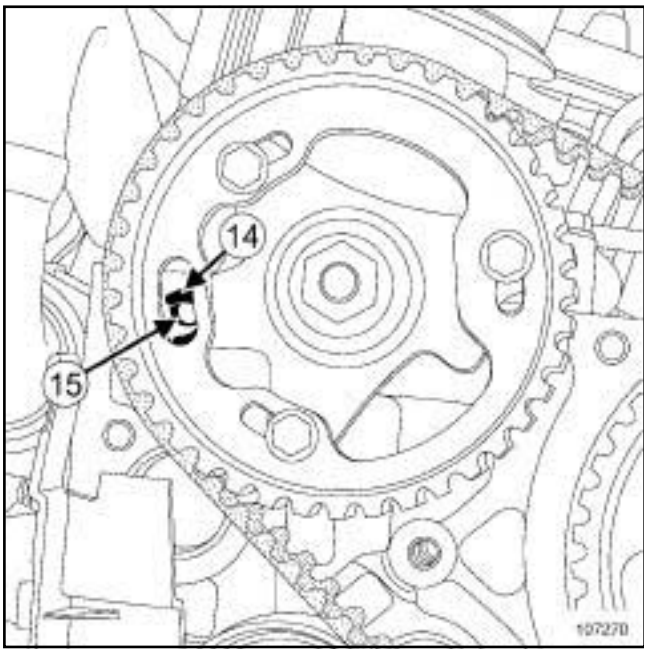

107270

❑ Turn the crankshaft clockwise (timing end) using the old crankshaft accessories pulley bolt and its spacer to position the hole (**14**) of the camshaft pulley hub almost opposite the hole (**15**) in the cylinder head.

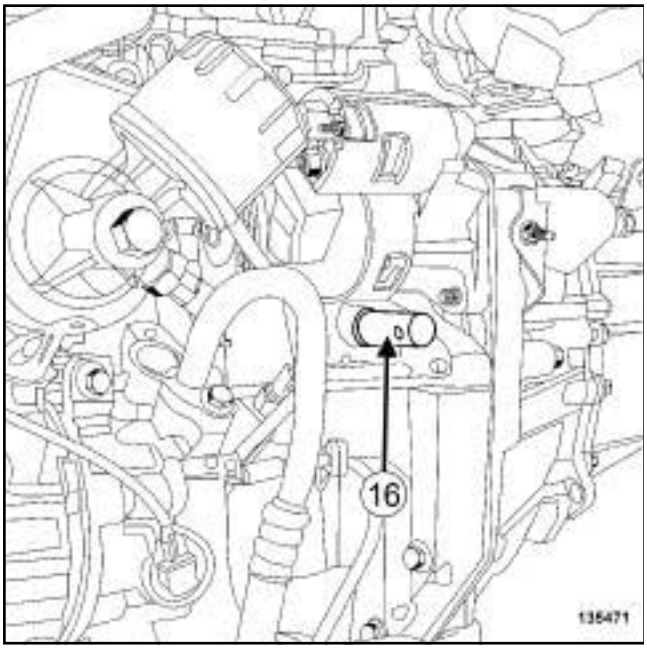

135471

❑ Screw tool **(Mot. 1489)** (**16**) into the cylinder block.

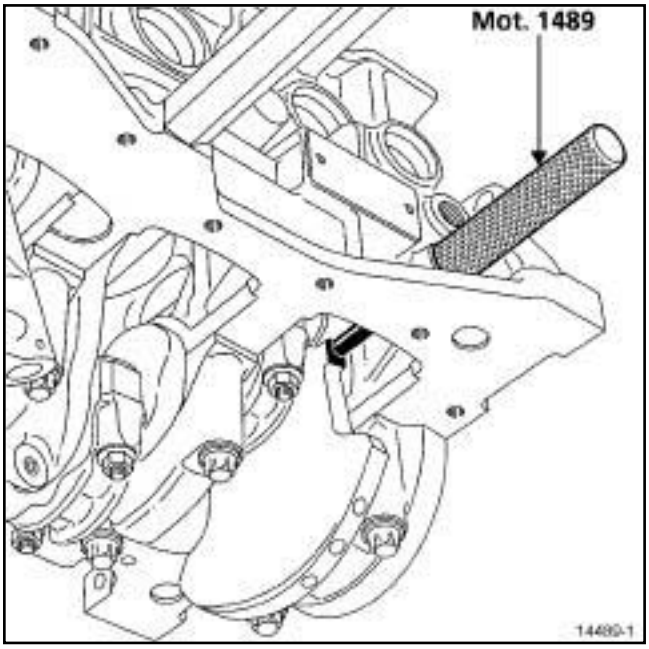

14489-1

❑ Turn the crankshaft clockwise (timing end) smoothly until the crankshaft comes in contact with the **(Mot. 1489)**.

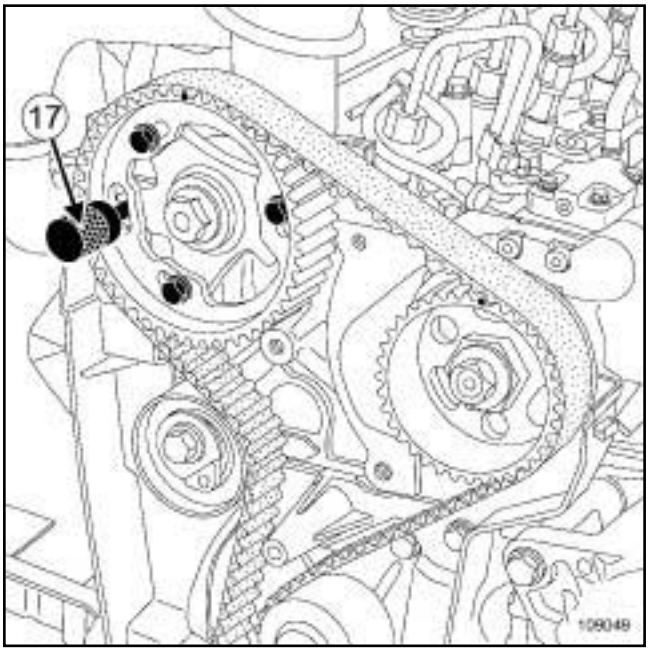

109049

❑ Insert the tool **(Mot. 1430)** (**17**) in the holes of the camshaft pulley hub and the hole of the cylinder head.

K9K

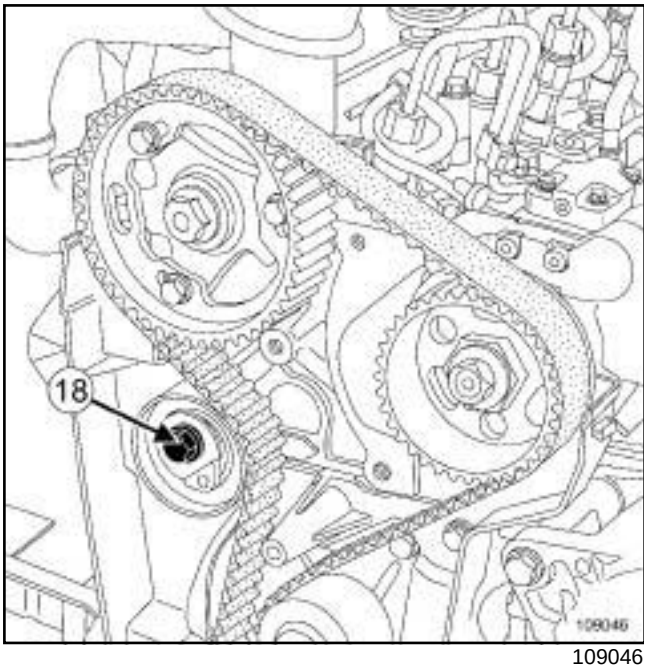

109046

- ❑ Undo the timing belt tensioning roller bolt (**18**) .
- ❑ Loosen the timing belt tensioning roller by turning the eccentric cam using a **6 mm** Allen key.
- ❑ Remove:
  - the timing belt,
  - the timing belt tensioning roller bolt,
  - the timing belt tensioning roller.

REFITTING

I - REFITTING PREPARATION OPERATION

- ❑ **parts always to be replaced: Timing belt (10,02, 04,02)**.
- ❑ **parts always to be replaced: Timing belt tensioning roller (10,02,04,04)**.
- ❑ **parts always to be replaced: Crankshaft accessories pulley bolts (10,03,03,10)**.
- ❑ Always replace the timing belt tensioning roller bolt.

II - REFITTING OPERATION FOR PART CONCERNED

K9K, and 832

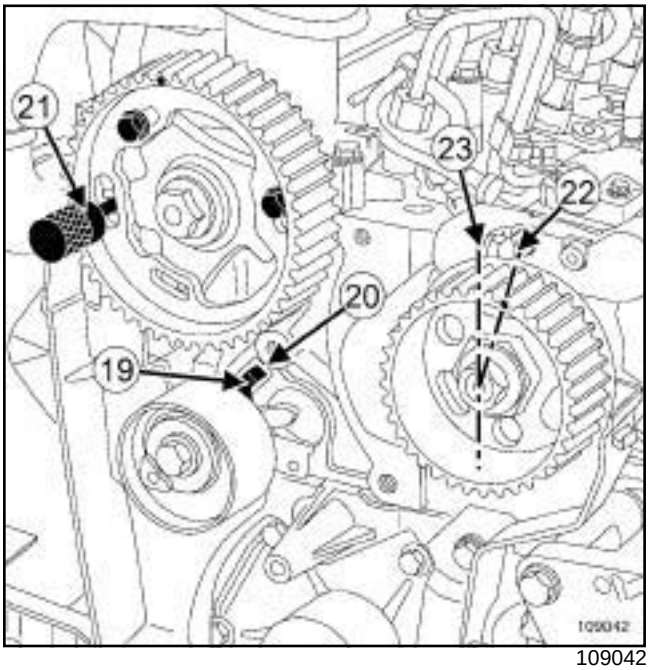

109042

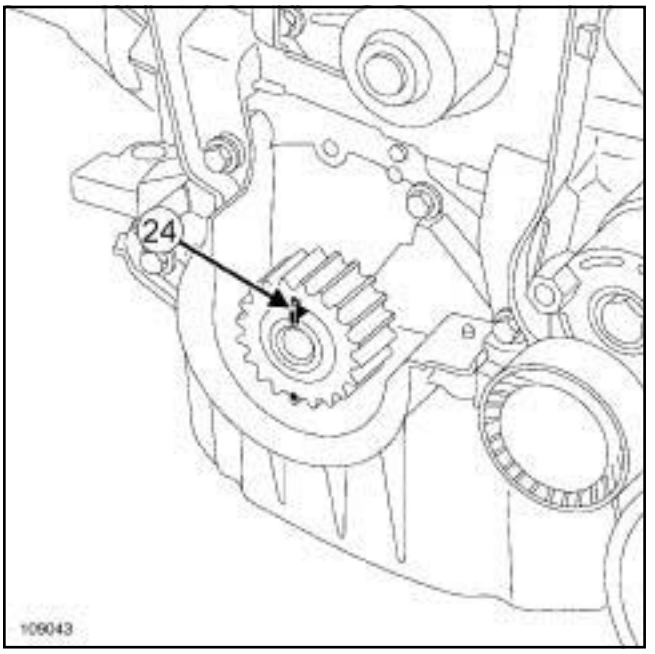

109043

- ❑ Refit the new timing belt tensioning roller.
- ❑ Fit the timing belt tensioning roller lug (**19**) in the cylinder head groove (**20**) .
- ❑ Check that:
  - the mark (**22**) on the high-pressure pump is offset by one tooth to the right of the vertical axis (**23**) ,

K9K

- the crankshaft is resting on the tool **(Mot. 1489)** (the cotter (**24**) of the crankshaft timing sprocket must be vertical and upwards).

K9K, and 830 or 834

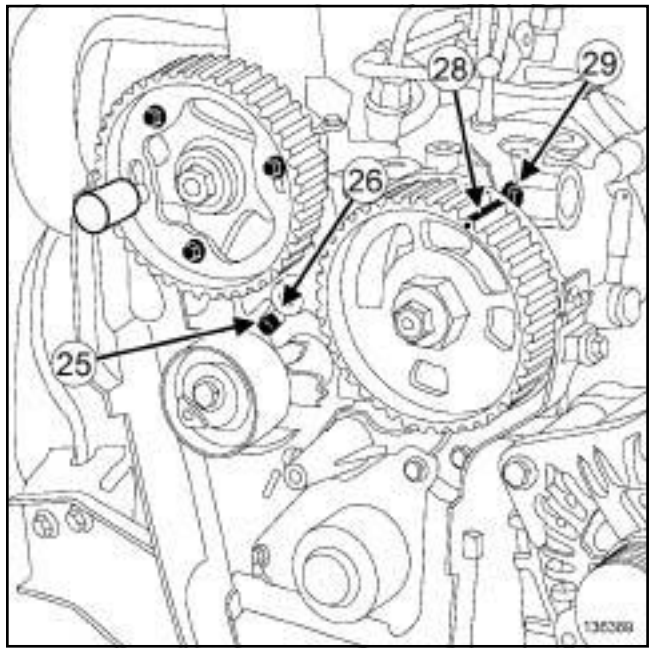

136389

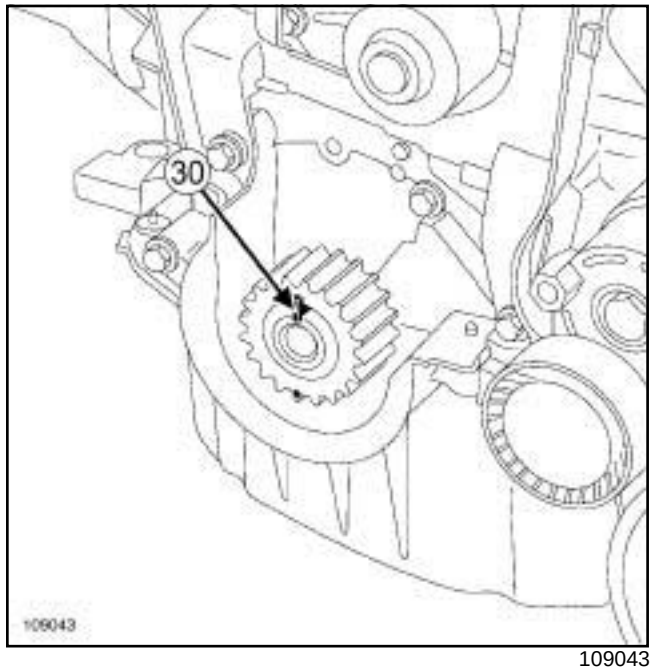

109043

❏ Refit the new timing belt tensioning roller.

❏ Fit the timing belt tensioning roller lug (**25**) in the cylinder head groove (**26**) .

❏ Check that:

- Check that the mark (**28**) on the high pressure pump is opposite the bolt head (**29**) .

- the crankshaft is resting on the tool **(Mot. 1489)** (the cotter (**30**) of the crankshaft timing sprocket upwards).

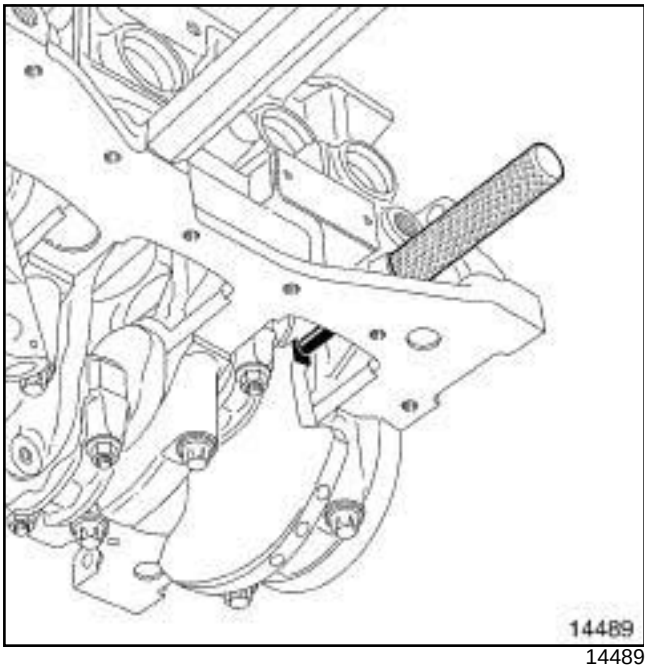

14489

❑ Check that the crankshaft is resting on the tool **(Mot. 1489)** while turning the crankshaft clockwise using the old crankshaft accessories pulley bolt and its spacer.

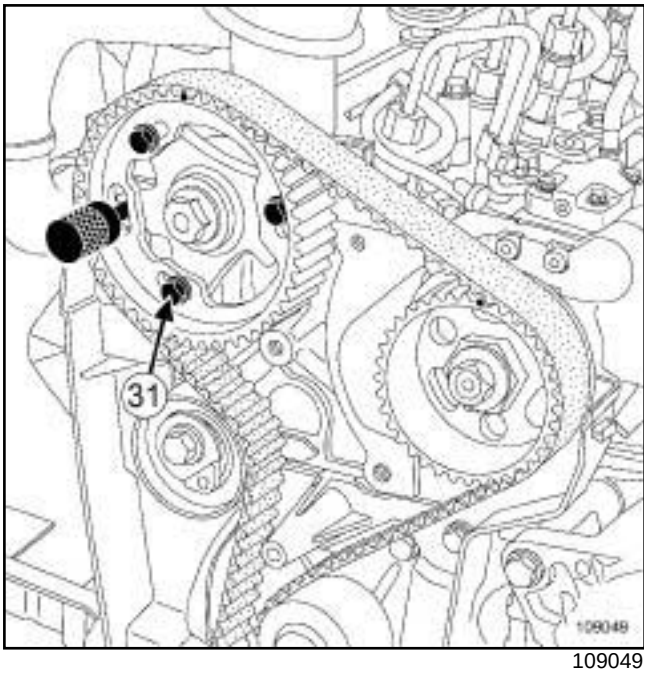

109049

❑ Remove the bolt (**31**) from the camshaft pulley hub.

❑ Loosen the other bolts of the camshaft pulley hub by one turn.

K9K

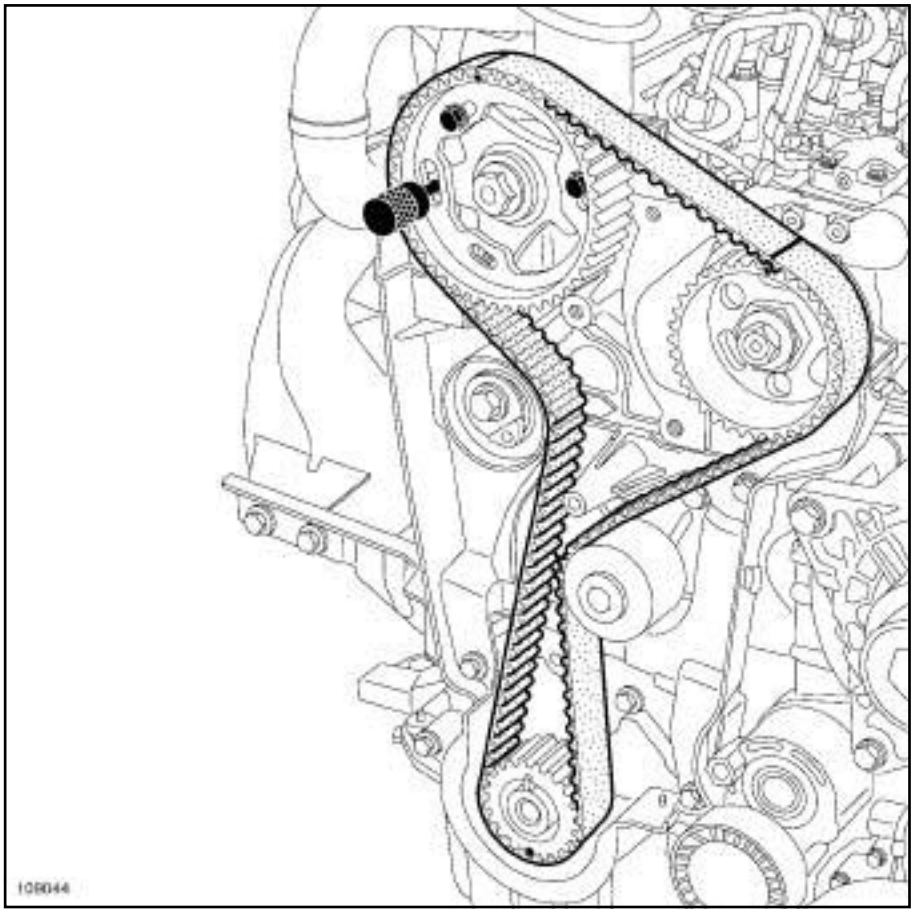

109044

- ❑ Fit the new timing belt starting with the crankshaft sprocket.
- ❑ Align the timing belt marks with the marks:
  - of the crankshaft timing sprocket,
  - of the camshaft pulley,
  - of the high pressure pump pulley.

> Note:
>
> There should be 19 timing belt tooth grooves between the marks on the camshaft pulley and the high pressure pump pulley and 51 timing belt tooth grooves between the marks on the crankshaft timing sprocket and the high pressure pump pulley.

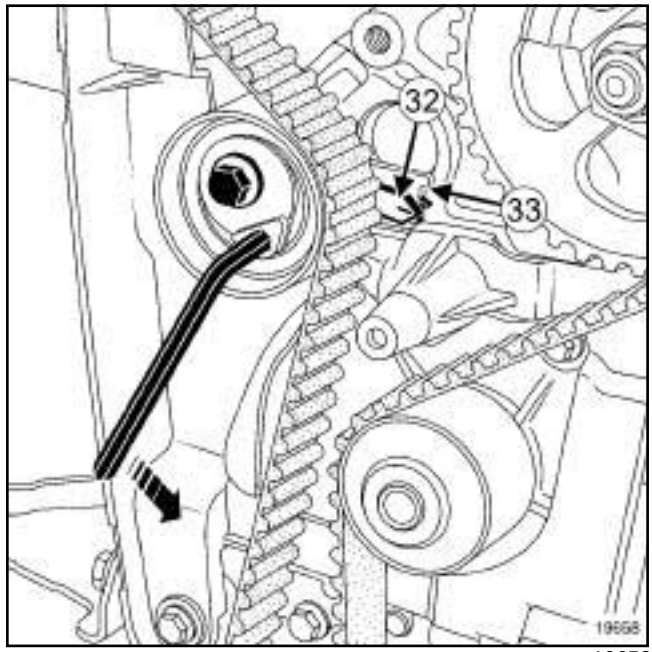

19658

- ❑ Bring the timing belt tensioning roller adjustable index (**32**) opposite the lug (**33**) using a **6 mm** Allen key, turning it anti-clockwise.
- ❑ Tighten the timing belt tensioning roller bolt.

K9K

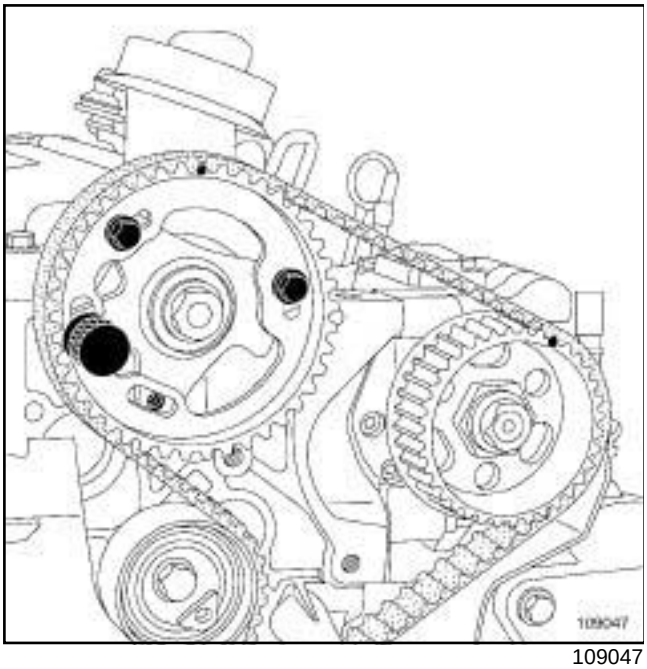

109047

❑

Note:

Check that the camshaft pulley hub bolts are not fully up against the camshaft pulley wheel.

K9K

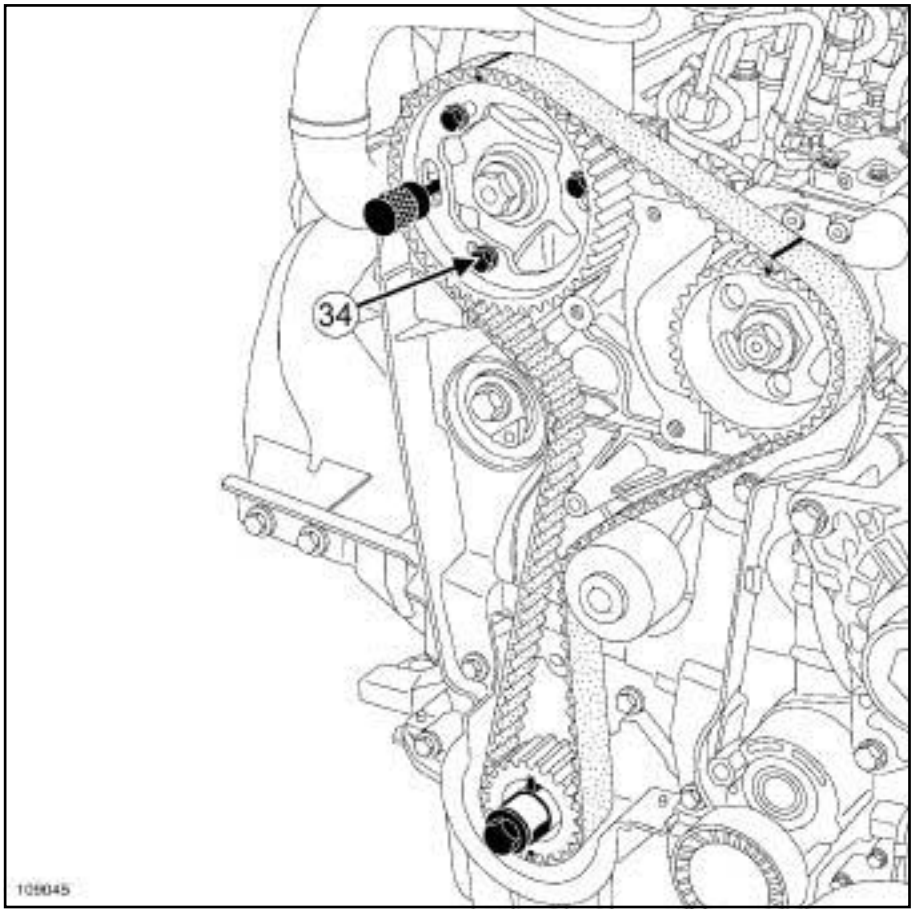

109045

- ❑ Refit the camshaft pulley hub lower bolt (**34**) .
- ❑ Tighten the camshaft pulley hub bolts.
- ❑ Remove:
  - the **(Mot. 1489)**,
  - the **(Mot. 1430)**.

K9K

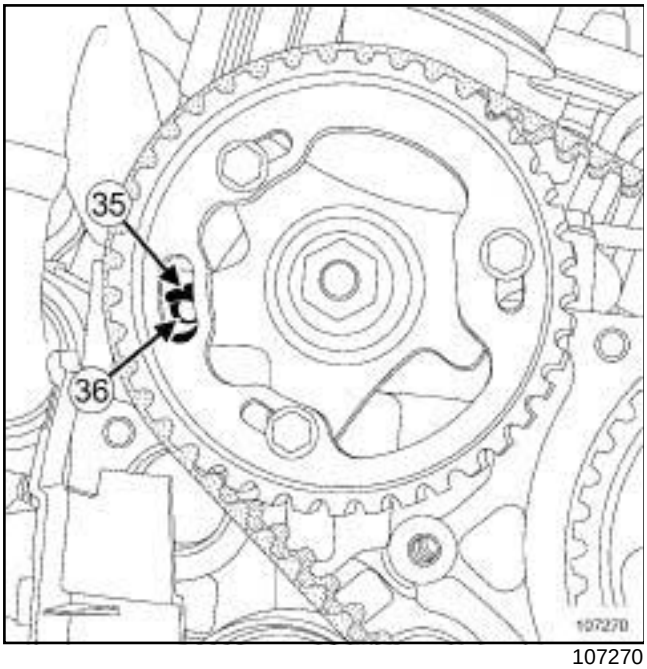

107270

❑ Turn the crankshaft two turns clockwise (timing end) using the old crankshaft accessories pulley bolt and its spacer until the hole (**35**) of the camshaft pulley hub is opposite the hole (**36**) in the cylinder head:

- screw tool **(Mot. 1489)** into the cylinder block,
- turn the crankshaft clockwise (timing end) smoothly using the old crankshaft accessories pulley bolt and its spacer, until the crankshaft comes into contact with the **(Mot. 1489)**.

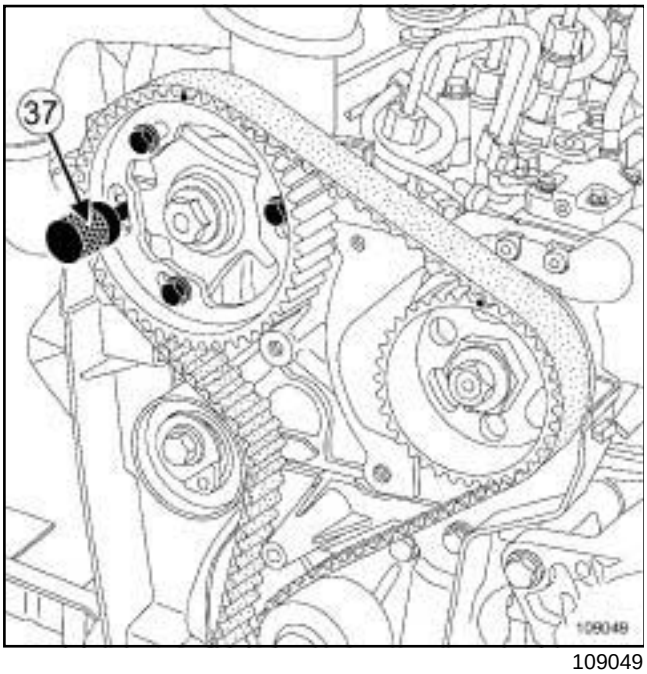

109049

❑ Set the camshaft pulley hub using the tool **(Mot. 1430)** (**37**) .

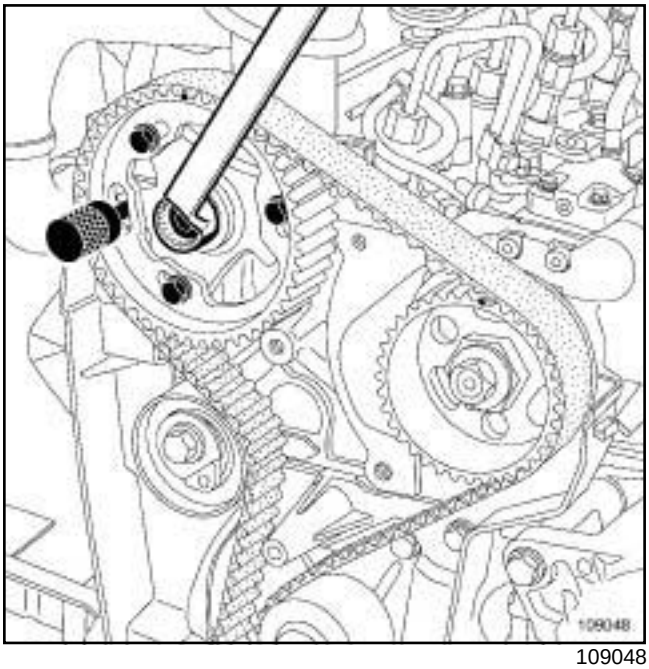

109048

❑

Note:

If the tool **(Mot. 1430)** does not engage correctly:

-loosen the camshaft pulley hub bolts by up to one turn,

-turn the camshaft pulley hub using an **18mm offset spanner** to set the camshaft pulley hub,

-do not retighten the camshaft pulley hub bolts.

❑ Loosen the camshaft pulley hub bolts by one turn.

Note:

After the two turns, the adjustable index of the tensioning roller may be in two different positions.

The rotation of the tension wheel eccentric depends on the position.

K9K

First position of the index of the timing belt tensioning roller

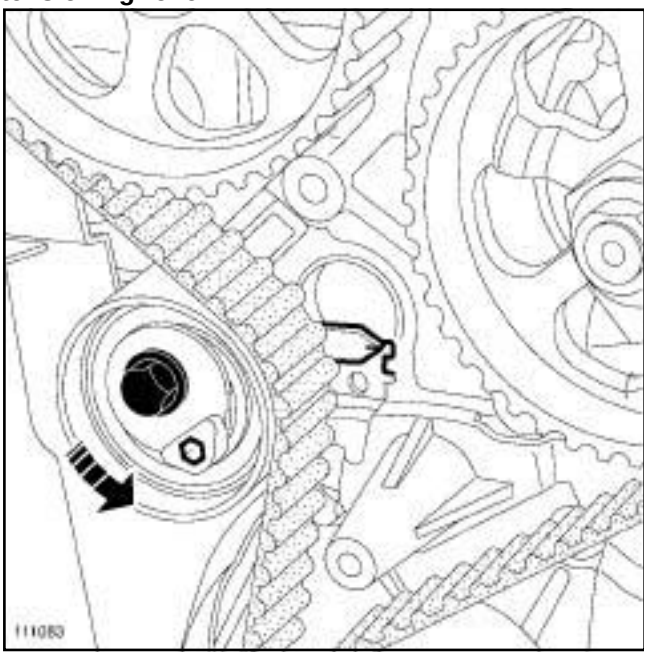

111083

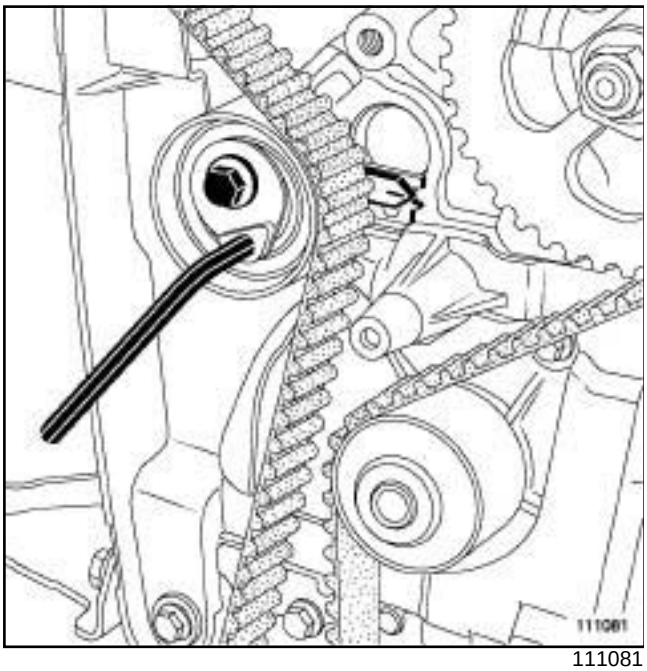

111081

- ❑ Loosen the timing belt tensioning roller bolt by up to one turn while holding the adjustable index with a **6 mm** Allen key.
- ❑ Gradually align the adjustable index of the timing belt tensioning roller in the middle of the timing window by turning the key anticlockwise.

Second position of the adjustable index of the timing belt tensioning roller

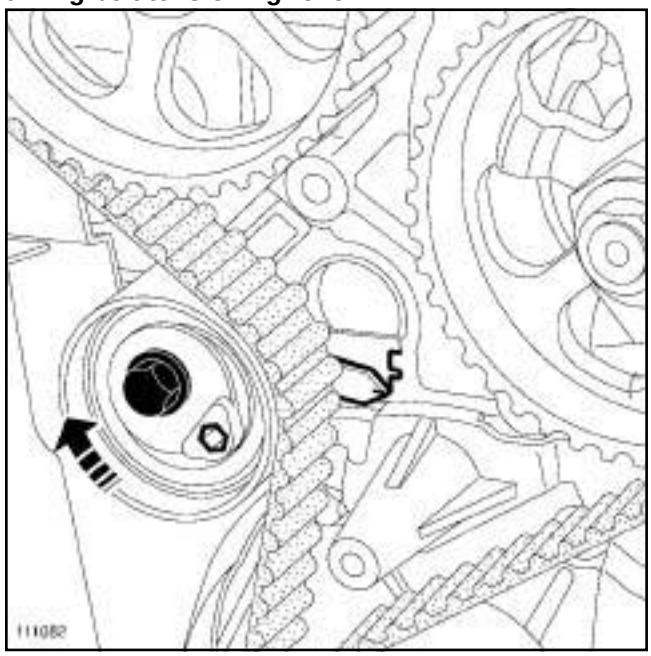

111082

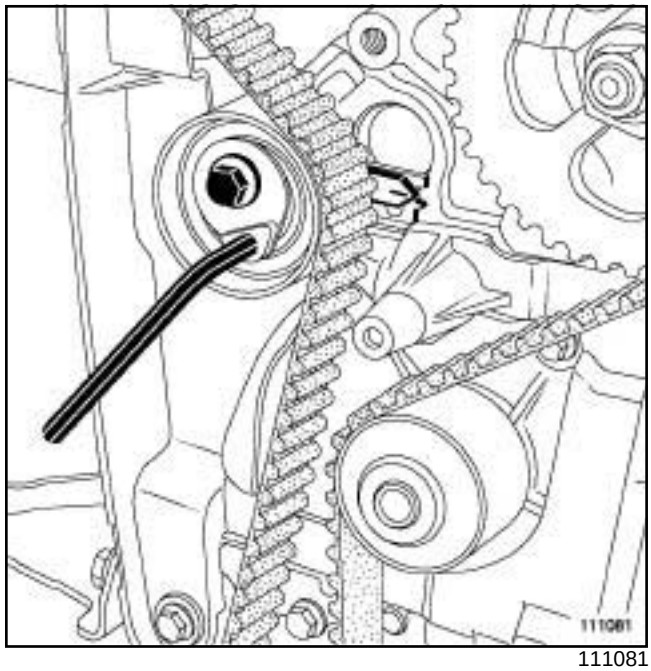

111081

- ❑ Loosen the timing belt tensioning roller bolt by up to one turn while holding the adjustable index with a **6 mm** Allen key.
- ❑ Gradually position the adjustable index of the timing belt tensioning roller in the middle of the timing window by turning the key clockwise.
- ❑ Tighten to torque:

  - the **timing belt tensioning roller bolt (27 N.m)**,

  - the **camshaft pulley hub bolts (14 N.m)**.

K9K

- Remove:
  - the **(Mot. 1489)**,
  - the **(Mot. 1430)**.
- Turn the crankshaft two turns clockwise (timing end) using the old crankshaft accessories pulley bolt and its spacer until the hole of the camshaft pulley hub is opposite the hole in the cylinder head.
- Screw tool **(Mot. 1489)** into the cylinder block.
- Turn the crankshaft clockwise (timing end) smoothly using the old crankshaft accessories pulley bolt and its spacer, until the crankshaft comes into contact with the tool **(Mot. 1489)**.

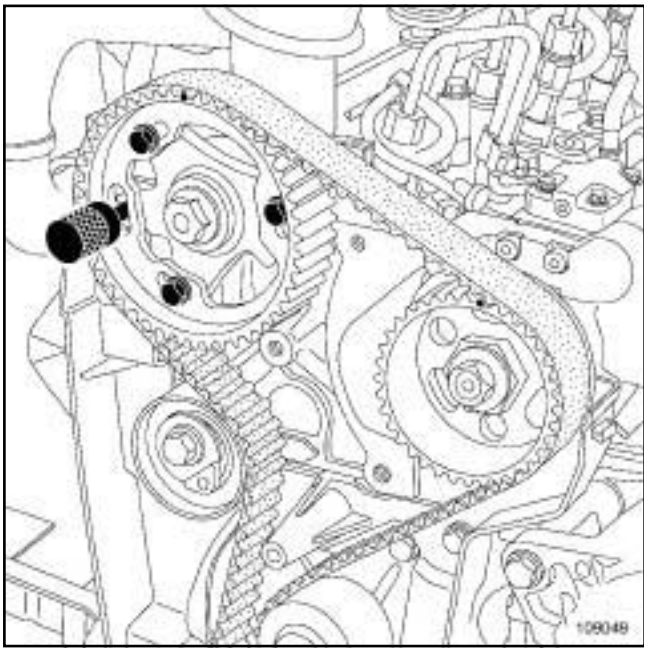

109049

- Set the camshaft pulley hub using the tool **(Mot. 1430)**.
- If the tool **(Mot. 1430)** does not engage, repeat the timing belt refitting operation.

III - FINAL OPERATION

- Refit the right-hand suspended mounting support.

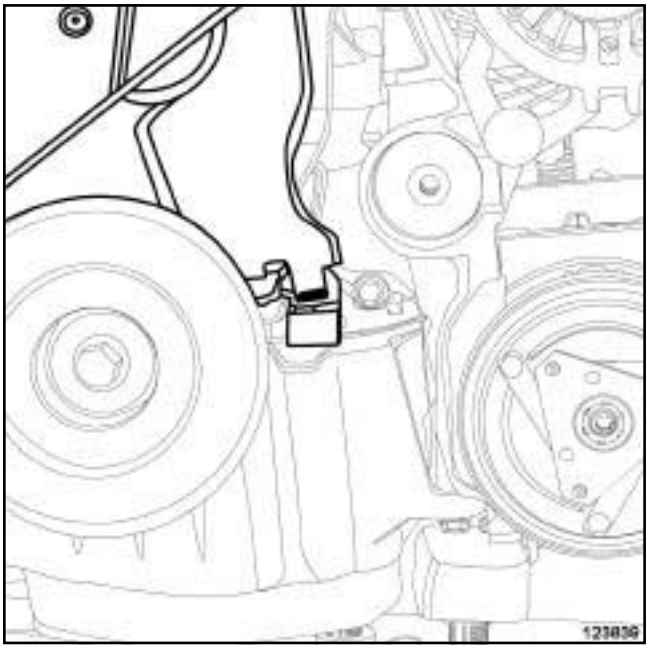

123839

- Refit the lower timing cover by positioning the lower timing cover tab in the inner cover opening.

K9K, and 832

- Clip on the lower timing cover.
- Refit the intermediate timing cover.
- Clip on the intermediate timing cover.
- Refit:
  - the intermediate timing cover bolt,
  - the upper timing cover.
- Clip on the upper timing cover.

K9K, and 830 or 834

- Clip on the lower timing cover.
- Refit:
  - the upper timing cover,
  - the upper timing cover bolt.
- Clip on the upper timing cover.

K9K

K9K, and 830

❑ Refit the camshaft position sensor (see **13B**, **Diesel injection**, **Camshaft position sensor: Removal - Refitting**, page **13B-19**) .

❑ Refit:

- the right-hand suspended engine mounting (see **19D**, **Engine mounting**, **Right-hand suspended engine mounting: Removal - Refitting**, page **19D-18**) ,
- the scoop under the scuttle panel grille (see **Scoop under scuttle panel grille: Removal - Refitting**) (56A, Exterior equipment),
- the scuttle panel grille (see **Scuttle panel grille: Removal - Refitting**) (56A, Exterior equipment),
- the windscreen wiper arms (see **Windscreen wiper arm: Removal - Refitting**) (85A, Wiping - Washing).

K9K, and 830

❑ Refit the lower engine tie-bar (see **19D**, **Engine mounting**, **Lower engine tie-bar: Removal - Refitting**, page **19D-33**) .

❑ Remove the old crankshaft accessories pulley bolt with its spacer.

❑ Refit:

- the crankshaft accessories pulley,
- a new crankshaft accessories pulley bolt.

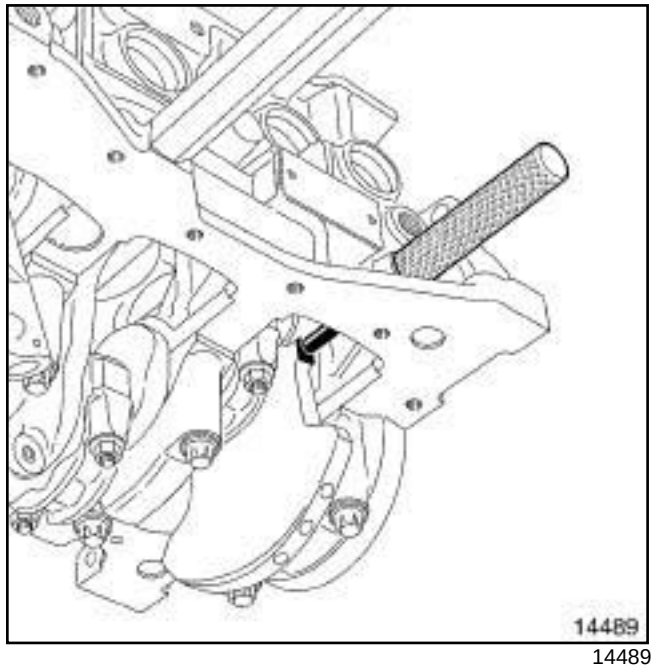

14489

❑ Turn the crankshaft clockwise (timing end) smoothly using the bolt of the crankshaft accessories pulley, until the crankshaft presses against the tool **(Mot. 1489)**.

❑ Torque tighten a **new crankshaft accessories pulley bolt (120 N.m + 95 ± 15°)**.

❑ Remove the tool **(Mot. 1489)**.

❑ Apply a drop of **SILICONE ADHESIVE SEALANT** (see **Vehicle: Parts and ingredients for the repairwork**) (04B, Consumables - Products) to the thread of the TDC setting pin plug.

❑ Torque tighten the **TDC setting pin plug (25 N.m)**.

❑ Refit:

- the accessories belt (see **11A**, **Top and front of engine**, **Accessories belt: Removal - Refitting**, page **11A-7**) ,
- the engine undertray,
- the front section of the front right-hand wheel arch liner (see **Front wheel arch liner: Removal - Refitting**) (55A, Exterior protection),
- the front right-hand wheel (see **Wheel: Removal - Refitting**) (35A, Wheels and tyres),
- the engine cover.

❑ Connect the battery (see **Battery : Removal - Refitting**) (80A, Battery).

F9Q

Essential special tooling	
Mot. 1054	TDC setting pin.

Tightening torques ▽	
timing tensioning roller bolts	**10 N.m**
timing tensioning roller nut	**25 N.m**
TDC pin plug	**25 N.m**

REMOVAL

I - REMOVAL PREPARATION OPERATION

❑ Position the vehicle on a two-post lift (see **Vehicle: Towing and lifting**) (02A, Lifting equipment).

❑ Disconnect the battery (see **Battery: Removal - Refitting**) (80A, Battery).

❑ Remove:

- the engine cover,
- the scuttle panel grille (see **Scuttle panel grille: Removal - Refitting**) (56A, Exterior equipment),
- the scoop under the scuttle panel grille (see **Scoop under scuttle panel grille: Removal - Refitting**) (56A, Exterior equipment),
- the engine undertray bolts,
- the engine undertray,
- the front right-hand wheel (see **Wheel: Removal - Refitting**) (35A, Wheels and tyres),
- the front right-hand wheel arch liner (see **Front wheel arch liner: Removal - Refitting**) (55A, Exterior protection),
- the accessories belt (see **11A**, **Top and front of engine**, **Accessories belt: Removal - Refitting**, page **11A-7**) ,
- the crankshaft accessories pulley (see **11A**, **Top and front of engine**, **Crankshaft accessories pulley: Removal - Refitting**, page **11A-15**) ,
- the lower engine tie-bar (see **19D**, **Engine mounting**, **Lower engine tie-bar: Removal - Refitting**, page **19D-33**) ,
- the right-hand suspended engine mounting (see **19D**, **Engine mounting**, **Right-hand suspended engine mounting: Removal - Refitting**, page **19D-18**) .

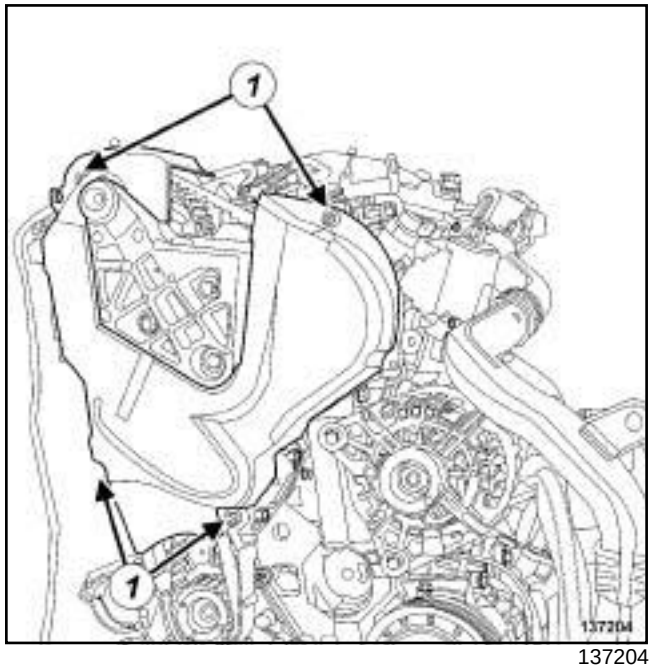

137204

❑ Remove:

- the timing cover bolts (**1**) ,
- the timing cover.

Adjusting the timing

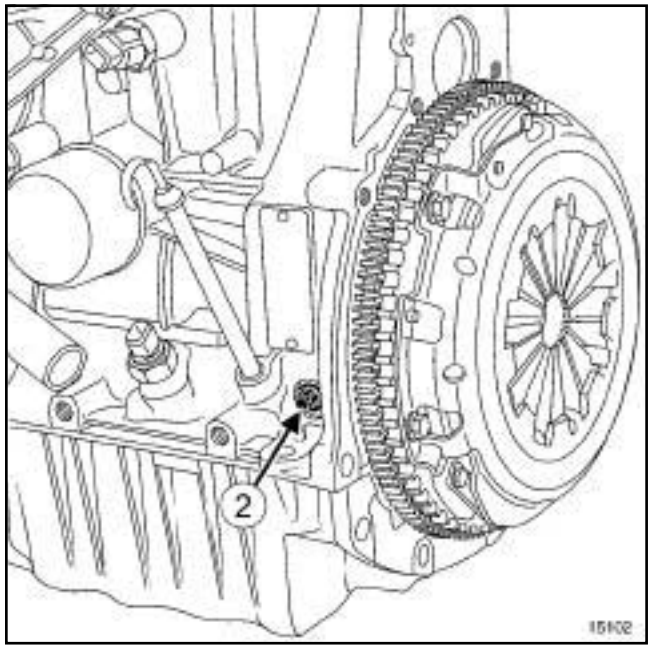

15102

❑ Remove the TDC setting pin plug (**2**) .

❑ Fit the **(Mot. 1054)** without inserting it fully.

F9Q

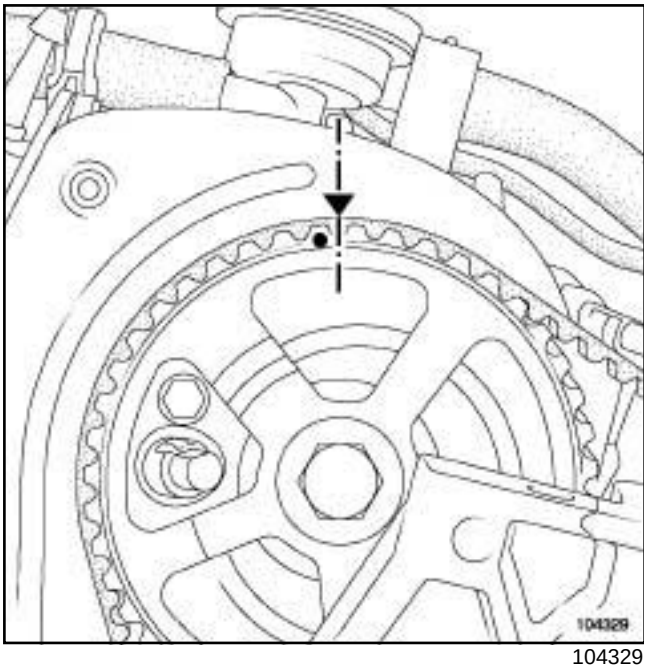

104329

❑ Rotate the crankshaft in a clockwise direction at the timing end.

❑ Bring the camshaft pulley mark to half a tooth before the mark on the inner timing cover.

❑ Push the TDC setting pin **(Mot. 1054)**.

❑ Turn the crankshaft clockwise (timing end) until the crankshaft is set.

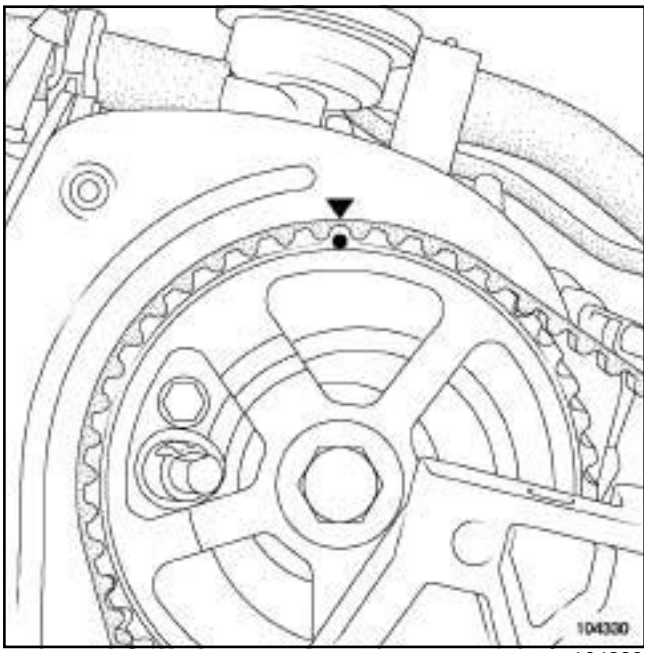

104330

❑ The camshaft pulley mark should be aligned with the inner timing cover mark.

II - OPERATION FOR REMOVAL OF PART CONCERNED

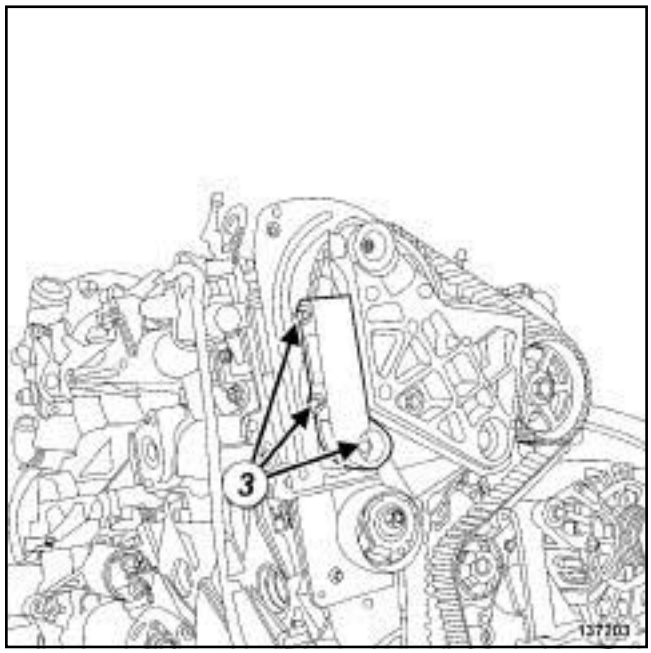

137203

❑ Remove:

- the bolts (**3**) of the high pressure pump support bracket,
- the high pressure pump support bracket.

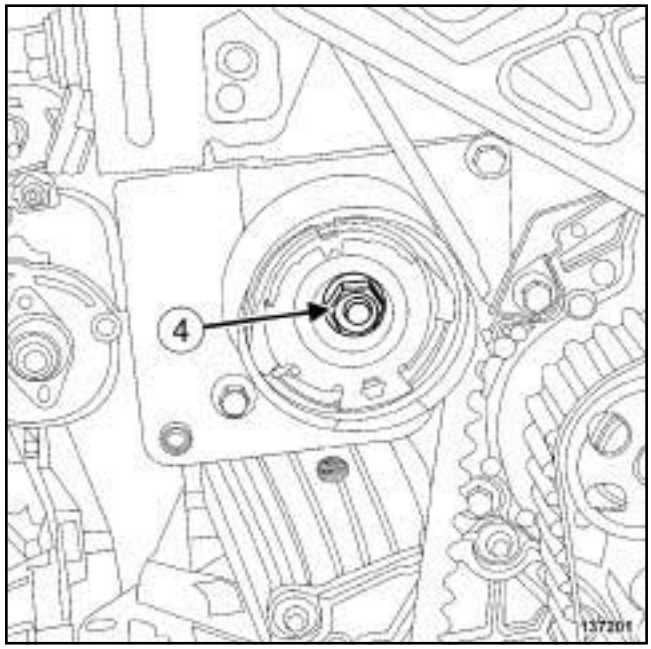

137201

❑ Undo the timing tension wheel nut (**4**) .

❑ Remove the timing belt.

F9Q

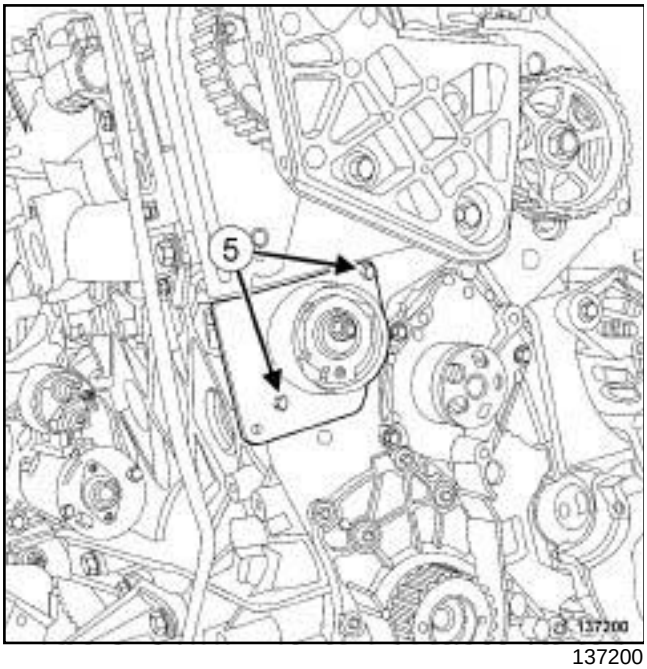

137200

❑ Remove:

- the bolts (**5**) of the timing tensioning roller,
- the timing tensioning roller.

REFITTING

I - REFITTING PREPARATION OPERATION

❑ **parts always to be replaced: Timing belt (10,02, 04,02)**,

parts always to be replaced: Timing belt tensioning roller (10,02,04,04).

II - REFITTING OPERATION FOR PART CONCERNED

❑ Refit:

- the new timing belt tensioning roller,
- a new timing belt.

❑ Torque tighten the **timing tensioning roller bolts (10 N.m)**.

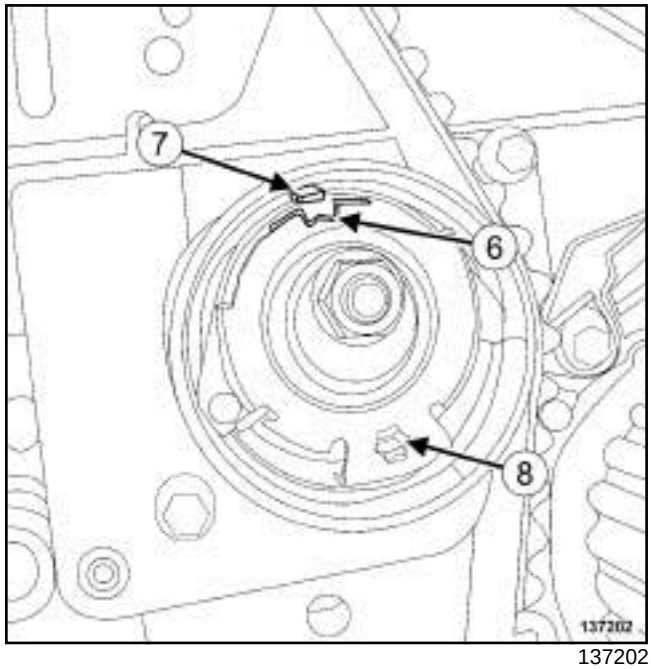

137202

❑ Using a Torx wrench, bring the adjustable index (**6**) opposite the mark (**7**) by turning the eccentric (**8**) anti-clockwise.

❑ Torque tighten the **timing tensioning roller nut (25 N.m)**

❑ Remove the tool **(Mot. 1054)**.

❑ Rotate the crankshaft clockwise through four revolutions.

❑ Check that the adjustable index (**6**) is opposite the mark (**7**) , if this is not the case:

- loosen the timing tensioning roller nut by up to one turn while holding the eccentric with a Torx wrench,
- gradually move the adjustable index (**6**) opposite the mark (**7**) by turning the eccentric (**8**) clockwise.

F9Q

Check

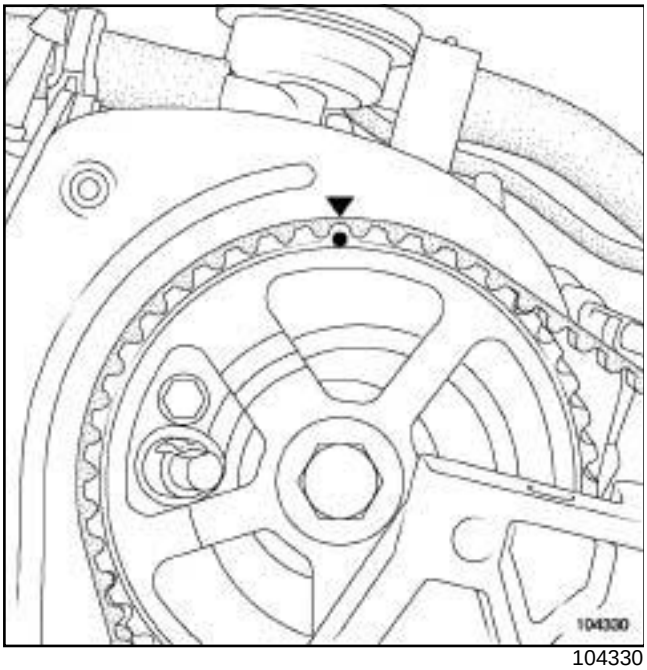

104330

❑ Check that the camshaft pulley mark is still aligned with the inner timing cover mark.

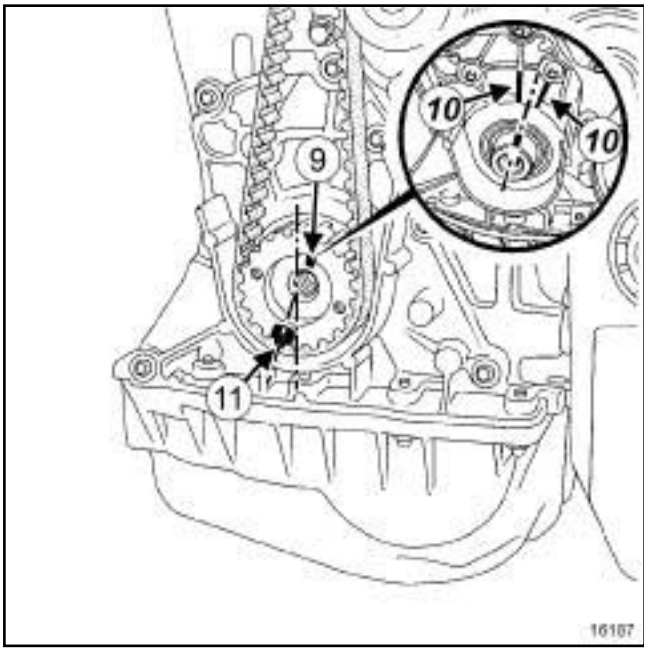

16187

❑ Check that the crankshaft is correctly centred:

- the crankshaft groove (**9**) should be in the middle of the two crankshaft closure cover ribs (**10**) ,
- the crankshaft timing sprocket mark (**11**) should be set one tooth to the left of the engine's vertical axis.

❑ Refit the high pressure pump support bracket.

III - FINAL OPERATION

❑ Apply a drop of **SILICONE ADHESIVE SEALANT** (see **Vehicle: Parts and ingredients for the repairwork**) (04B, Consumables - Products) to the TDC setting pin plug.

❑ Refit the TDC pin plug.

❑ Torque tighten the **TDC pin plug (25 N.m)**.

❑ Refit:

- the timing cover,
- the right-hand suspended engine mounting (see **19D**, **Engine mounting**, **Right-hand suspended engine mounting: Removal - Refitting**, page **19D-18**) ,
- the lower engine tie-bar (see **19D**, **Engine mounting**, **Lower engine tie-bar: Removal - Refitting**, page **19D-33**) ,
- the crankshaft accessories pulley (see **11A**, **Top and front of engine**, **Crankshaft accessories pulley: Removal - Refitting**, page **11A-15**) ,
- the accessories belt (see **11A**, **Top and front of engine**, **Accessories belt: Removal - Refitting**, page **11A-7**) ,
- the front right-hand wheel arch liner (see **Front wheel arch liner: Removal - Refitting**) (55A, Exterior protection),
- the front right-hand wheel (see **Wheel: Removal - Refitting**) (35A, Wheels and tyres),
- the engine undertray,
- the scoop under the scuttle panel grille (see **Scoop under scuttle panel grille: Removal - Refitting**) (56A, Exterior equipment),
- the scuttle panel grille (see **Scuttle panel grille: Removal - Refitting**) (56A, Exterior equipment),
- the engine cover.

❑ Connect the battery (see **Battery : Removal - Refitting**) (80A, Battery).

F4R

Essential special tooling	
Mot. 1453	Multiple-adjusting engine mounting support with retaining straps.
Mot. 1453-01	Additional winder nut on engine lift support Mot. 1453.
Mot. 1054	TDC setting pin.
Mot. 1496	Tool for setting camshaft.
Mot. 1801	Camshaft sprocket locking tool - F4 engine.
Mot. 1487	Tool for removing the camshaft covers (57 mm diameter).
Mot. 1488	Tool for removing the camshaft covers (43 mm diameter).

Essential equipment
safety strap(s)

Tightening torques ▽	
fixed roller bolt	**50 N.m**
tensioning roller nut (initial torque)	**32 N.m**
toothed sprocket nuts	**80 N.m**
old inlet camshaft dephaser bolt	**30 N.m**
old exhaust camshaft pulley nut	**30 N.m**
tensioning roller nut	**32 N.m**
toothed sprocket nuts	**80 N.m**
new bolt on the camshaft dephaser	**100 N.m**
new nut on the exhaust camshaft pulley	**30 N.m**
exhaust camshaft pulley nut	**86° ± 6°**

Tightening torques ▽	
camshaft dephaser blanking cover	**25 N.m**
the clip of the turbocharger air outlet pipe	**6 N.m**

REMOVAL

I - REMOVAL PREPARATION OPERATION

❑ Position the vehicle on a lift (see **Vehicle: Towing and lifting**) (02A, Lifting equipment).

❑ Remove:

- the engine cover,
- the battery (see **Battery: Removal - Refitting**) (80A, Battery),
- the battery tray (see **Battery tray: Removal - Refitting**) (80A, Battery),
- the engine undertray bolts,
- the engine undertray,
- the front wheels (see **Wheel: Removal - Refitting**) (35A, Wheels and tyres),
- the front section of the front wheel arch liners (see **Front wheel arch liner: Removal - Refitting**) (55A, Exterior protection),
- the front bumper (see **Front bumper: Removal - Refitting**) (55A, Exterior protection),
- the radiator mounting cross member (see **Radiator support cross member: Removal - Refitting**) (31A, Front axle components),
- the accessories belt (see **11A**, **Top and front of engine**, **Accessories belt: Removal - Refitting**, page **11A-7**) ,
- the crankshaft accessories pulley (see **11A**, **Top and front of engine**, **Crankshaft accessories pulley: Removal - Refitting**, page **11A-15**) ,
- the lower engine tie-bar (see **19D**, **Engine mounting**, **Lower engine tie-bar: Removal - Refitting**, page **19D-33**) .

F4R

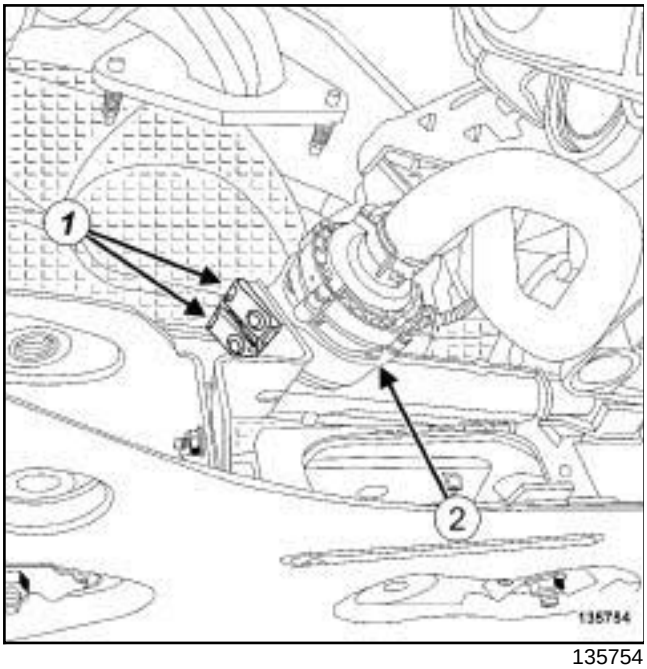

135754

❑ Remove the clips (**1**) from the electric coolant pump (**2**) .

❑ Move aside the electric coolant pump.

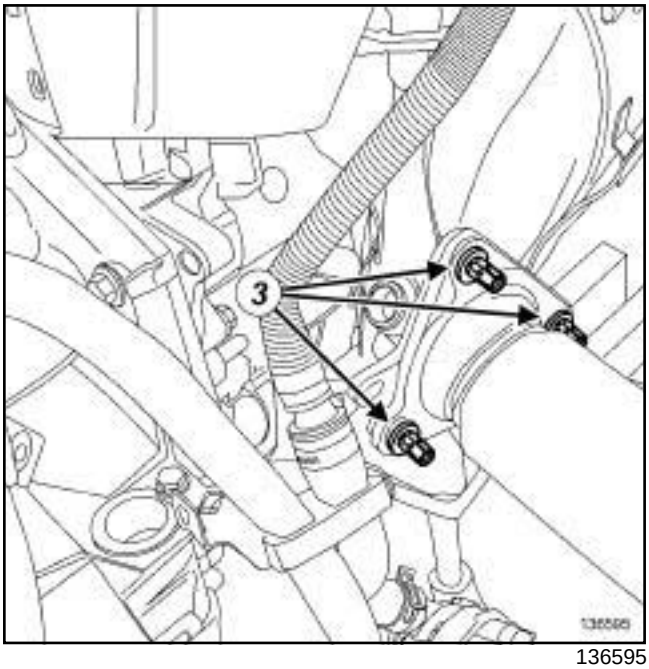

136595

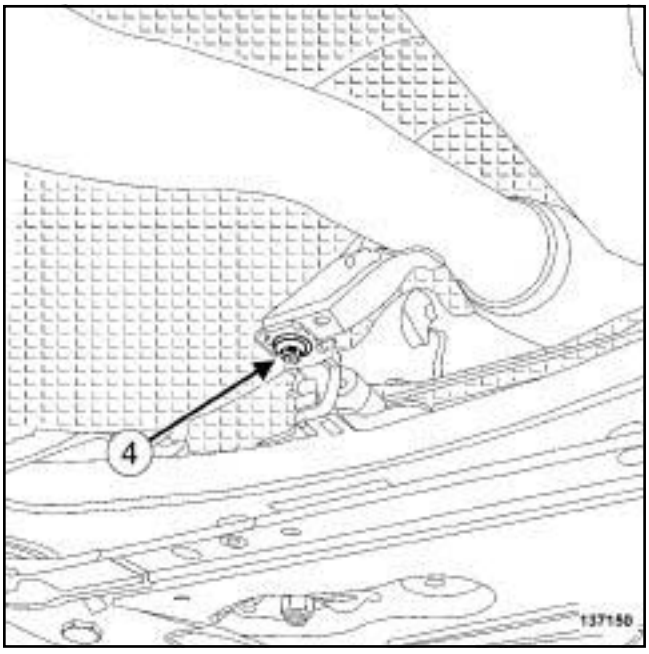

137150

❑ Remove:

- the nuts (**3**) from the exhaust connecting hose,
- the rubber mounting bush retaining bolt (**4**) from the exhaust hose,
- the connecting hose seal.

❑ Move aside the connecting hose.

❑ Remove:

- the windscreen wiper arms (see **Windscreen wiper arm: Removal - Refitting**) (85A, Wiping - Washing),

F4R

- the scuttle panel grille (see **Scuttle panel grille: Removal - Refitting**) (56A, Exterior equipment),
- the scoop under the scuttle panel grille (see **Scoop under scuttle panel grille: Removal - Refitting**) (56A, Exterior equipment).

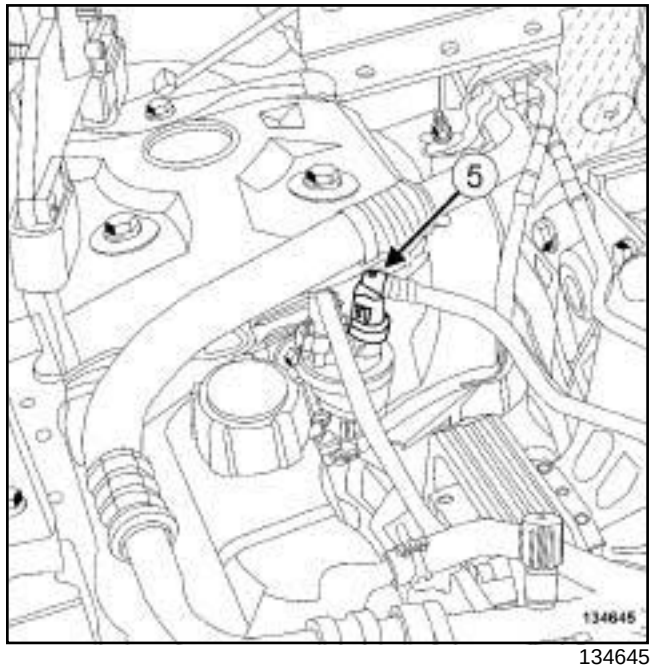

134645

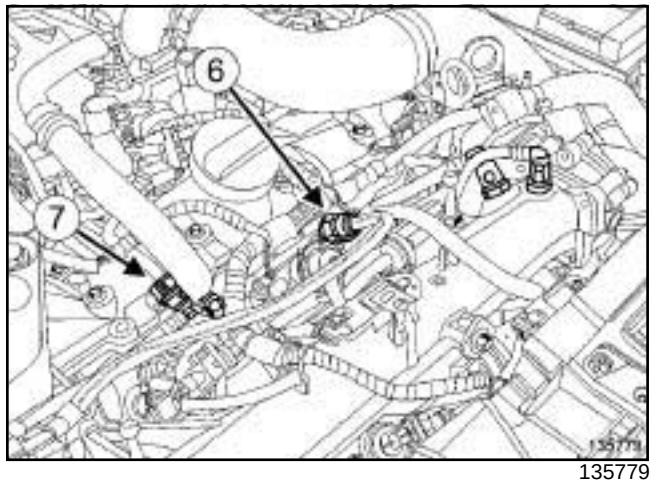

135779

❑ Disconnect:

- the pipe (**5**) on the petrol vapour rebreathing solenoid valve,
- the fuel supply pipe (**6**) on the injector rail,
- the petrol vapour rebreathing pipe at (**7**) .

WARNING
To prevent impurities from entering the circuit, place protective plugs on all fuel circuit components exposed to the open air.

❑ Insert the blanking plugs.

❑ Unclip the pipes on the right-hand suspended engine mounting cover.

F4R

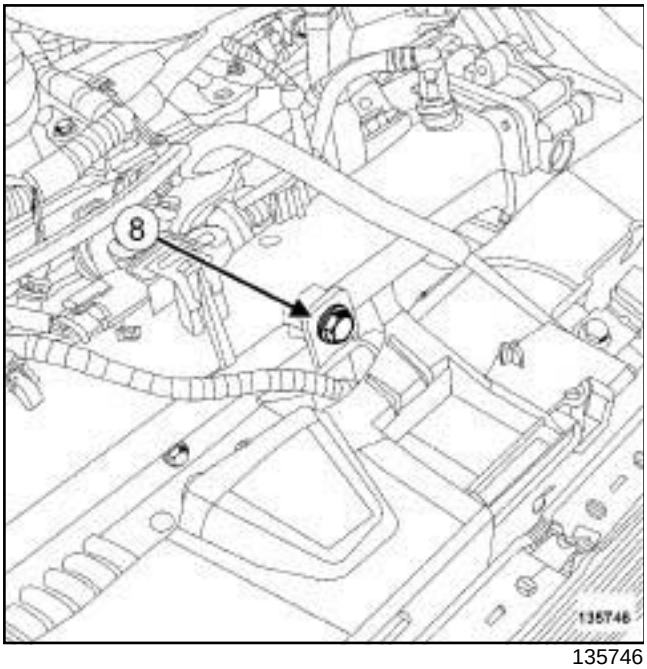

135746

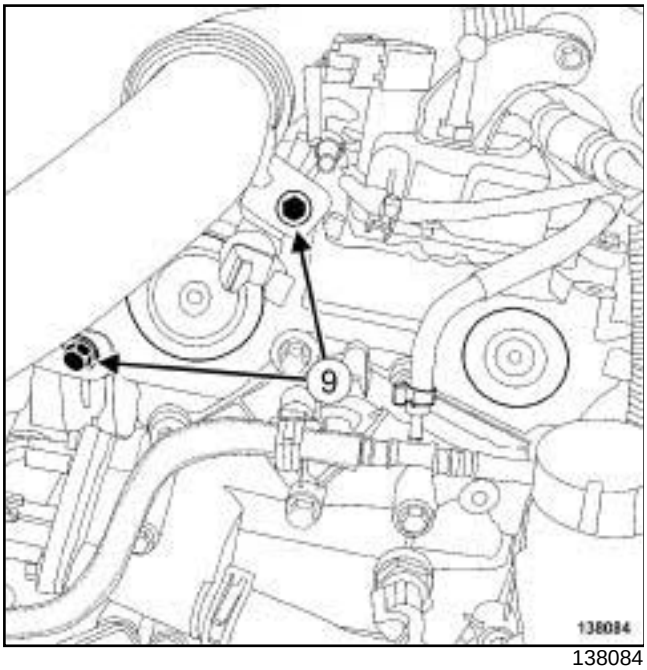

138084

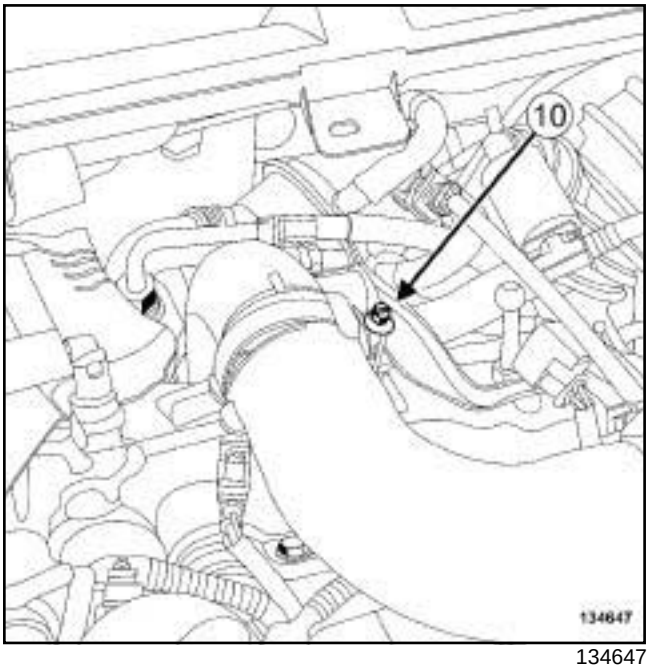

134647

❑ Remove:

- the bolt (**8**) from the air pipe on the intake distributor,
- the retaining bracket bolts (**9**) on the turbocharger air outlet pipe.

❑ Loosen the clip (**10**) on the intercooler outlet air pipe.

❑ Disconnect the turbocharger air outlet pipe.

❑ Move aside the turbocharger air outlet pipe.

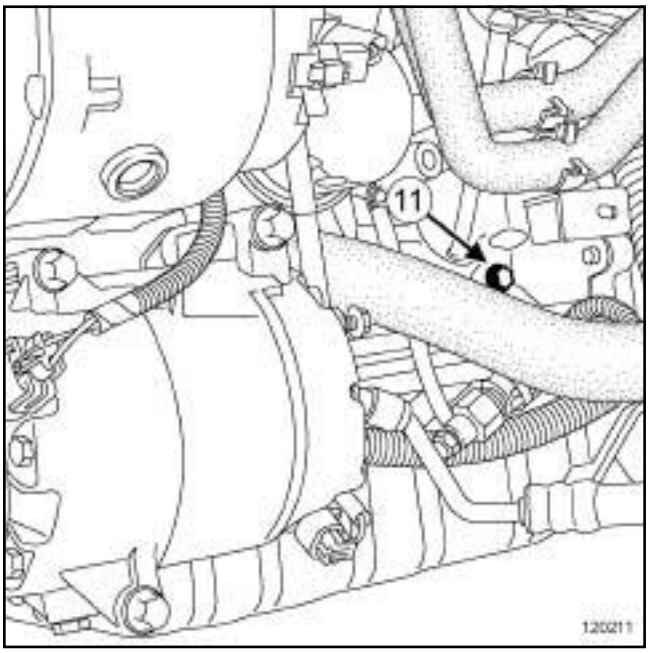

120211

❑ Remove the plug (**11**) from the TDC setting pin.

F4R

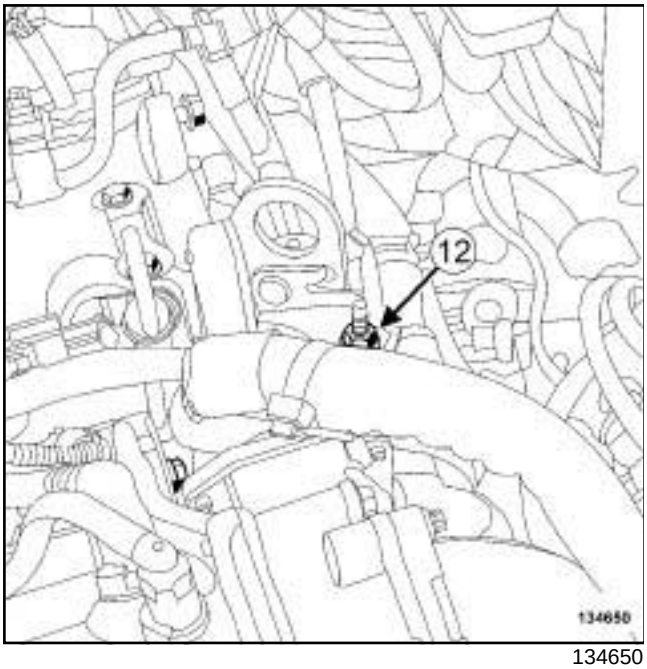

134650

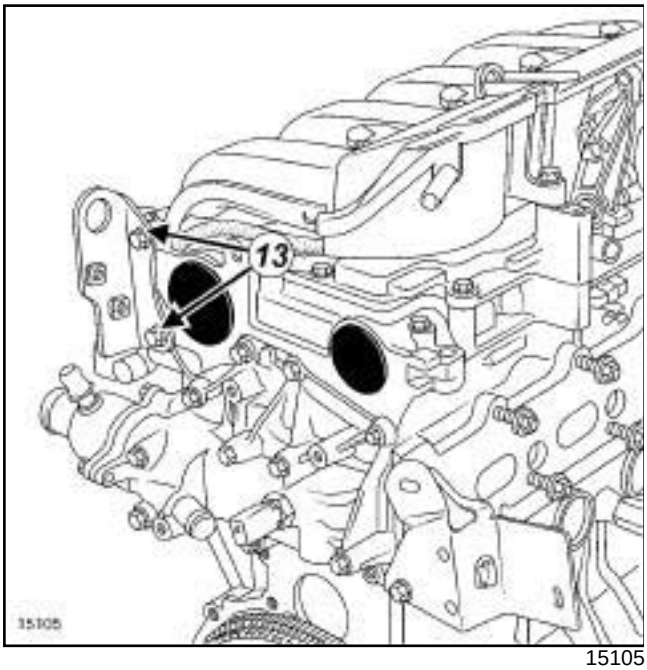

15105

❑ Remove the nut (**12**) from the engine wiring on the gearbox side lifting eye.

❑ Move aside the engine wiring.

❑ Remove:

- the gearbox side lifting eye bolts (**13**) ,
- the gearbox side lifting eye.

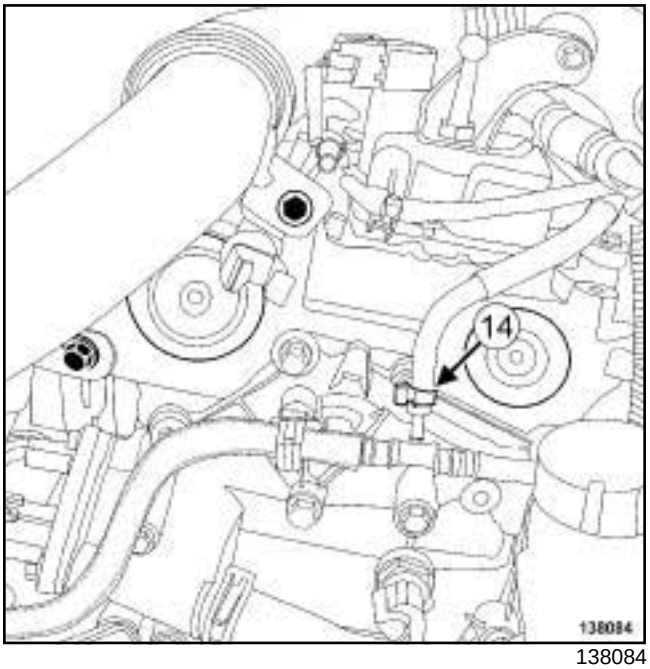

138084

❑ Unclip the turbocharger vacuum pipe clip (**14**) .

❑ Disconnect the vacuum pipe from the turbocharger.

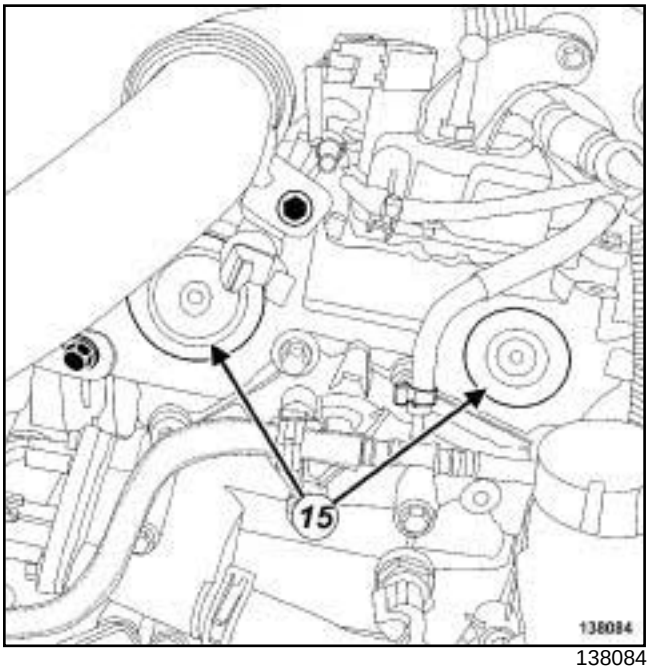

138084

❑ Pierce the centre of the plugs (**15**) at the camshaft ends with a screwdriver.

❑ Remove the caps from the camshaft ends with a screwdriver.

F4R

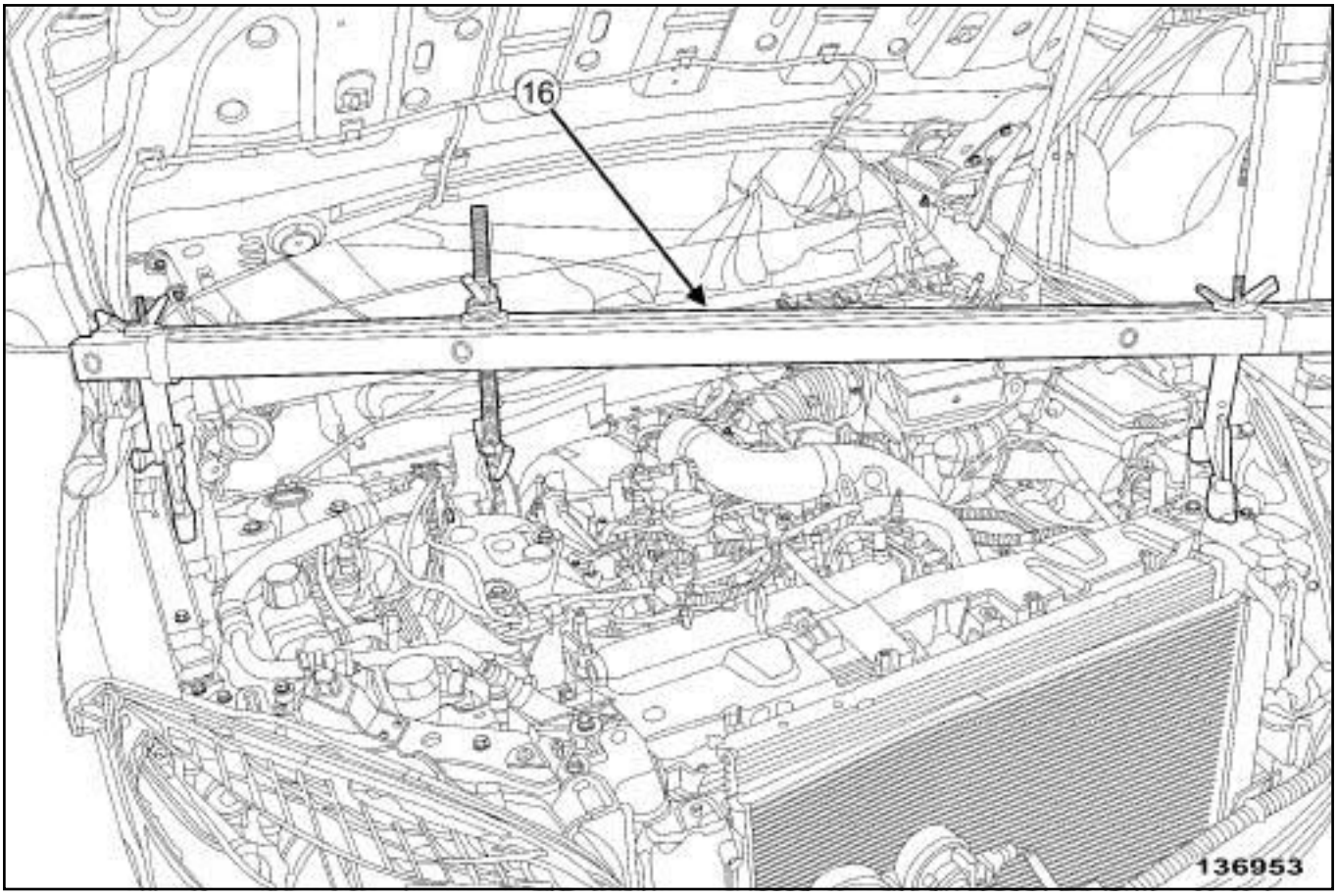

136953

- Fit the tool **(Mot. 1453)** equipped with the tool **(Mot. 1453-01)** with a **safety strap(s)** (**16**)
- Remove the right-hand suspended engine mounting (see **19D**, **Engine mounting**, **Right-hand suspended engine mounting: Removal - Refitting**, page **19D-18**) .

F4R

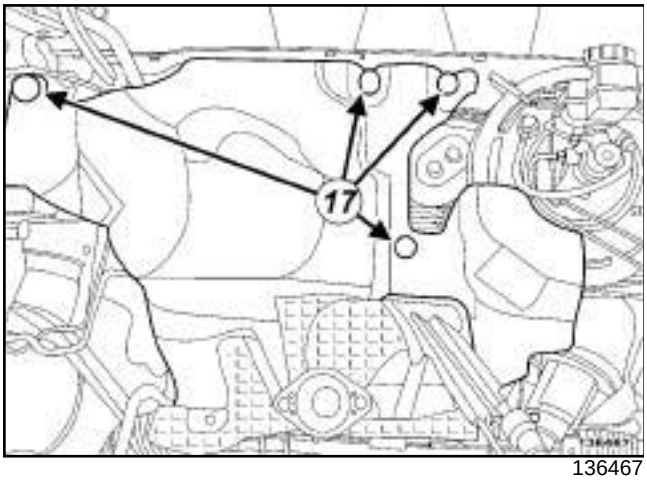

136467

❑ Remove the bolts (**17**) from the bulkhead heat shield.

> **WARNING**
>
> To prevent the surrounding components from overheating, do not damage (tear, pierce, bend, etc.) a heat shield.
>
> Any damaged heat shields must be replaced.

❑ Move the bulkhead heat shield to one side.

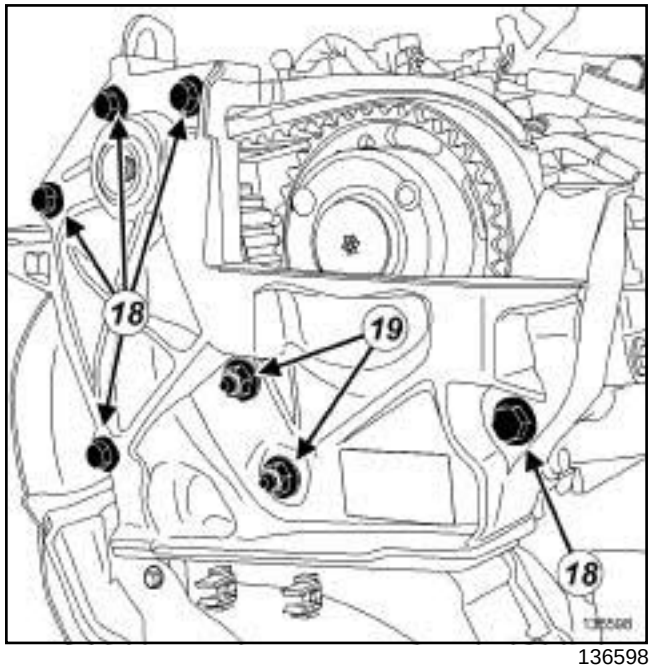

136598

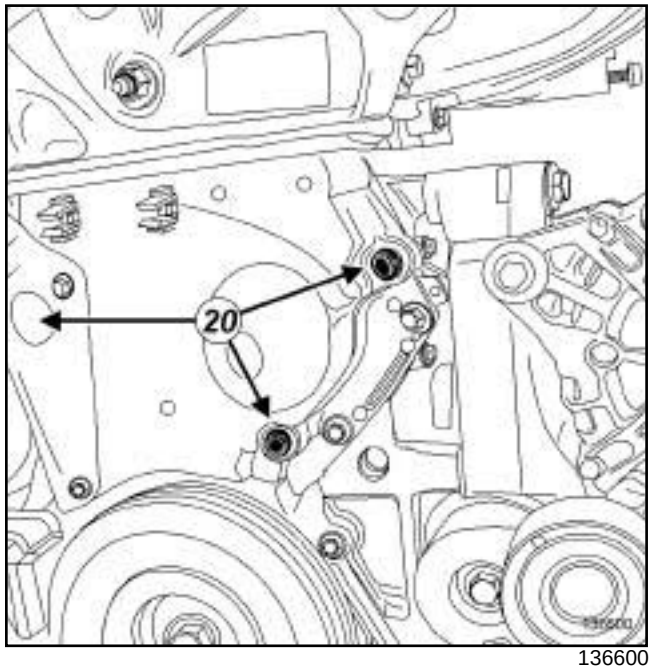

136600

❑ Remove:

- the bolts (**18**) from the upper timing cover,
- the upper timing cover nuts (**19**) ,
- the upper timing cover,
- the bolts (**20**) on the lower timing cover,
- the lower timing cover.

F4R

II - OPERATION FOR REMOVAL OF PART CONCERNED

Adjusting the timing

❑ Refit:

- the crankshaft accessories pulley,
- the crankshaft accessories pulley bolt.

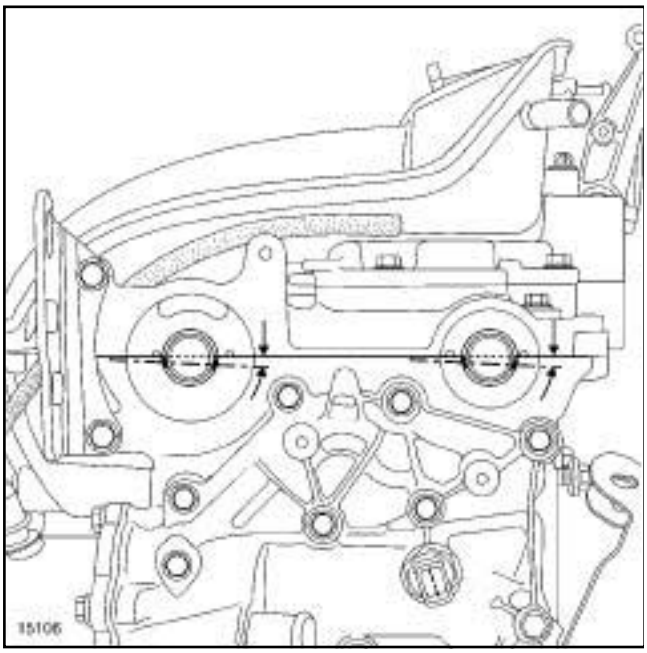

15106

❑ Rotate the engine clockwise (timing end) so that the camshaft grooves are offset below the centre line and almost horizontal.

Position of TDC pin before setting point

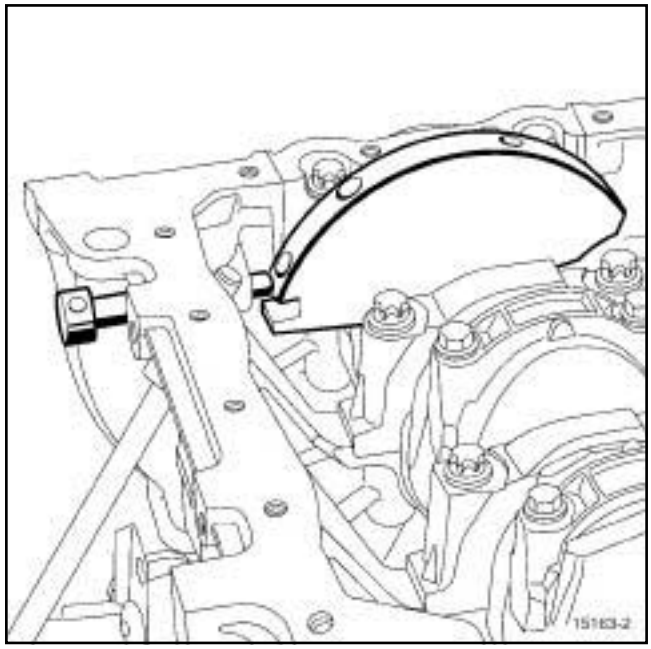

15163-2

Position of TDC pin setting point

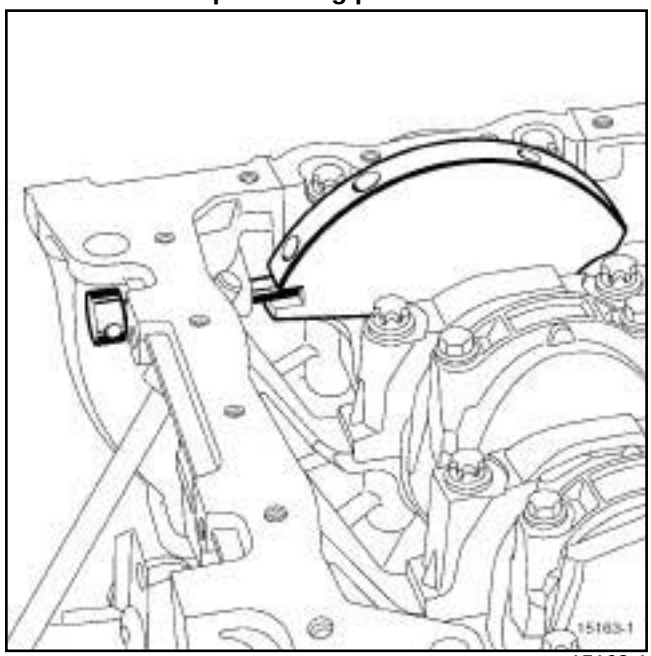

15163-1

❑ Insert the TDC setting pin **(Mot. 1054)** and rotate the engine slightly clockwise (timing end) until the setting point is reached.

F4R

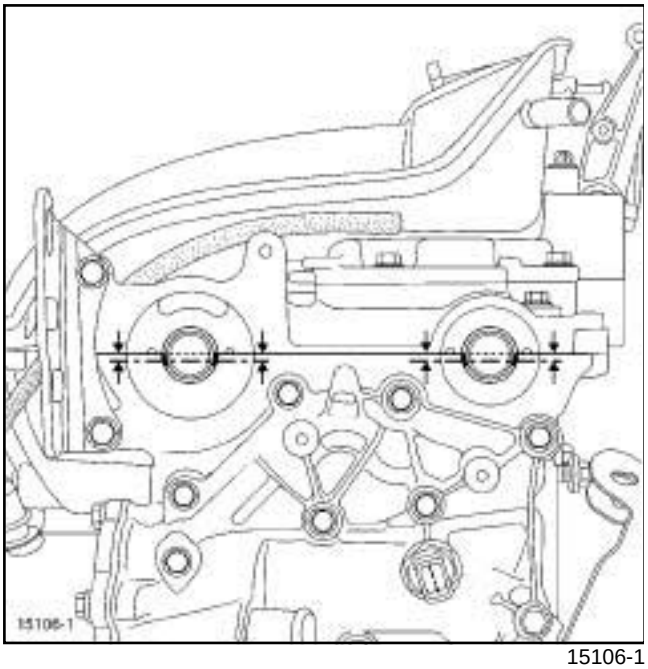

15106-1

❑ At the setting point the camshaft grooves must be horizontal and offset below the centre line.

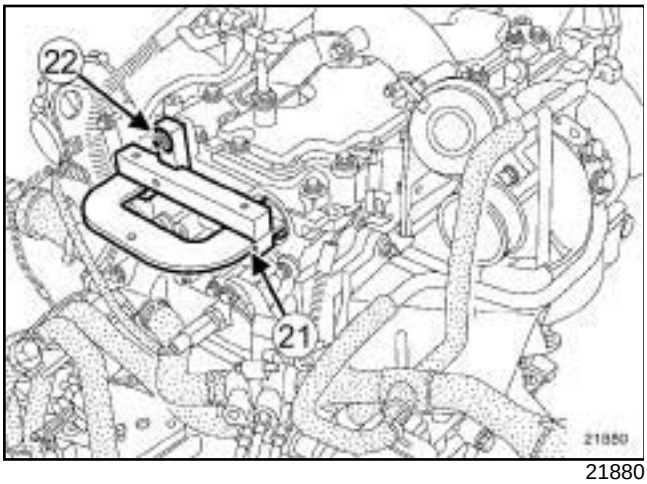

21880

❑ Position the **(Mot. 1496)** (**21**) on the ends of the camshafts.

❑ Lock the **(Mot. 1496)** using a bolt (**22**) .

❑ Remove:

- the crankshaft accessories pulley bolt,
- the crankshaft accessories pulley.

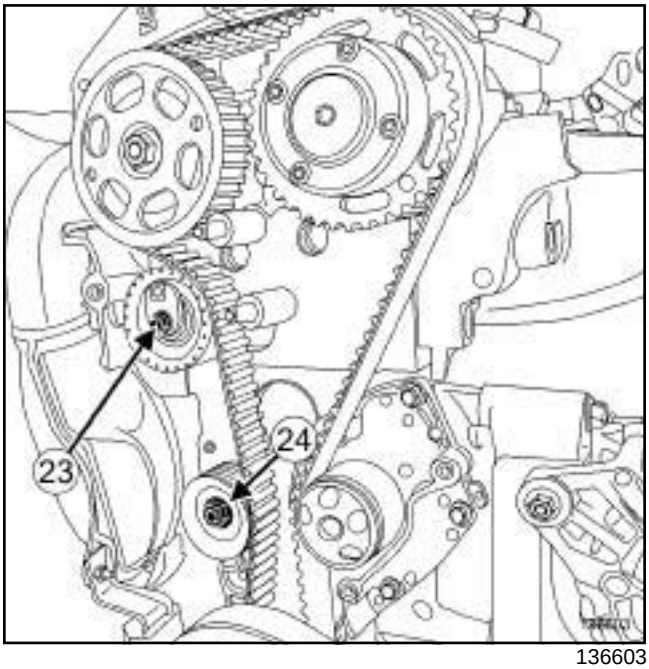

136603

❑ Slacken the timing belt by undoing the tensioning roller nut (**23**) .

❑ Remove:

- the tensioning roller nut,
- the tensioning roller,
- the fixed roller bolt (**24**) ,
- the fixed roller and its spacer,
- the timing belt,
- the crankshaft timing sprocket.

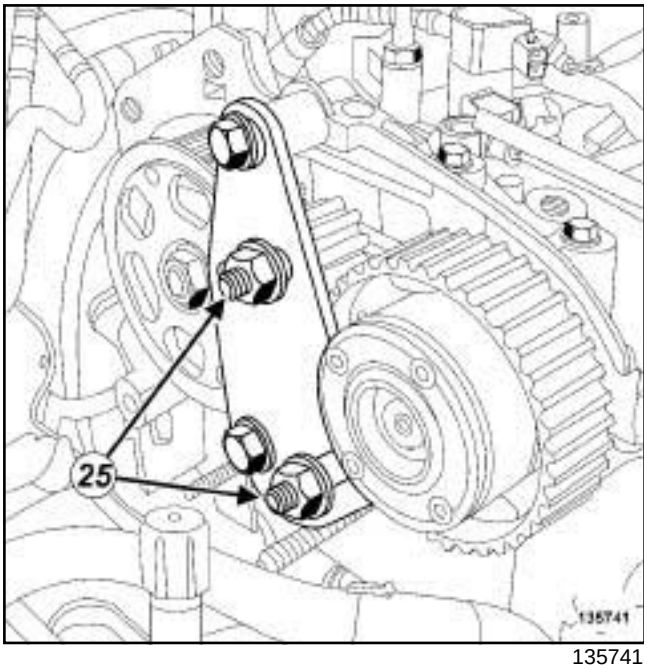

135741

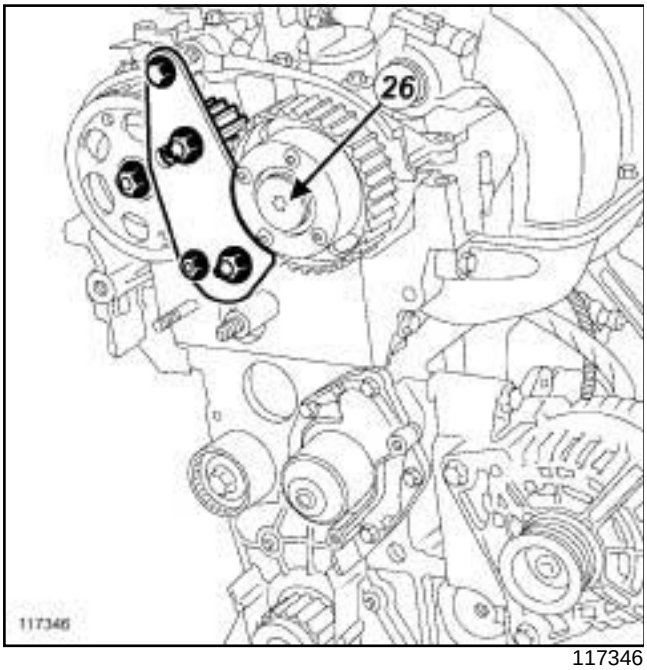

117346

❑ Immobilise the camshafts using the camshaft locking tool **(Mot. 1801)** while tightening the nuts (**26**) .

❑ Remove the blanking cover (**26**) from the inlet camshaft dephaser using a **50 mm** torx wrench.

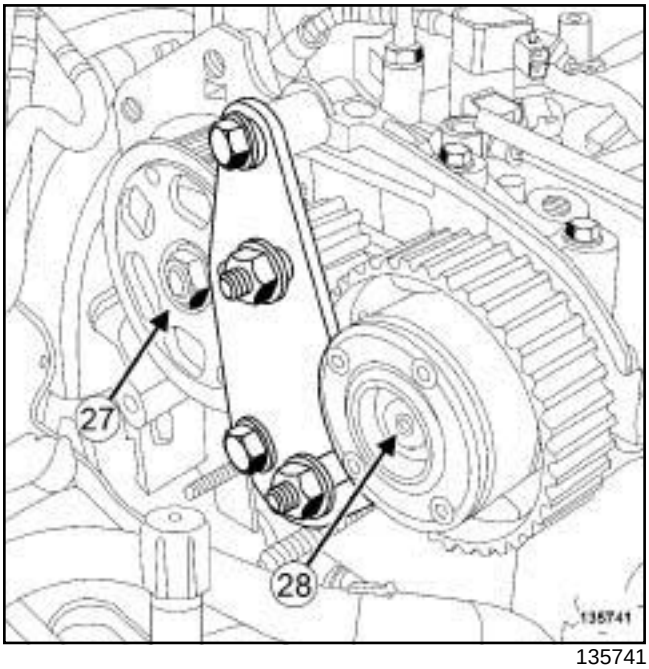

135741

❑ Remove:

- the exhaust camshaft pulley nut (**27**) ,
- the inlet camshaft dephaser bolt (**28**) .

❑ Remove the **(Mot. 1801)**.

❑ Remove:

- the exhaust camshaft pulley.
- the camshaft dephaser (see **11A**, **Top and front of engine**, **Camshaft dephaser: Removal - Refitting**, page **11A-177**) .

REFITTING

I - REFITTING PREPARATION OPERATION

❑ **parts always to be replaced: Timing belt (10,02, 04,02)**.

❑ **parts always to be replaced: Timing belt tensioning roller (10,02,04,04)**.

❑ **parts always to be replaced: Timing fixed roller (10,02,04,05)**.

❑ **parts always to be replaced: Inlet camshaft cap (10,02,02,11)**.

❑ **parts always to be replaced: Exhaust camshaft cap (10,02,02,12)**.

❑ **parts always to be replaced: Exhaust camshaft pulley nut (10,02,02,13)**.

❑ **parts always to be replaced: Camshaft dephaser sprocket bolt (10,02,02,19)**.

F4R

❑ **parts always to be replaced: seal between catalytic converter and exhaust downpipe hose (10, 08,02,21)**.

II - REFITTING OPERATION FOR PART CONCERNED

1 - 1 - Adjusting the timing

❑

Note:

If the exhaust camshaft stud is loosened (see **11A**, **Top and front of engine**, **Camshaft: Removal - Refitting**, page **11A-114**) (see Technical Note 3884A, Replacement of F4 camshaft pulley studs).

WARNING

Always degrease:

- the end of the crankshaft (timing end),
- the timing sprocket bore and bearing faces,
- the crankshaft accessories pulley bearing faces,
- the camshaft ends (timing end),
- the camshaft sprocket bores and bearing faces.

This is to avoid timing slippage.

This slippage leads to engine damage.

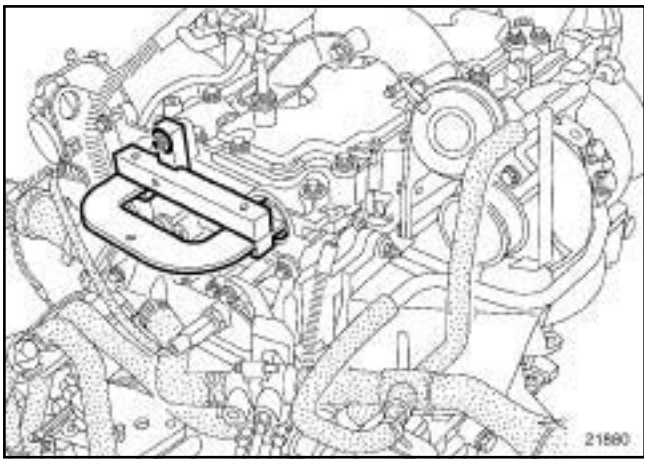

21880

❑ Check that camshaft setting tool **(Mot. 1496)** is still in place.

Position of pin setting point

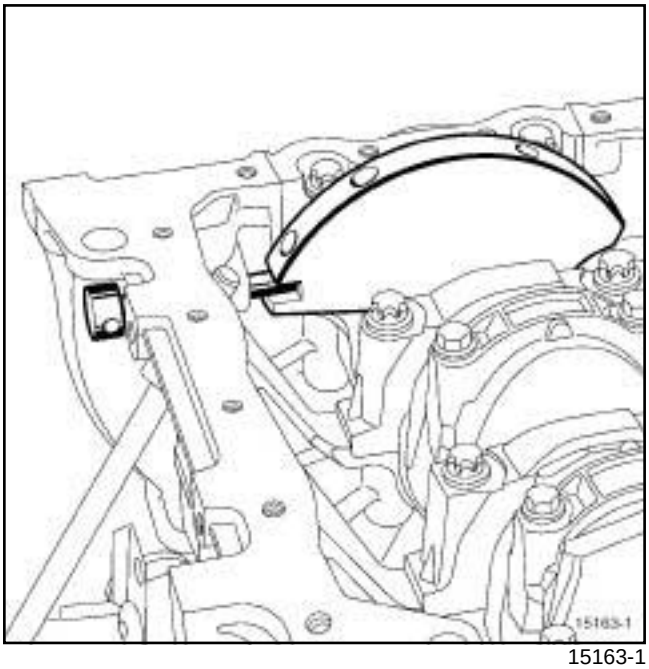

15163-1

❑ Check that the TDC pin **(Mot. 1054)** is still in place and that the crankshaft is set.

F4R

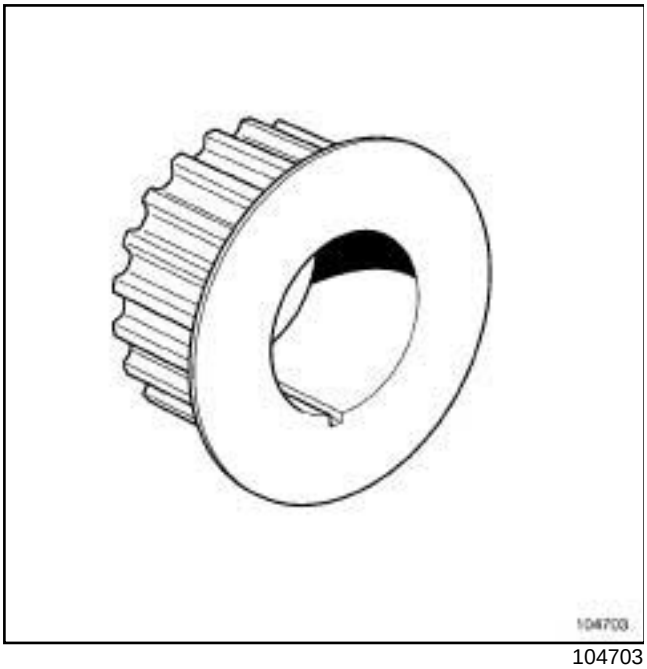

104703

❑

WARNING

Always degrease:

- the end of the crankshaft (timing end),
- the timing sprocket bore and bearing faces,
- the contact surfaces of the crankshaft accessories pulley.

This is to avoid timing slippage.

This slippage leads to engine damage.

2 - Refitting the timing belt

❑ Refit the timing sprocket to the crankshaft.

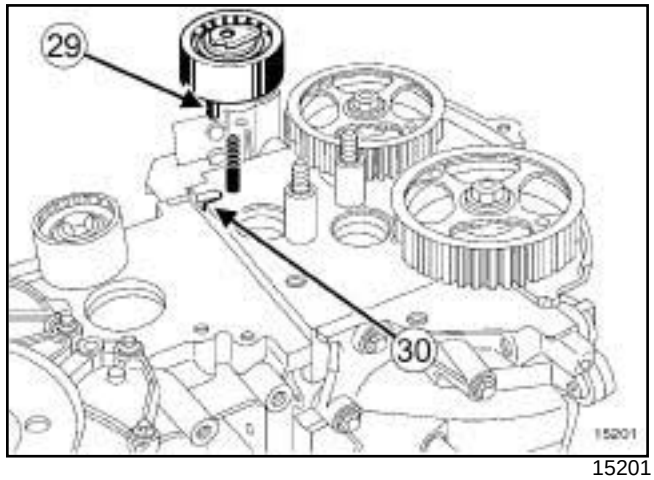

15201

❑ Refit:

- the inlet camshaft dephaser,
- the inlet camshaft dephaser bolt,
- the exhaust camshaft pulley.
- the exhaust camshaft pulley nut,
- a new tensioning roller, ensuring that the lug (**29**) is positioned in the groove (**30**) ,
- the tensioning roller nut,
- a new timing belt,
- the new fixed roller with its spacer,
- the fixed roller bolt.

❑ Torque tighten the **fixed roller bolt (50 N.m)**.

F4R

3 - Timing belt tension

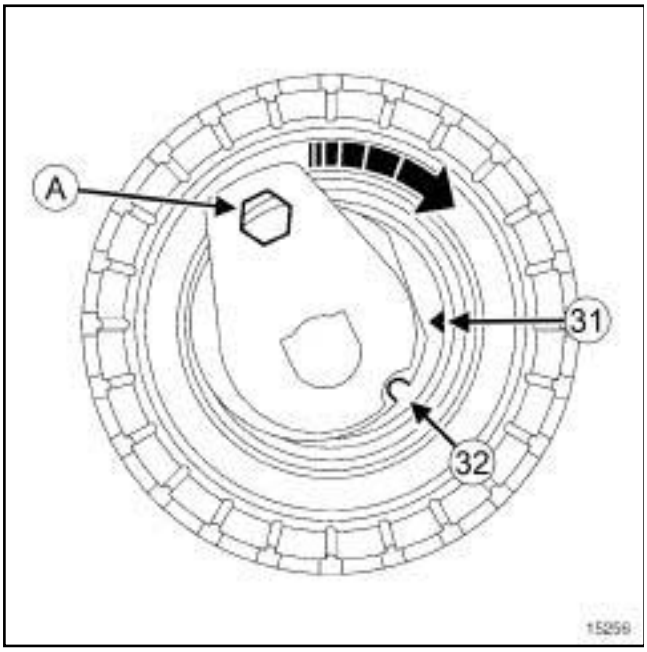

15256

❑

> Note:
>
> When tightening the tensioning roller, use a **6 mm** Allen key to stop the roller moving during the operation.

❑ Align the marks (**31**) and (**32**) using a **6 mm** Allen key at (**A**) .

❑ Torque tighten the **tensioning roller nut (initial torque) (32 N.m)**.

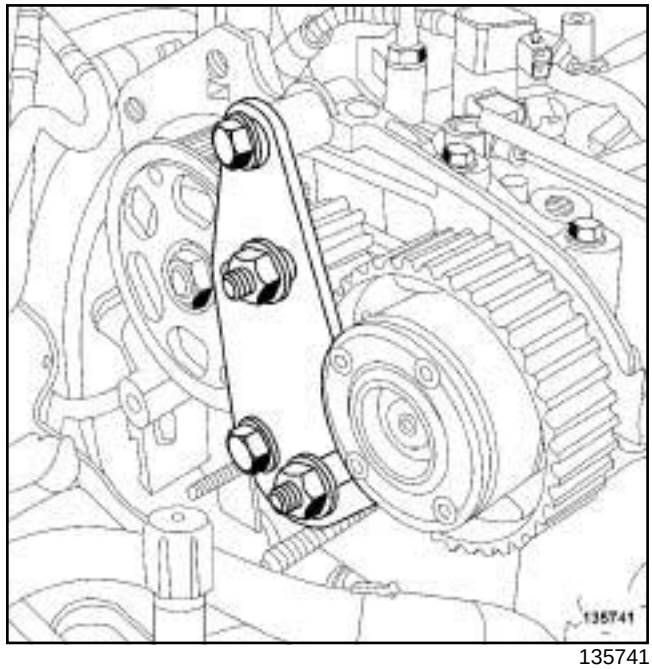

135741

❑ Position the **(Mot. 1801)**.

❑ Bring the toothed sprockets of the **(Mot. 1801)** into contact with the camshaft pulleys.

❑ Tighten to torque:

- the **toothed sprocket nuts (80 N.m)**,
- the **old inlet camshaft dephaser bolt (30 N.m)**.
- the **old exhaust camshaft pulley nut (30 N.m)**.

❑ Remove:

- the **(Mot. 1801)**,
- the TDC setting pin **(Mot. 1054)**,
- the camshaft setting tool **(Mot. 1496)**.

4 - Checking the timing and the timing belt tension

a - Checking the timing

❑ Refit:

- the crankshaft accessories pulley,
- the crankshaft accessories pulley bolt.

F4R

Position of TDC pin before setting point

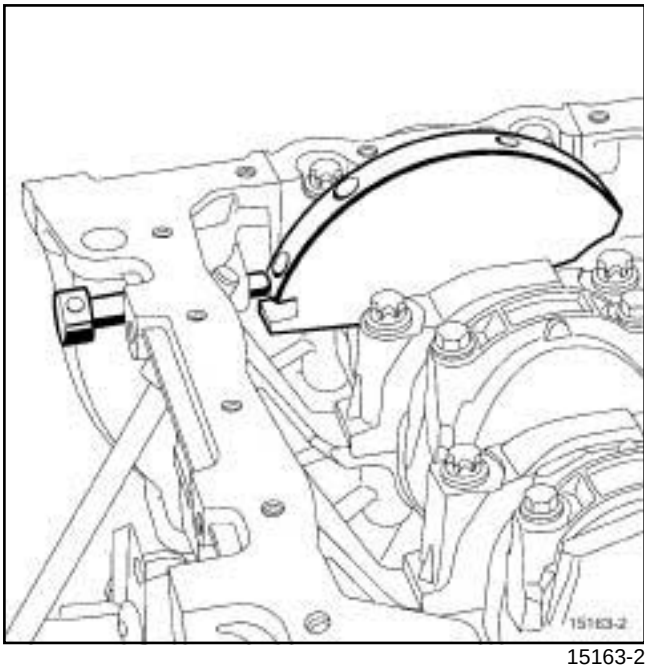

15163-2

Position of TDC pin setting point

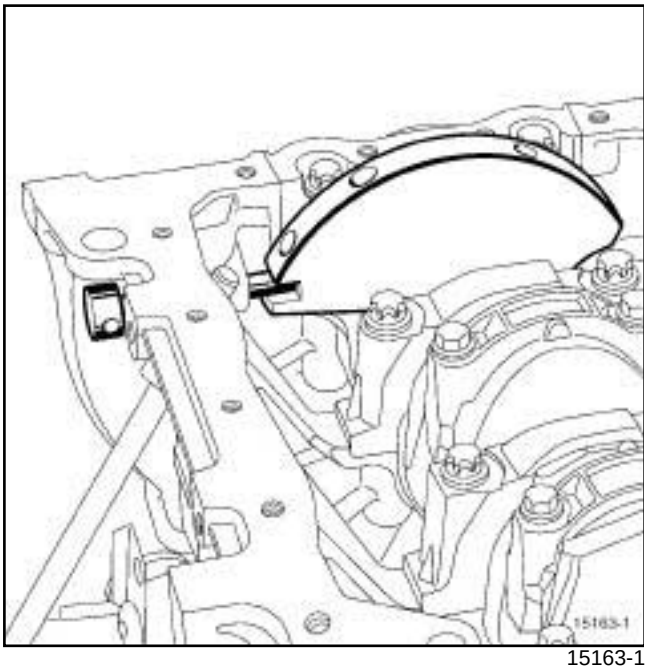

15163-1

❑ Rotate the crankshaft clockwise by two turns (timing end) and before the end of the two turns insert the TDC pin **(Mot. 1054)** then move the crankshaft to its setting point.

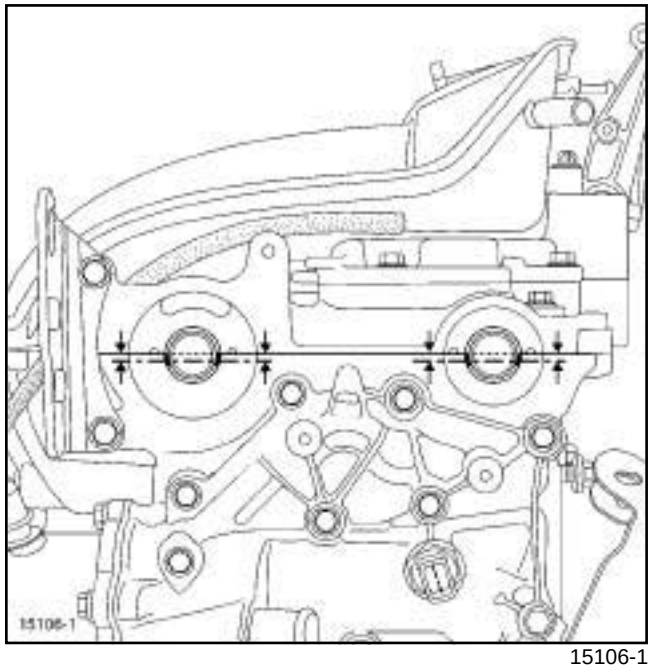

15106-1

❑ Fit the tool **(Mot. 1496)** (without forcing it).

b - Checking the tension

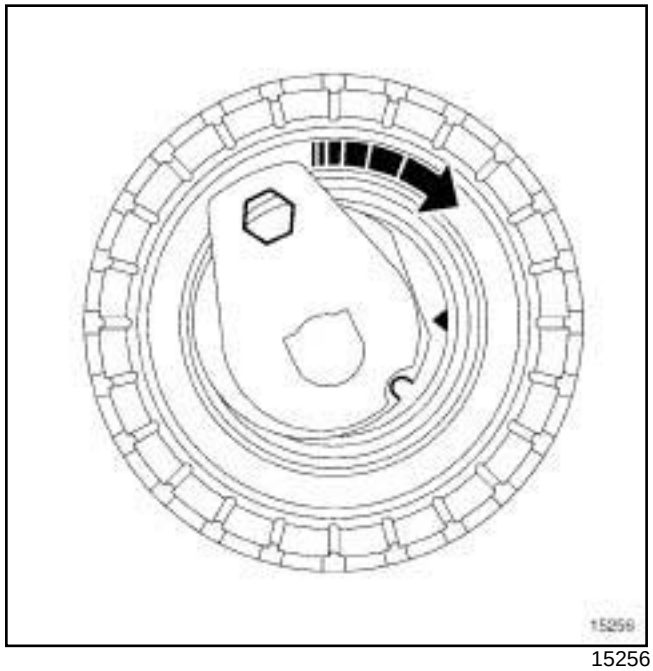

15256

❑ After the engine has been rotated twice, check that the tensioning roller marks are correctly aligned; if they are not aligned return to the timing belt tension step.

❑ Torque tighten the **tensioning roller nut (32 N.m)**.

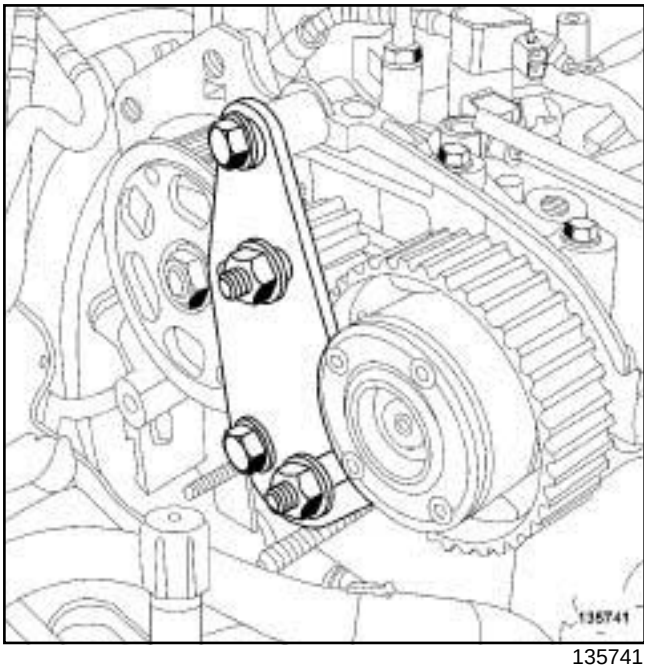

135741

❑ Position the **(Mot. 1801)**.

❑ Bring the toothed sprockets of the **(Mot. 1801)** into contact with the camshaft pulleys.

❑ Torque tighten the **toothed sprocket nuts (80 N.m)**.

❑ Undo:

- the old inlet camshaft dephaser bolt,
- the old exhaust camshaft nut.

❑ Fit without tightening:

- a new bolt on the camshaft dephaser,
- a new nut on the exhaust camshaft pulley.

❑ Tighten to torque:

- the **new bolt on the camshaft dephaser (100 N.m)**,
- the **new nut on the exhaust camshaft pulley (30 N.m)**.

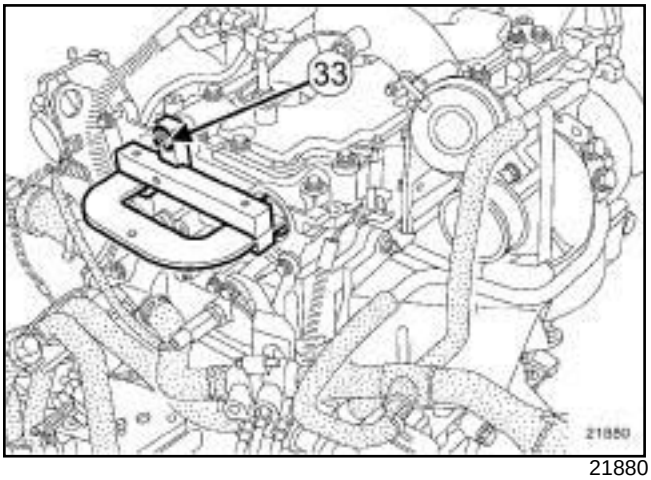

21880

❑ Remove:

- the bolt (**33**) from the **(Mot. 1496)**,
- the camshaft setting tool **(Mot. 1496)**.

❑ Angle tighten the **exhaust camshaft pulley nut (86° ± 6°)**.

❑ Remove:

- the **(Mot. 1801)**,
- the TDC setting pin **(Mot. 1054)**.

❑ Refit:

- a new cap on the end of the inlet camshaft using the tool **(Mot. 1487)**,
- a new cap on the end of the exhaust camshaft using the tool **(Mot. 1488)**,
- a new blanking cover on the camshaft dephaser.

❑ Torque tighten the **camshaft dephaser blanking cover (25 N.m)**.

III - FINAL OPERATION

❑ Refit:

- the lower timing cover,
- the lower timing cover heat shield,
- the upper timing cover,
- the bulkhead upper heat shield,
- the right-hand suspended engine mounting (see **19D**, **Engine mounting**, **Right-hand suspended engine mounting: Removal - Refitting**, page **19D-18**) .

❑ Remove the tool **(Mot. 1453)** fitted with the tool **(Mot. 1453-01)** and the **safety strap(s)**.

❑ Connect the turbocharger vacuum pipe.

❑ Clip on the turbocharger vacuum pipe clip.

F4R

- ❑ Refit the gearbox side lifting eye.
- ❑ Fit the engine wiring.
- ❑ Refit the engine wiring nut on the gearbox side lifting eye.
- ❑ Connect the turbocharger air outlet pipe.
- ❑ Torque tighten **the clip of the turbocharger air outlet pipe (6 N.m)**.
- ❑ Refit:
  - the retaining bracket bolts on the turbocharger air outlet pipe,
  - the air pipe retaining bolt on the intake distributor.
- ❑ Clip on the petrol vapour rebreathing pipes.
- ❑ Remove:
  - the right-hand suspended engine mounting cover,
  - the blanking plugs.
- ❑ Connect:
  - the petrol vapour rebreathing pipe,
  - the fuel supply pipe to the injector rail,
  - the pipe on the petrol vapour rebreathing solenoid valve.
- ❑ Refit:
  - the scoop under the scuttle panel grille (see **Scoop under scuttle panel grille: Removal - Refitting**) (56A, Exterior equipment),
  - the scuttle panel grille (see **Scuttle panel grille: Removal - Refitting**) (56A, Exterior equipment),
  - the windscreen wiper arms (see **Windscreen wiper arm: Removal - Refitting**) (85A, Wiping - Washing).
- ❑ Position the exhaust connecting hose.
- ❑ Refit:
  - a new connecting hose seal,
  - the rubber mounting bush retaining bolt on the exhaust hose,
  - the exhaust connecting hose nuts.
- ❑ Fit the electric coolant pump.
- ❑ Refit:
  - the lower engine tie-bar (see **19D**, **Engine mounting**, **Lower engine tie-bar: Removal - Refitting**, page **19D-33**) ,
  - the crankshaft accessories pulley (see **11A**, **Top and front of engine**, **Crankshaft accessories pulley: Removal - Refitting**, page **11A-15**) ,
  - the accessories belt (see **11A**, **Top and front of engine**, **Accessories belt: Removal - Refitting**, page **11A-7**) ,
  - the radiator mounting cross member (see **Radiator support cross member: Removal - Refitting**) (31A, Front axle components),
  - the front bumper (see **Front bumper: Removal - Refitting**) (55A, Exterior protection),
  - the front section of the front wheel arch liners (see **Front wheel arch liner: Removal - Refitting**) (55A, Exterior protection),
  - the front wheels (see **Wheel: Removal - Refitting**) (35A, Wheels and tyres),
  - the engine undertray,
  - the battery tray (see **Battery tray: Removal - Refitting**) (80A, Battery),
  - the battery (see **Battery: Removal - Refitting**) (80A, Battery),
  - the engine cover.

K4M

Essential special tooling	
Mot. 1489	TDC locating pin.
Mot. 799-01	Timing gear wheel immobiliser.
Mot. 1496	Tool for setting camshaft.
Mot. 1750	Addition to retaining camshaft setting tool Mot. 1496 .
Mot. 1490-01	Locking and adjusting camshaft pulleys.
Mot. 1487	Tool for removing the camshaft covers (57 mm diameter).
Mot. 1488	Tool for removing the camshaft covers (43 mm diameter).

Tightening torques ▽	
fixed roller bolt	**50 N.m**
tensioning roller nut (initial torque)	**7 N.m**
lower timing cover bolts	**12 N.m**
new crankshaft accessories pulley bolt	**40 N.m + 145° ± 15°**
timing tensioning roller nut	**27 N.m**
inlet camshaft pulley nut	**30 N.m + 84° ± 4**
camshaft dephaser bolt	**100 N.m**
exhaust camshaft pulley nut	**30 N.m + 84° ± 4**
lifting eye bolts	**10 N.m**
dipstick guide tube bolt	**10 N.m**
TDC setting pin plug	**25 N.m**
upper timing cover bolts	**46 N.m**
upper timing cover nuts	**46 N.m**

REMOVAL

I - REMOVAL PREPARATION OPERATION

❑ Position the vehicle on a two-post lift (see **Vehicle: Towing and lifting**) (02A, Lifting equipment).

❑ Disconnect the battery (see **Battery: Removal - Refitting**) (80A, Battery).

❑ Remove:

- the engine cover,
- the throttle valve (see **12A**, **Fuel mixture**, **Throttle valve: Removal - Refitting**, page **12A-17**) .

K4M, and 848

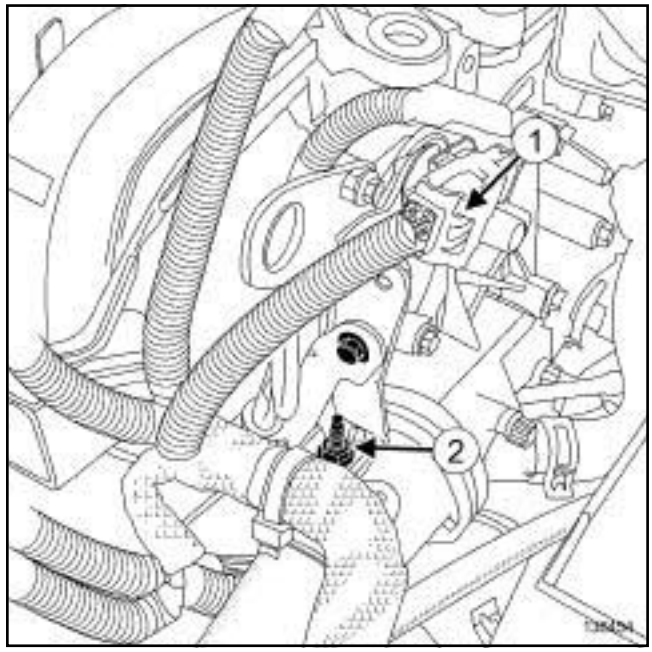

136454

❑ Unclip the engine wiring connector (**1**) from the lifting eye.

❑ Remove:

- the dipstick guide tube bolt,
- the engine wiring retaining nut (**2**) .

K4M, and 858 or 866

❑ Unclip the engine wiring connector from the lifting eye.

❑ Remove the retaining nut from the engine wiring.

K4M

❑ Move aside the engine wiring.

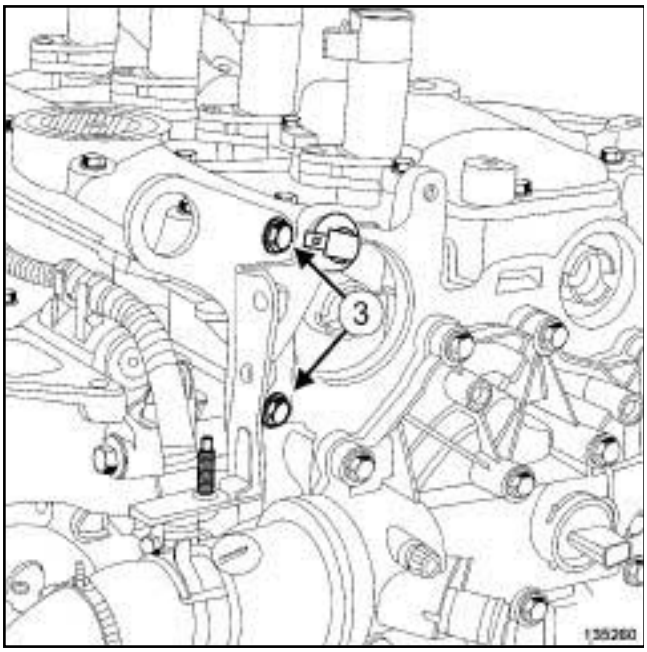

135260

❑ Remove:

- the lifting eye bolts (**3**) ,
- the lifting eye,
- the windscreen wiper arms (see **Windscreen wiper arm: Removal - Refitting**) (85A, Wiping - Washing),
- the scuttle panel grille (see **Scuttle panel grille: Removal - Refitting**) (56A, Exterior equipment),
- the scoop under the scuttle panel grille (see **Scoop under scuttle panel grille: Removal - Refitting**) (56A, Exterior equipment),
- the front right-hand wheel (see **Wheel: Removal - Refitting**) (35A, Wheels and tyres),
- the front section of the front right-hand wheel arch liner (see **Front wheel arch liner: Removal - Refitting**) (55A, Exterior protection),
- the engine undertray bolts,
- the engine undertray,
- the lower engine tie-bar (see **19D**, **Engine mounting**, **Lower engine tie-bar: Removal - Refitting**, page **19D-33**) ,
- the accessories belt (see **11A**, **Top and front of engine**, **Accessories belt: Removal - Refitting**, page **11A-7**) ,
- the right-hand suspended engine mounting (see **19D**, **Engine mounting**, **Right-hand suspended engine mounting: Removal - Refitting**, page **19D-18**) ,
- the crankshaft accessories pulley (see **11A**, **Top and front of engine**, **Crankshaft accessories pulley: Removal - Refitting**, page **11A-15**) .

❑ Check the crankshaft timing with the tool **(Mot. 1489)** by turning the crankshaft using the accessories pulley bolt and a spacer.

❑ Remove the accessories pulley bolt and the spacer.

K4M, and 848

❑ Position the crankshaft fully on the pin by turning the engine flywheel using a screwdriver.

K4M, and 858 or 866

❑ Position the crankshaft fully on the pin by turning the engine flywheel through the crankshaft position sensor hole using a ratchet extension piece.

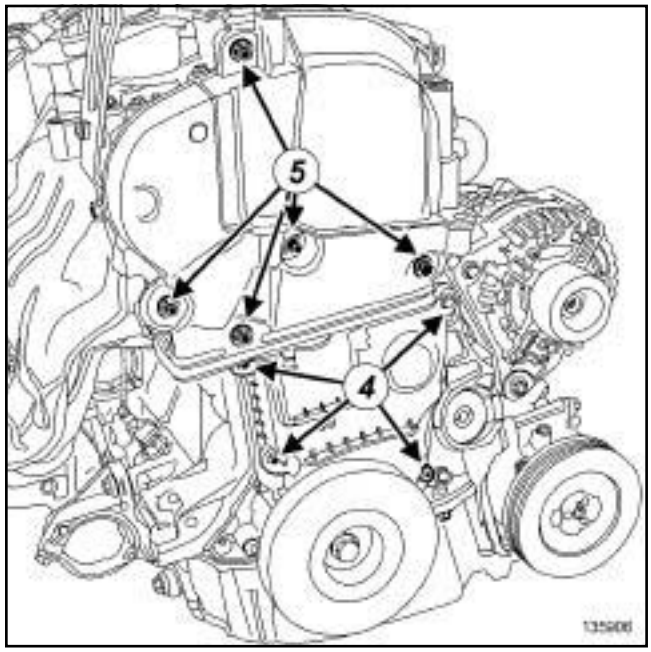

135906

❑ Remove:

- the lower timing cover bolts (**4**) ,
- the lower timing cover,
- the upper timing cover bolts (**5**) ,
- the upper timing cover nuts (**4**) ,
- the upper timing cover.

K4M

II - OPERATION FOR REMOVAL OF PART CONCERNED

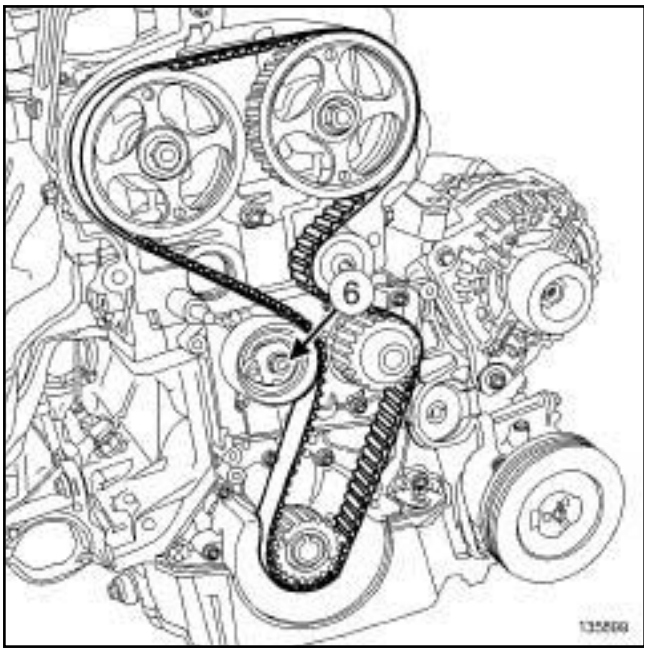

135899

❑ Undo the timing tension wheel nut (**6**) .

> **WARNING**
> Do not drop the crankshaft timing sprocket when removing the timing belt.

❑ Remove:

- the timing pulley,
- the timing belt,
- the timing tensioning roller nut,
- the timing tensioning roller,
- the crankshaft timing sprocket.

REFITTING - PROCEDURE 1

I - REFITTING PREPARATION OPERATION

❑ **parts always to be replaced: Timing belt (10,02, 04,02)**.

❑ **parts always to be replaced: Timing belt tensioning roller (10,02,04,04)**.

❑ **parts always to be replaced: Timing fixed roller (10,02,04,05)**.

❑ **parts always to be replaced: Inlet camshaft cap (10,02,02,11)**.

❑ **parts always to be replaced: Exhaust camshaft cap (10,02,02,12)**.

❑ **parts always to be replaced: Crankshaft accessories pulley bolts (10,03,03,10)**.

II - REFITTING OPERATION FOR PART CONCERNED

❑ The first procedure applies to the replacement of any component inside the timing cover that does not require one or both camshaft pulleys to be loosened.

1 - Adjusting the timing

❑

> **WARNING**
>
> Be sure to degrease:
>
> - the end of the crankshaft (timing end),
> - the timing sprocket pressure faces and bore of the crankshaft,
> - the crankshaft accessories pulley bearing faces,
> - the camshaft ends (timing end),
> - the camshaft sprocket bores and bearing faces.
>
> This is to avoid timing slippage.
>
> This slippage leads to engine damage.

❑ Set the camshaft grooves horizontally and below the centre line by turning the camshafts with the **(Mot. 799-01)** if necessary.

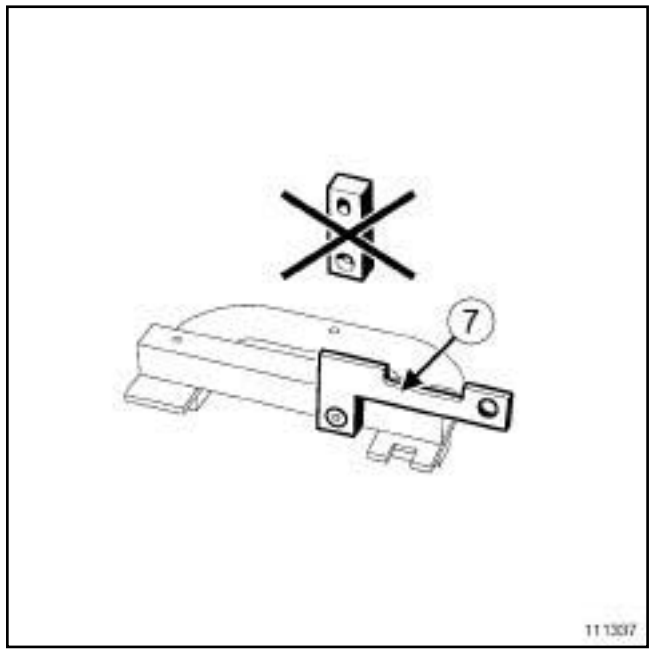

111337

❑ Fit the **(Mot. 1496)** with the **(Mot. 1750)** (**7**) .

K4M

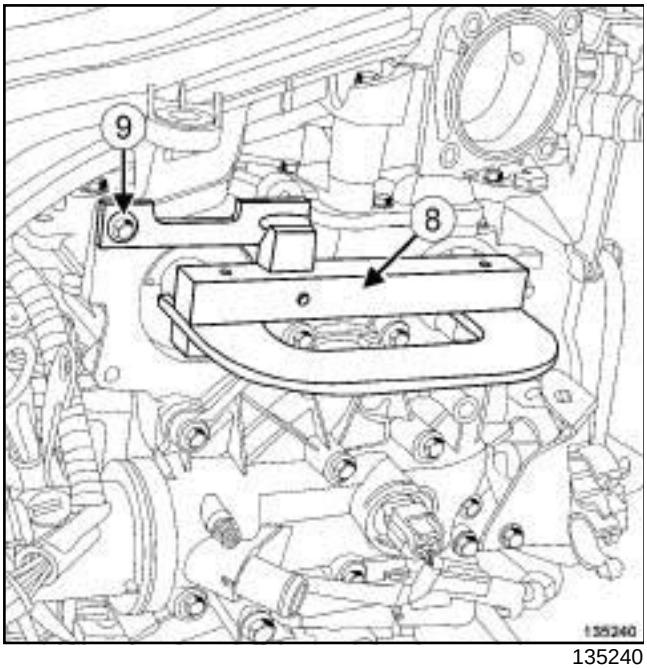

135240

❑ Fit:

- the **(Mot. 1496)** (**8**) fitted with the **(Mot. 1750)** on the end of the camshaft,
- a lifting eye bolt (**9**) to secure the tool **(Mot. 1496)**.

K4M, and 848

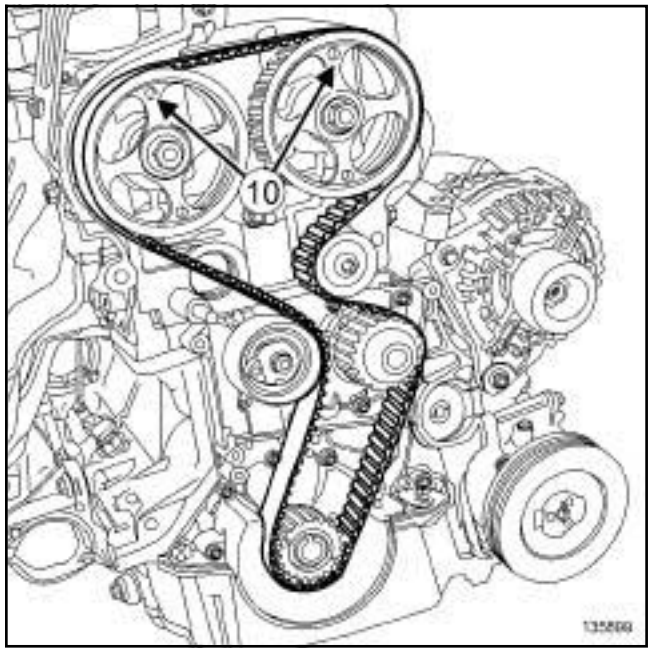

135899

❑ Check that the camshaft pulley mark (**10**) (Renault sign) is vertical and pointing upwards.

❑ Use a pencil to make marks between the camshaft pulleys and the rocker cover.

K4M

K4M, and 858 or 866

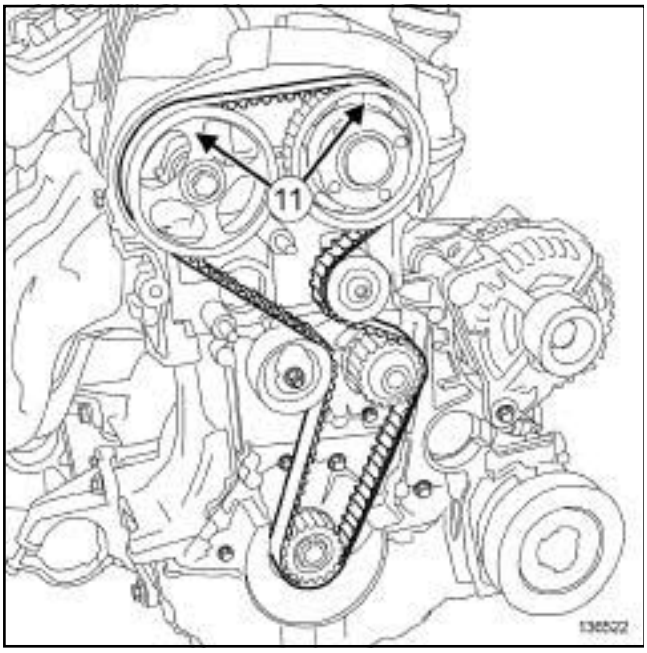

136522

- Check that the exhaust camshaft pulley mark (**11**) (Renault sign) and the camshaft dephaser line are vertical and pointing upwards.
- Use a pencil to make marks between the exhaust camshaft pulley, the camshaft dephaser and the rocker cover.

2 - Refitting

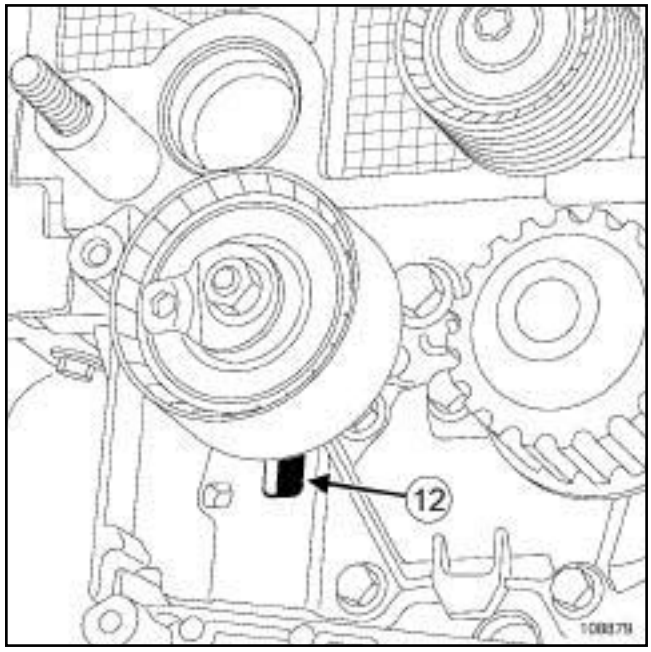

108879

- Fit a new tensioning roller by positioning the tensioning roller lug in the groove (**12**) .
- Screw on the tensioning roller nut without tightening it.

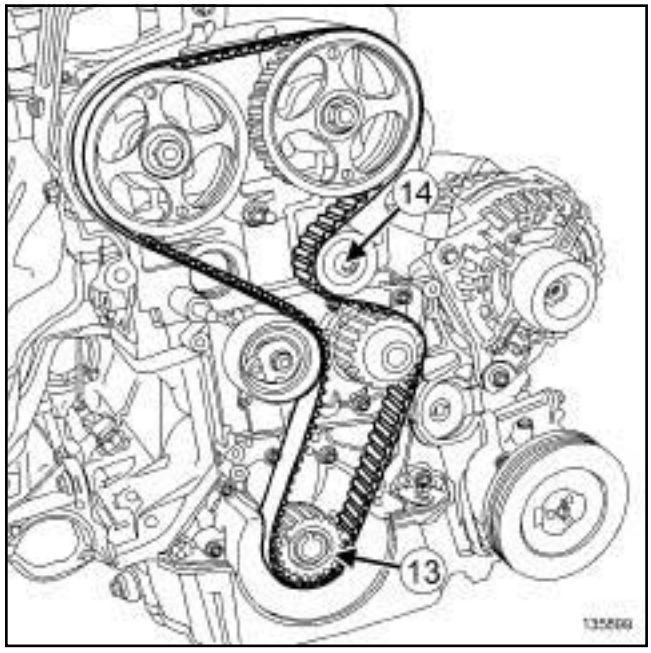

135899

- Refit:

  - the timing sprocket (**13**) .

  - a new timing belt,

  - a new fixed roller (**14**) .

K4M

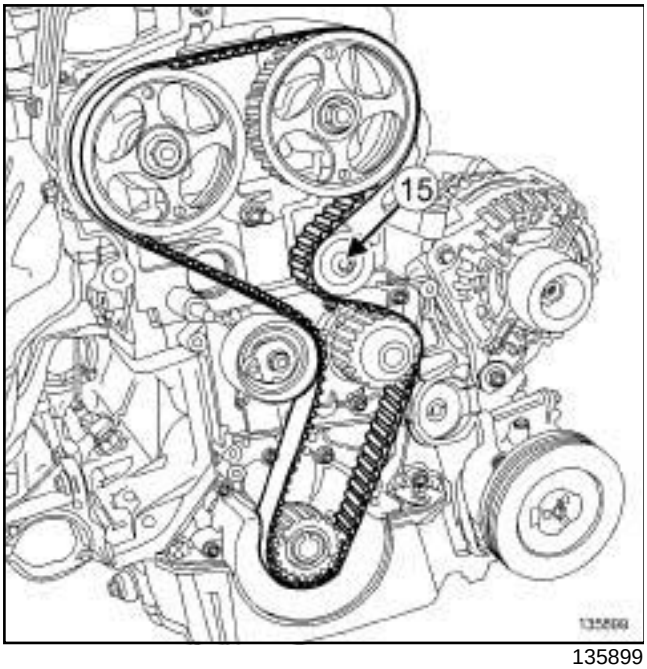

135899

❑ Torque tighten the **fixed roller bolt (50 N.m)** (**15**) .

3 - Timing belt tension

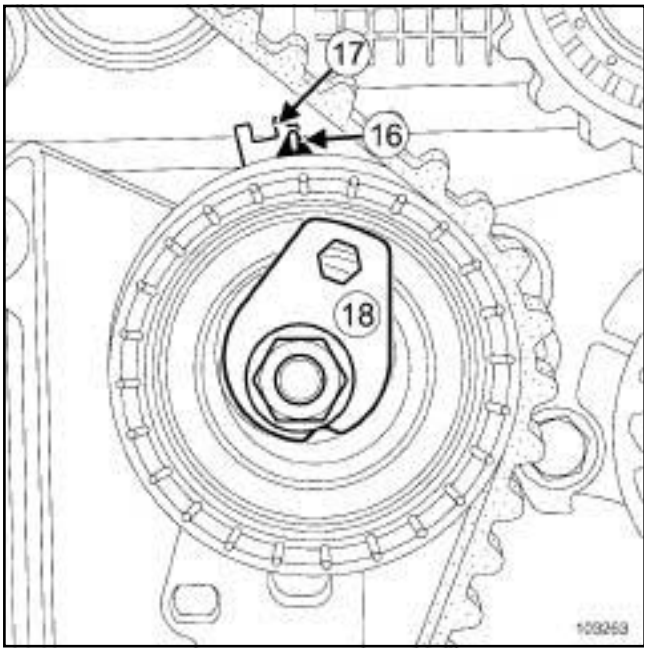

103263

❑ Position the adjustable index (**16**) opposite the mark (**17**) , by turning the eccentric (**18**) clockwise using a **6 mm** Allen key.

❑ Torque tighten the **tensioning roller nut (initial torque) (7 N.m)**.

❑ Refit the lower timing cover.

❑ Tighten to torque the **lower timing cover bolts (12 N.m)**.

❑ Refit the crankshaft accessories pulley.

K4M, and 848

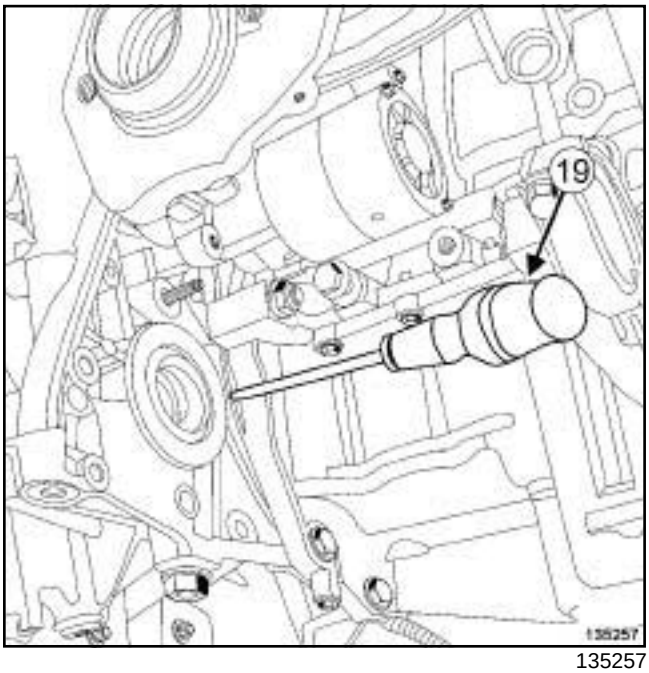

135257

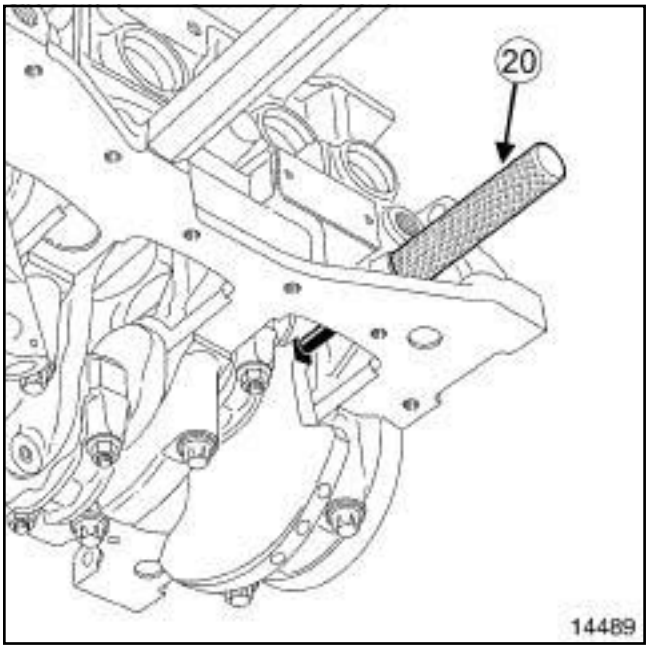

14489

❑ Use a screwdriver (**19**) to check that the flywheel does not turn (clockwise at the timing end), otherwise bring the crankshaft back into contact with the TDC setting pin **(Mot. 1489)** (**20**) using the screwdriver; the crankshaft groove should be at the top.

K4M

K4M, and 858 or 866

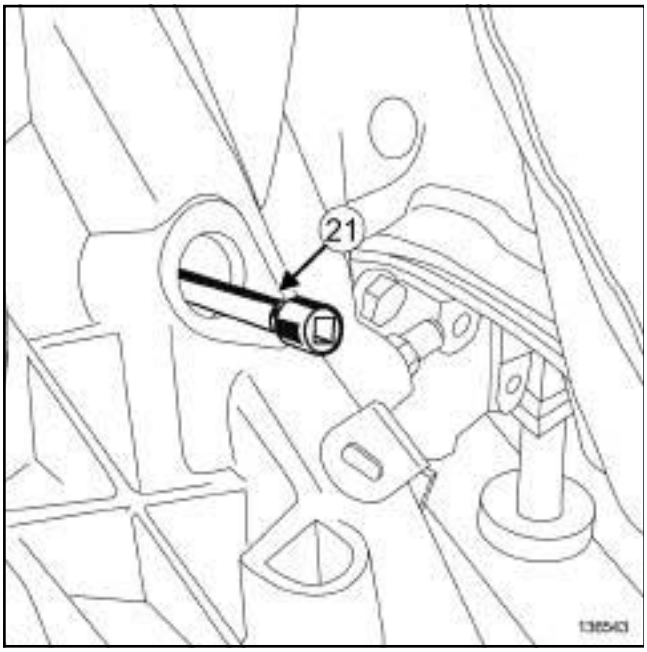

136543

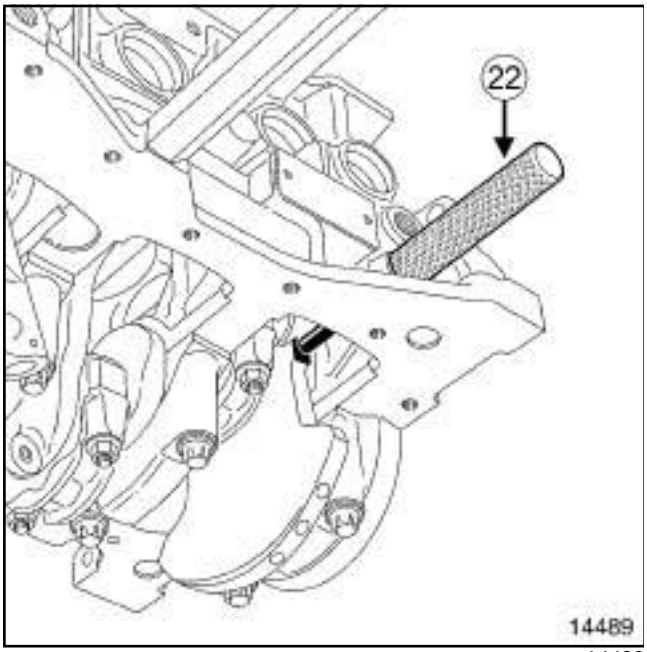

14489

❑ Use a ratchet extension piece (**21**) to check that the flywheel does not turn (clockwise at the timing end), otherwise bring the crankshaft back into contact with the TDC setting pin **(Mot. 1489)** (**22**) using the ratchet extension piece; the crankshaft groove should be pointing upwards.

❑ Torque and angle tighten the **new crankshaft accessories pulley bolt (40 N.m + 145° ± 15°)** (crankshaft in contact with the TDC setting pin).

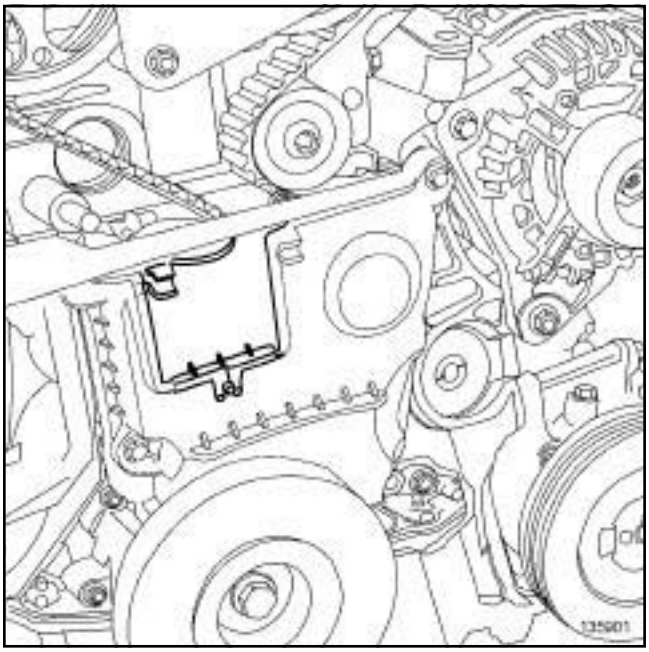

135901

❑ Remove:

- the timing flap from the lower timing cover,
- the lifting eye bolt from the **(Mot. 1496)**,
- the timing tool **(Mot. 1496)** fitted with the **(Mot. 1750)**,
- the TDC setting pin **(Mot. 1489)**.

4 - Checking the tension

K4M, and 858 or 866

❑ Rotate the crankshaft twice clockwise at the timing end and before aligning the marks made previously by the operator (on the camshaft dephaser and exhaust camshaft pulley), screw the TDC setting pin **(Mot. 1489)** into the cylinder block.

K4M, and 848

❑ Rotate the crankshaft twice clockwise at the timing end and before aligning the marks made previously by the operator (on the camshaft pulley), screw the TDC setting pin **(Mot. 1489)** into the cylinder block.

K4M

- Move the crankshaft slowly and smoothly and rest it on the TDC setting pin.
- Remove the TDC setting rod **(Mot. 1489)**.

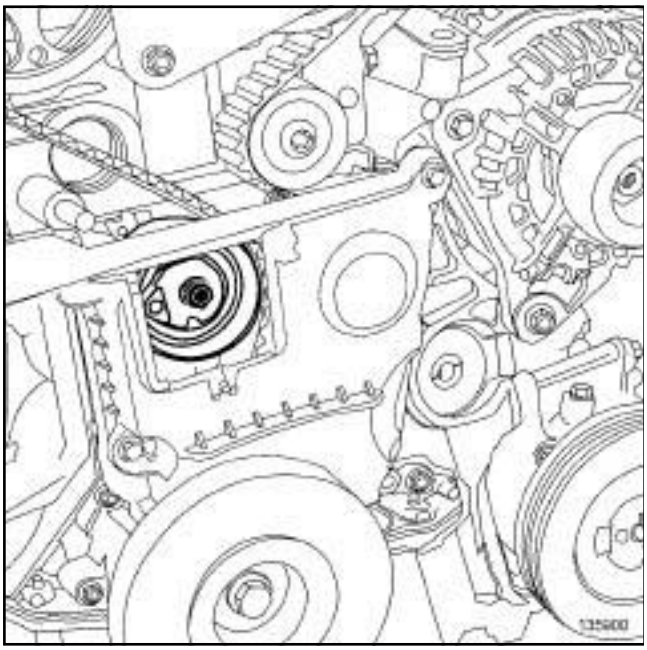

135900

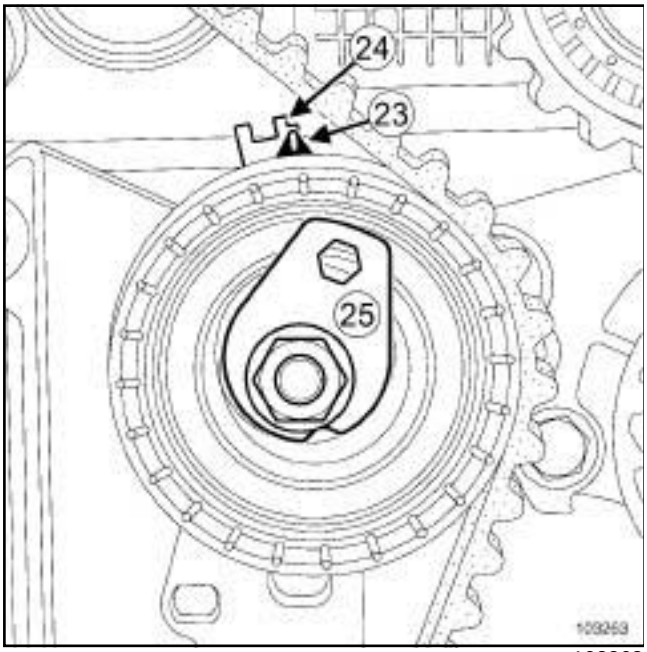

103263

- Check through the lower timing cover window that the adjustable index (**23**) is opposite the notch (**24**) , if this is not the case:
  - loosen the timing tensioning roller nut by up to one turn while holding the eccentric with a **6 mm** Allen key,
  - gradually move the adjustable index marker (**23**) opposite the mark (**24**) turning the eccentric cam (**25**) clockwise.
- Torque tighten the **timing tensioning roller nut (27 N.m)**.

5 - Checking the timing

- Ensure that the index and the notch on the timing tensioning roller are in the correct position before checking the timing.
- Screw the TDC setting pin **(Mot. 1489)** into the cylinder block.
- Move the crankshaft slowly and smoothly and rest it on the TDC setting pin.

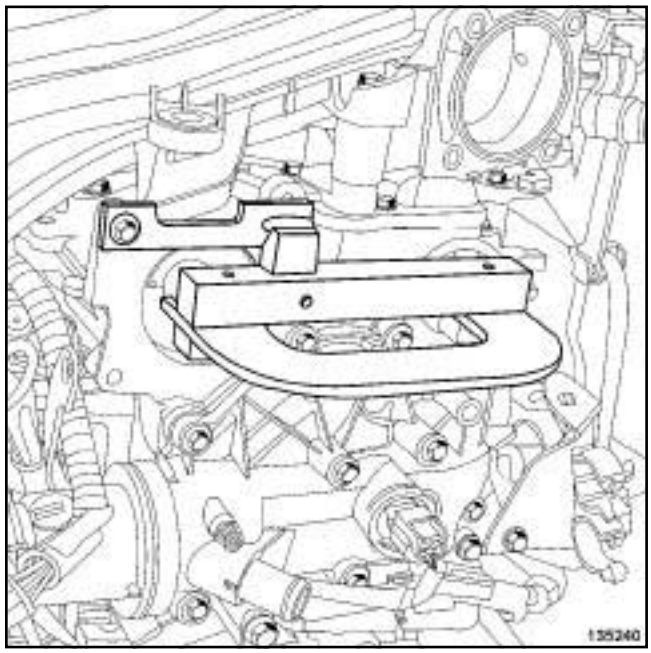

135240

- Position (without forcing) the camshaft setting tool **(Mot. 1496)** fitted with the **(Mot. 1750)** (the camshaft end grooves must be horizontal and offset towards the bottom).

> Note:
>
> The timing adjustment and tensioning operation must be repeated if the camshaft setting tool does not engage.

- Remove:
  - the timing tool **(Mot. 1496)** fitted with the **(Mot. 1750)**,
  - the TDC setting pin **(Mot. 1489)**.

K4M

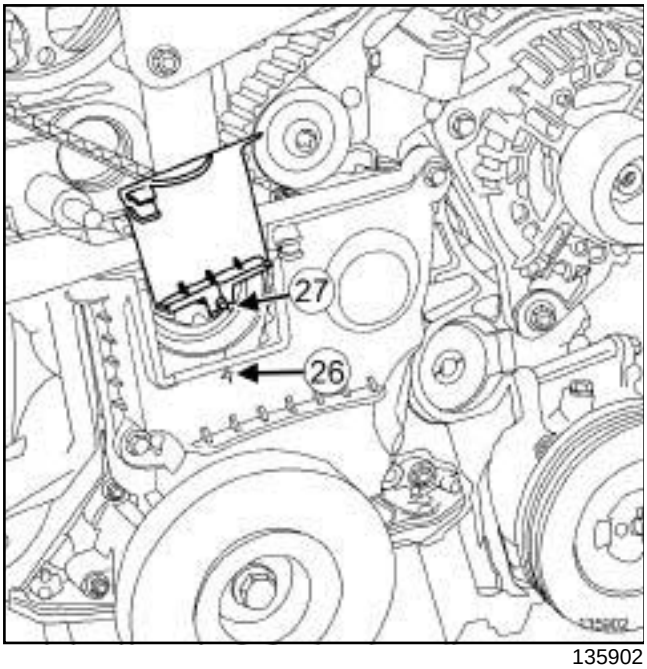

135902

❑ Refit the lower timing cover flap, checking that the locating pin (**26**) fits properly in the notch (**27**) .

REFITTING -PROCEDURE 2

I - REFITTING PREPARATION OPERATION

❑ **parts always to be replaced: Timing belt (10,02, 04,02)**.

❑ **parts always to be replaced: Timing belt tensioning roller (10,02,04,04)**.

❑ **parts always to be replaced: Timing fixed roller (10,02,04,05)**.

❑ **parts always to be replaced: Inlet camshaft cap (10,02,02,11)**.

❑ **parts always to be replaced: Exhaust camshaft cap (10,02,02,12)**.

❑ **parts always to be replaced: Crankshaft accessories pulley bolts (10,03,03,10)**.

II - REFITTING OPERATION FOR PART CONCERNED

❑ The second procedure is used for the replacement of all components requiring the loosening of one or more of the camshaft pulleys.

1 - Adjusting the timing

❑

Note:

If the stud loosens with the nut (see **11A**, **Top and front of engine**, **Camshaft: Removal - Refitting**, page **11A-114**) (Technical Note 3887A,11A, Top and front of engine).

WARNING

Always degrease:

- the end of the crankshaft (timing end),
- the timing sprocket pressure faces and bore of the crankshaft,
- the crankshaft accessories pulley bearing faces,
- the camshaft ends (timing end),
- the camshaft sprocket bores and bearing faces.

This is to avoid timing slippage.

This slippage leads to engine damage.

❑ When replacing the camshaft dephaser (see **11A**, **Top and front of engine**, **Camshaft dephaser: Removal - Refitting**, page **11A-177**) .

K4M

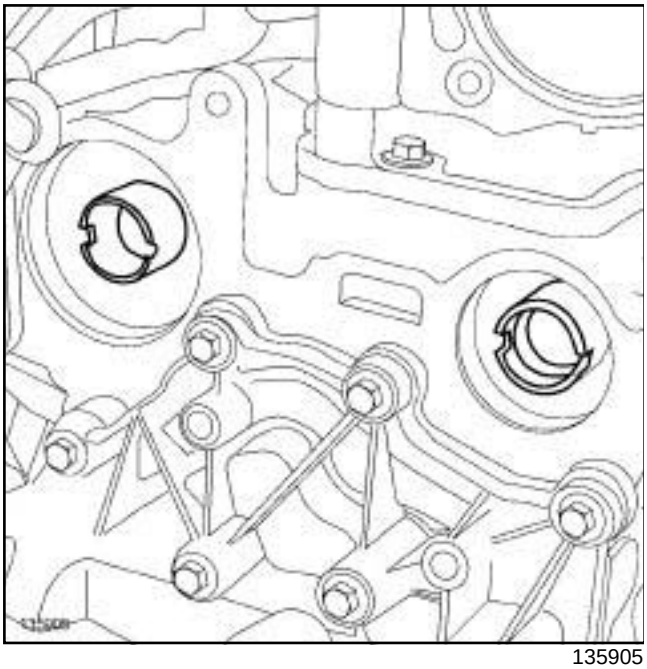

135905

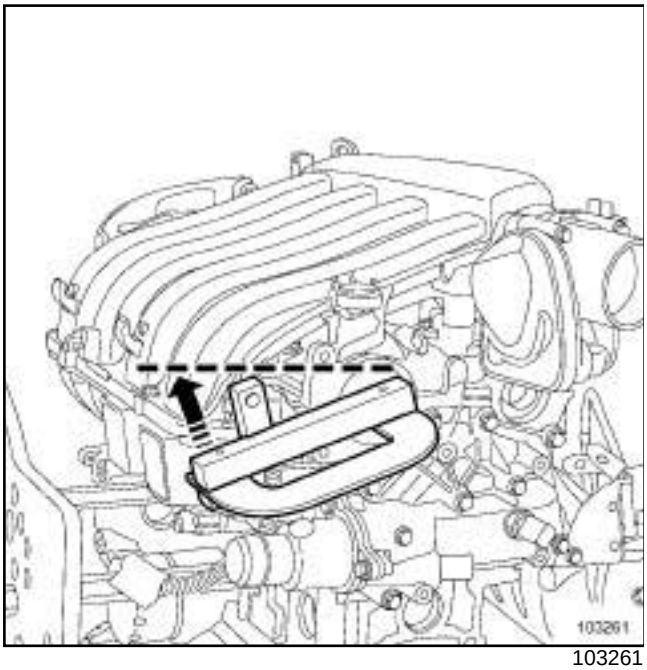

103261

❑ Position the camshaft grooves horizontally and below the centre line, by turning the camshafts with the **(Mot. 1496)** if necessary.

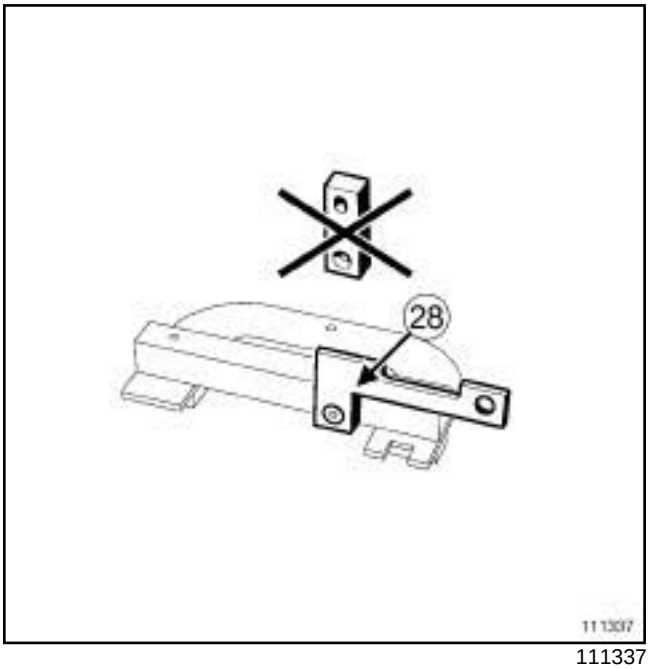

111337

❑ Fit the **(Mot. 1496)** with the **(Mot. 1750)** (**28**) .

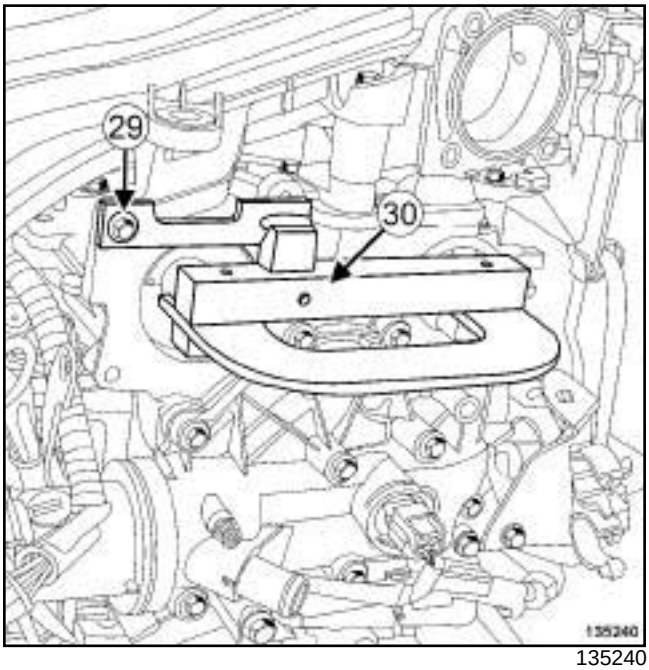

135240

❑ Fit:

- the **(Mot. 1496)** (**30**) fitted with the **(Mot. 1750)** on the end of the camshaft,
- a lifting eye bolt (**29**) to secure the tool **(Mot. 1496)**.

❑ Refit the crankshaft sprocket.

K4M

K4M, and 848

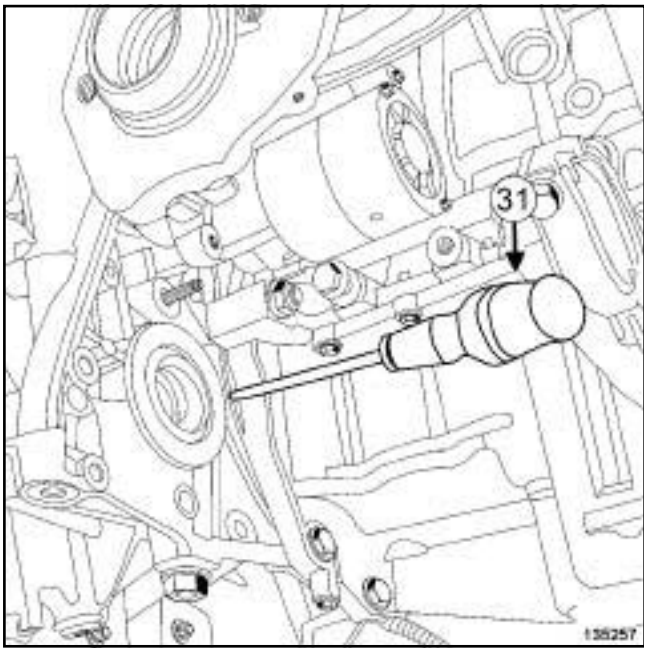

135257

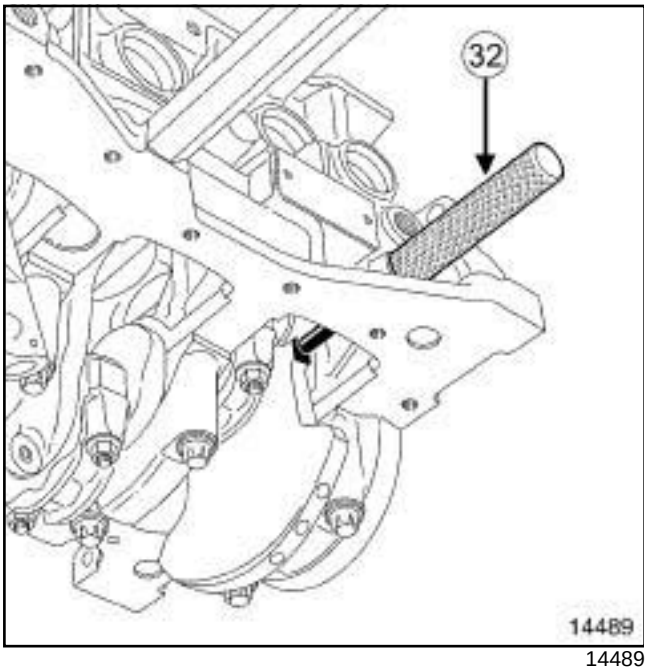

14489

❑ Use a screwdriver (**31**) to check that the flywheel does not turn (clockwise at the timing end), otherwise bring the crankshaft back into contact with the TDC setting pin **(Mot. 1489)** (**32**) using the screwdriver; the crankshaft groove should be at the top.

K4M, and 858 or 866

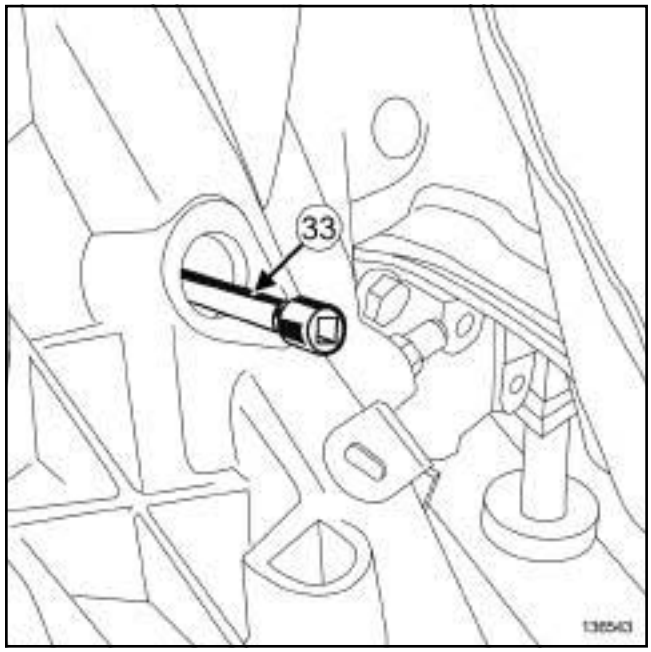

136543

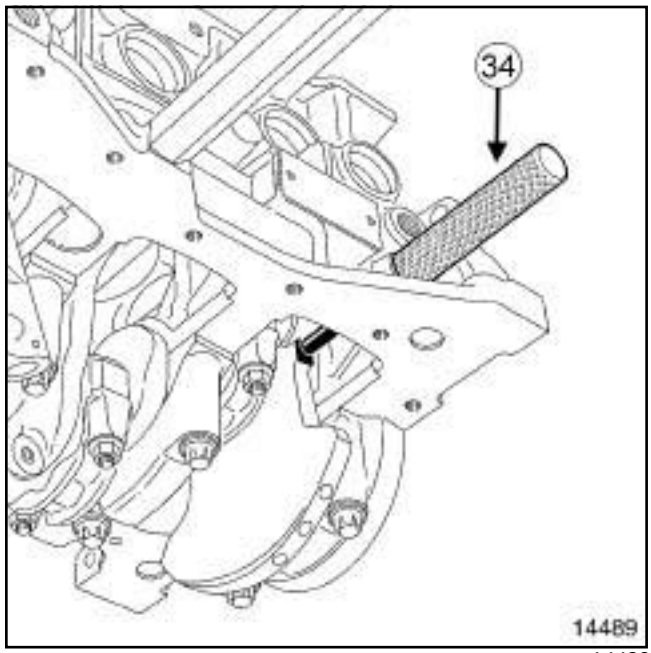

14489

❑ Use a ratchet extension piece (**33**) to check that the flywheel does not turn (clockwise at the timing end), otherwise bring the crankshaft back into contact with the TDC setting pin **(Mot. 1489)** (**34**) using the ratchet extension piece; the crankshaft groove should be pointing upwards.

K4M

K4M, and 848

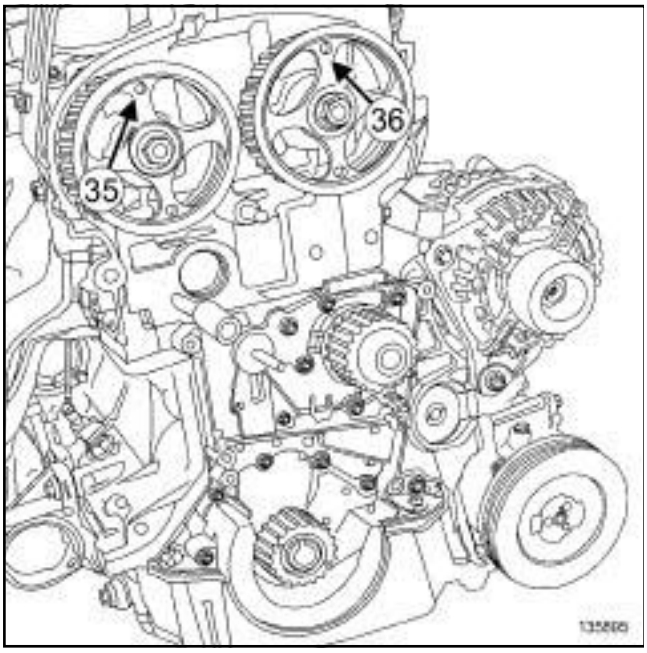

135895

❑ Position:

- the RENAULT badge (**35**) etched on the exhaust camshaft pulley stem vertically and pointing upwards,
- the RENAULT badge (**36**) etched on the inlet camshaft pulley stem vertically and pointing upwards.

❑ Make a mark with a pencil between the inlet camshaft pulley and the rocker cover.

K4M, and 858 or 866

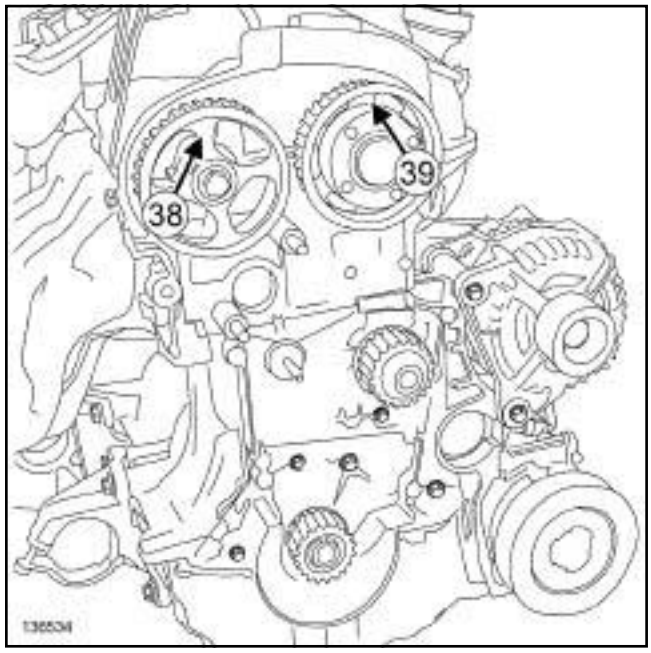

136534

❑ Position:

- the RENAULT badge (**38**) etched on the exhaust camshaft pulley stem vertically and pointing upwards,
- the camshaft dephaser mark (**39**) vertically and pointing upwards.

❑ Make a mark with a pencil between the camshaft dephaser and the rocker cover.

K4M

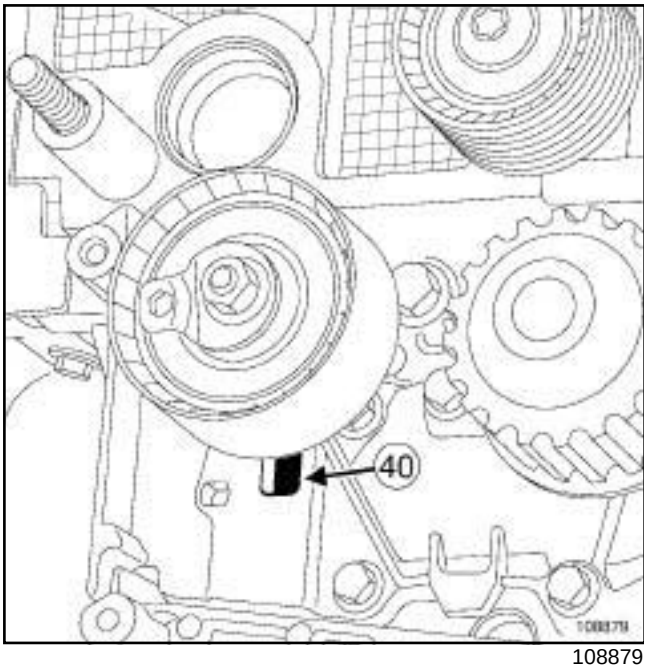

108879

- Fit a new tensioning roller by positioning the tensioning roller lug in the groove (**40**) .
- Screw on the tensioning roller nut without tightening it.

K4M, and 848

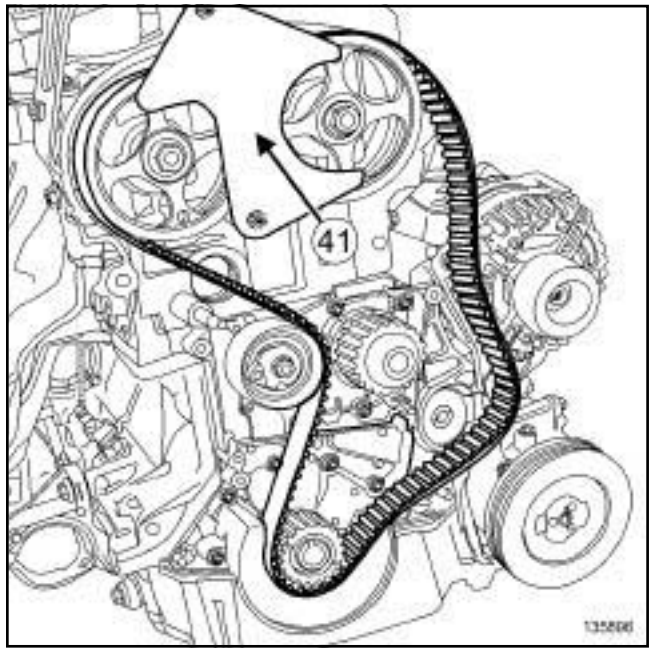

135896

- Refit a new timing belt on the pulley of each camshaft (without moving each of the camshaft pulleys).
- Fit the **(Mot. 1490-01)** (**41**) on the camshaft pulleys (use the bolt and nut of the upper timing cover to fit the **(Mot. 1490-01)**).

Note:

Take care to tighten the timing belt between the two camshaft pulleys correctly.

K4M

K4M, and 858 or 866

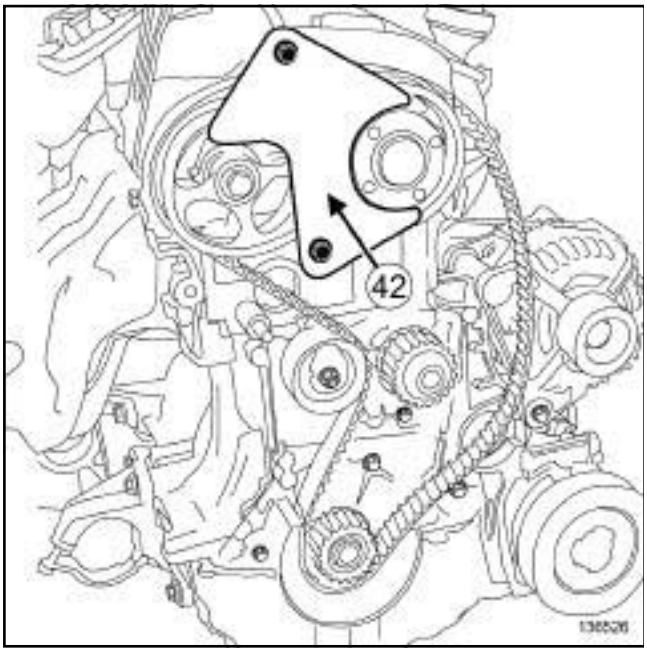

136526

- Refit a new timing belt on the pulley of each camshaft (without moving each of the camshaft pulleys).
- Fit the **(Mot. 1490-01)** (**42**) on the camshaft pulleys (use the bolt and nut of the upper timing cover to fit the **(Mot. 1490-01)**).

> Note:
>
> Take care to tighten the timing belt between the two camshaft pulleys correctly.

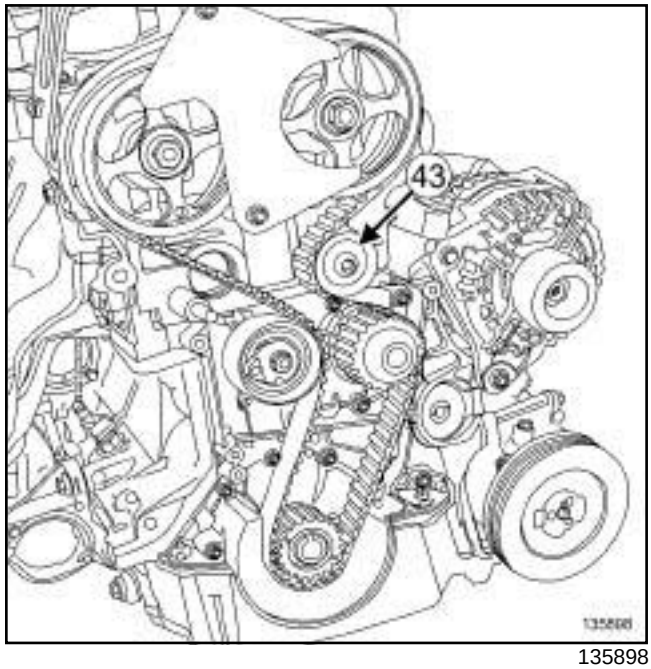

135898

- Fit a new fixed roller (**43**) .
- Torque tighten the **fixed roller bolt (50 N.m)**.

2 - Belt tension

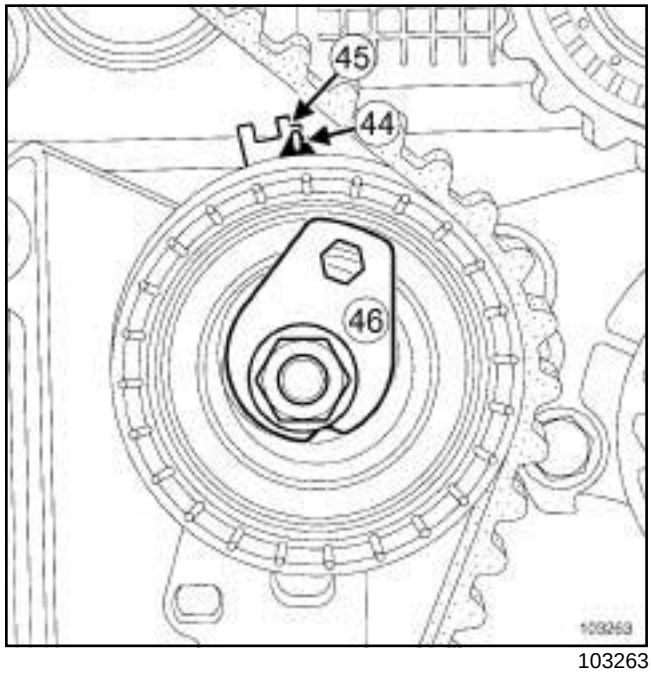

103263

- Using a **6 mm** Allen key, bring the adjustable index (**44**) opposite the mark (**45**) , by turning the eccentric cam (**46**) clockwise.
- Torque tighten the **tensioning roller nut (initial torque) (7 N.m)**.
- Remove the camshaft pulley locking tool **(Mot. 1490-01)**.

K4M

K4M, and 848

❑

Note:

Check that the exhaust camshaft pulley nut and the inlet camshaft pulley nut do not come into contact with their respective pulleys. Also, from time to time, secure the pulley of each camshaft against its respective camshaft.

K4M, and 858 or 866

❑

Note:

Check that the exhaust camshaft pulley nut and the camshaft dephaser pulley bolt do not come into contact with their respective pulleys. Also, from time to time, secure the pulley of each camshaft against its respective camshaft.

❑ Rotate the timing system through six revolutions with the exhaust camshaft pulley, using the **(Mot. 799-01)**.

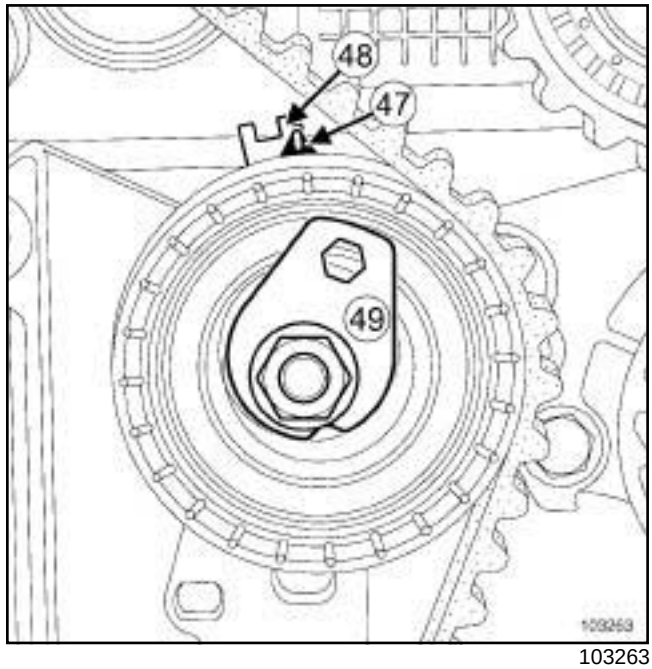

103263

❑ Check that the adjustable index (**47**) is opposite the notch (**48**) , if this is not the case:

- loosen the timing tensioning roller nut by up to one turn while holding the eccentric with a **6 mm** Allen key,
- gradually move the adjustable index marker (**47**) opposite the mark (**48**) turning the eccentric cam (**49**) clockwise.

❑ Torque tighten the **tensioning roller nut (27 N.m)**.

K4M

K4M, and 848

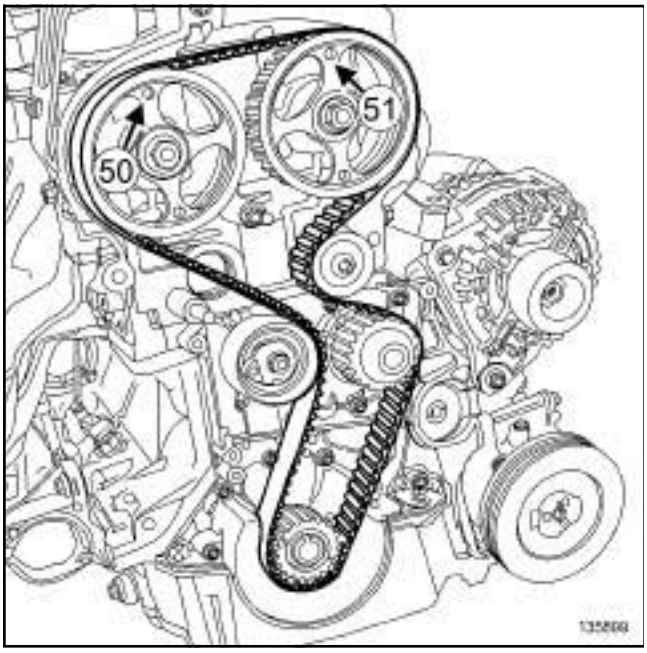

135899

❑ Check that:

- the RENAULT badge (**50**) etched on the exhaust camshaft pulley stem is positioned vertically and pointing upwards,
- the RENAULT badge (**51**) etched on the inlet camshaft pulley stem is positioned vertically and pointing upwards.

K4M, and 858 or 866

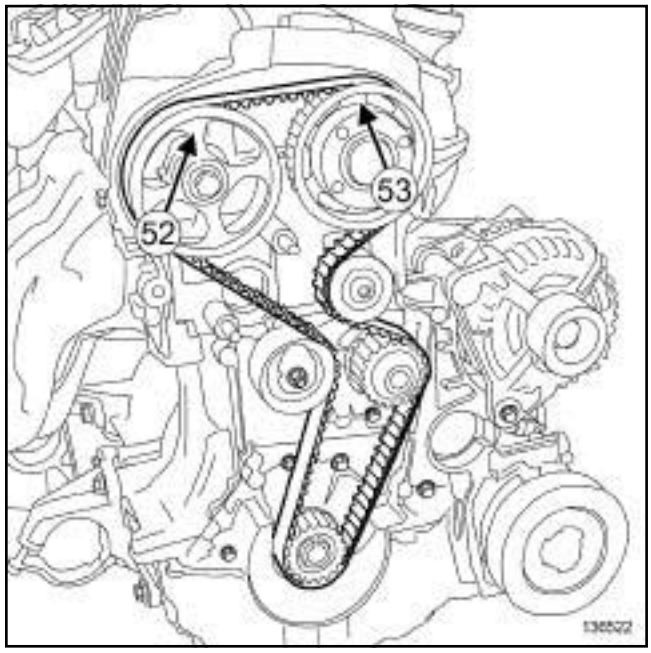

136522

❑ Check that:

- the RENAULT badge (**52**) etched on the exhaust camshaft pulley stem is positioned vertically and pointing upwards,
- the camshaft dephaser mark (**53**) vertically and pointing upwards.

K4M

K4M, and 848

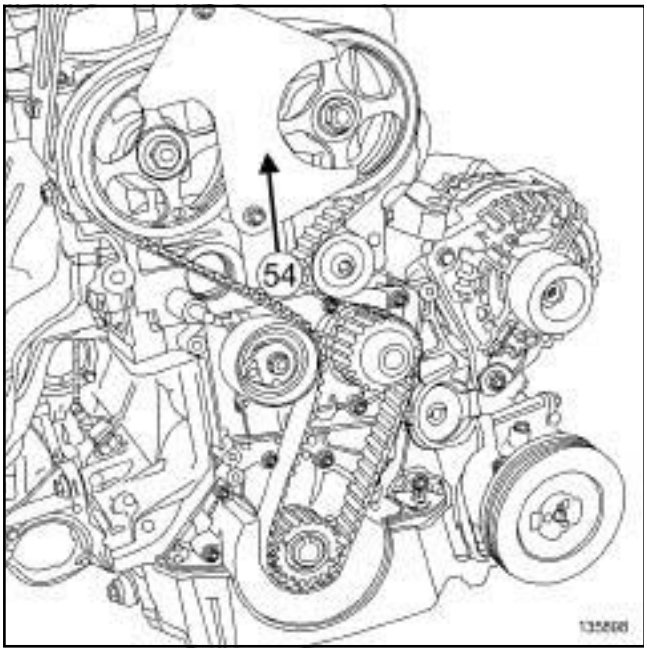

135898

❑ Fit the camshaft pulley locking tool **(Mot. 1490-01)** (**54**) (use the bolt and nut of the upper timing cover to fit the **(Mot. 1490-01)**) using the **(Mot. 799-01)** if necessary.

K4M, and 858 or 866

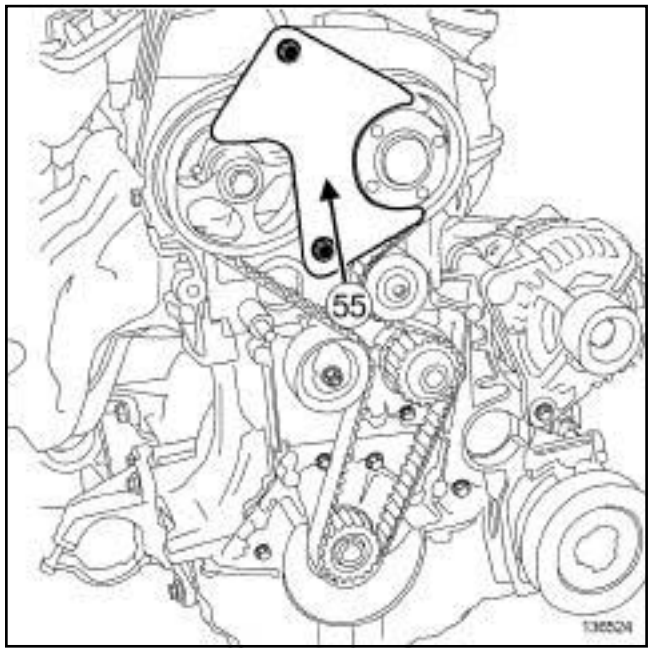

136524

❑ Fit the camshaft pulley locking tool **(Mot. 1490-01)** (**55**) (use the bolt and nut of the upper timing cover to fit the **(Mot. 1490-01)**) using the **(Mot. 799-01)** if necessary.

K4M

K4M, and 848

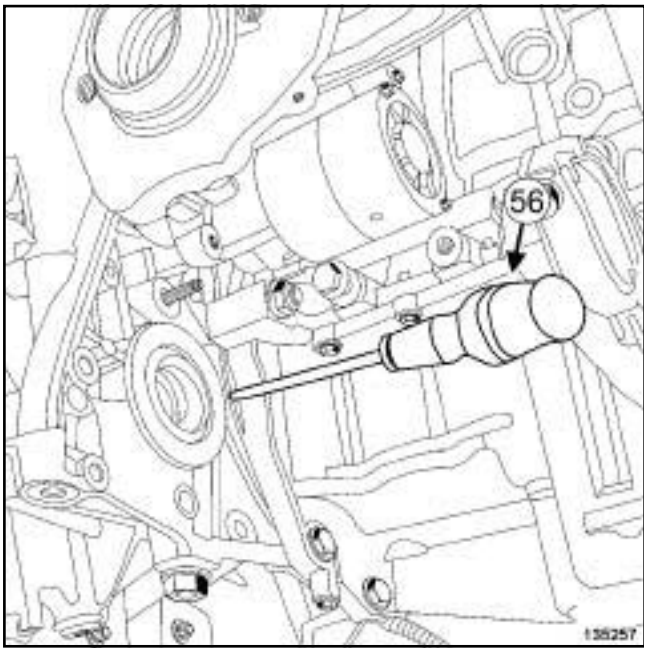

135257

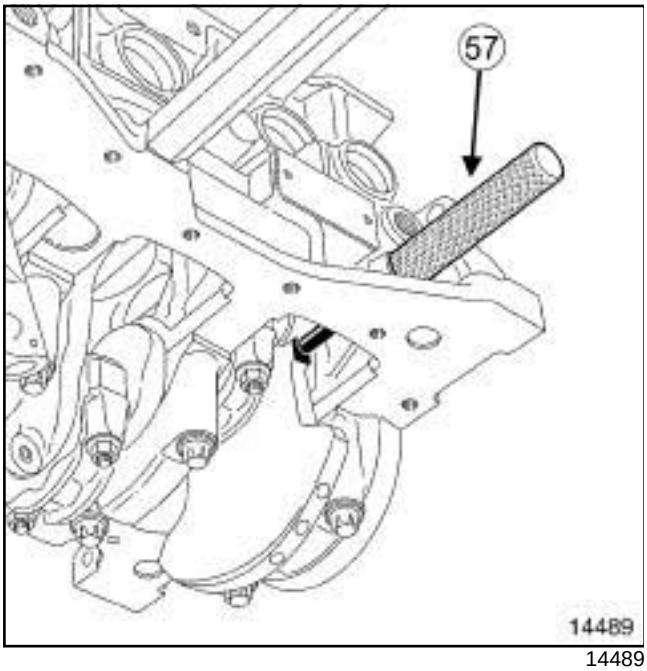

14489

❑ Use a screwdriver (**56**) to check that the flywheel does not turn (clockwise at the timing end), otherwise bring the crankshaft back into contact with the TDC setting pin **(Mot. 1489)** (**57**) using the screwdriver; the crankshaft groove should be at the top.

K4M, and 858 or 866

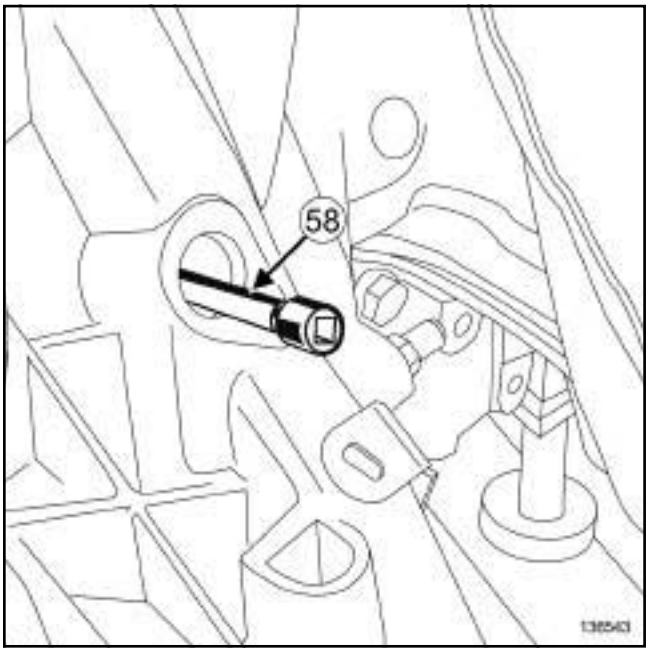

136543

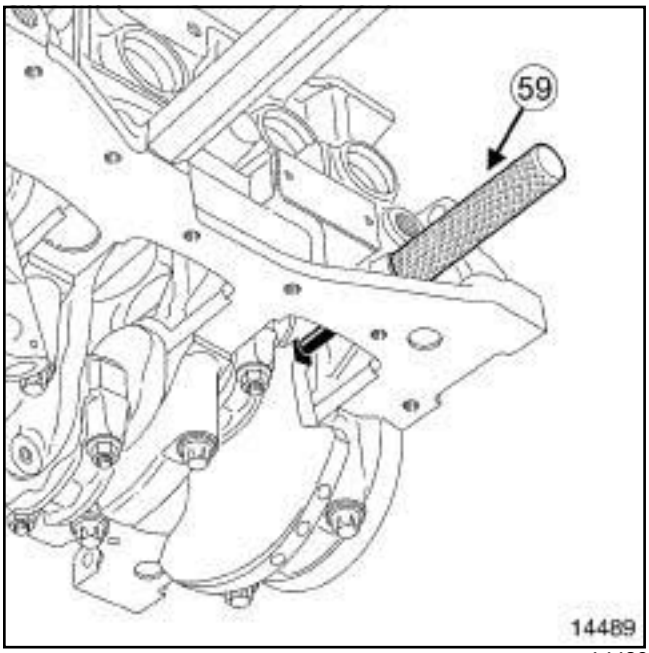

14489

❑ Use a ratchet extension piece (**58**) to check that the flywheel does not turn (clockwise at the timing end), otherwise bring the crankshaft back into contact with the TDC setting pin **(Mot. 1489)** (**59**) using the ratchet extension piece; the crankshaft groove should be pointing upwards.

K4M

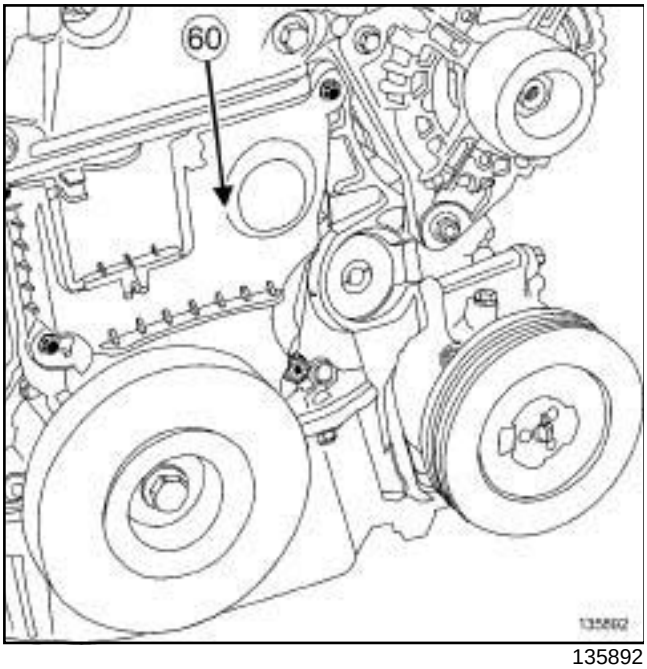

135892

- ❑ Refit the lower timing cover (**60**) .
- ❑ Tighten to torque the **lower timing cover bolts (12 N.m)**.
- ❑ Refit the accessories crankshaft pulley with a new bolt.
- ❑ Tighten to torque and angle the **new crankshaft accessories pulley bolt (40 N.m + 145° ± 15°)** (crankshaft in contact with the TDC setting pin).

K4M, and 848

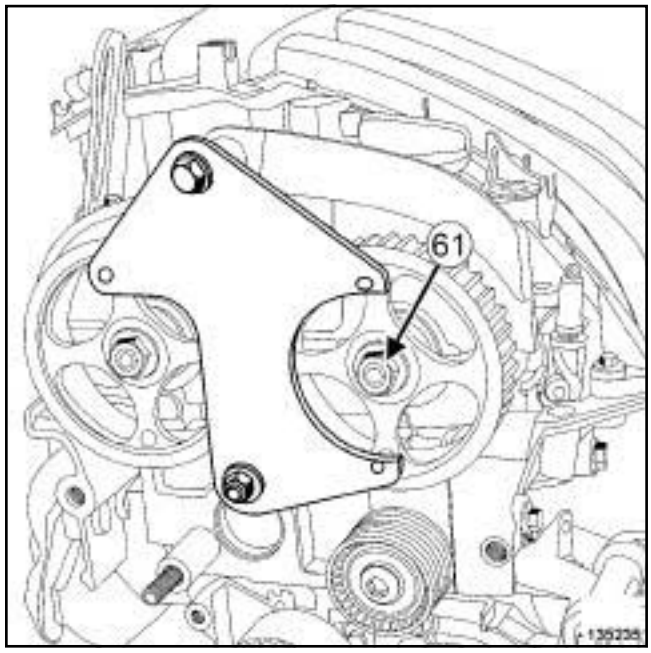

135235

- ❑ Tighten to torque the **inlet camshaft pulley nut (30 N.m + 84° ± 4)** (**61**) .

K4M

K4M, and 858 or 866

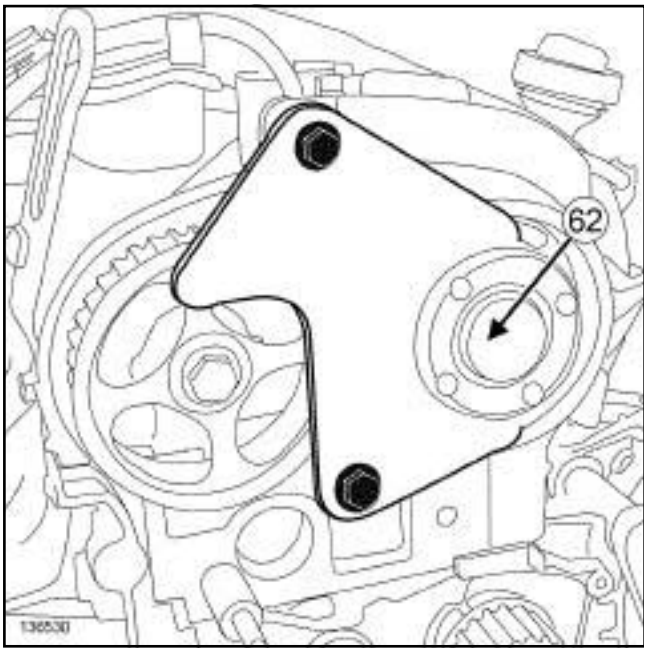

136530

❑ Torque tighten the **camshaft dephaser bolt (100 N.m)**.

❑ Refit the camshaft dephaser blanking cover (**62**) .

❑ Tighten to torque the **exhaust camshaft pulley nut (30 N.m + 84° ± 4)**.

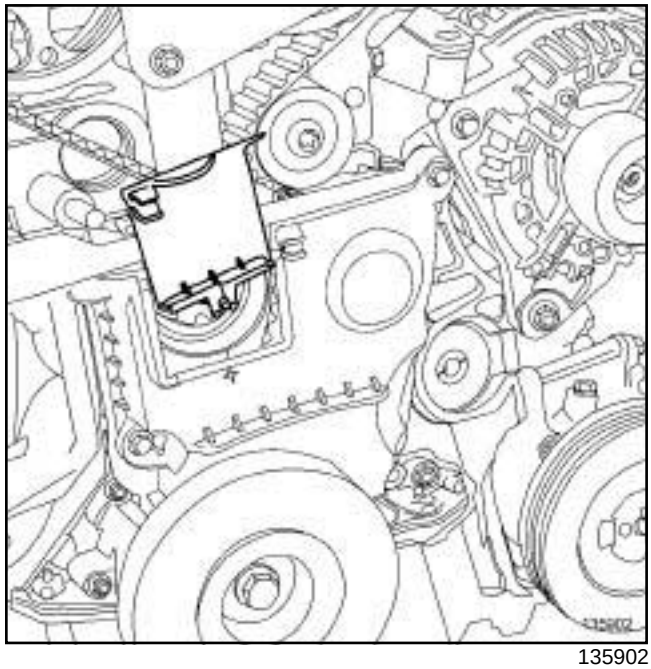

135902

❑ Remove:

- the timing flap from the lower timing cover,
- the lifting eye bolt from the **(Mot. 1496)**,
- the timing tool **(Mot. 1496)** fitted with the **(Mot. 1750)**,
- the camshaft pulley locking tool **(Mot. 1490-01)**,
- the TDC setting pin **(Mot. 1489)**.

3 - Checking the tension

❑ Rotate the crankshaft twice clockwise at the timing end and before aligning the RENAULT marks on the camshaft pulleys, made previously by the operator, screw the TDC setting pin **(Mot. 1489)** into the cylinder block.

❑ Move the crankshaft slowly and smoothly and rest it on the TDC setting pin.

❑ Remove the TDC setting rod **(Mot. 1489)**.

K4M

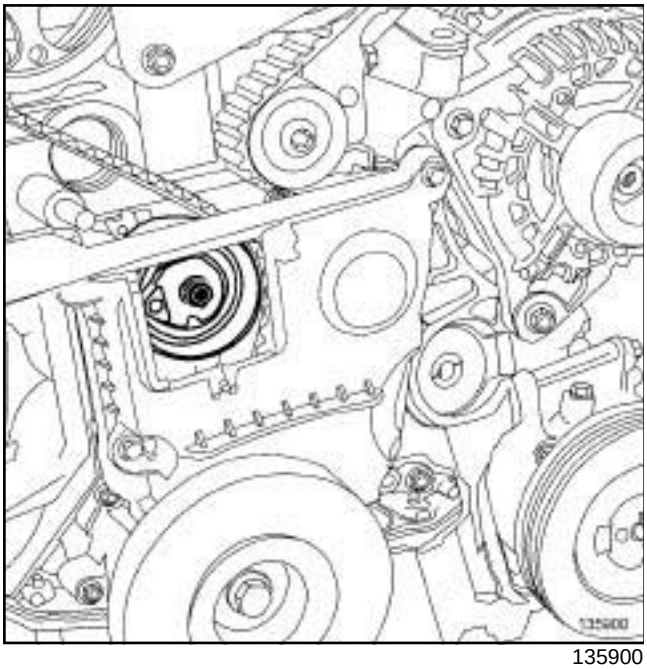

135900

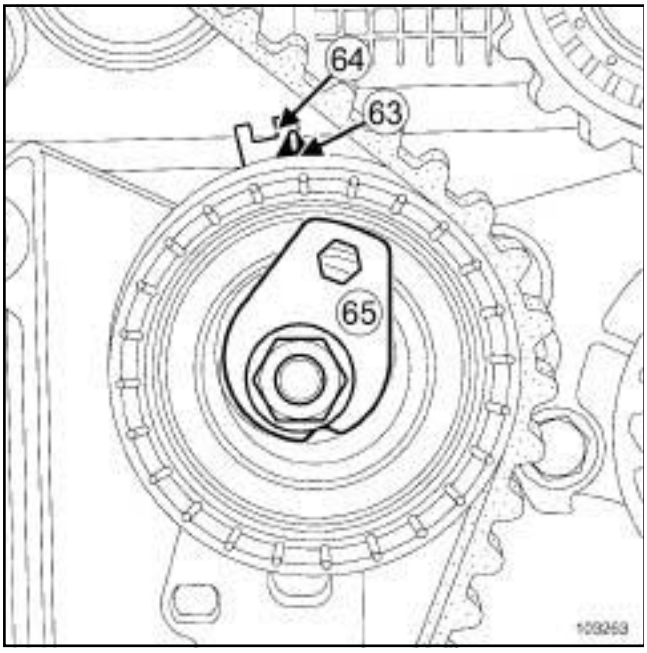

103263

❑ Check through the lower timing cover window that the adjustable index (**63**) is opposite the notch (**64**) , if this is not the case:

- loosen the timing tensioning roller nut by up to one turn while holding the eccentric with a **6 mm** Allen key,
- gradually move the adjustable index marker (**63**) opposite the mark (**64**) turning the eccentric cam (**65**) clockwise.

❑ Tighten to torque the **timing tensioning roller nut (27 N.m)**.

4 - Checking the timing

❑ Check that the tensioning roller pointers are correctly positioned before checking the timing adjustment.

❑ Screw the TDC setting pin **(Mot. 1489)** into the cylinder block.

❑ Move the crankshaft slowly and smoothly and rest it on the TDC setting pin.

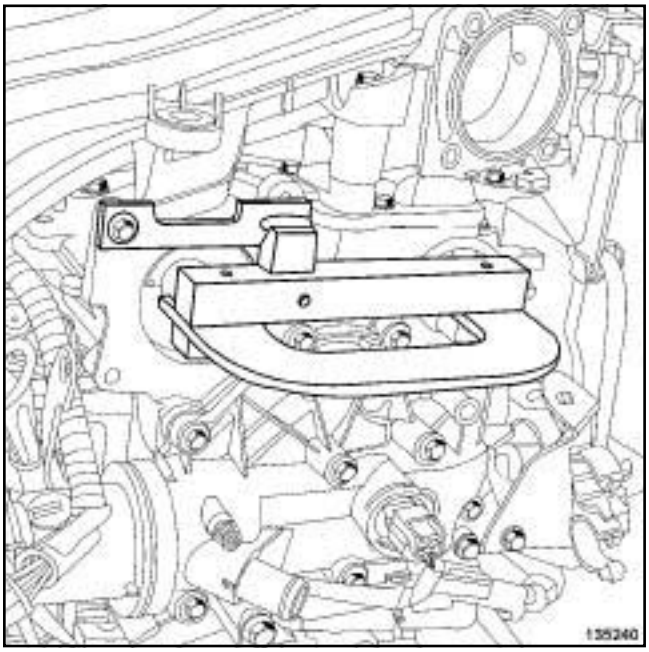

135240

❑ Fit (without forcing) the camshaft setting tool **(Mot. 1496)** (the camshaft grooves must be horizontal and offset towards the bottom).

> Note:
>
> If the tool cannot be engaged, readjust the timing and the tension.

❑ Remove:

- the timing tool **(Mot. 1496)** fitted with the **(Mot. 1750)**,
- the TDC setting pin **(Mot. 1489)**.

K4M

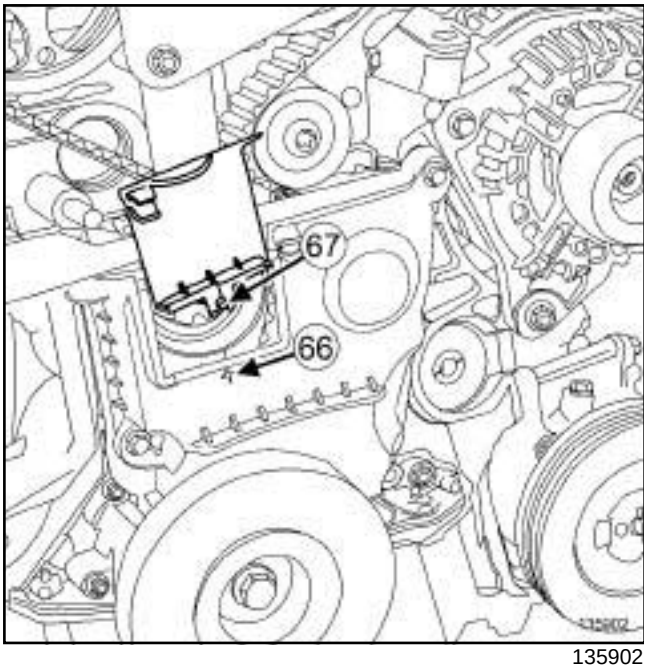

135902

❑ Refit the lower timing cover flap, checking that the locating pin (**66**) fits properly in the notch (**67**) .

III - FINAL OPERATION

❑ Refit:

- a new inlet camshaft plug using the **(Mot. 1487)**,
- a new exhaust camshaft plug using the **(Mot. 1488)**,
- the lifting eye.

❑ Torque tighten the **lifting eye bolts (10 N.m)**.

❑ Fit the engine wiring.

❑ Refit the engine wiring retaining nut.

K4M, and 848

❑ Refit the dipstick guide.

❑ Torque tighten the **dipstick guide tube bolt (10 N.m)**.

❑ Clip the engine wiring connector onto the lifting eye.

❑ Place a drop of **SILICONE ADHESIVE SEALANT** (see **Vehicle: Parts and ingredients for the repairwork**) (04B, Consumables - Products) on the thread of the TDC setting pin plug.

❑ Torque tighten the **TDC setting pin plug (25 N.m)**.

❑ Refit the upper timing cover.

❑ Tighten to torque:

- the **upper timing cover bolts (46 N.m)**,
- the **upper timing cover nuts (46 N.m)**.

❑ Refit:

- the right-hand suspended engine mounting (see **19D**, **Engine mounting**, **Right-hand suspended engine mounting: Removal - Refitting**, page **19D-18**) ,
- the accessories belt (see **11A**, **Top and front of engine**, **Accessories belt: Removal - Refitting**, page **11A-7**) ,
- the lower engine tie-bar (see **19D**, **Engine mounting**, **Lower engine tie-bar: Removal - Refitting**, page **19D-33**) ,
- the engine undertray,
- the front section of the front right-hand wheel arch liner (see **Front wheel arch liner: Removal - Refitting**) (55A, Exterior protection),
- the front right-hand wheel (see **Wheel: Removal - Refitting**) (35A, Wheels and tyres),
- the scoop under the scuttle panel grille (see **Scoop under scuttle panel grille: Removal - Refitting**) (56A, Exterior equipment),
- the scuttle panel grille (see **Scuttle panel grille: Removal - Refitting**) (56A, Exterior equipment),
- the windscreen wiper arms (see **Windscreen wiper arm: Removal - Refitting**) (85A, Wiping - Washing),
- the throttle valve (see **12A**, **Fuel mixture**, **Throttle valve: Removal - Refitting**, page **12A-17**) ,
- the engine cover.

❑ Connect the battery (see **Battery: Removal - Refitting**) (80A, Battery).

K9K

Tightening torques ▽	
rocker cover bolts	**11 N.m**
lower engine tie-bar bolt on the subframe	**180 N.m**
lower engine tie-bar bolt on the lower engine tie-bar support	**180 N.m**

IMPORTANT
Wear leaktight gloves (Nitrile type) for this operation.

REMOVAL

I - REMOVAL PREPARATION OPERATION

❑ Remove:

- the engine cover,
- the engine undertray bolts,
- the engine undertray.
- the windscreen wiper arms (see **Windscreen wiper arm: Removal - Refitting**) (85A, Wiping - Washing),
- the scuttle panel grille (see **Scuttle panel grille: Removal - Refitting**) (56A, Exterior equipment),
- the scoop under the scuttle panel grille (see **Scoop under scuttle panel grille: Removal - Refitting**) (56A, Exterior equipment),
- the right-hand suspended engine mounting (see **19D**, **Engine mounting**, **Right-hand suspended engine mounting: Removal - Refitting**, page **19D-18**) .

K9K, and 830

❑ Remove the camshaft position sensor (see **13B**, **Diesel injection**, **Camshaft position sensor: Removal - Refitting**, page **13B-19**) .

K9K, and 832

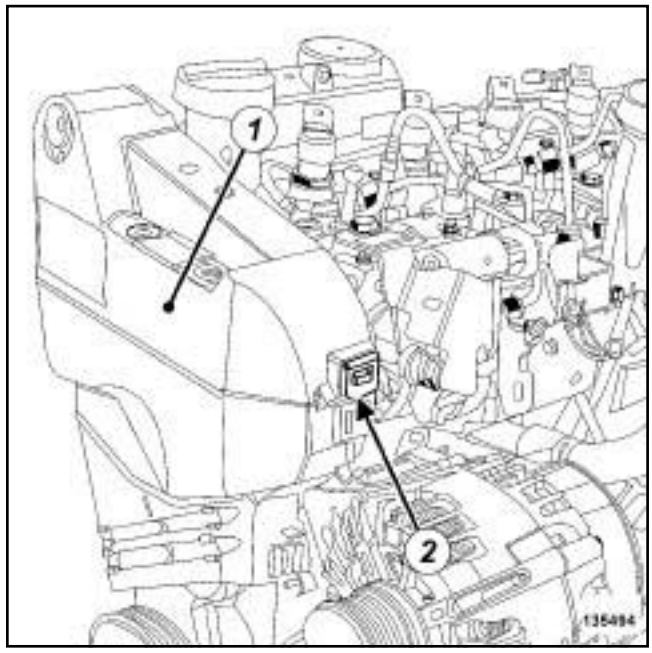

135494

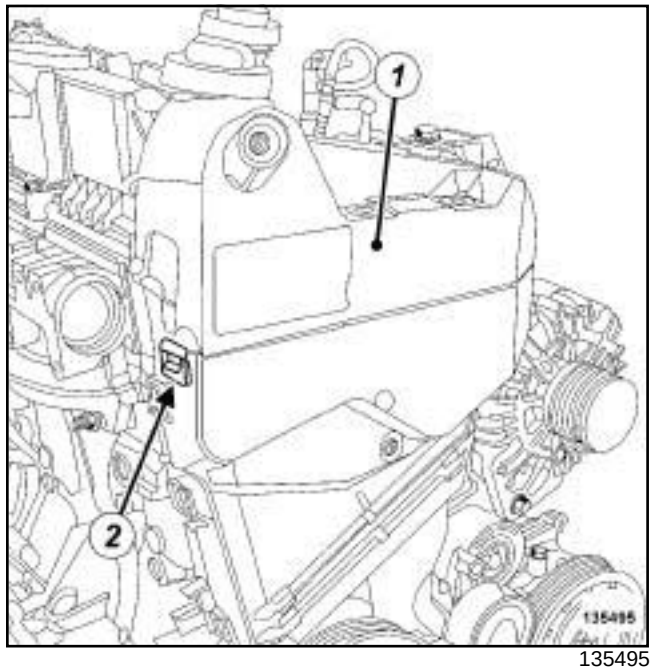

135495

❑ Remove the upper timing cover (**1**) by pressing the clips (**2**) .

K9K

K9K, and 830

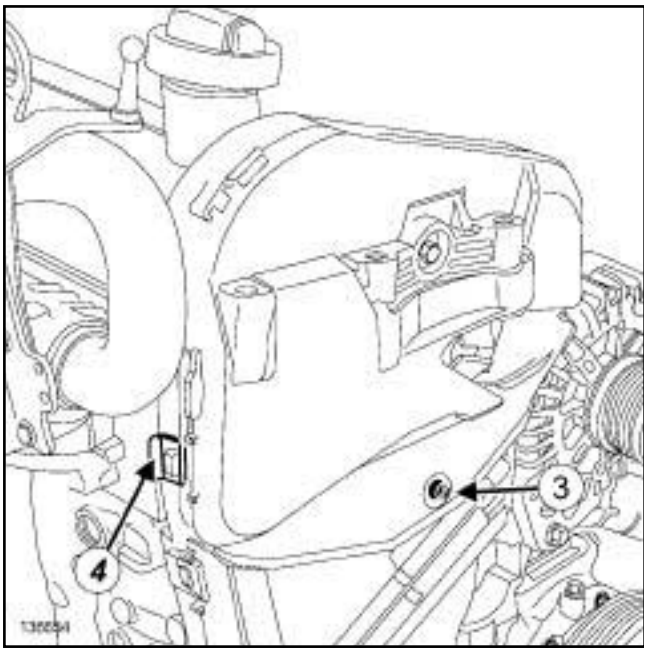

136654

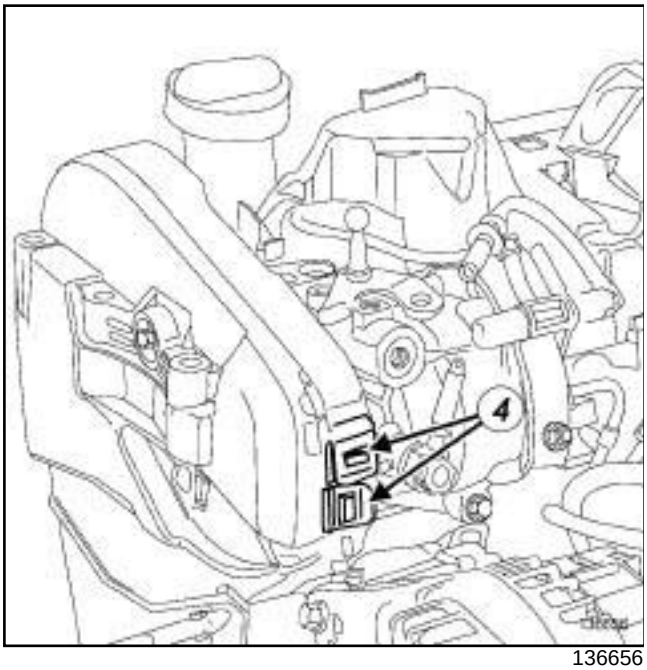

136656

❑ Remove:

- the bolt (**3**) from the upper timing cover,
- the upper timing cover by pressing the clips (**4**) .

❑ Remove the turbocharger outlet air pipe (see **12B**, **Turbocharging**, **Intercooler air inlet pipe: Removal - Refitting**, page **12B-41**) .

K9K, and 832

❑ the damper valve (see **12A**, **Fuel mixture**, **Air inlet flap: Removal - Refitting**, page **12A-11**) .

K9K

K9K, and 830

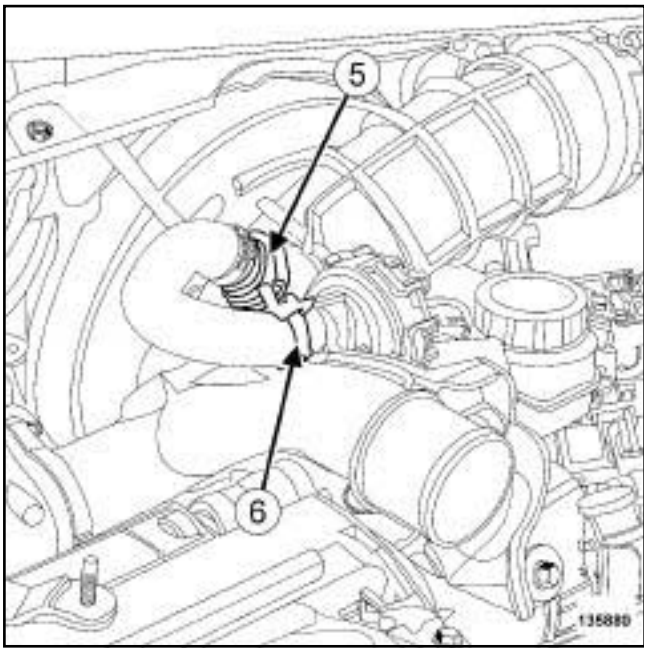

135880

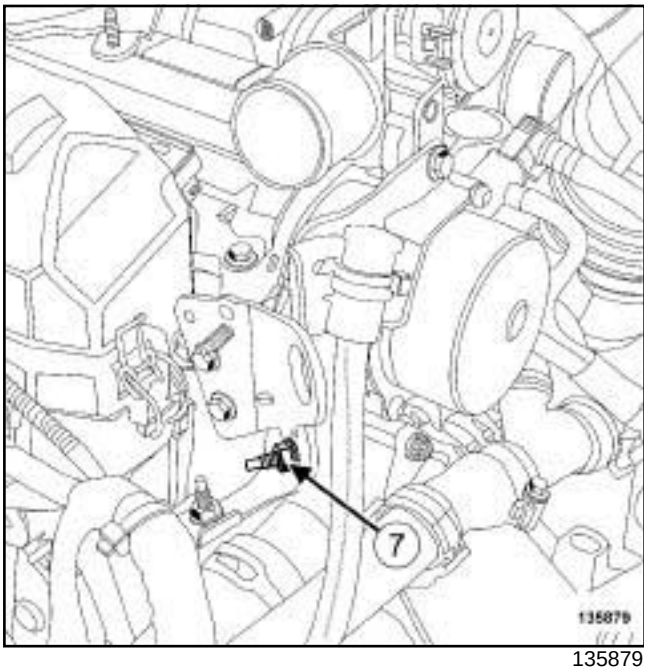

135879

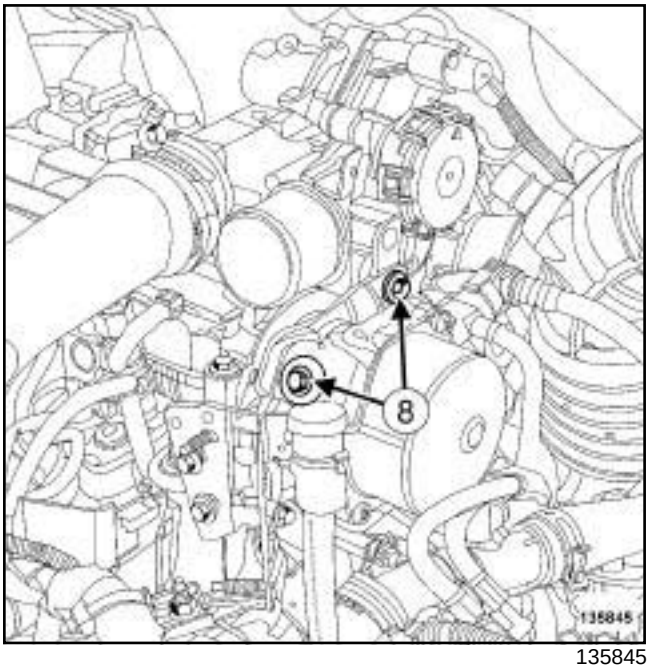

135845

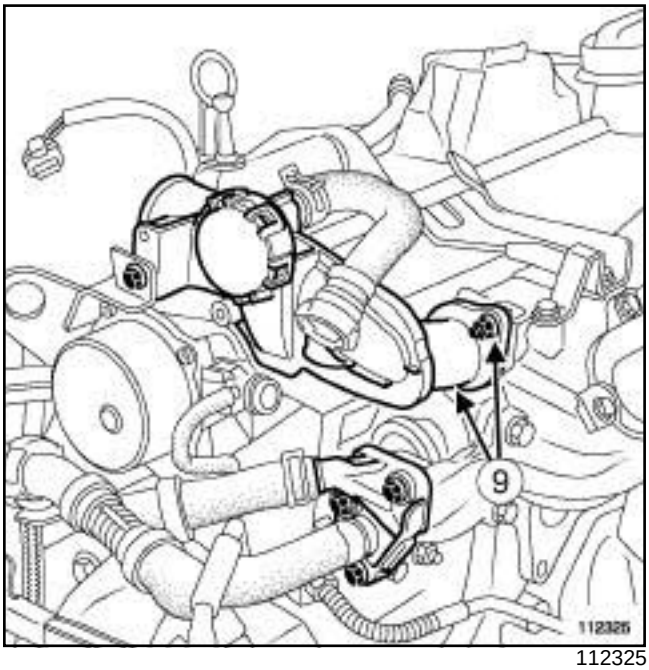

112325

- ❑ Disconnect the oil vapour rebreathing pipe from the air filter unit air outlet pipe at (**5**) .
- ❑ Separate the clip (**6**) of the oil vapour rebreathing pipe on the oil vapour rebreathing valve.
- ❑ Disconnect the oil vapour rebreathing pipe from the oil vapour rebreathing valve.
- ❑ Remove the nut (**7**) of the gearbox breather pipe mounting.
- ❑ Move aside the gearbox breather pipe mounting.
- ❑ Remove:

  - the bolts (**8**) of the oil vapour rebreathing valve

K9K

bracket,

- the oil vapour rebreathing valve bracket.

❏ Disconnect the brake servo pipe from the vacuum pump.

❏ Remove:

- the nuts (**9**) of the oil vapour rebreathing valve,
- the oil vapour rebreathing valve,
- the oil vapour rebreathing valve seal from the oil vapour rebreathing valve.

K9K, and 832

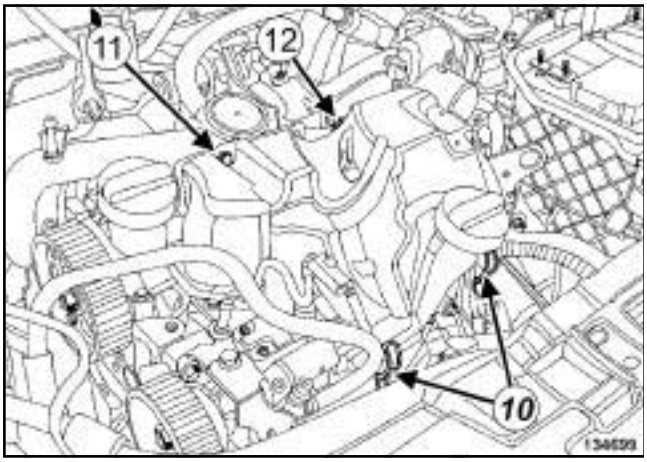

134699

❏ Unclip the injector rail protector cover at (**10**) .

❏ Remove:

- the injector rail protector cover bolt (**11**) ,
- the injector rail protector cover nut (**12**) ,
- the injector rail protector cover.

K9K, and 830

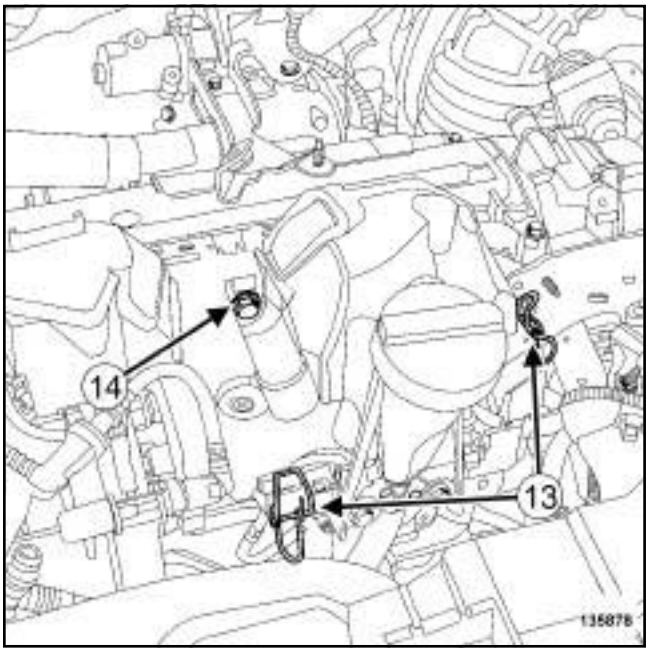

135878

❏ Unclip the injector rail protector cover at (**13**) .

❏ Remove:

- the injector rail protector cover bolt (**14**) ,
- the injector rail protector cover.

K9K

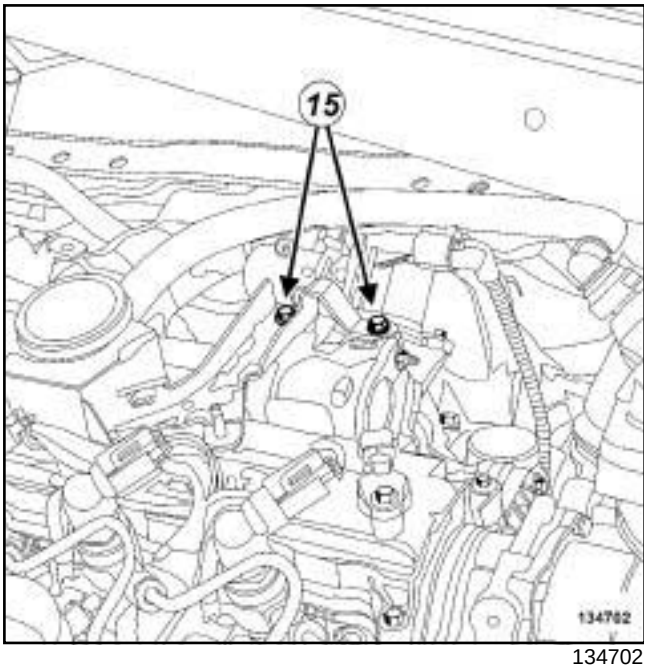

134702

❑ Remove:

- the injector rail protector cover mounting bolts (**15**) ,
- the injector rail protector cover mounting.

K9K, and 832

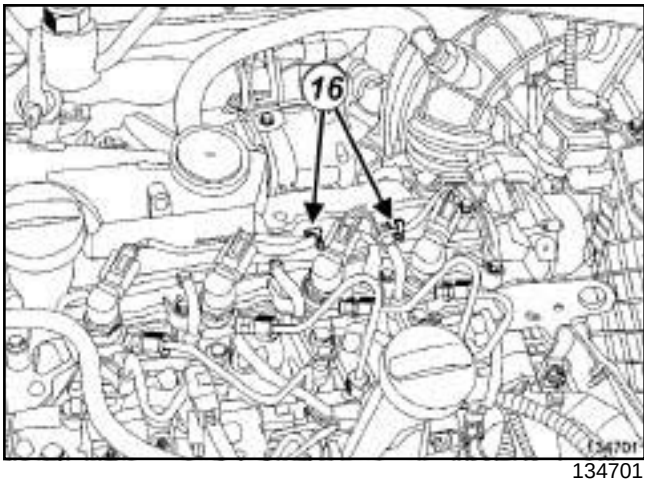

134701

❑ Unclip the diesel injector wiring from the rocker cover at (**16**) .

K9K, and 832

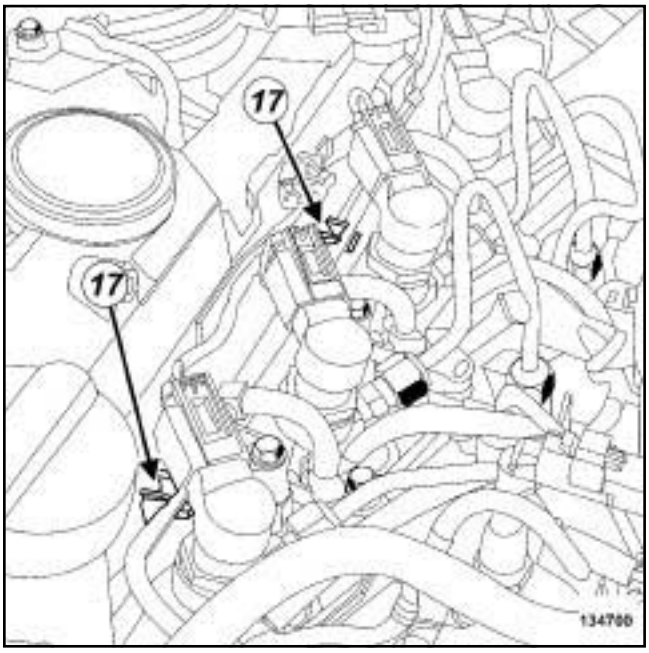

134700

❑ Unclip the fuel return rail from the rocker cover at (**17**) .

K9K

K9K, and 830

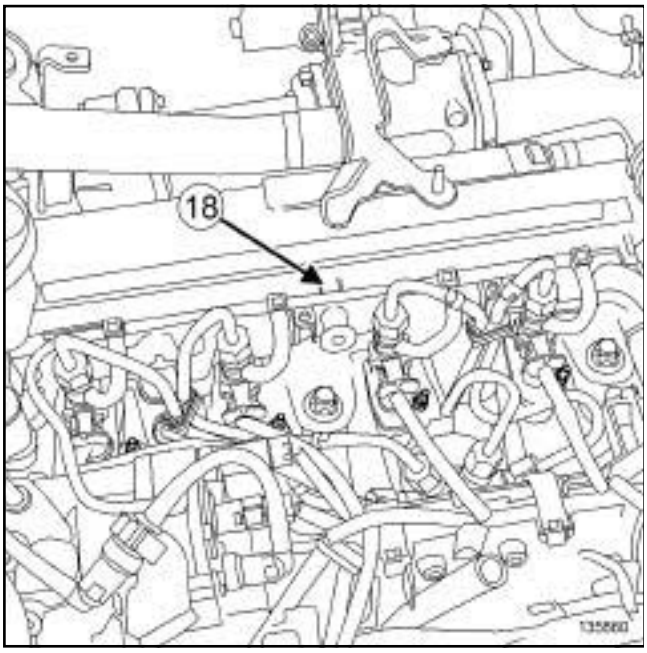

135860

❑ Unclip the fuel return rail from the rocker cover at (**18**) .

K9K, and 832

❑ Disconnect the oil vapour rebreathing pipe from the rocker cover.

II - OPERATION FOR REMOVAL OF PART CONCERNED

K9K, and 832

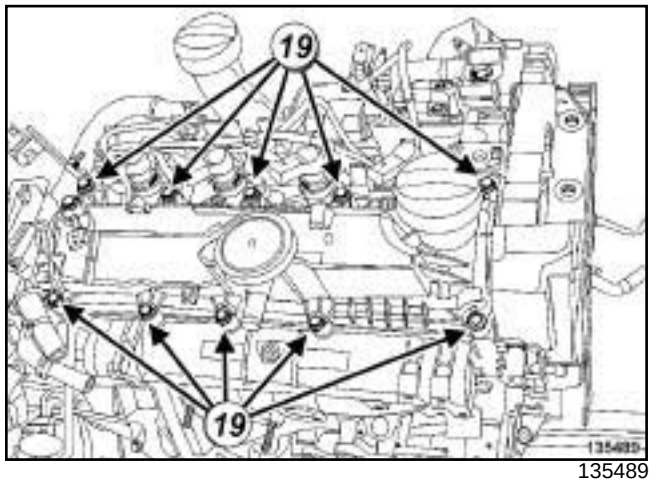

135489

❑ Remove:

- the rocker cover bolts (**19**) ,
- the rocker cover,
- the rocker cover seal.

K9K, and 830

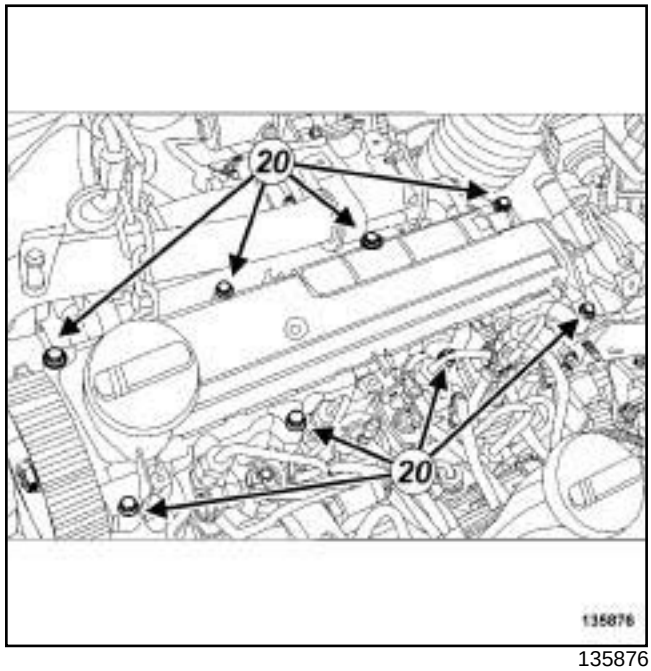

135876

❑ Remove:

- the rocker cover bolts (**20**) ,

K9K

- the rocker cover,
- the rocker cover seal.

REFITTING

I - REFITTING PREPARATION OPERATION

❑ **parts always to be replaced: Rocker cover gasket (10,02,01,12)**.

> **WARNING**
> Do not scrape the joint faces of the aluminium, any damage caused to the joint face will result in a risk of leaks.

> **WARNING**
> To ensure proper sealing, the gasket surfaces must be clean, dry and not greasy (avoid any finger marks).

❑ Clean the cylinder head joint face using **ABRASIVE PADS**.

❑ Use **SURFACE CLEANER** (see **Vehicle: Parts and ingredients for the repairwork**) (04B, Consumables - Products) and **CLEAN CLOTHS** to degrease:

- the cylinder head joint face,
- the rocker cover seal housing in the rocker cover if it is to be reused.

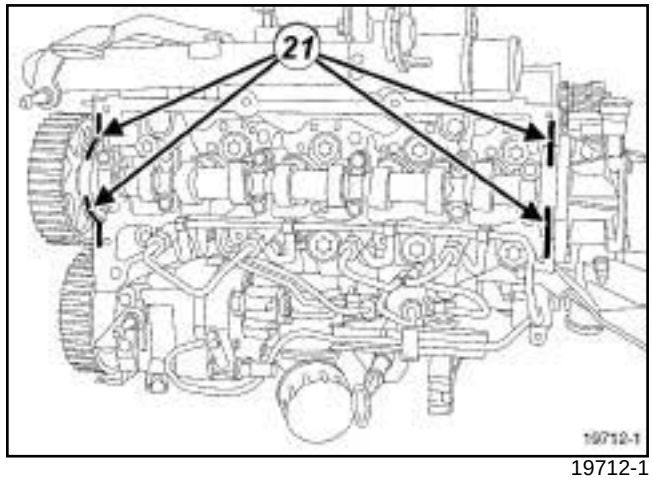

19712-1

❑

> **WARNING**
> Applying excess sealant could cause it to be squeezed out when parts are tightened. A mixture of sealant and fluid could damage certain components (engine, radiator, etc.).

❑ Apply four beads (**21**) of **SILICONE ADHESIVE SEALANT** (see **Vehicle: Parts and ingredients for the repairwork**) (04B, Consumables - Products) **2 mm** in diameter and **10 mm** long.

If replacing the rocker cover

K9K, and 832

❑ Remove the camshaft position sensor from the rocker cover.

❑ Refit the camshaft position sensor onto the new rocker cover.

K9K

II - REFITTING OPERATION FOR PART CONCERNED

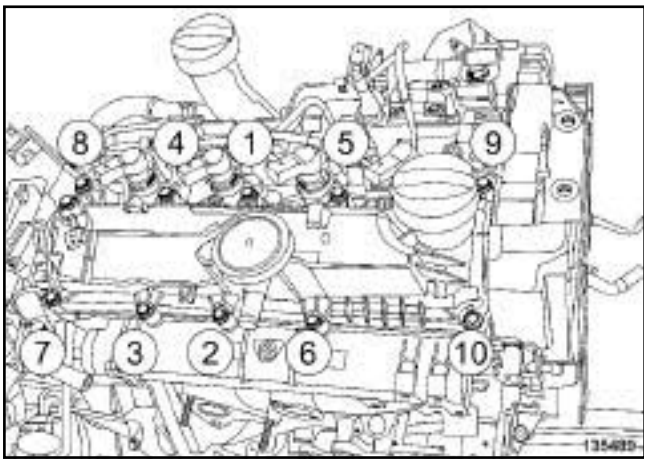

135489

- ❑ Refit the rocker cover, fitted with a new gasket.
- ❑ Tighten to torque and in order the **rocker cover bolts (11 N.m)**.

III - FINAL OPERATION

K9K, and 832

- ❑ Connect the oil vapour rebreathing pipe onto the rocker cover.

- ❑ Clip on the rocker cover:
  - the fuel return rail,
  - the diesel injector wiring.
- ❑ Refit:
  - the injector rail protector cover mounting,
  - the injector rail protector cover.
- ❑ Clip the injector rail protector cover into place.

K9K, and 832

- ❑ Refit the damper valve (see **12A**, **Fuel mixture**, **Air inlet flap: Removal - Refitting**, page **12A-11**) .

K9K, and 830

- ❑ Refit the oil vapour rebreathing valve.
- ❑ Connect the brake servo pipe onto the vacuum pump.
- ❑ Refit the oil vapour rebreathing valve bracket.
- ❑ Fit the gearbox breather pipe mounting.
- ❑ Refit the nut of the gearbox breather pipe mounting.
- ❑ Connect the oil vapour rebreathing pipe to the oil vapour rebreathing valve.
- ❑ Fit the clip of the oil vapour rebreathing pipe on the oil vapour rebreathing valve.
- ❑ Connect the oil vapour rebreathing pipe to the air filter box air outlet pipe.

- ❑ Refit:
  - the turbocharger air outlet pipe (see **12B**, **Turbocharging**, **Intercooler air inlet pipe: Removal - Refitting**, page **12B-41**) ,
  - the upper timing cover.
- ❑ Clip on the upper timing cover.

K9K, and 830

- ❑ Refit the upper timing cover bolt.

- ❑ Refit:
  - the right-hand suspended engine mounting (see **19D**, **Engine mounting**, **Right-hand suspended engine mounting: Removal - Refitting**, page **19D-18**) ,
  - the scoop under the scuttle panel grille (see **Scoop under scuttle panel grille: Removal - Refitting**) (56A, Exterior equipment),
  - the scuttle panel grille (see **Scuttle panel grille: Removal - Refitting**) (56A, Exterior equipment),
  - the windscreen wiper arms (see **Windscreen wiper arm: Removal - Refitting**) (85A, Wiping - Washing),
  - the lower engine tie-bar.

K9K

K9K, and 830

❑ Refit the camshaft position sensor (see **13B**, **Diesel injection**, **Camshaft position sensor: Removal - Refitting**, page **13B-19**) .

❑ Tighten to torque:

- the **lower engine tie-bar bolt on the subframe (180 N.m)**,
- the **lower engine tie-bar bolt on the lower engine tie-bar support (180 N.m)**.

❑ Refit:

- the engine undertray,
- the engine cover.

K4M

Essential special tooling	
Mot. 1490-01	Locking and adjusting camshaft pulleys.

Tightening torques ▽	
rocker cover bolts 23, 18, 19, and 24	**14 N.m**
rocker cover bolts 1 to 17, 20, 21, and 22	**12 N.m**
new nut on the exhaust camshaft sprocket	**30 N.m + 84° ± 4°**
new nut on the inlet camshaft sprocket	**30 N.m + 84° ± 4°**
new bolt on the camshaft dephaser	**100 N.m**

REMOVAL

I - REMOVAL PREPARATION OPERATION

❑ Position the vehicle on a two-post lift (see **Vehicle: Towing and lifting**) (02A, Lifting equipment).

❑ Disconnect the battery (see **Battery: Removal - Refitting**) (80A, Battery).

❑ Remove:

- the engine cover,
- the throttle valve (see **12A**, **Fuel mixture**, **Throttle valve: Removal - Refitting**, page **12A-17**) ,
- the windscreen wiper arms (see **Windscreen wiper arm: Removal - Refitting**) (85A, Wiping - Washing)
- the scuttle panel grille (see **Scuttle panel grille: Removal - Refitting**) (56A, Exterior equipment),
- the scoop under the scuttle panel grille (see **Scoop under scuttle panel grille: Removal - Refitting**) (56A, Exterior equipment),
- the front right-hand wheel (see **Wheel: Removal - Refitting**) (35A, Wheels and tyres),
- the front section of the front right-hand wheel arch liner (see **Front wheel arch liner: Removal - Refitting**) (55A, Exterior protection),
- the engine undertray bolts,
- the engine undertray,
- the lower engine tie-bar (see **19D**, **Engine mounting**, **Lower engine tie-bar: Removal - Refitting**, page **19D-33**) ,
- the accessories belt (see **11A**, **Top and front of engine**, **Accessories belt: Removal - Refitting**, page **11A-7**) ,
- the right-hand suspended engine mounting (see **19D**, **Engine mounting**, **Right-hand suspended engine mounting: Removal - Refitting**, page **19D-18**) ,
- the crankshaft accessories pulley (see **11A**, **Top and front of engine**, **Crankshaft accessories pulley: Removal - Refitting**, page **11A-15**) ,
- the timing belt (see **11A**, **Top and front of engine**, **Timing belt: Removal - Refitting**, page **11A-29**) ,
- the inlet manifold (see **12A**, **Fuel mixture**, **Inlet manifold: Removal - Refitting**, page **12A-23**) ,
- the ignition coils (see **17A**, **Ignition**, **Coils Removal - Refitting**, page **17A-1**) ,
- the oil separator (see **11A**, **Top and front of engine**, **Oil decanter: Removal - Refitting**, page **11A-205**) .

K4M, and 858 or 866

❑ Remove:

- the camshaft dephaser solenoid valve (see **11A**, **Top and front of engine**, **Camshaft dephaser solenoid valve: Removal - Refitting**, page **11A-184**) ,
- the camshaft position sensor (see **17B**, **Petrol injection**, **Camshaft position sensor: Removal - Refitting**, page **17B-13**) .

❑ Position the tool **(Mot. 1490-01)** on the camshaft pulleys.

K4M

K4M, and 848

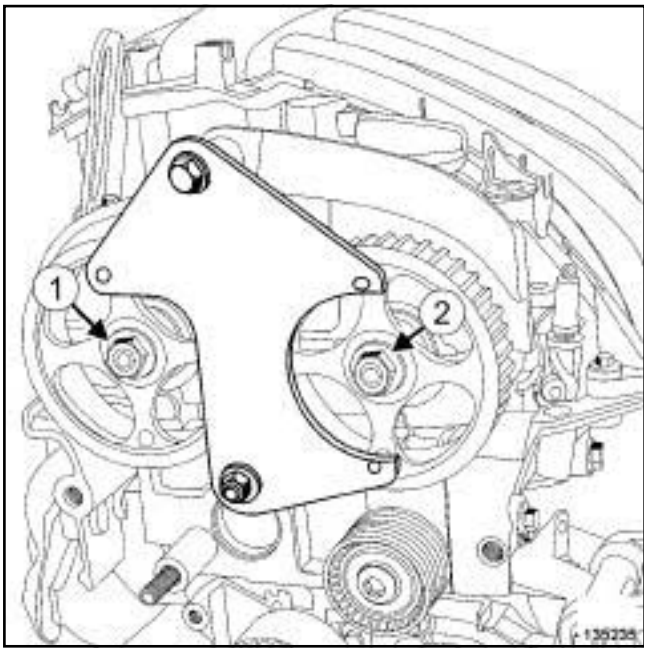

135235

- ❑ Undo:
  - the exhaust camshaft sprocket nut (**1**) ,
  - the inlet camshaft sprocket nut (**2**) .
- ❑ Remove the tool **(Mot. 1490-01)** from the camshaft sprockets.
- ❑ Remove:
  - the exhaust camshaft sprocket nut,
  - the exhaust camshaft sprocket,
  - the inlet camshaft sprocket nut,
  - the inlet camshaft sprocket.

K4M, and 858 or 866

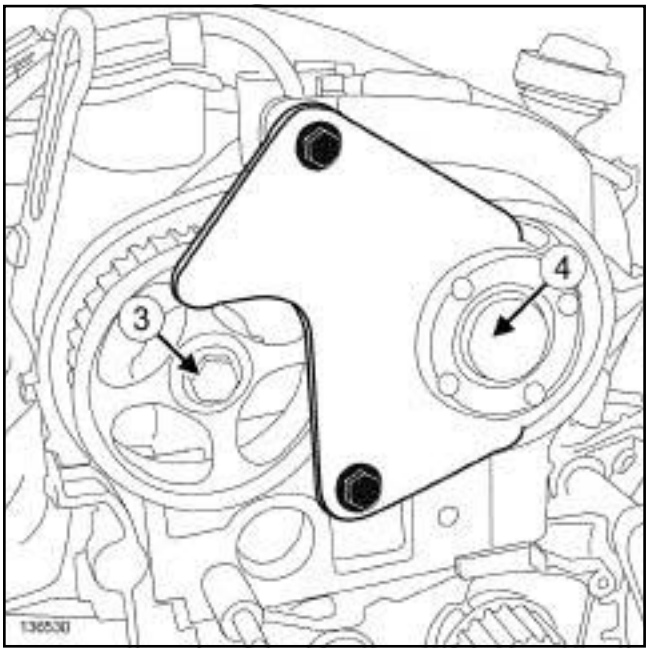

136530

- ❑ Remove the camshaft dephaser blanking cover (**4**) .
- ❑ Undo:
  - the exhaust camshaft sprocket nut (**3**) ,
  - the camshaft dephaser bolt.
- ❑ Remove the tool **(Mot. 1490-01)** from the camshaft sprockets.
- ❑ Remove:
  - the exhaust camshaft sprocket nut,
  - the exhaust camshaft sprocket,
  - the camshaft dephaser bolt,
  - the camshaft dephaser.

K4M

II - OPERATION FOR REMOVAL OF PART CONCERNED

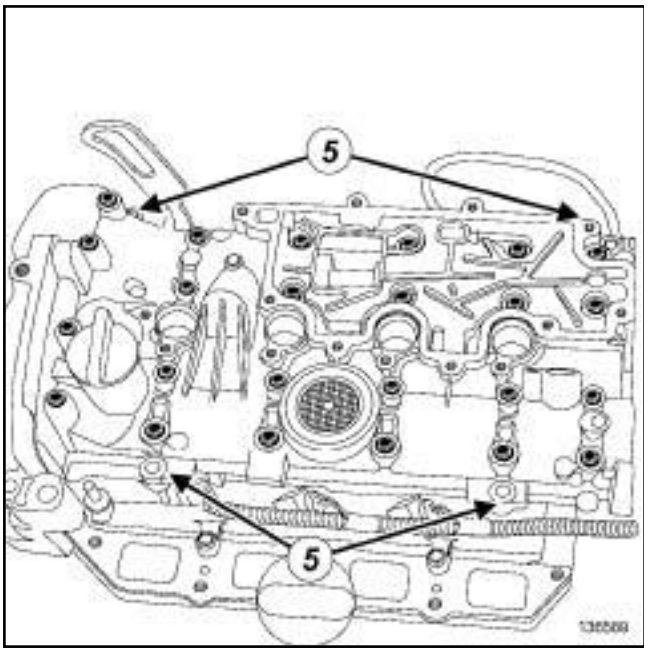

136589

❑ Remove the rocker cover bolts.

> Note:
>
> The rocker cover bolts are not the same length; mark their positions.

❑ Remove the rocker cover vertically by tapping the lugs (**5**) with a copper hammer.

❑ Remove:

- the rocker cover,
- the exhaust camshaft,
- the exhaust camshaft seal,
- the inlet camshaft,
- the inlet camshaft seal.

REFITTING

I - REFITTING PREPARATION OPERATION

❑ **parts always to be replaced: Exhaust camshaft pulley nut (10,02,02,13)**.

K4M, and 848

❑ Always replace the inlet camshaft pulley nut.

K4M, and 858 or 866

❑ **parts always to be replaced: Camshaft dephaser sprocket bolt (10,02,02,06)**.

> **WARNING**
>
> Do not scrape the joint faces of the aluminium, any damage caused to the joint face will result in a risk of leaks.

> **WARNING**
>
> Do not allow this product to drip onto the paintwork.
>
> Clean the cylinder head carefully to avoid any foreign bodies entering the oil return and supply pipes.
>
> Failure to follow this advice could lead to the blocking of the various oil inlet galleries, which would quickly result in engine damage.

> **WARNING**
>
> To ensure proper sealing, the gasket surfaces must be clean, dry and not greasy (avoid any finger marks).

❑ Clean the joint face of the rocker cover and cylinder head with **SUPER CLEANING AGENT FOR JOINT FACES** (see **Vehicle: Parts and ingredients for the repairwork**) (04B, Consumables - Products) to dissolve any seal still adhering.

❑ Apply the product to the part to be cleaned, wait approximately 10 minutes, then remove the residue with a wooden spatula.

> Note:
>
> Do not put oil on the gasket face of the cylinder head cover.

❑ Lubricate the cylinder head camshaft bearings with engine oil.

K4M

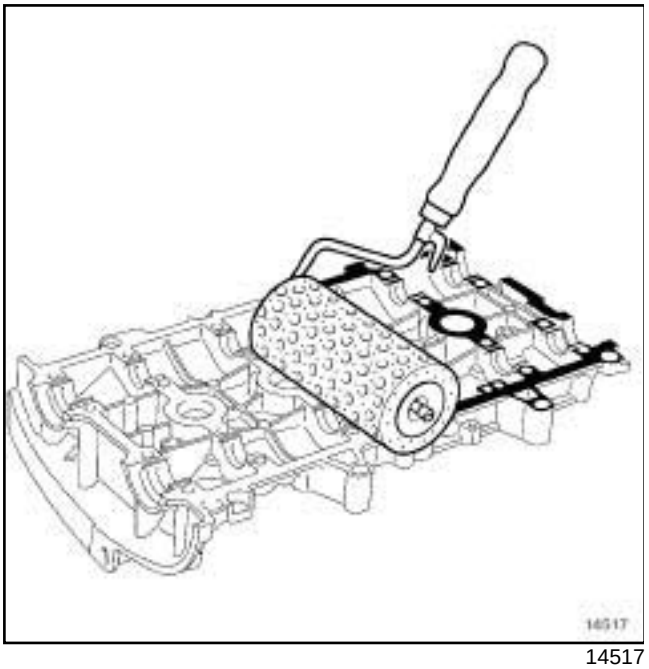

14517

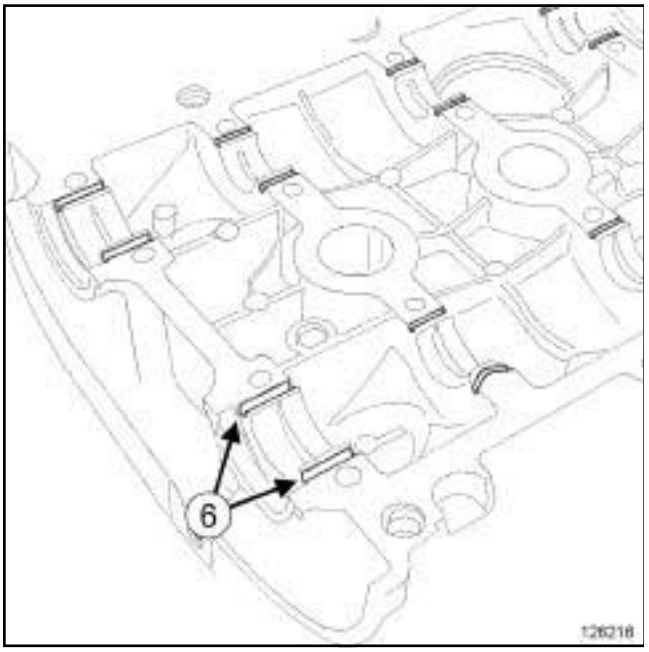

126216

❑ Using a stipple roller, apply **RESIN ADHESIVE** (see **Vehicle: Parts and ingredients for the repairwork**) (04B, Consumables - Products) to the joint face until it is well coated.

> **WARNING**
> Applying excess sealant could cause it to be squeezed out when parts are tightened. A mixture of sealant and fluid could damage certain components (engine, radiator, etc.).

❑ Use a cloth to remove any **RESIN ADHESIVE** in the rocker cover bearings (**6**) .

II - REFITTING OPERATION FOR PART CONCERNED

❑ Refit the camshafts while positioning them correctly (see **Upper engine: Specifications**) (Technical Note 6023A, 10A, Engine and peripherals).

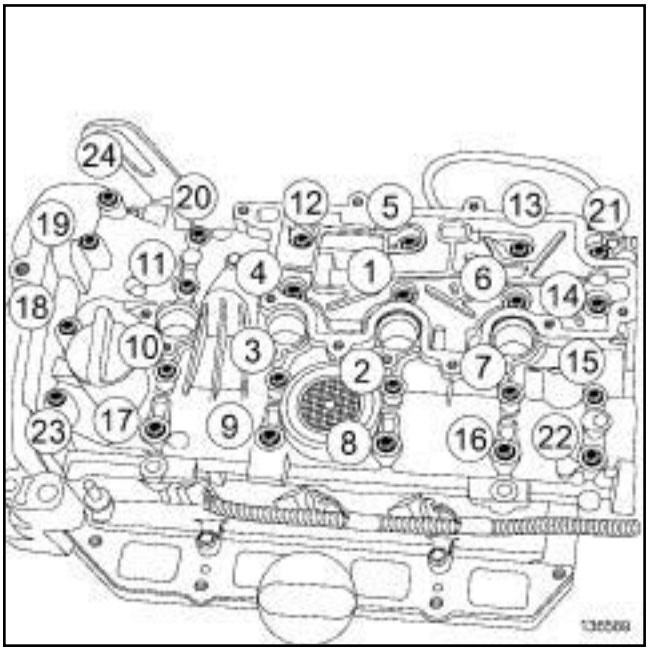

136589

❑ Refit the rocker cover.

❑ Tighten the rocker cover bolts in order as illustrated above.

❑ Tighten to torque:

- **rocker cover bolts 23, 18, 19, and 24 (14 N.m)**,
- **rocker cover bolts 1 to 17, 20, 21, and 22 (12 N.m)**.

III - FINAL OPERATION

❑ Refit the camshaft timing end seals (see **11A**, **Top and front of engine**, **Camshaft seal at timing end: Removal - Refitting**, page **11A-186**) .

K4M, and 848

❑ Refit:

- the inlet camshaft sprocket,
- a new nut on the inlet camshaft sprocket,
- the exhaust camshaft sprocket,
- a new nut on the exhaust camshaft sprocket,

K4M

K4M, and 858 or 866

❑ Refit:

- the camshaft dephaser,
- a new bolt on the camshaft dephaser,
- the exhaust camshaft sprocket,
- a new nut on the exhaust camshaft sprocket,

❑ Position the tool **(Mot. 1490-01)** on the camshaft sprockets.

❑ Torque tighten the **new nut on the exhaust camshaft sprocket (30 N.m + 84° ± 4°)**.

K4M, and 848

❑ Torque tighten the **new nut on the inlet camshaft sprocket (30 N.m + 84° ± 4°)**.

K4M, and 858 or 866

❑ Torque tighten the **new bolt on the camshaft dephaser (100 N.m)**.

❑ Refit the camshaft dephaser blanking cover.

❑ Remove the tool **(Mot. 1490-01)** from the camshaft sprockets.

K4M, and 858 or 866

❑ Refit:

- the camshaft position sensor (see **17B**, **Petrol injection**, **Camshaft position sensor: Removal - Refitting**, page **17B-13**) ,
- the camshaft dephaser solenoid valve (see **11A**, **Top and front of engine**, **Camshaft dephaser solenoid valve: Removal - Refitting**, page **11A-184**) .

❑ Refit:

- the oil separator (see **11A**, **Top and front of engine**, **Oil decanter: Removal - Refitting**, page **11A-205**) ,
- the ignition coils (see **17A**, **Ignition**, **Coils Removal - Refitting**, page **17A-1**) ,
- the inlet manifold (see **12A**, **Fuel mixture**, **Inlet manifold: Removal - Refitting**, page **12A-23**) ,
- the timing belt (see **11A**, **Top and front of engine**, **Timing belt: Removal - Refitting**, page **11A-29**) ,
- the crankshaft accessories pulley (see **11A**, **Top and front of engine**, **Crankshaft accessories pulley: Removal - Refitting**, page **11A-15**) ,
- the right-hand suspended engine mounting (see **19D**, **Engine mounting**, **Right-hand suspended engine mounting: Removal - Refitting**, page **19D-18**) ,
- the accessories belt (see **11A**, **Top and front of engine**, **Accessories belt: Removal - Refitting**, page **11A-7**) ,
- the lower engine tie-bar (see **19D**, **Engine mounting**, **Lower engine tie-bar: Removal - Refitting**, page **19D-33**) ,
- the engine undertray,
- the front section of the front right-hand wheel arch liner (see **Front wheel arch liner: Removal - Refitting**) (55A, Exterior protection),
- the front right-hand wheel (see **Wheel: Removal - Refitting**) (35A, Wheels and tyres),
- the scoop under the scuttle panel grille (see **Scoop under scuttle panel grille: Removal - Refitting**) (56A, Exterior equipment),
- the scuttle panel grille (see **Scuttle panel grille: Removal - Refitting**) (56A, Exterior equipment),
- the windscreen wiper arms (see **Windscreen wiper arm: Removal - Refitting**) (85A, Wiping - Washing)
- the throttle valve (see **12A**, **Fuel mixture**, **Throttle valve: Removal - Refitting**, page **12A-17**) ,
- the engine cover.

❑ Connect the battery (see **Battery: Removal - Refitting**) (80A, Battery).

F4R

Essential special tooling	
Mot. 1453	Multiple-adjusting engine mounting support with retaining straps.
Mot. 1453-01	Additional winder nut on engine lift support Mot. 1453.
Mot. 1390	Support for removing/refitting the engine - gearbox assembly.
Mot. 1716	Removes housing with silicone seals.

Essential equipment
safety strap(s)

Tightening torques ▽	
rocker cover bolts (22), (23), (20), (13)	**8 N.m**
rocker cover bolts (1) to (12), (14) to (19), (21), (24)	**12 N.m**
rocker cover bolts (22), (23), (20), (13)	**12 N.m**
catalytic converter strut nut	**44 N.m**
catalytic converter strut bolt	**8 N.m**
clip for the intercooler air inlet pipe	**6 N.m**

REMOVAL

I - REMOVAL PREPARATION OPERATION

❑ Position the vehicle on a two-post lift (see **Vehicle: Towing and lifting**) (02A, Lifting equipment).

❑ Remove:

- the engine cover,
- the battery (see **Battery: Removal - Refitting**) (80A, Battery),
- the battery tray (see **Battery tray: Removal - Refitting**) (80A, Battery),
- the windscreen wiper arms (see **Scuttle panel grille: Removal - Refitting**) (85A, Wiping - Washing),
- the scuttle panel grille (see **Scuttle panel grille: Removal - Refitting**) (56A, Exterior equipment),
- the scoop under the scuttle panel grille (see **Scoop under scuttle panel grille: Removal - Refitting**) (56A, Exterior equipment),
- the ignition coils (see **17A**, **Ignition**, **Coils Removal - Refitting**, page **17A-1**) .

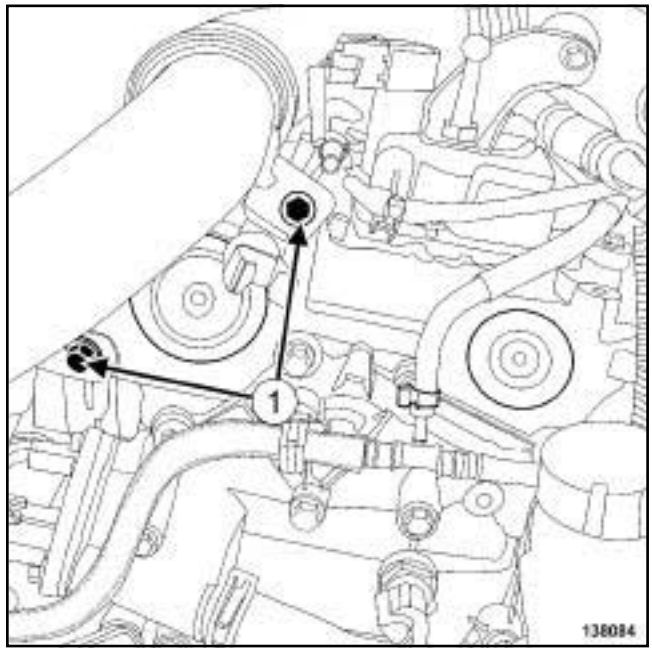

138084

❑ Remove the retaining bolts (**1**) of the intercooler air inlet pipe.

F4R

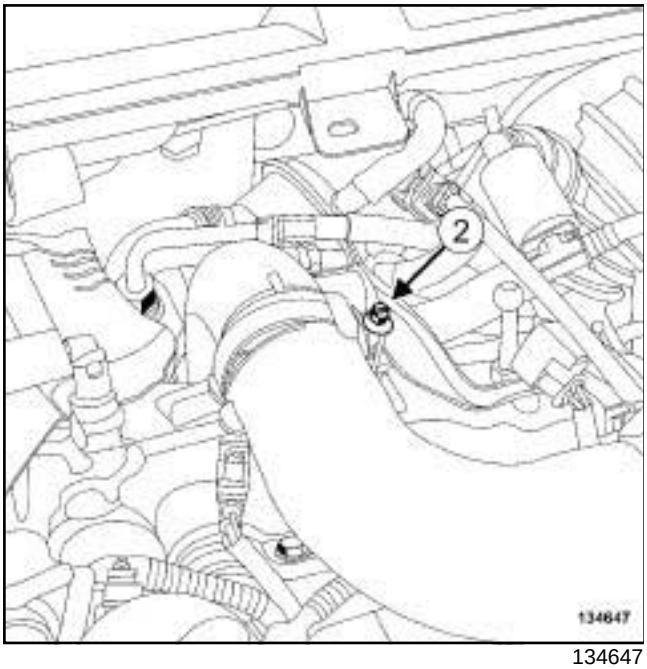

134647

❑ Loosen the clip (**2**) on the intercooler air inlet pipe.

❑ Disconnect the intercooler air inlet pipe.

❑ Remove the intercooler inlet air pipe.

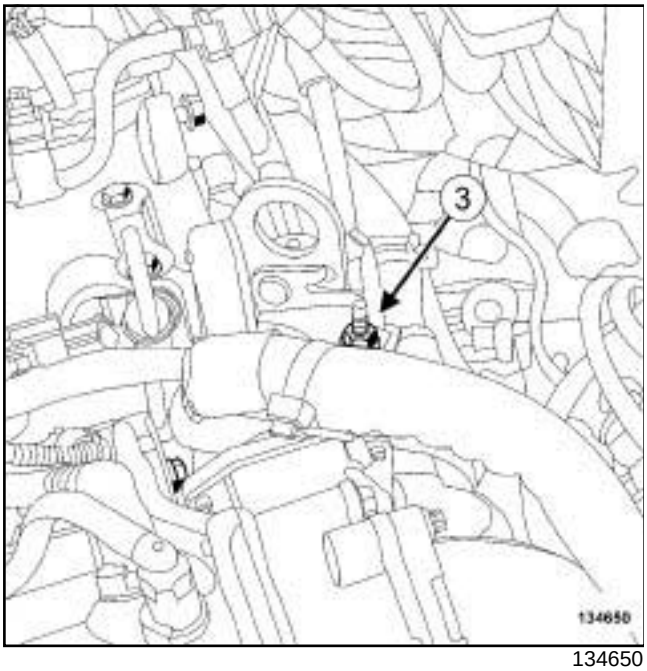

134650

❑ Remove the engine wiring nut (**3**) on the gearbox side lifting eye.

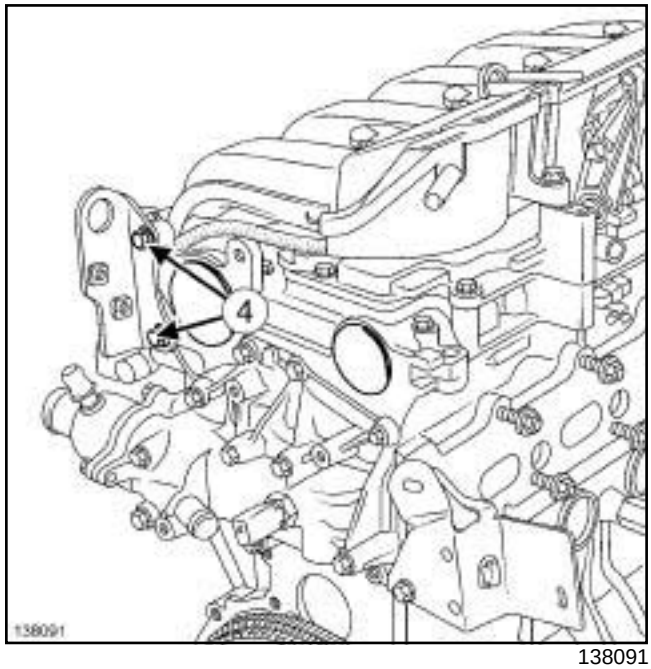

138091

❑ Remove:

- the gearbox side lifting eye bolts (**4**) ,
- the gearbox side lifting eye.

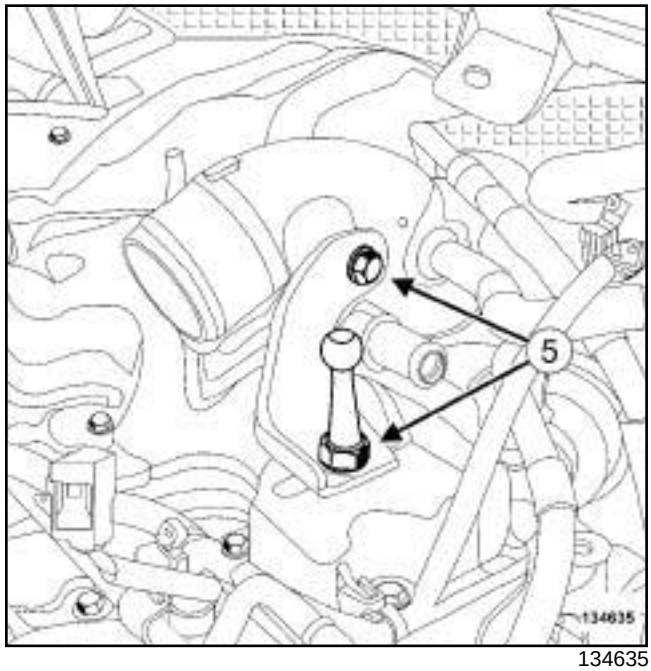

134635

❑ Remove:

- the bolts (**5**) of the turbocharger bracket,
- the turbocharger bracket.

F4R

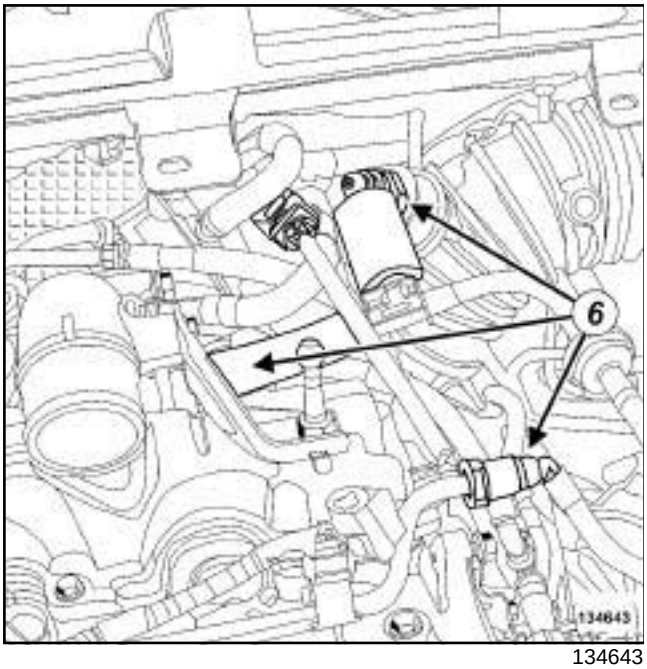

134643

❑ Unclip the oil vapour rebreathing pipe at (**6**) .

❑ Remove the oil vapour rebreathing pipe.

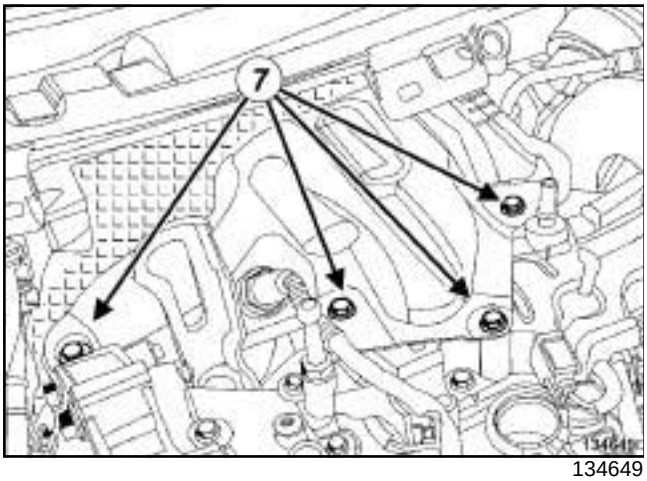

134649

❑ Remove:

- the bolts (**7**) from the turbocharger heat shield,
- the turbocharger heat shield.

WARNING

To prevent the surrounding components from overheating, do not damage (tear, pierce, bend, etc.) a heat shield.

Any damaged heat shields must be replaced.

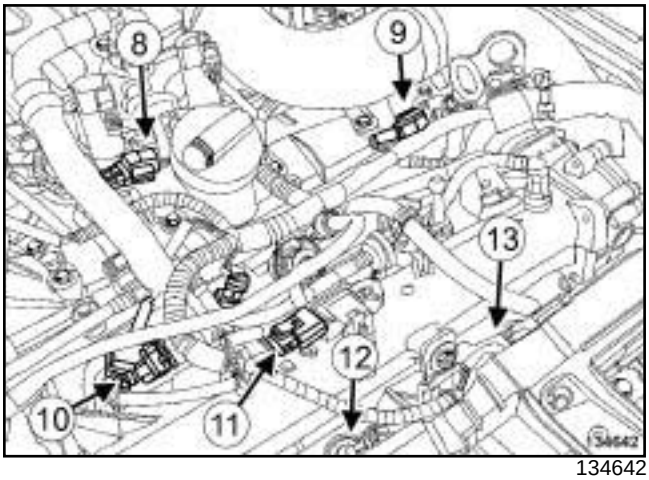

134642

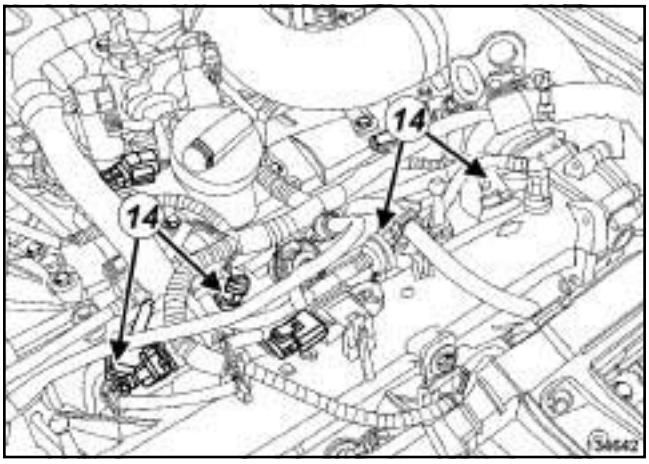

134642

❑ Disconnect:

- the upstream oxygen sensor connector (**8**) ,
- the camshaft position sensor connector (**9**) ,
- the oil vapour recirculation solenoid valve connector (**10**) ,
- the air pressure sensor connector on the inlet manifold (**11**) ,
- the air temperature sensor connector on the intercooler air outlet pipe (**12**) ,
- the air pressure sensor connector on the intercooler air outlet pipe (**13**) ,
- the petrol injector connectors (**14**) .

❑ Move aside the engine wiring.

F4R

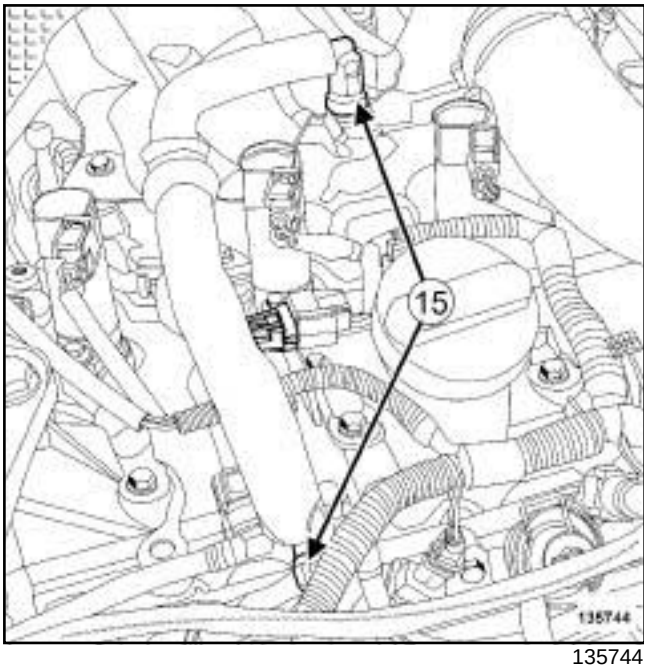

135744

❑ Disconnect the oil vapour rebreathing pipe at (**15**) .

❑ Remove the oil vapour rebreathing pipe.

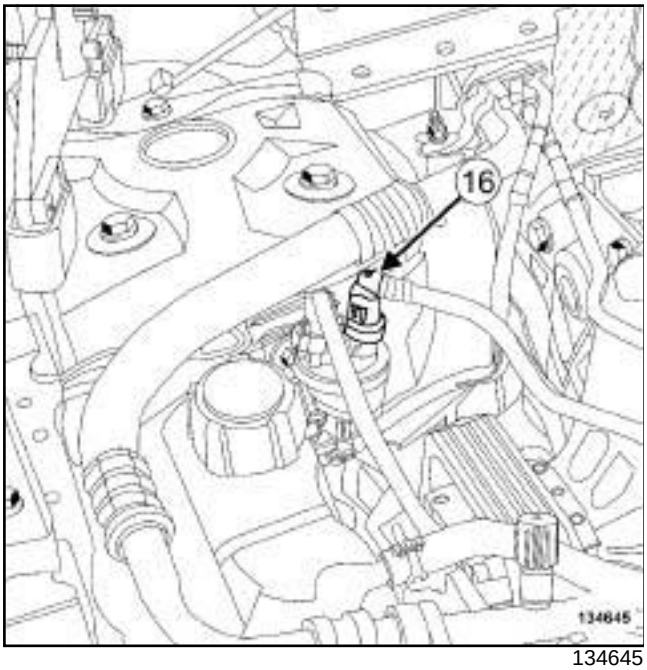

134645

❑ Disconnect the petrol vapour rebreathing pipe at (**16**) .

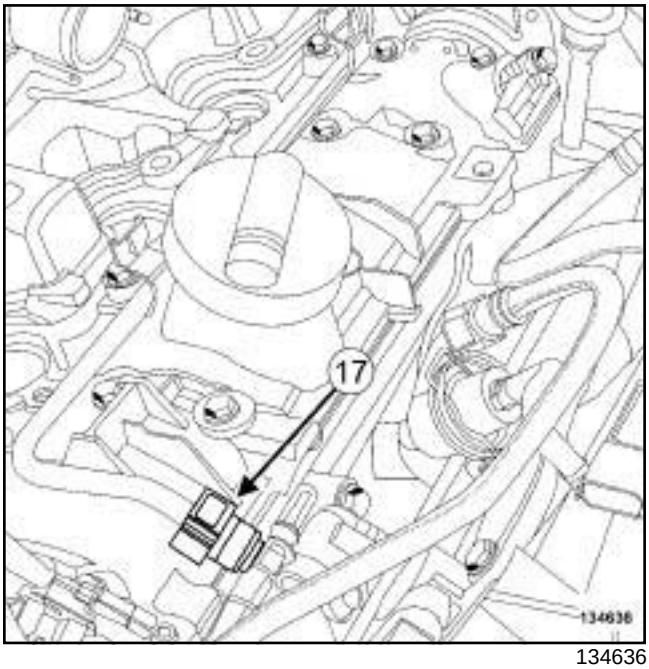

134636

❑ Disconnect the petrol vapour rebreathing pipe at (**17**) .

❑ Remove the petrol vapour rebreathing pipe.

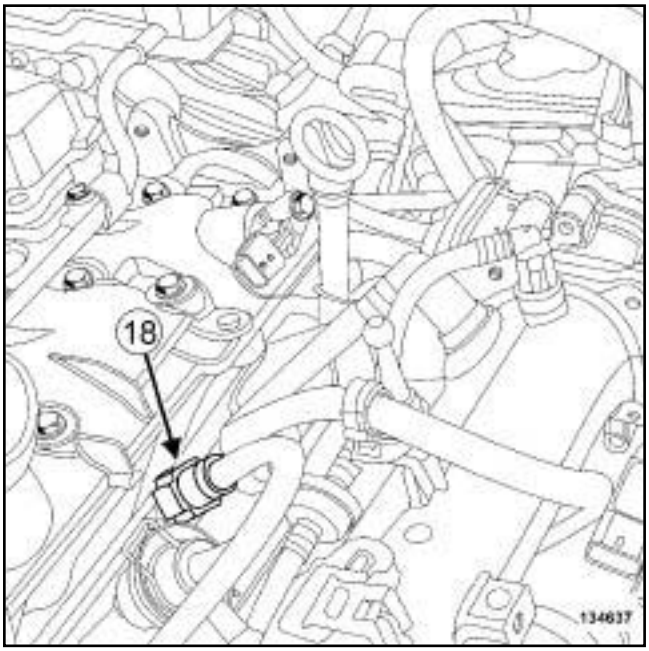

134637

❑ Disconnect the fuel supply pipe at (**18**) .

F4R

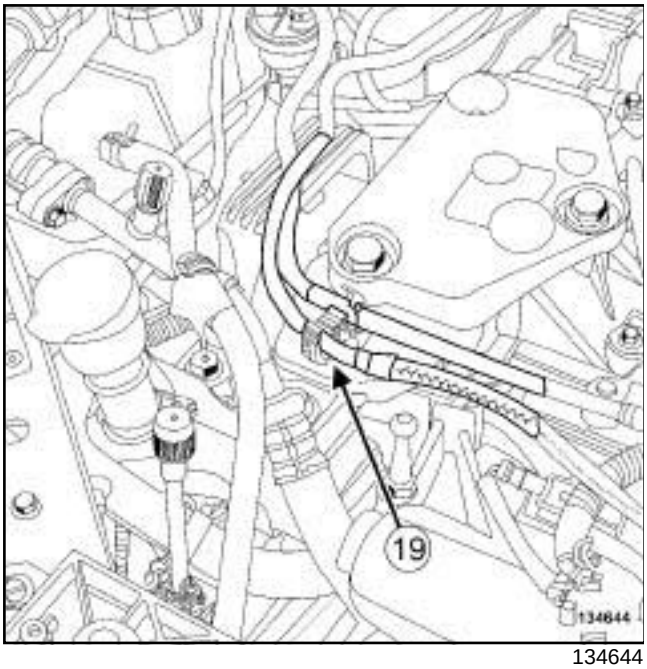

134644

❑ Unclip the fuel supply pipe at (**19**) .

❑ Move aside the fuel supply pipe.

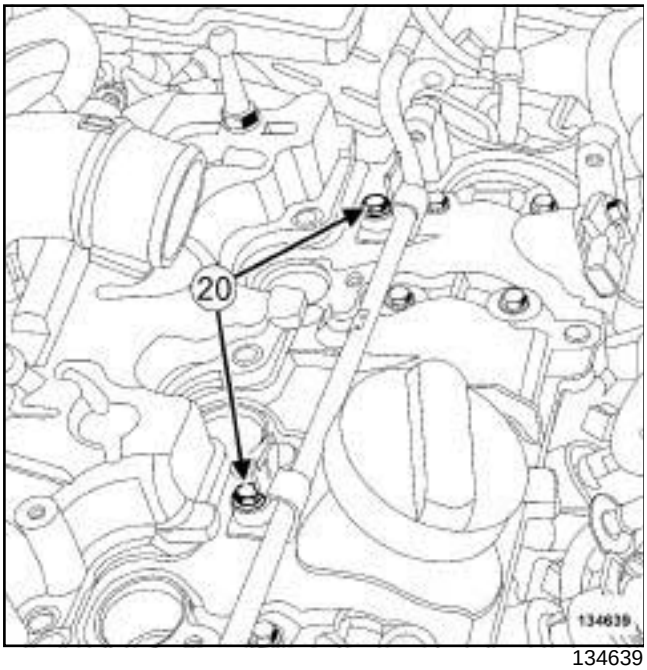

134639

❑ Remove:

- the bolts (**20**) of the oil vapour rebreathing rigid pipe,
- the oil vapour rebreathing rigid pipe,
- the front wheels (see **Wheel: Removal - Refitting**) (35A, Wheels and tyres),
- the front section of the front wheel arch liners (see **Front wheel arch liner: Removal - Refitting**) (55A, Exterior protection),
- the front bumper (see **Front bumper: Removal - Refitting**) (55A, Exterior protection),
- the radiator mounting cross member (see **Radiator support cross member: Removal - Refitting**) (31A, Front axle components),

❑ Drain the manual gearbox (see **Manual gearbox oil: Draining - Refilling**) (21A, Manual gearbox).

❑ Remove:

- the front right-hand driveshaft (see **Front right-hand wheel driveshaft: Removal - Refitting**) (29A, Driveshafts),
- the right-hand differential output seal (see **Differential output seal: Removal - Refitting**) (21A, Manual gearbox),
- the lower engine tie-bar (see **19D**, **Engine mounting**, **Lower engine tie-bar: Removal - Refitting**, page **19D-33**) .

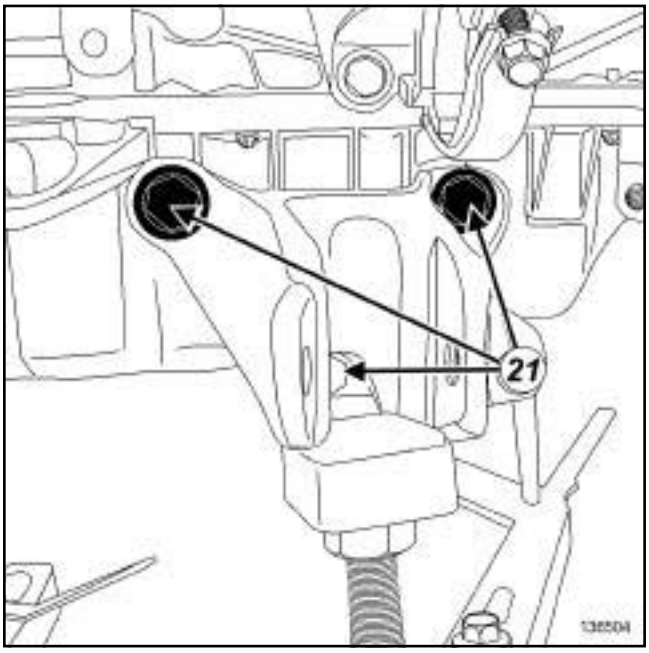

136504

❑ Remove:

- the lower engine tie-bar support bolts (**21**) on the sump,
- the lower engine tie-bar support on the sump.

F4R

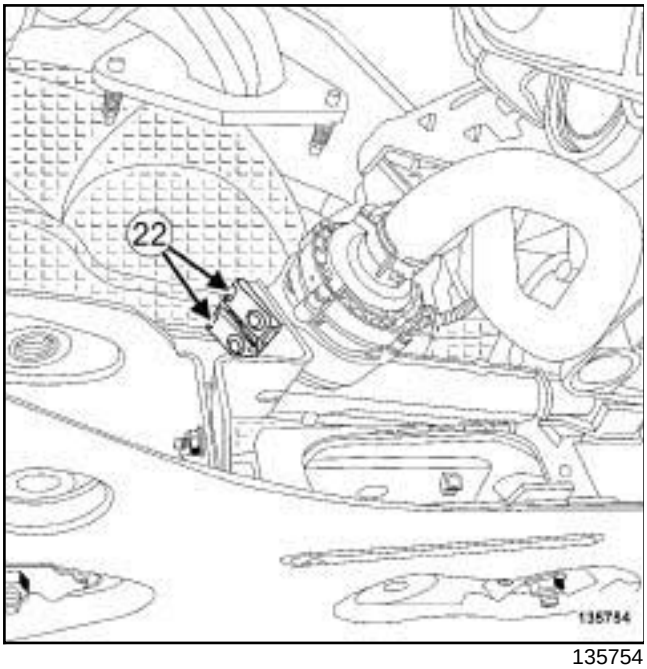

135754

❑ Remove the clips (**22**) from the electric coolant pump.

❑ Move aside the electric water pump.

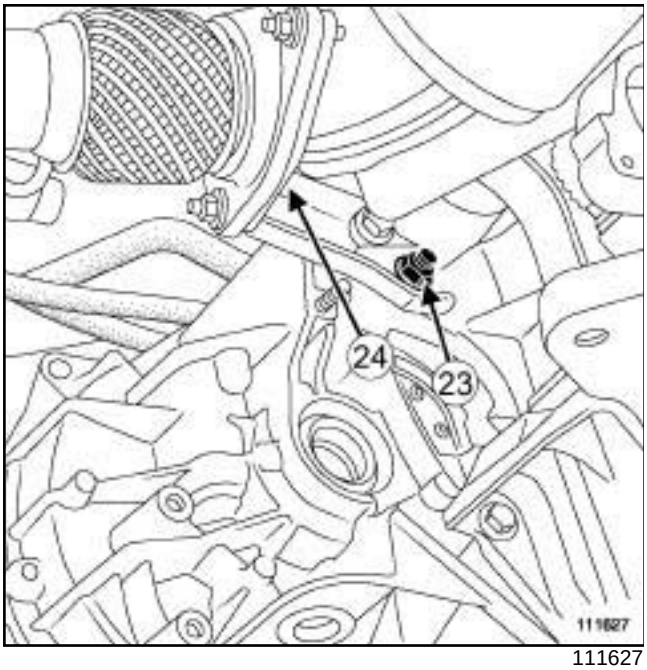

111627

❑ Remove:

- the nut (**23**) and the bolt (**24**) from the catalytic converter strut,
- the catalytic converter strut,
- the connecting hose (see **19B**, **Exhaust**, **Connecting hose: Removal - Refitting**, page **19B-60**) .

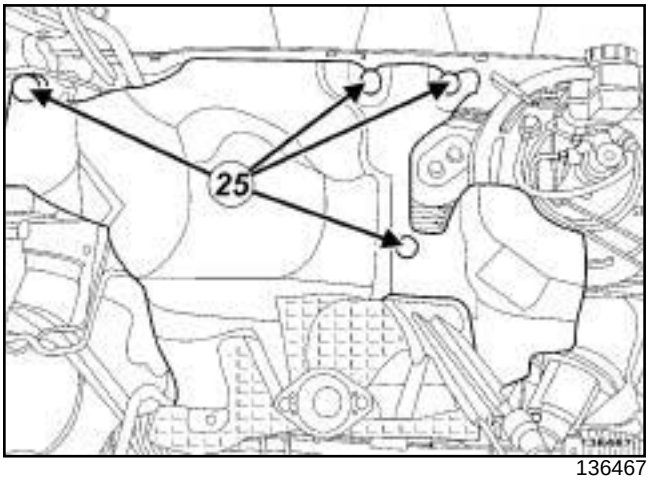

136467

❑ Remove:

- the bolts (**25**) from the upper heat shield,
- the upper heat shield,
- the catalytic converter (see **19B**, **Exhaust**, **Catalytic converter: Removal - Refitting**, page **19B-17**) ,
- the turbocharger (see **12B**, **Turbocharging**, **Turbocharger: Removal - Refitting**, page **12B-8**) ,
- the accessories belt (see **11A**, **Top and front of engine**, **Accessories belt: Removal - Refitting**, page **11A-7**) .

F4R

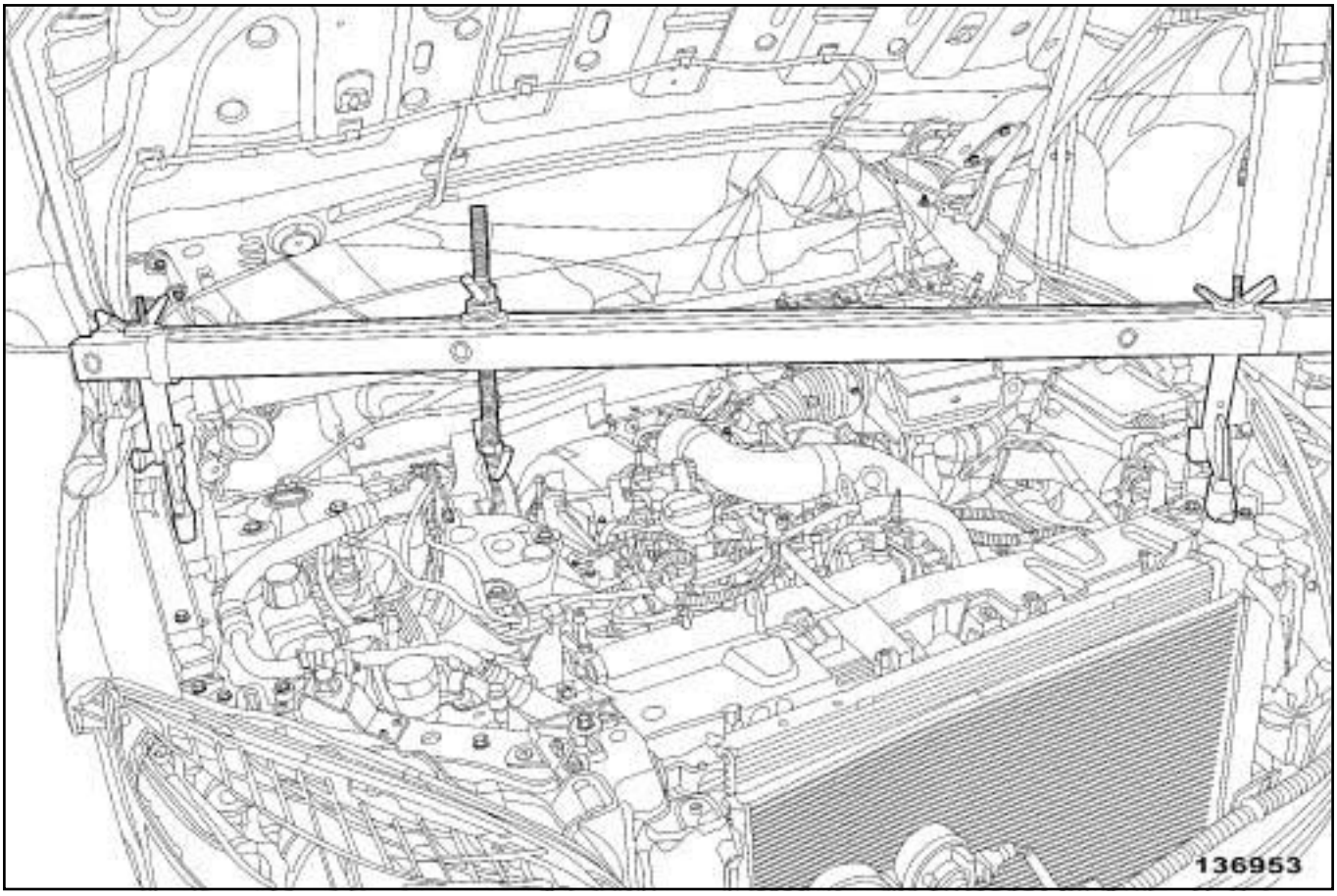

136953

- ❑ Fit the **(Mot. 1453)** equipped with **(Mot. 1453-01)** and a **safety strap(s)**.
- ❑ Remove:
  - the right-hand suspended engine mounting (see **19D**, **Engine mounting**, **Right-hand suspended engine mounting: Removal - Refitting**, page **19D-18**) ,
  - the timing belt (see **11A**, **Top and front of engine**, **Timing belt: Removal - Refitting**, page **11A-29**) .
- ❑ Position the **(Mot. 1390)**.
- ❑ Remove the tool **(Mot. 1453)** equipped with the tool **(Mot. 1453-01)** and the **safety strap(s)**.

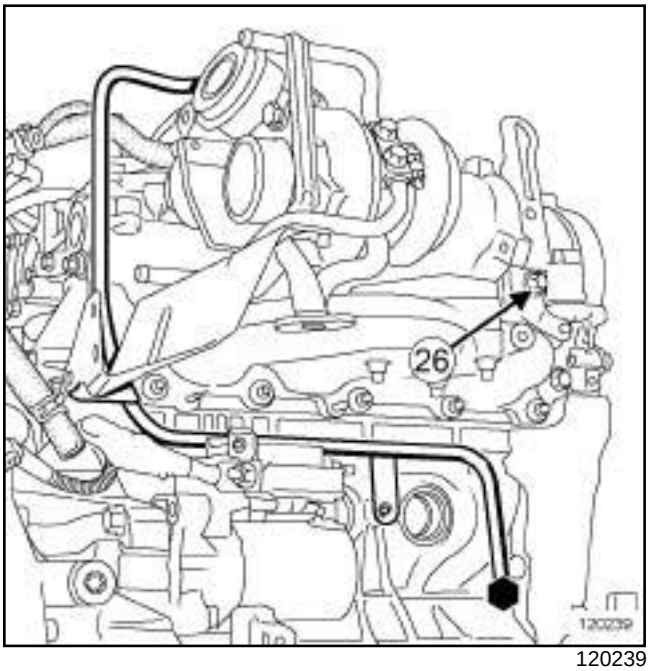

120239

- ❑ Remove:
  - the timing end lifting eye bolt (**26**) ,
  - the lifting eye on the timing end,

- the oil separator (see **11A**, **Top and front of engine**, **Oil decanter: Removal - Refitting**, page **11A-205**) .

II - OPERATION FOR REMOVAL OF PART CONCERNED

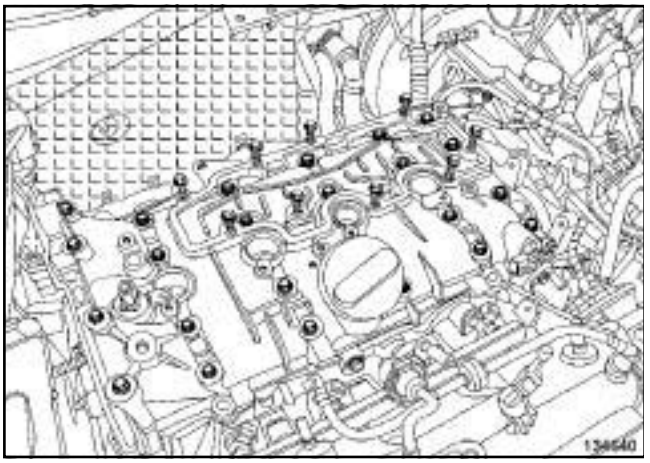

134640

❑

> Note:
>
> The rocker cover bolts are not the same length; mark their positions.

❑ Remove:

- the rocker cover bolts,
- the camshaft seals on the timing end (see **11A**, **Top and front of engine**, **Camshaft seal at timing end: Removal - Refitting**, page **11A-186**) .

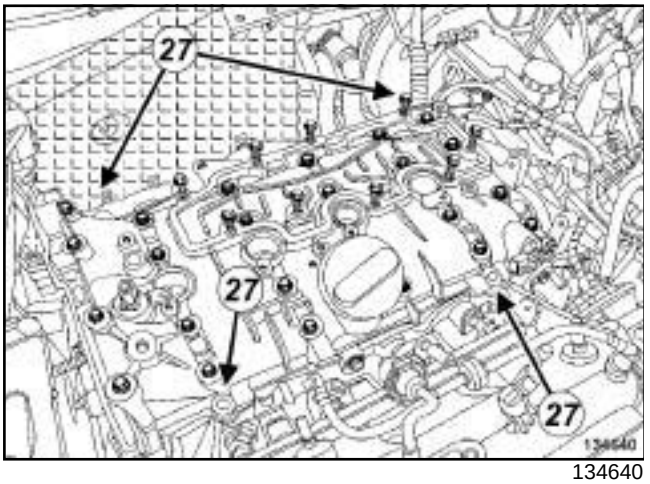

134640

❑ Remove the centring devices (**27**) using a hammer and a roll pin punch to knock them out from above.

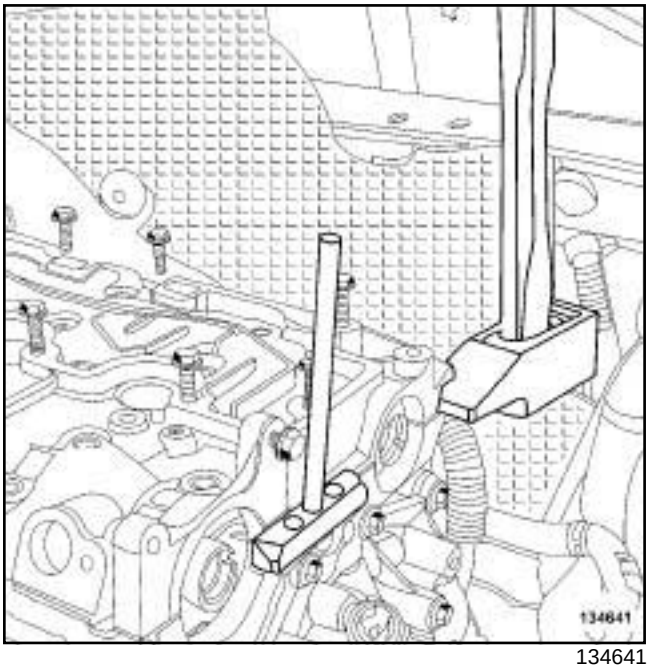

134641

❑ Detach the rocker cover using a hammer as a lever and detach it using the tool **(Mot. 1716)**.

❑ Remove the rocker cover.

REFITTING

I - REFITTING PREPARATION OPERATION

❑ Clean and degrease using **SUPER CLEANING AGENT FOR JOINT FACES** (see **Vehicle: Parts and ingredients for the repairwork**) (04B, Consumables - Products):

- the rocker cover joint face if it is to be re-used,
- the cylinder head joint face.

> **WARNING**
>
> Do not scrape the joint faces of the aluminium, any damage caused to the joint face will result in a risk of leaks.

> **WARNING**
>
> To ensure proper sealing, the gasket surfaces must be clean, dry and not greasy (avoid any finger marks).

❑ **parts always to be replaced: seal between catalytic converter and exhaust downpipe hose (10, 08,02,21)**.

F4R

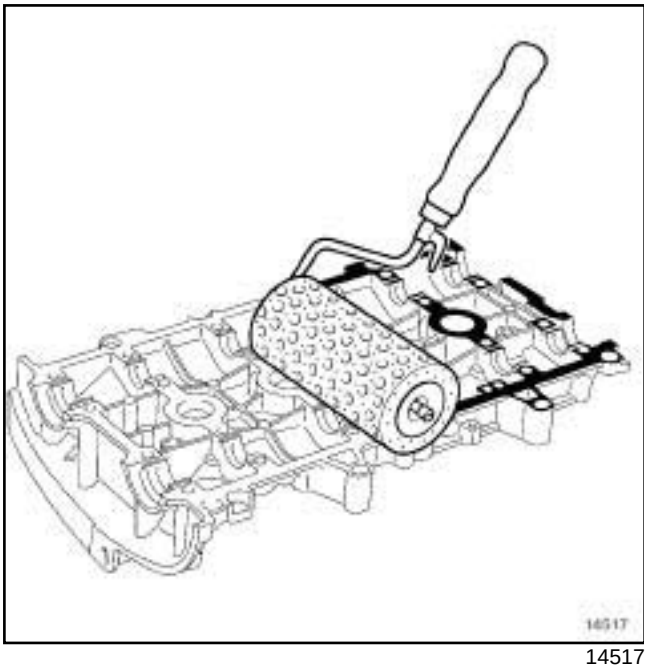

14517

❑

WARNING

Applying excess sealant could cause it to be squeezed out when parts are tightened. A mixture of sealant and fluid could damage certain components (engine, radiator, etc.).

❑ Apply **RESIN ADHESIVE** (see **Vehicle: Parts and ingredients for the repairwork**) (04B, Consumables - Products) using a stipple roller on the joint face of the rocker cover until the joint face is completely coated.

❑ Use a cloth to remove any **RESIN ADHESIVE** on the rocker cover bearings.

❑ Refit the centring devices of the rocker cover using a roll pin punch and a hammer.

II - REFITTING OPERATION FOR PART CONCERNED

❑ Refit the rocker cover.

❑ Fit without tightening the rocker cover bolts.

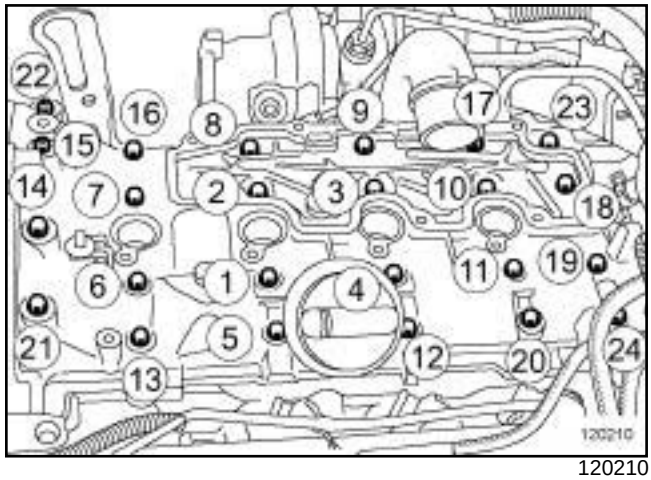

120210

❑ Tighten to torque and in order:

- the **rocker cover bolts (22), (23), (20), (13) (8 N.m)**,
- the **rocker cover bolts (1) to (12), (14) to (19), (21), (24) (12 N.m)**,
- the **rocker cover bolts (22), (23), (20), (13) (12 N.m)**.

III - FINAL OPERATION

❑ Refit:

- new camshaft timing end seals (see **11A**, **Top and front of engine**, **Camshaft seal at timing end: Removal - Refitting**, page **11A-186**) ,
- the oil separator (see **11A**, **Top and front of engine**, **Oil decanter: Removal - Refitting**, page **11A-205**) ,
- the lifting eye on the timing end.

❑ Fit the tool **(Mot. 1453)** equipped with the tool **(Mot. 1453-01)** and the **safety strap(s)**.

❑ Remove the **(Mot. 1390)**.

❑ Refit:

- the timing belt (see **11A**, **Top and front of engine**, **Timing belt: Removal - Refitting**, page **11A-29**) ,
- the right-hand suspended engine mounting (see **19D**, **Engine mounting**, **Right-hand suspended engine mounting: Removal - Refitting**, page **19D-18**) ,
- the accessories belt (see **11A**, **Top and front of engine**, **Accessories belt: Removal - Refitting**, page **11A-7**) ,
- the turbocharger (see **12B**, **Turbocharging**, **Turbocharger: Removal - Refitting**, page **12B-8**) ,

- the catalytic converter (see **19B**, **Exhaust**, **Catalytic converter: Removal - Refitting**, page **19B-17**) ,
- the upper heat shield,
- the connecting hose (see **19B**, **Exhaust**, **Connecting hose: Removal - Refitting**, page **19B-60**) ,
- the catalytic converter strut,

❑ Tighten to torque:

- the **catalytic converter strut nut (44 N.m)**,
- the **catalytic converter strut bolt (8 N.m)**.

❑ Fit the electric coolant pump.

❑ Refit:

- the electric coolant pump clips,
- the lower engine tie-bar support on the sump,
- the lower engine tie-bar (see **19D**, **Engine mounting**, **Lower engine tie-bar: Removal - Refitting**, page **19D-33**) ,
- a right-hand differential output seal (see **Differential output seal: Removal - Refitting**) (21A, Manual gearbox),
- the front right-hand wheel driveshaft (see **Front right-hand wheel driveshaft: Removal - Refitting**) (29A, Driveshafts),

❑ Fill the manual gearbox (see **Manual gearbox oil: Draining - Refilling**) (21A, Manual gearbox).

❑ Refit:

- the radiator mounting cross member (see **Radiator support cross member: Removal - Refitting**) (31A, Front axle components),
- the front bumper (see **Front bumper: Removal - Refitting**) (55A, Exterior protection),
- the front section of the front wheel arch liners (see **Front wheel arch liner: Removal - Refitting**) (55A, Exterior protection),
- the front wheels (see **Wheel: Removal - Refitting**) (35A, Wheels and tyres),
- the oil vapour rebreathing rigid pipe,

❑ Connect the fuel supply pipe.

❑ Clip on the fuel supply pipe.

❑ Refit the fuel vapour rebreathing pipes.

❑ Connect the fuel vapour rebreathing pipes.

❑ Fit the wiring on the engine.

❑ Connect:

- the petrol injector connectors,
- the air pressure sensor connector on the intercooler air outlet pipe,
- the air temperature sensor connector on the intercooler air outlet pipe,
- the air pressure sensor connector on the inlet manifold,
- the oil vapour recirculation solenoid valve connector,
- the camshaft position sensor connector,
- the upstream oxygen sensor connector.

❑ Refit:

- the turbocharger heat shield,
- the oil vapour rebreathing pipe .

❑ Clip on the oil vapour rebreathing pipe.

❑ Refit:

- the turbocharger bracket,
- the gearbox side lifting eye,
- the engine wiring nut onto the lifting eye.

❑ Connect the intercooler air inlet pipe.

❑ Torque tighten the **clip for the intercooler air inlet pipe (6 N.m)**.

❑ Refit:

- the retaining bolts of the intercooler air inlet pipe,
- the ignition coils (see **17A**, **Ignition**, **Coils Removal - Refitting**, page **17A-1**) ,
- the scoop under the scuttle panel grille (see **Scoop under scuttle panel grille: Removal - Refitting**) (56A, Exterior equipment),
- the scuttle panel grille (see **Scuttle panel grille: Removal - Refitting**) (56A, Exterior equipment),
- the windscreen wiper arms (see **Windscreen wiper arm: Removal - Refitting**) (85A, Wiping - Washing),
- the battery tray (see **Battery tray: Removal - Refitting**) (80A, Battery),
- the battery (see **Battery : Removal - Refitting**) (80A, Battery),
- the engine cover.

F9Q

Tightening torques ▽	
rocker cover bolts (initial torque)	**2.5 N.m**
rocker cover bolts	**13 N.m**

REMOVAL

I - REMOVAL PREPARATION OPERATION

❑ Remove:

- the engine cover,
- the injector rail protector (see **13B**, **Diesel injection**, **Injector rail protector: Removal - Refitting**, page **13B-70**) .

II - OPERATION FOR REMOVAL OF PART CONCERNED

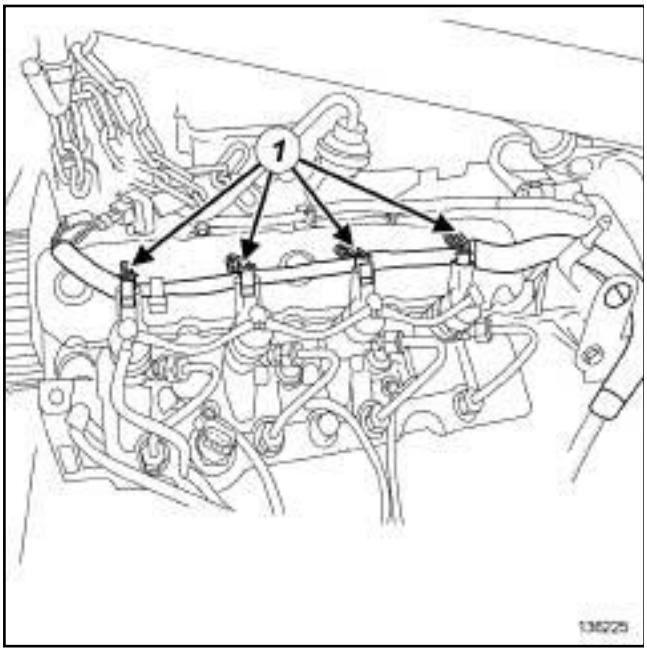

136225

❑ Disconnect the injector connectors (**1**) .

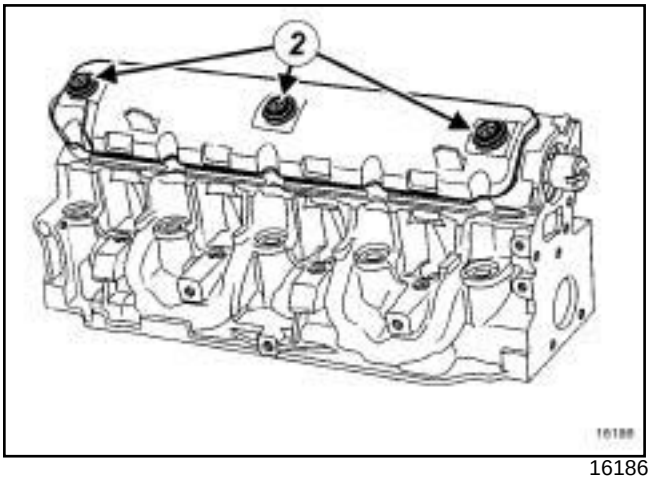

16186

❑ Remove:

- the rocker cover bolts (**2**) ,
- the rocker cover,
- the rocker cover seal.

REFITTING

I - REFITTING PREPARATION OPERATION

❑ **parts always to be replaced: Rocker cover gasket (10,02,01,12)**.

> **WARNING**
> To ensure proper sealing, the gasket surfaces must be clean, dry and not greasy (avoid any finger marks).

❑ Use **SURFACE CLEANER** (see **Vehicle: Parts and ingredients for the repairwork**) (04B, Consumables - Products) to clean and degrease:

- the rocker cover joint face if it is to be re-used,
- the cylinder head joint face.

II - REFITTING OPERATION FOR PART CONCERNED

❑ Refit:

- a new rocker cover seal,
- the rocker cover.

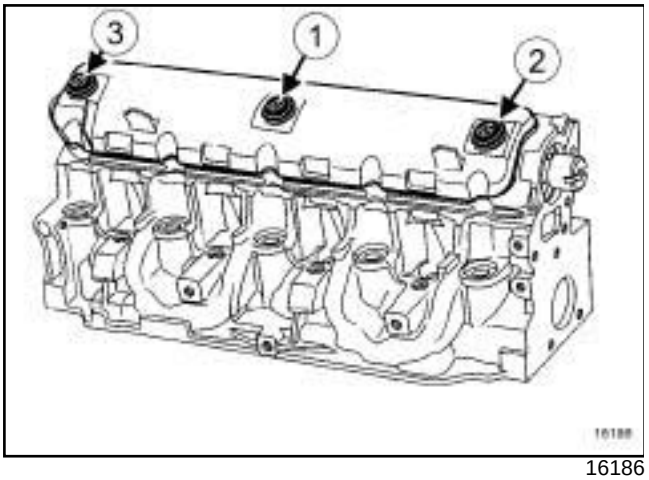

16186

- Pretighten to torque and in order the **rocker cover bolts (initial torque) (2.5 N.m)**.
- Torque tighten in order the **rocker cover bolts (13 N.m)**.
- Connect the injector connectors.

III - FINAL OPERATION

- Refit:
  - the injector rail protector (see **13B**, **Diesel injection**, **Injector rail protector: Removal - Refitting**, page **13B-70**) ,
  - the engine cover.

K4M

REMOVAL

I - REMOVAL PREPARATION OPERATION

❏ Position the vehicle on a two-post lift (see **Vehicle: Towing and lifting**) (02A, Lifting equipment).

❏ Disconnect the battery (see **Battery: Removal - Refitting**) (80A, Battery).

❏ Remove:

- the engine cover,
- the throttle valve (see **12A**, **Fuel mixture**, **Throttle valve: Removal - Refitting**, page **12A-17**) ,
- the windscreen wiper arms (see **Windscreen wiper arm: Removal - Refitting**) (85A, Wiping - Washing),
- the scuttle panel grille (see **Scuttle panel grille: Removal - Refitting**) (56A, Exterior equipment),
- the scoop under the scuttle panel grille (see **Scoop under scuttle panel grille: Removal - Refitting**) (56A, Exterior equipment),
- the front right-hand wheel (see **Wheel: Removal - Refitting**) (35A, Wheels and tyres),
- the front section of the front right-hand wheel arch liner (see **Front wheel arch liner: Removal - Refitting**) (55A, Exterior protection),
- the engine undertray bolts,
- the engine undertray,
- the lower engine tie-bar (see **19D**, **Engine mounting**, **Lower engine tie-bar: Removal - Refitting**, page **19D-33**) ,
- the accessories belt (see **11A**, **Top and front of engine**, **Accessories belt: Removal - Refitting**, page **11A-7**) ,
- the right-hand suspended engine mounting (see **19D**, **Engine mounting**, **Right-hand suspended engine mounting: Removal - Refitting**, page **19D-18**) ,
- the crankshaft accessories pulley (see **11A**, **Top and front of engine**, **Crankshaft accessories pulley: Removal - Refitting**, page **11A-15**) ,
- the timing belt (see **11A**, **Top and front of engine**, **Timing belt: Removal - Refitting**, page **11A-29**) ,
- the inlet manifold (see **12A**, **Fuel mixture**, **Inlet manifold: Removal - Refitting**, page **12A-23**) ,
- the ignition coils (see **17A**, **Ignition**, **Coils Removal - Refitting**, page **17A-1**) ,
- the oil separator (see **11A**, **Top and front of engine**, **Oil decanter: Removal - Refitting**, page **11A-205**) ,

K4M, and 848

❏ Remove the camshaft pulleys.

K4M, and 858 or 866

❏ Remove:

- the camshaft dephaser solenoid valve (see **11A**, **Top and front of engine**, **Camshaft dephaser solenoid valve: Removal - Refitting**, page **11A-184**) ,
- the camshaft position sensor (see **17B**, **Petrol injection**, **Camshaft position sensor: Removal - Refitting**, page **17B-13**) ,
- the camshaft dephaser (see **11A**, **Top and front of engine**, **Camshaft dephaser: Removal - Refitting**, page **11A-177**) ,
- the exhaust camshaft pulley.

❏ Remove:

- the rocker cover (see **11A**, **Top and front of engine**, **Rocker cover: Removal - Refitting**, page **11A-88**) ,
- the camshaft timing end seals (see **11A**, **Top and front of engine**, **Camshaft seal at timing end: Removal - Refitting**, page **11A-186**) .

K4M

II - OPERATION FOR REMOVAL OF PART CONCERNED

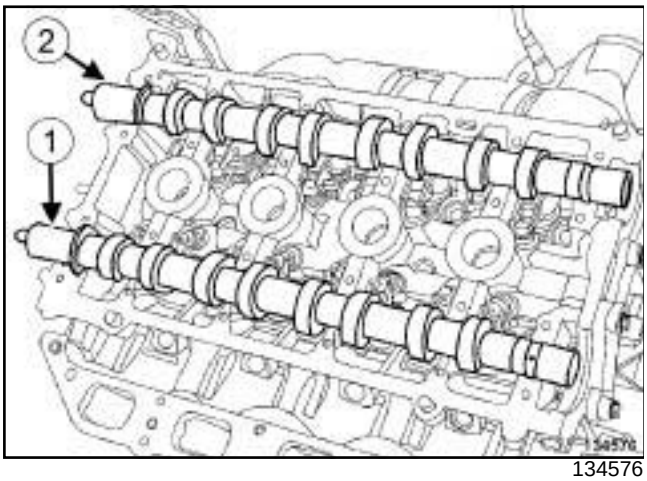

134576

❑ Remove:

- the inlet camshaft (**1**) ,
- the exhaust camshaft (**2**) .

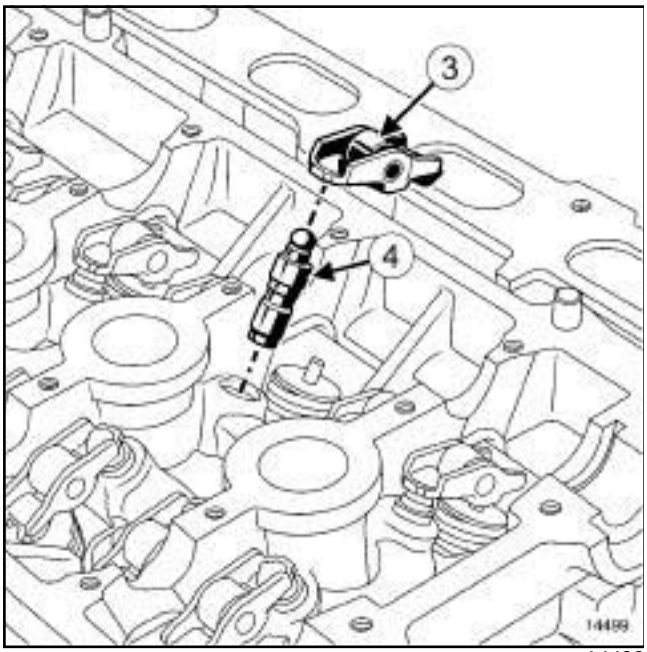

14499

❑ Remove:

- the valve rockers (**3**) ;
- the hydraulic tappets (**4**) .

> Note:
>
> To prevent any risk of unpriming the hydraulic tappets make sure that they are vertical.

REFITTING

I - REFITTING PREPARATION OPERATION

❑ Refit the camshafts while positioning them correctly (see **Upper engine: Specifications**) (Technical Note 6023A, 10A, Engine and peripherals).

❑ Always replace the studs of the inlet and exhaust camshafts if the stud loosens along with the nut of the inlet or exhaust camshaft (see **11A**, **Top and front of engine**, **Camshaft: Removal - Refitting**, page **11A-114**) (Technical Note 3887A, 11A, Top and front of engine).

> Note:
>
> It is essential to reprime the hydraulic tappets as these may become drained if removed for a long time.

❑ To check if re-priming is necessary, press the top of the tappet with your thumb. If the tappet piston depresses, immerse the tappets in a container full of diesel then reprime them.

II - REFITTING OPERATION FOR PART CONCERNED

❑ Refit:

- the hydraulic thrust bearings,
- the valve rockers,
- the inlet camshaft, by lubricating the inlet camshaft bearings,
- the exhaust camshaft, by lubricating the exhaust camshaft bearings.

III - FINAL OPERATION

❑ Refit:

- the rocker cover (see **11A**, **Top and front of engine**, **Rocker cover: Removal - Refitting**, page **11A-88**) ,
- the camshaft timing end seals (see **11A**, **Top and front of engine**, **Camshaft seal at timing end: Removal - Refitting**, page **11A-186**) .

K4M, and 858 or 866

❑ Refit:

- the exhaust camshaft pulley.
- the camshaft dephaser (see **11A**, **Top and front of engine**, **Camshaft dephaser: Removal - Refitting**, page **11A-177**) ,

K4M

- the camshaft position sensor (see **17B**, **Petrol injection**, **Camshaft position sensor: Removal - Refitting**, page **17B-13**) ,
- the camshaft dephaser solenoid valve (see **11A**, **Top and front of engine**, **Camshaft dephaser solenoid valve: Removal - Refitting**, page **11A-184**) .

K4M, and 848

❑ Refit the camshaft pulleys.

❑ Refit:

- the oil separator (see **11A**, **Top and front of engine**, **Oil decanter: Removal - Refitting**, page **11A-205**) ,
- the ignition coils (see **17A**, **Ignition**, **Coils Removal - Refitting**, page **17A-1**) ,
- the inlet manifold (see **12A**, **Fuel mixture**, **Inlet manifold: Removal - Refitting**, page **12A-23**) ,
- the timing belt (see **11A**, **Top and front of engine**, **Timing belt: Removal - Refitting**, page **11A-29**) ,
- the crankshaft accessories pulley (see **11A**, **Top and front of engine**, **Crankshaft accessories pulley: Removal - Refitting**, page **11A-15**) ,
- the right-hand suspended engine mounting (see **19D**, **Engine mounting**, **Right-hand suspended engine mounting: Removal - Refitting**, page **19D-18**) ,
- the accessories belt (see **11A**, **Top and front of engine**, **Accessories belt: Removal - Refitting**, page **11A-7**) ,
- the lower engine tie-bar (see **19D**, **Engine mounting**, **Lower engine tie-bar: Removal - Refitting**, page **19D-33**) ,
- the engine undertray,
- the front section of the front right-hand wheel arch liner (see **Front wheel arch liner: Removal - Refitting**) (55A, Exterior protection),
- the front right-hand wheel (see **Wheel: Removal - Refitting**) (35A, Wheels and tyres),
- the scoop under the scuttle panel grille (see **Scoop under scuttle panel grille: Removal - Refitting**) (56A, Exterior equipment),
- the scuttle panel grille (see **Scuttle panel grille: Removal - Refitting**) (56A, Exterior equipment),
- the windscreen wiper arms (see **Windscreen wiper arm: Removal - Refitting**) (85A, Wiping - Washing),
- the throttle valve (see **12A**, **Fuel mixture**, **Throttle valve: Removal - Refitting**, page **12A-17**) ,
- the engine cover.

❑ Connect the battery (see **Battery: Removal - Refitting**) (80A, Battery).

K9K

Essential special tooling	
Mot. 1606	High pressure pump-pulley retaining tool.

Tightening torques ▽	
bolts of the camshaft bearings	**10 N.m**
camshaft pulley hub bolts	**14 N.m**
camshaft pulley nut	**30 N.m + 86° ± 6°**
rocker cover bolts	**11 N.m**

REMOVAL

I - REMOVAL PREPARATION OPERATION

❑ Position the vehicle on a two-post lift (see **Vehicle: Towing and lifting**) (02A, Lifting equipment).

❑ Disconnect the battery (see **Battery: Removal - Refitting**) (80A, Battery).

❑ Remove:

- the engine cover,
- the front right-hand wheel (see **Wheel: Removal - Refitting**) (35A, Wheels and tyres),
- the front section of the front right-hand wheel arch liner (see **Front wheel arch liner: Removal - Refitting**) (55A, Exterior protection),
- the engine undertray bolts,
- the engine undertray,
- the accessories belt (see **11A**, **Top and front of engine**, **Accessories belt: Removal - Refitting**, page **11A-7**) .
- the crankshaft accessories pulley (see **11A**, **Top and front of engine**, **Crankshaft accessories pulley: Removal - Refitting**, page **11A-15**) ,
- the windscreen wiper arms (see **Windscreen wiper arm: Removal - Refitting**) (85A, Wiping - Washing),
- the scuttle panel grille (see **Scuttle panel grille: Removal - Refitting**) (56A, Exterior equipment),
- the scoop under the scuttle panel grille (see **Scoop under scuttle panel grille: Removal - Refitting**) (56A, Exterior equipment),
- the right-hand suspended engine mounting (see **19D**, **Engine mounting**, **Right-hand suspended engine mounting: Removal - Refitting**, page **19D-18**) .

K9K, and 830

❑ Remove the camshaft position sensor (see **13B**, **Diesel injection**, **Camshaft position sensor: Removal - Refitting**, page **13B-19**) .

❑ Remove:

- the timing belt (see **11A**, **Top and front of engine**, **Timing belt: Removal - Refitting**, page **11A-29**) ,
- the turbocharger air outlet pipe (see **12B**, **Turbocharging**, **Intercooler air inlet pipe: Removal - Refitting**, page **12B-41**) .

K9K, and 832

❑ Remove the damper valve (see **12A**, **Fuel mixture**, **Air inlet flap: Removal - Refitting**, page **12A-11**) .

K9K, and 830

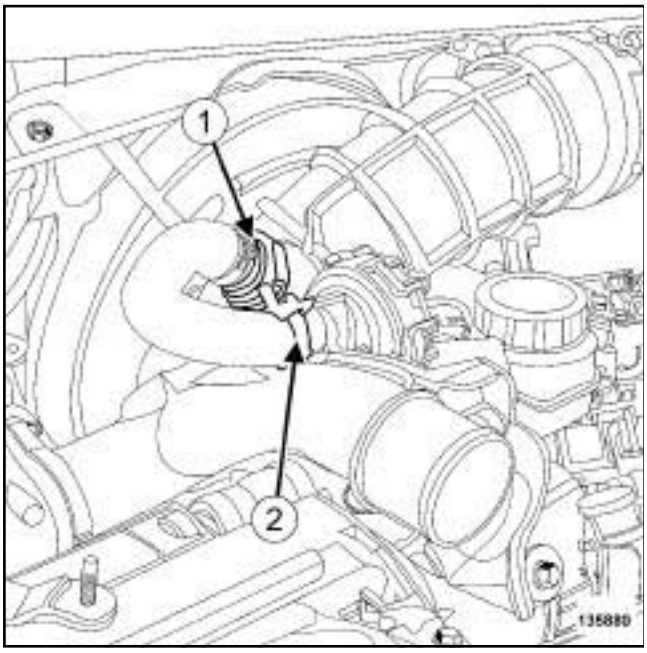

135880

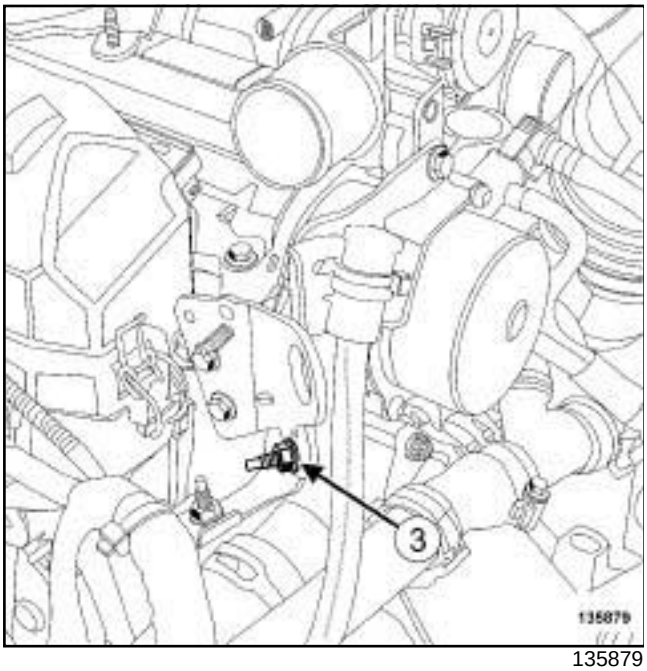

135879

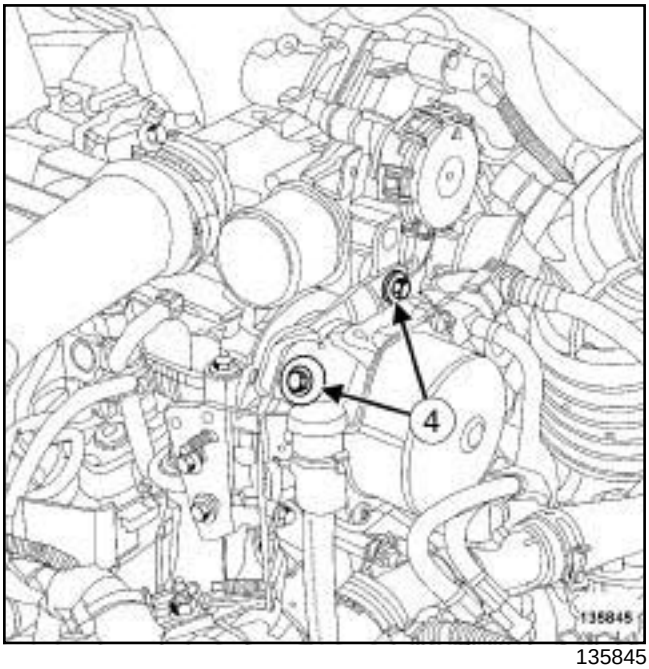

135845

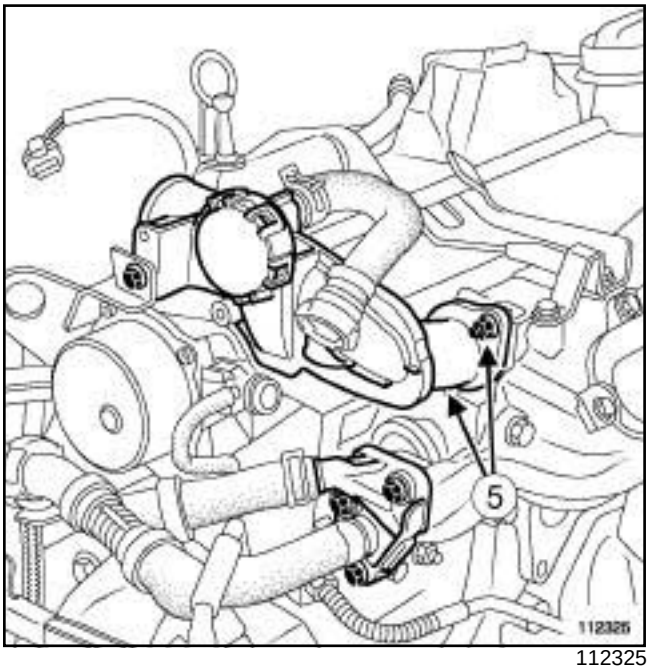

112325

- ❑ Disconnect the oil vapour rebreathing pipe from the air filter unit air outlet pipe at (**1**) .
- ❑ Separate the clip (**2**) of the oil vapour rebreathing pipe on the oil vapour rebreathing valve.
- ❑ Disconnect the oil vapour rebreathing pipe from the oil vapour rebreathing valve.
- ❑ Remove the nut (**3**) from the gearbox breather pipe mounting.
- ❑ Move aside the gearbox breather pipe mounting.
- ❑ Remove:
  - the bolts (**4**) of the oil vapour rebreathing valve

K9K

bracket,

- the oil vapour rebreathing valve bracket.

❏ Disconnect the brake servo pipe from the vacuum pump.

❏ Remove:

- the nuts (**5**) of the oil vapour rebreathing valve,
- the oil vapour rebreathing valve,
- the oil vapour rebreathing valve seal from the oil vapour rebreathing valve.

K9K, and 832

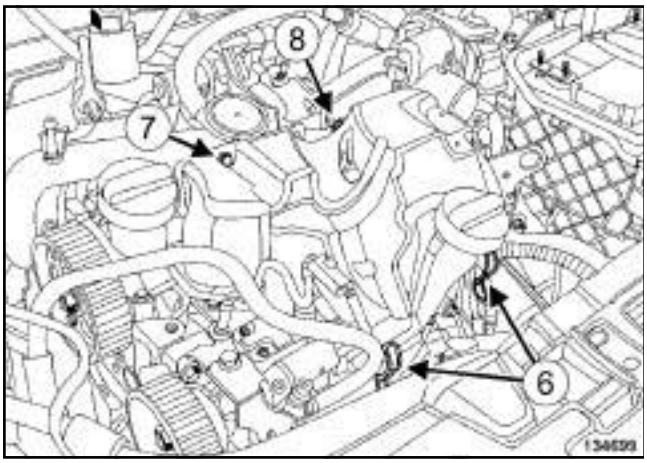

134699

❏ Unclip the injector rail protector cover at (**6**) .

❏ Remove:

- the injector rail protector cover bolt (**7**) ,
- the injector rail protector cover nut (**8**) ,
- the injection rail protector cover,

K9K, and 830

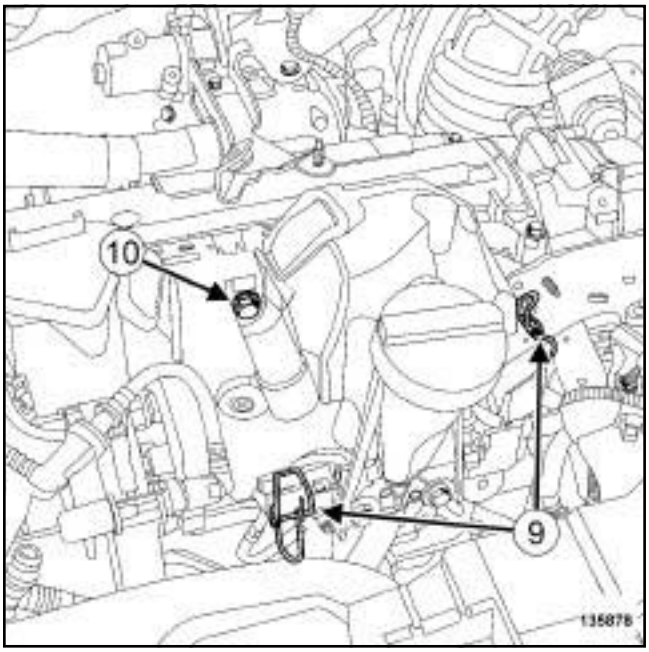

135878

❏ Unclip the injector rail protector cover at (**9**) .

❏ Remove:

- the injector rail protector cover bolt (**10**) ,
- the injection rail protector cover,

K9K

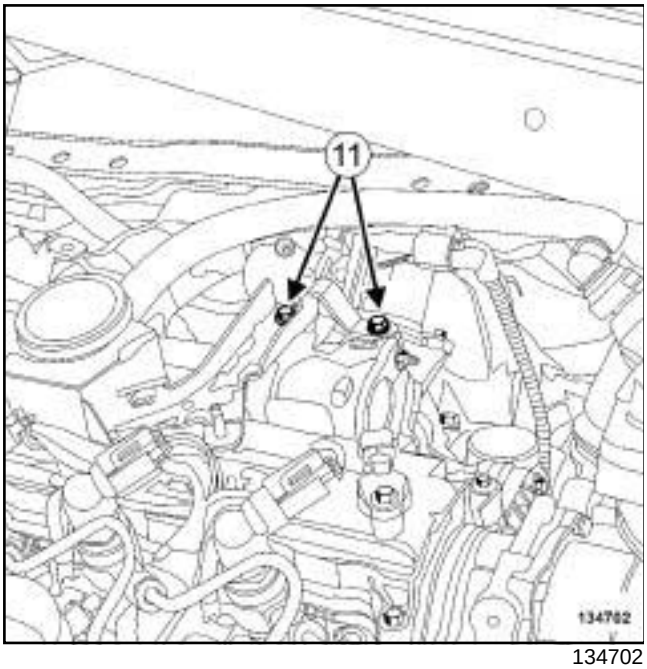

134702

❑ Remove:

- the injector rail protector cover mounting bolts (**11**) ,
- the injector rail protector cover mounting.

K9K, and 832

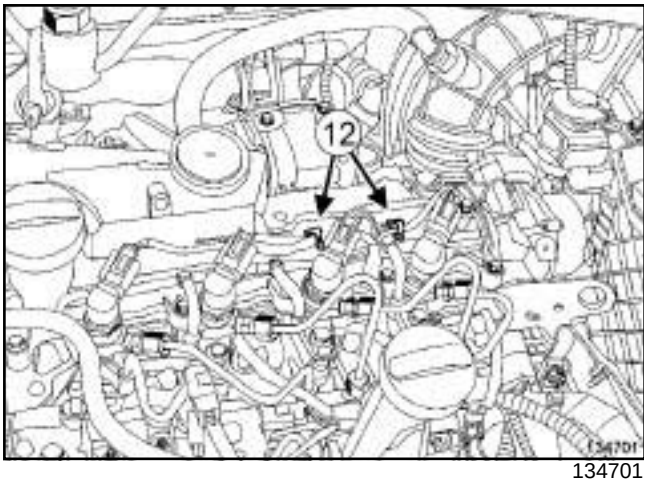

134701

❑ Unclip the diesel injector wiring from the rocker cover at (**12**) .

K9K, and 832

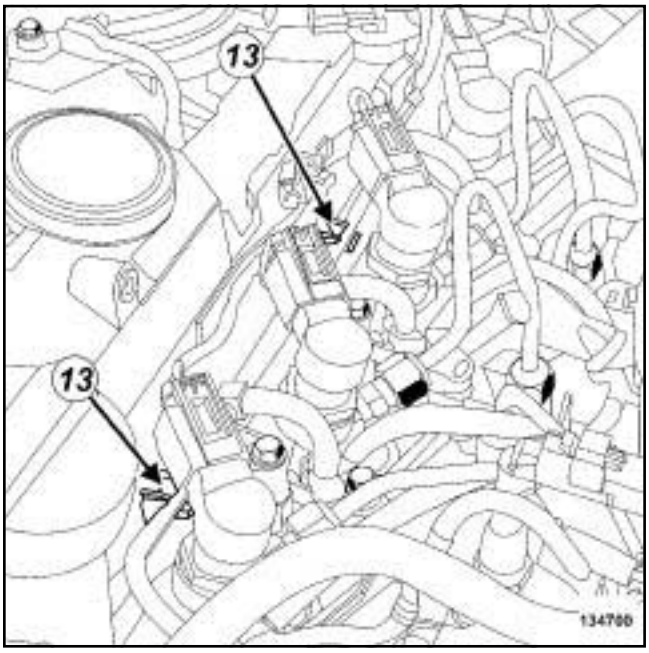

134700

❑ Unclip the fuel return rail from the rocker cover at (**13**) .

K9K

K9K, and 830

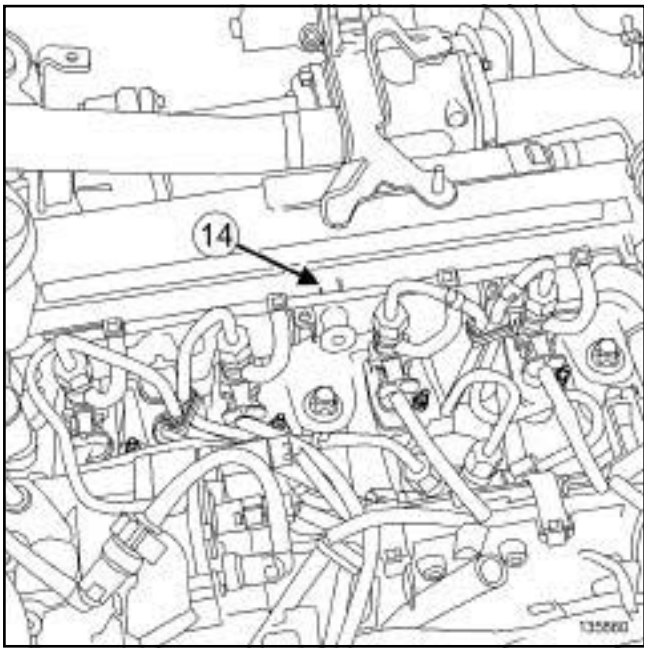

135860

❑ Unclip the fuel return rail from the rocker cover at (**14**) .

K9K, and 832

❑ Disconnect the oil vapour rebreathing pipe from the rocker cover.

K9K, and 832

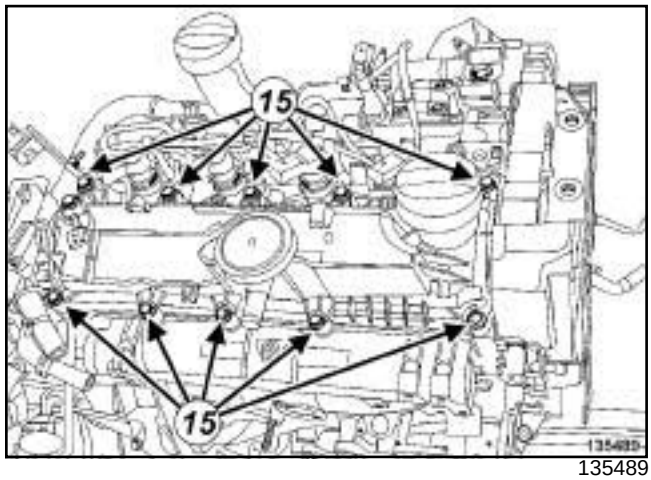

135489

❑ Remove:

- the rocker cover bolts (**15**) ,
- the rocker cover,
- the rocker cover seal.

K9K, and 830

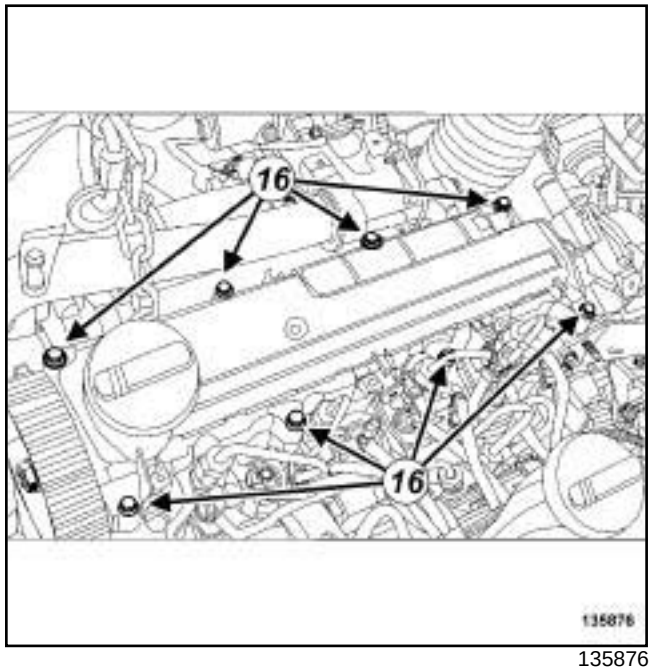

135876

❑ Remove:

- the rocker cover bolts (**16**) ,
- the rocker cover,

- the rocker cover seal.

❑ Remove the vacuum pump (see **Vacuum pump: Removal - Refitting**) (37A, Mechanical component controls).

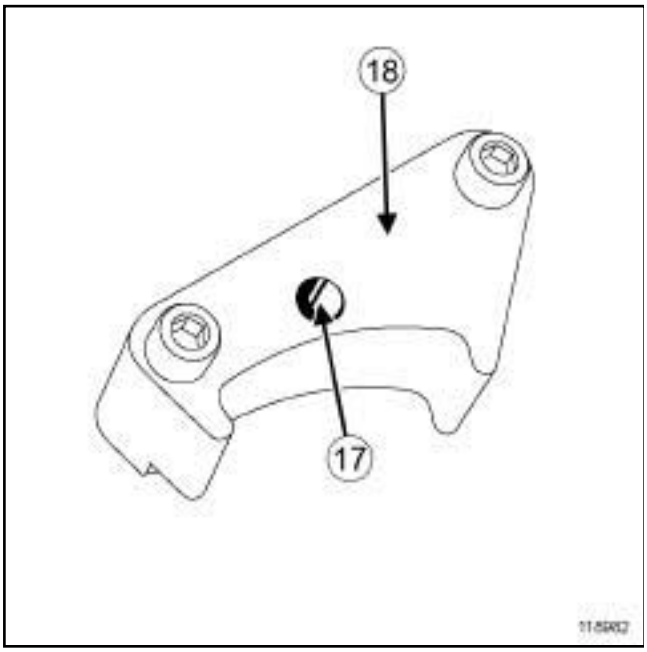

118982

❑ Increase the hole (**17**) of the **(Mot. 1606)** (**18**) using an **8.5 mm** drill bit.

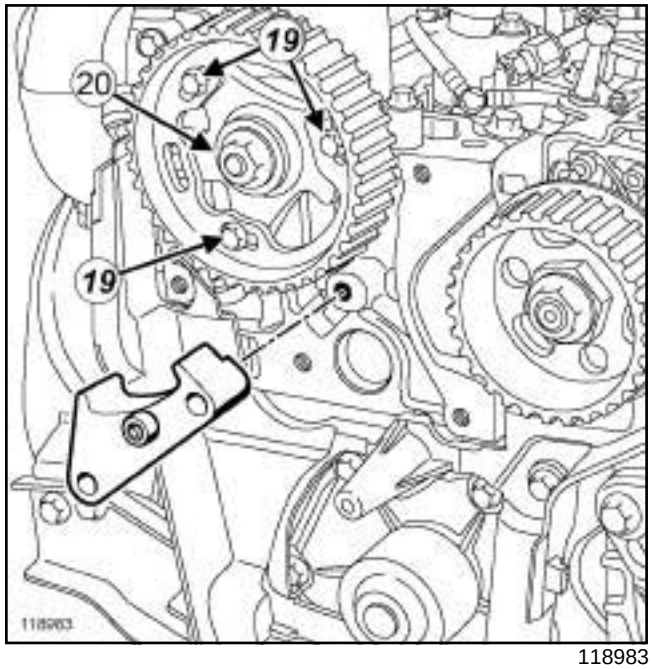

118983

❑ Undo the camshaft pulley hub bolts (**19**) .

❑ Fit the **(Mot. 1606)** on the cylinder head to lock the camshaft pulley wheel.

❑ Tighten the camshaft pulley hub bolts (**19**) .

❑ Remove:

- the nut (**20**) from the camshaft pulley,
- the **(Mot. 1606)**,
- the camshaft pulley.

K9K

II - OPERATION FOR REMOVAL OF PART CONCERNED

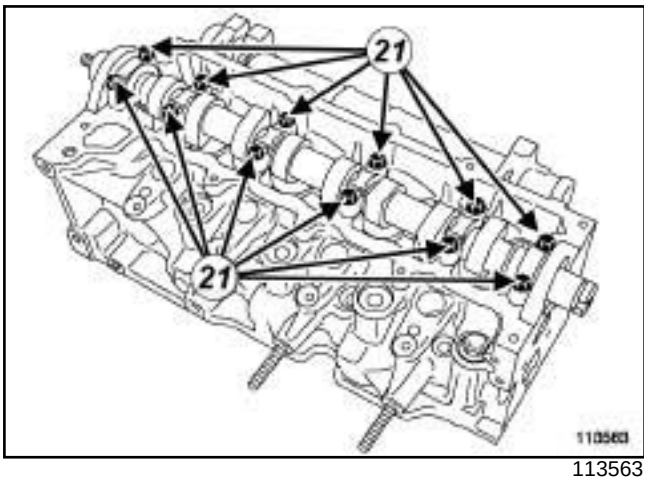

113563

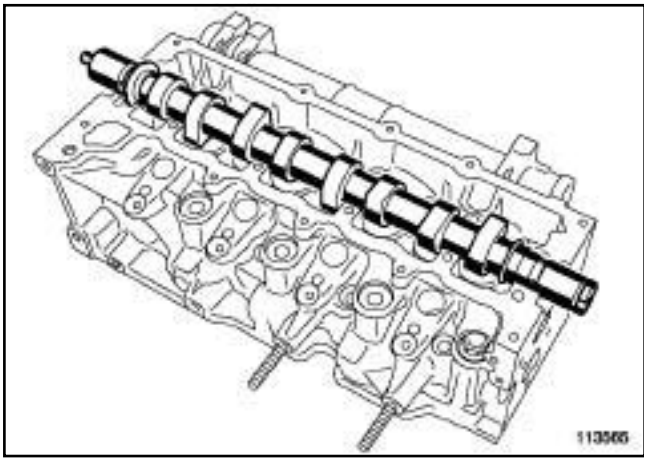
113565

- Mark the position of the camshaft bearings.
- Remove:
  - the camshaft bearings bolts (**21**) ,
  - the camshaft bearings,
  - the camshaft,
  - the timing end camshaft seal.

REFITTING

I - REFITTING PREPARATION OPERATION

- **parts always to be replaced: Rocker cover gasket (10,02,01,12)**.
- **parts always to be replaced: Camshaft seal on timing end (10,02,02,02)**.
- **parts always to be replaced: Camshaft timing sprocket nut (10,02,02,18)**.
- Using **ABRASIVE PADS** clean the load-bearing surfaces of the camshaft bearings.
- Use **SURFACE CLEANER** (see **Vehicle: Parts and ingredients for the repairwork**) to clean and degrease:
  - the bearing faces of the camshaft bearings on the cylinder head,
  - the bearing faces of the camshaft bearings on the camshaft bearings,
  - the rocker cover seal housing in the rocker cover,
  - the rocker cover joint face on the cylinder head.

WARNING
To ensure proper sealing, the gasket surfaces must be clean, dry and not greasy (avoid any finger marks).

WARNING
Applying excess sealant could cause it to be squeezed out when parts are tightened. A mixture of sealant and fluid could damage certain components (engine, radiator, etc.).

WARNING
Do not scrape the joint faces of the aluminium, any damage caused to the joint face will result in a risk of leaks.

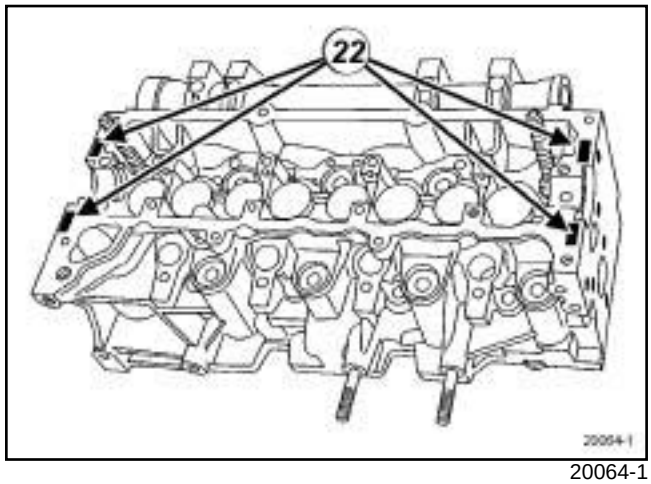

20064-1

- Apply four beads (**22**) of **RESIN ADHESIVE** (see **Vehicle: Parts and ingredients for the repairwork**) (04B, Consumables - Products) **7 mm** in diameter on the cylinder head.

II - REFITTING OPERATION FOR PART CONCERNED

- Position the camshaft by positioning the timing end camshaft groove vertically.

K9K

❏ Refit the camshaft bearings.

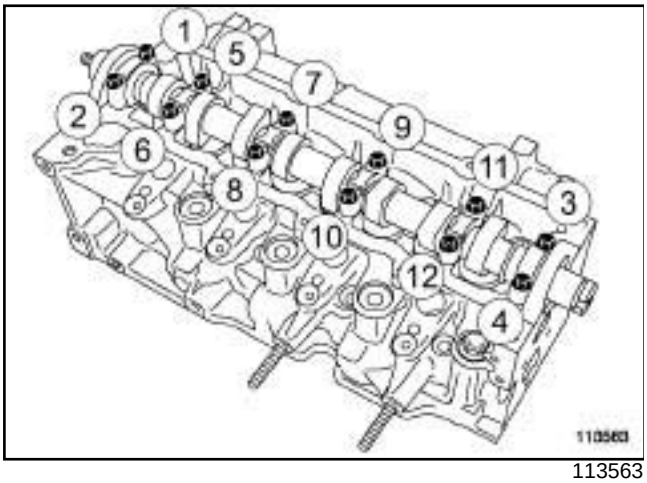

113563

❏ Refit the camshaft bearing bolts (**1**) , (**3**) , (**4**) and (**2**) in order.

❏ Tighten the camshaft bearing bolts (**1**) , (**3**) , (**4**) and (**2**) in order.

❏ Refit the camshaft bearing bolts in order.

❏ Tighten to torque and in order the **bolts of the camshaft bearings (10 N.m)**.

III - FINAL OPERATION

❏ Refit the camshaft seal (see **11A**, **Top and front of engine**, **Camshaft seal at timing end: Removal - Refitting**, page **11A-186**) .

❏ Fit the camshaft pulley.

❏ Refit a new camshaft pulley nut.

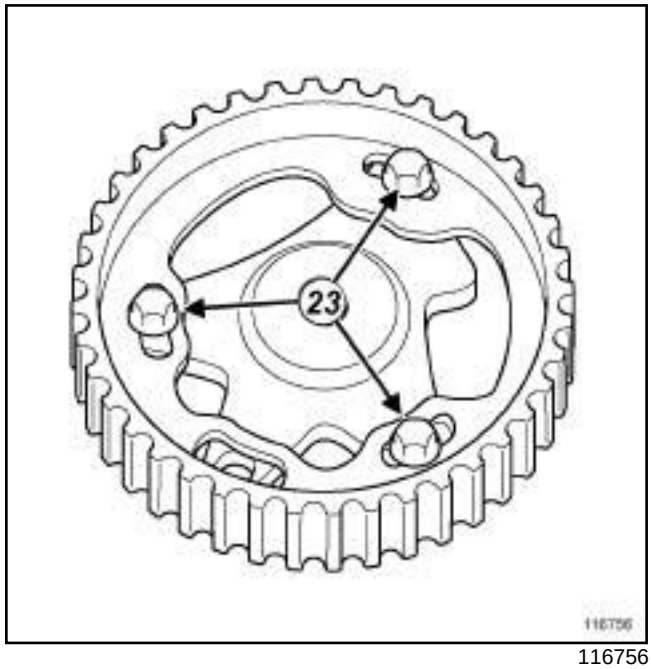

116756

❏ Undo the camshaft pulley hub bolts (**23**) .

❏ Fit the **(Mot. 1606)** on the cylinder head to lock the camshaft pulley wheel.

❏ Tighten to torque:

- the **camshaft pulley hub bolts (14 N.m)**,
- and to angle the **camshaft pulley nut (30 N.m + 86° ± 6°)**.

❏ Remove the tool **(Mot. 1606)**.

❏ Refit the vacuum pump (see **Vacuum pump: Removal - Refitting**) (37A, Mechanical component controls).

K9K

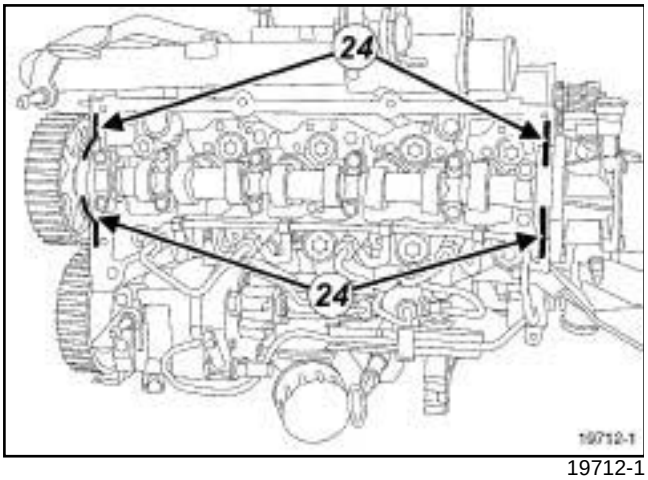

19712-1

❑

WARNING
Applying excess sealant could cause it to be squeezed out when parts are tightened. A mixture of sealant and fluid could damage certain components (engine, radiator, etc.).

❑ Place beads (**24**) of **SILICONE ADHESIVE SEALANT** (see **Vehicle: Parts and ingredients for the repairwork**) (04B, Consumables - Products) **2 mm** in diameter and **10 mm** long.

❑ Refit the rocker cover, fitted with a new gasket.

❑ Torque tighten the **rocker cover bolts (11 N.m)**.

❑ Connect the oil vapour rebreathing pipe onto the rocker cover.

❑ Clip on the rocker cover:

- the fuel return rail,
- the diesel injector wiring.

❑ Refit:

- the injector rail protector cover mounting,
- the injector rail protector cover.

❑ Clip the injector rail protector cover into place.

K9K, and 830

❑ Refit the oil vapour rebreathing valve.

❑ Connect the brake servo pipe to the vacuum pump.

❑ Refit the oil vapour rebreathing valve bracket.

❑ Fit the gearbox breather pipe mounting.

❑ Refit the nut of the gearbox breather pipe mounting.

❑ Connect the oil vapour rebreathing pipe to the oil vapour rebreathing valve.

❑ Fit the clip of the oil vapour rebreathing pipe on the oil vapour rebreathing valve.

❑ Connect the oil vapour rebreathing pipe to the air filter box air outlet pipe.

K9K, and 832

❑ Refit the damper valve (see **12A**, **Fuel mixture**, **Air inlet flap: Removal - Refitting**, page **12A-11**) .

❑ Refit:

- the turbocharger air outlet pipe (see **12B**, **Turbocharging**, **Intercooler air inlet pipe: Removal - Refitting**, page **12B-41**) ,
- the timing belt (see **11A**, **Top and front of engine**, **Timing belt: Removal - Refitting**, page **11A-29**) .

K9K, and 830

❑ Refit the camshaft position sensor (see **13B**, **Diesel injection**, **Camshaft position sensor: Removal - Refitting**, page **13B-19**) .

❑ Refit:

- the right-hand suspended engine mounting (see **19D**, **Engine mounting**, **Right-hand suspended engine mounting: Removal - Refitting**, page **19D-18**) ,
- the scoop under the scuttle panel grille (see **Scoop under scuttle panel grille: Removal - Refitting**) (56A, Exterior equipment),
- the scuttle panel grille (see **Scuttle panel grille: Removal - Refitting**) (56A, Exterior equipment),

K9K

- the windscreen wiper arms (see **Windscreen wiper arm: Removal - Refitting**) (85A, Wiping - Washing),
- the crankshaft accessories pulley (see **11A**, **Top and front of engine**, **Crankshaft accessories pulley: Removal - Refitting**, page **11A-15**) ,
- the accessories belt (see **11A**, **Top and front of engine**, **Accessories belt: Removal - Refitting**, page **11A-7**) ,
- the engine undertray,
- the front section of the front right-hand wheel arch liner (see **Front wheel arch liner: Removal - Refitting**) (55A, Exterior protection),
- the front right-hand wheel (see **Wheel: Removal - Refitting**) (35A, Wheels and tyres),
- the engine cover.

❑ Connect the battery (see **Battery : Removal - Refitting**) (80A, Battery).

F4R

REMOVAL

I - REMOVAL PREPARATION OPERATION

❑ Position the vehicle on a two-post lift (see **Vehicle: Towing and lifting**) (02A, Lifting equipment).

❑ Remove:

- the engine cover,
- the battery (see **Battery: Removal - Refitting**) (80A, Battery),
- the battery tray (see **Battery tray: Removal - Refitting**) (80A, Battery),
- the engine undertray bolts,
- the engine undertray,
- the front wheels (see **Wheel: Removal - Refitting**) (35A, Wheels and tyres),
- the front section of the front wheel arch liners (see **Front wheel arch liner: Removal - Refitting**) (55A, Exterior protection),
- the front bumper (see **Front bumper: Removal - Refitting**) (55A, Exterior protection),
- the radiator mounting cross member (see **Radiator support cross member: Removal - Refitting**) (31A, Front axle components),
- the accessories belt (see **11A**, **Top and front of engine**, **Accessories belt: Removal - Refitting**, page **11A-7**) ,
- the crankshaft accessories pulley (see **11A**, **Top and front of engine**, **Crankshaft accessories pulley: Removal - Refitting**, page **11A-15**) ,
- the lower engine tie-bar (see **19D**, **Engine mounting**, **Lower engine tie-bar: Removal - Refitting**, page **19D-33**) ,
- the windscreen wiper arms (see **Windscreen wiper arm: Removal - Refitting**) (85A, Wiping - Washing),
- the scuttle panel grille (see **Scuttle panel grille: Removal - Refitting**) (56A, Exterior equipment),
- the scoop under the scuttle panel grille (see **Scoop under scuttle panel grille: Removal - Refitting**) (56A, Exterior equipment),
- the right-hand suspended engine mounting (see **19D**, **Engine mounting**, **Right-hand suspended engine mounting: Removal - Refitting**, page **19D-18**) ,
- the timing belt (see **11A**, **Top and front of engine**, **Timing belt: Removal - Refitting**, page **11A-29**) ,
- the camshaft seals on the timing end (see **11A**, **Top and front of engine**, **Camshaft seal at timing end: Removal - Refitting**, page **11A-186**) ,
- the oil separator,
- the rocker cover (see **11A**, **Top and front of engine**, **Rocker cover: Removal - Refitting**, page **11A-88**) .

II - OPERATION FOR REMOVAL OF PART CONCERNED

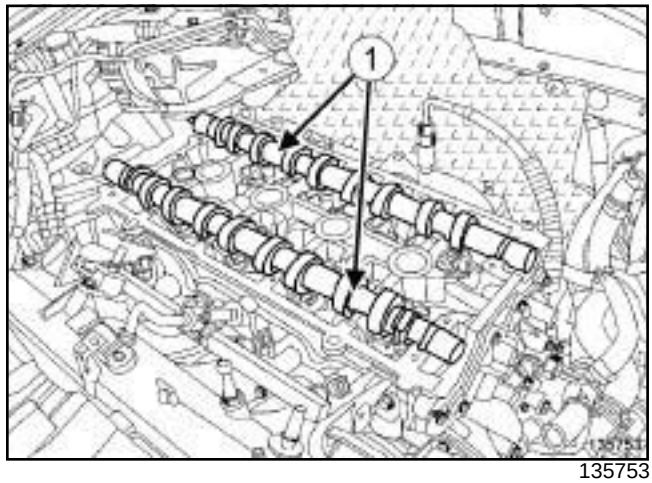

135753

❑ Remove the camshafts (**1**) .

F4R

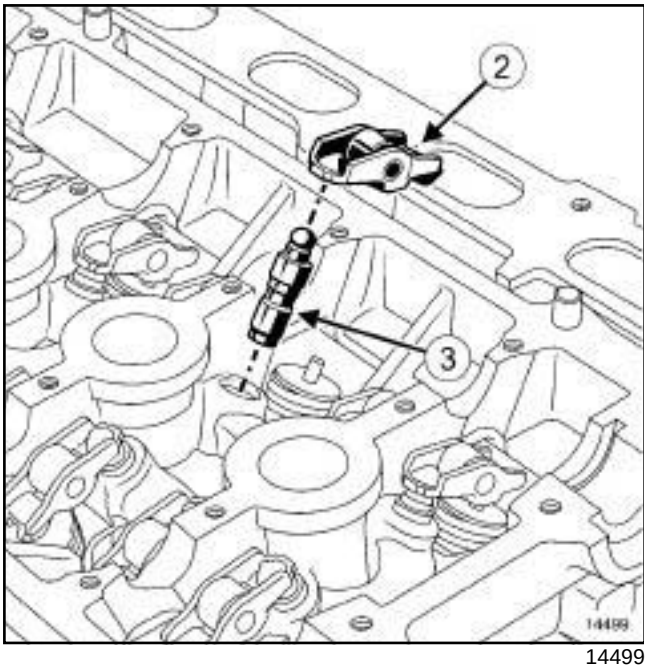

14499

❑ Remove:

- the valve rockers (**2**) ,
- the hydraulic tappets (**3**) .

Note:

To prevent any risk of unpriming the hydraulic tappets make sure that they are vertical.

F4R

REFITTING

I - REFITTING PREPARATION OPERATION

Camshaft marking

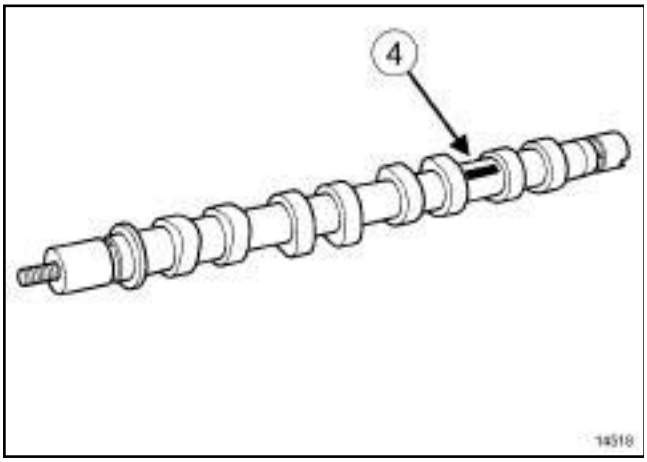

14518

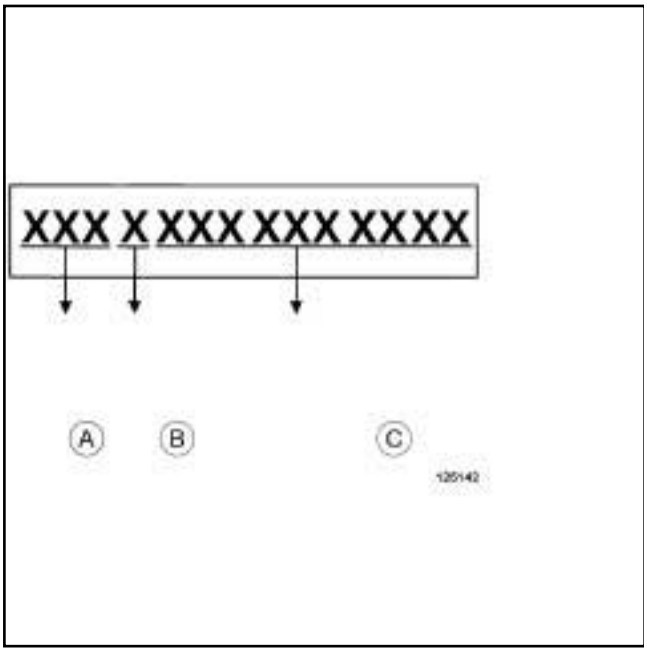

125579

❑ The camshafts can be identified by a marking at (**4**) :

- the mark (**A**) corresponds to the engine type,
- the mark (**B**) serves to distinguish the inlet camshaft from the exhaust camshaft:
- A: inlet
- E: exhaust
- the mark (**C**) is for the supplier's use only.

Note:

If the exhaust camshaft stud is loosened (see **11A**, **Top and front of engine**, **Camshaft: Removal - Refitting**, page **11A-114**) (see Technical Note 3884A, Replacing F4 camshaft pulley studs).

Note:

It is essential to reprime the hydraulic tappets as these may become drained if removed for a long time.

❑ To check if repriming is necessary, press the top of the tappet with your thumb. If the tappet piston depresses, immerse the tappets in a container full of diesel then reprime them.

II - REFITTING OPERATION FOR PART CONCERNED

❑ Refit:

- the hydraulic thrust bearings,
- the valve rockers,
- the inlet camshaft, by lubricating the inlet camshaft bearings,
- the exhaust camshaft, by lubricating the exhaust camshaft bearings.

III - FINAL OPERATION

❑ Refit:

- the rocker cover (see **11A**, **Top and front of engine**, **Rocker cover: Removal - Refitting**, page **11A-88**) ,
- the oil separator,
- new camshaft timing end seals (see **11A**, **Top and front of engine**, **Camshaft seal at timing end: Removal - Refitting**, page **11A-186**) ,
- the timing belt (see **11A**, **Top and front of engine**, **Timing belt: Removal - Refitting**, page **11A-29**) ,
- the right-hand suspended engine mounting (see **19D**, **Engine mounting**, **Right-hand suspended engine mounting: Removal - Refitting**, page **19D-18**) ,
- the scoop under the scuttle panel grille (see **Scoop under scuttle panel grille: Removal - Refitting**) (56A, Exterior equipment),

- the scuttle panel grille (see **Scuttle panel grille: Removal - Refitting**) (56A, Exterior equipment),
- the windscreen wiper arms (see **Windscreen wiper arm: Removal - Refitting**) (85A, Wiping - Washing),
- the lower engine tie-bar (see **19D**, **Engine mounting**, **Lower engine tie-bar: Removal - Refitting**, page **19D-33**) ,
- the crankshaft accessories pulley (see **11A**, **Top and front of engine**, **Crankshaft accessories pulley: Removal - Refitting**, page **11A-15**) ,
- the accessories belt (see **11A**, **Top and front of engine**, **Accessories belt: Removal - Refitting**, page **11A-7**) ,
- the radiator mounting cross member (see **Radiator support cross member: Removal - Refitting**) (31A, Front axle components),
- the front bumper (see **Front bumper: Removal - Refitting**) (55A, Exterior protection),
- the front section of the front wheel arch liners (see **Front wheel arch liner: Removal - Refitting**) (55A, Exterior protection),
- the front wheels (see **Wheel: Removal - Refitting**) (35A, Wheels and tyres),
- the engine undertray,
- the battery tray (see **Battery tray: Removal - Refitting**) (80A, Battery),
- the battery (see **Battery: Removal - Refitting**) (80A, Battery),
- the engine cover.

F9Q

Essential special tooling	
Mot. 799-01	Timing gear wheel immobiliser.

Tightening torques ▽	
bolts of the camshaft bearing cap cover	**30 N.m**
camshaft pulley bolt	**80 N.m**

REMOVAL

I - REMOVAL PREPARATION OPERATION

❑ Position the vehicle on a two-post lift (see **Vehicle: Towing and lifting**) (02A, Lifting equipment).

❑ Remove:

- the engine cover,
- the battery (see **Battery: Removal - Refitting**) (80A, Battery),
- the battery tray (see **Battery tray: Removal - Refitting**) (80A, Battery).
- the vacuum pump (see **Vacuum pump: Removal - Refitting**) (37A, Mechanical component controls),
- the engine undertray bolts,
- the engine undertray,
- the front right-hand wheel (see **Wheel: Removal - Refitting**) (35A, Wheels and tyres),
- the front right-hand wheel arch liner (see **Front wheel arch liner: Removal - Refitting**) (55A, Exterior protection),
- the accessories belt (see **11A**, **Top and front of engine**, **Accessories belt: Removal - Refitting**, page **11A-7**) ,
- the crankshaft accessories pulley (see **11A**, **Top and front of engine**, **Crankshaft accessories pulley: Removal - Refitting**, page **11A-15**) ,
- the engine tie-bar (see **19D**, **Engine mounting**, **Lower engine tie-bar: Removal - Refitting**, page **19D-33**) ,
- the windscreen wiper arms (see **Windscreen wiper arm: Removal - Refitting**) (85A, Wiping - Washing),
- the scuttle panel grille (see **Scuttle panel grille: Removal - Refitting**) (56A, Exterior equipment),
- the scoop under the scuttle panel grille (see **Scoop under scuttle panel grille: Removal - Refitting**) (56A, Exterior equipment),
- the camshaft position sensor (see **13B**, **Diesel injection**, **Camshaft position sensor: Removal - Refitting**, page **13B-19**) ,
- the right-hand suspended engine mounting (see **19D**, **Engine mounting**, **Right-hand suspended engine mounting: Removal - Refitting**, page **19D-18**) ,
- the timing belt (see **11A**, **Top and front of engine**, **Timing belt: Removal - Refitting**, page **11A-29**) ,
- the high pressure pipe between the pump and the rail (see **13B**, **Diesel injection**, **High-pressure pipe between the pump and rail: Removal - Refitting**, page **13B-71**) ,
- the high pressure pump (see **13B**, **Diesel injection**, **High pressure pump: Removal - Refitting**, page **13B-30**) .

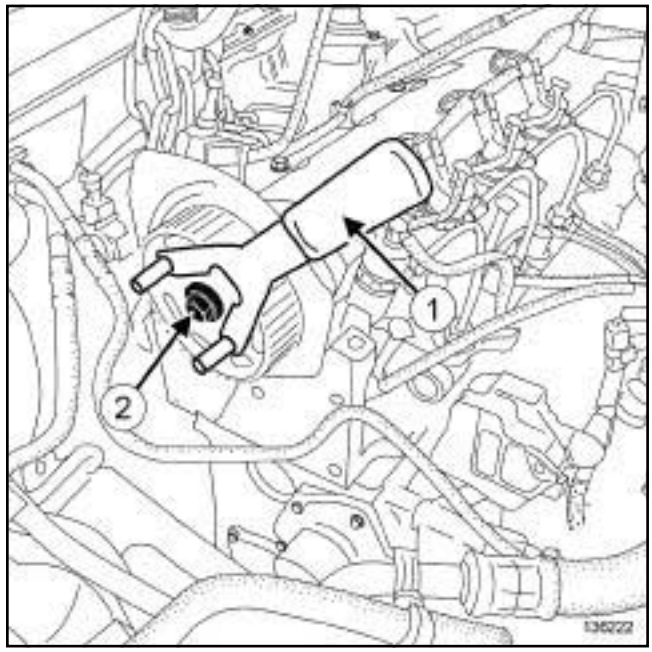

136222

❑ Lock the camshaft pulley using the **(Mot. 799-01)** (**1**) .

❑ Remove:

- the bolt (**2**) from the camshaft pulley,
- the camshaft pulley.

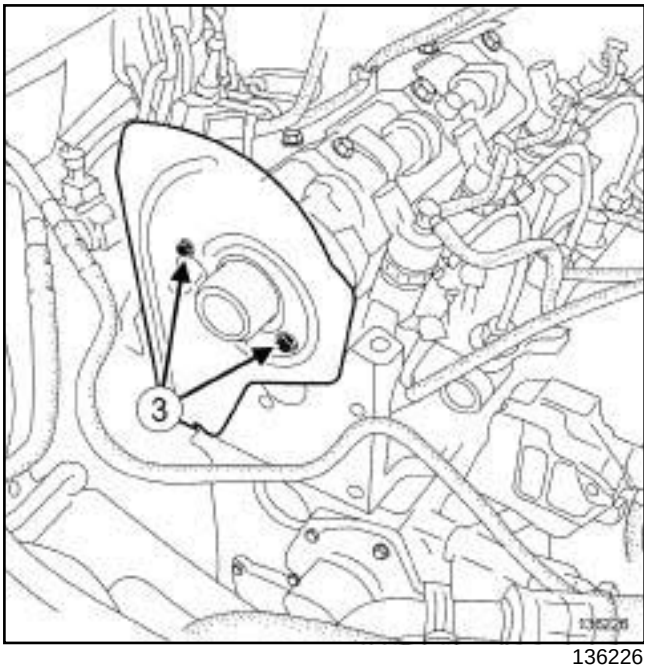

136226

❑ Remove:

- the inner timing cover bolts (**3**) ,
- the inner timing cover,
- the rocker cover (see **11A**, **Top and front of engine**, **Rocker cover: Removal - Refitting**, page **11A-88**) .

II - OPERATION FOR REMOVAL OF PART CONCERNED

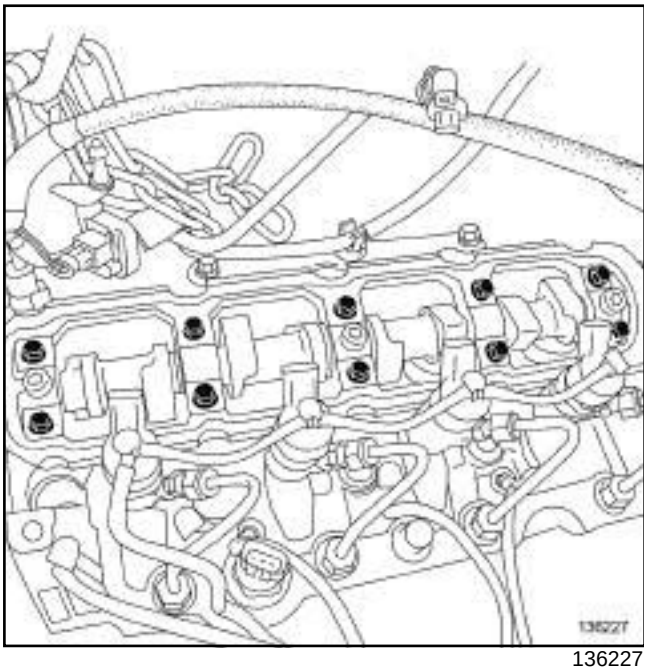
136227

❑ Remove:

- the bolts of the camshaft bearing cap cover,
- the camshaft bearing cap cover,

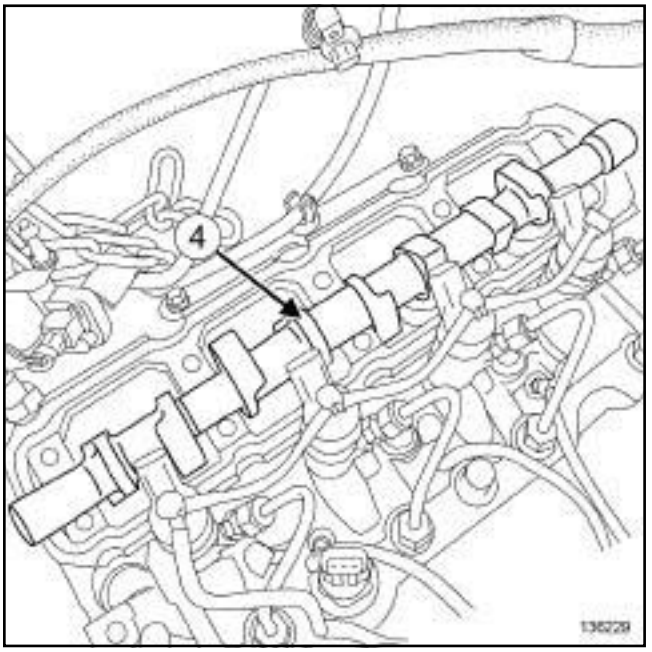

136229

❑ Remove:

- the camshaft (**4**) ,
- the camshaft seal on the timing end.

REFITTING

I - REFITTING PREPARATION OPERATION

❑

> **WARNING**
> Do not scrape the joint faces of the aluminium, any damage caused to the joint face will result in a risk of leaks.

> **WARNING**
> To ensure proper sealing, the gasket surfaces must be clean, dry and not greasy (avoid any finger marks).

❑ Use **SUPER CLEANING AGENT FOR JOINT FACES** (see **Vehicle: Parts and ingredients for the repairwork**) (04B, Consumables - Products) to clean:

- the joint face of the camshaft bearing cap cover,
- the cylinder head joint face.

❑ Use **SURFACE CLEANER** (see **Vehicle: Parts and ingredients for the repairwork**) (04B, Consumables - Products) to degrease:

- the joint face of the camshaft bearing cap cover,

- the cylinder head joint face.

❑ **parts always to be replaced: Camshaft seal on timing end (10,02,02,02)**.

parts always to be replaced: Camshaft timing sprocket bolt (10,02,02,16).

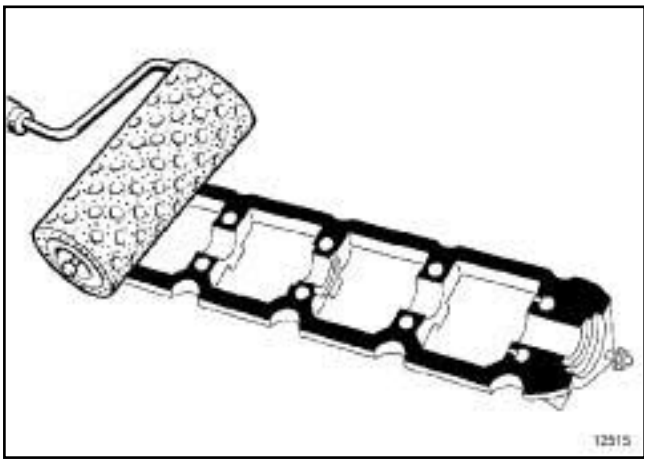

12515

❑

WARNING
Applying excess sealant could cause it to be squeezed out when parts are tightened. A mixture of sealant and fluid could damage certain components (engine, radiator, etc.).

❑ Apply **RESIN ADHESIVE** (see **Vehicle: Parts and ingredients for the repairwork**) (04B, Consumables - Products) using a stipple roller on the joint face of the camshaft bearing cap cover until the joint face is completely coated.

❑ Use a cloth to remove any **RESIN ADHESIVE** in the camshaft bearing caps.

II - REFITTING OPERATION FOR PART CONCERNED

❑ Refit the camshaft.

❑ Apply a drop of **FRENETANCHE** (see **Vehicle: Parts and ingredients for the repairwork**) (04B, Consumables - Products) on the bolts of the camshaft bearing cap cover.

❑ Refit the camshaft bearing cap cover.

❑ Torque tighten the **bolts of the camshaft bearing cap cover (30 N.m)**.

III - FINAL OPERATION

❑ Refit:

- the rocker cover (see **11A**, **Top and front of engine**, **Rocker cover: Removal - Refitting**, page **11A-88**) ,
- a new camshaft seal on the timing end (see **11A**, **Top and front of engine**, **Camshaft seal at timing end: Removal - Refitting**, page **11A-186**) ,
- the inner timing cover,
- the camshaft pulley.

❑ Lock the camshaft pulley using the **(Mot. 799-01)**.

❑ Torque tighten the **camshaft pulley bolt (80 N.m)**.

❑ Refit:

- the high pressure pump (see **13B**, **Diesel injection**, **High pressure pump: Removal - Refitting**, page **13B-30**) ,
- the high pressure pipe between the pump and the rail (see **13B**, **Diesel injection**, **High-pressure pipe between the pump and rail: Removal - Refitting**, page **13B-71**) ,
- the timing belt (see **11A**, **Top and front of engine**, **Timing belt: Removal - Refitting**, page **11A-29**) ,
- the right-hand suspended engine mounting (see **19D**, **Engine mounting**, **Right-hand suspended engine mounting: Removal - Refitting**, page **19D-18**) ,
- the camshaft position sensor (see **13B**, **Diesel injection**, **Camshaft position sensor: Removal - Refitting**, page **13B-19**) ,
- the scoop under the scuttle panel grille (see **Scoop under scuttle panel grille: Removal - Refitting**) (56A, Exterior equipment),
- the scuttle panel grille (see **Scuttle panel grille: Removal - Refitting**) (56A, Exterior equipment),
- the windscreen wiper arms (see **Windscreen wiper arm: Removal - Refitting**) (85A, Wiping - Washing),
- the engine tie-bar (see **19D**, **Engine mounting**, **Lower engine tie-bar: Removal - Refitting**, page **19D-33**) ,
- the crankshaft accessories pulley (see **11A**, **Top and front of engine**, **Crankshaft accessories pulley: Removal - Refitting**, page **11A-15**) ,
- the accessories belt (see **11A**, **Top and front of engine**, **Accessories belt: Removal - Refitting**, page **11A-7**) ,

F9Q

- the front right-hand wheel arch liner (see **Front wheel arch liner: Removal - Refitting**) (55A, Exterior protection),
- the front right-hand wheel (see **Wheel: Removal - Refitting**) (35A, Wheels and tyres),
- the engine undertray,
- the vacuum pump (see **Vacuum pump: Removal - Refitting**) (37A, Mechanical component controls),
- the battery tray (see **Battery tray: Removal - Refitting**) (80A, Battery),
- the battery (see **Battery : Removal - Refitting**) (80A, Battery),
- the engine cover.

K9K

Essential special tooling	
Mot. 1448	Long nose pliers for hose clips.
Mot. 1390	Support for removing/refitting the engine - gearbox assembly.
Mot. 1453	Multiple-adjusting engine mounting support with retaining straps.
Mot. 1453-01	Additional winder nut on engine lift support Mot. 1453.

Essential equipment
safety strap(s)
cylinder head rule
set of feeler gauges

Tightening torques ▽	
new cylinder head bolts (initial torque)	**20 Nm**
new cylinder head bolts	**25 N.m**
new cylinder head bolts	**270° ± 10°**
alternator lower bolt	**25 N.m**
alternator upper bolt	**25 N.m**
air filter unit air outlet pipe clip on the turbocharger	**5.5 N.m**
rocker cover bolts	**11 N.m**

IMPORTANT

To avoid all risk of damage to the systems, apply the safety and cleanliness instructions and operation recommendations before carrying out any repair (see **13B**, **Diesel injection**, **Diesel injection: Precautions for repair**, page **13B-1**) .

IMPORTANT

Wear leaktight gloves (Nitrile type) for this operation.

IMPORTANT

Use the diagnostic tool before any operation is carried out on the injection circuit to check:

- that the rail is not under pressure,

- that the fuel temperature is not too high.

Working on the circuit with the engine running is strictly forbidden.

WARNING

To prevent impurities from entering the circuit, place protective plugs on all fuel circuit components exposed to the open air.

REMOVAL

I - REMOVAL PREPARATION OPERATION

❑ Position the vehicle on a two-post lift (see **Vehicle: Towing and lifting**) (02A, Lifting equipment).

❑ Disconnect the battery (see **Battery: Removal - Refitting**) (80A, Battery).

❑ Remove:

- the engine cover,

- the front wheels (see **Wheel: Removal - Refitting**) (35A, Wheels and tyres),

- the front section of the front wheel arch liners (see **Front wheel arch liner: Removal - Refitting**) (55A, Exterior protection),

- the engine undertray bolts,

- the engine undertray,

- the front bumper (see **Front bumper: Removal - Refitting**) (55A, Exterior protection),

- the catalytic converter (see **19B**, **Exhaust**, **Catalytic converter: Removal - Refitting**, page **19B-17**) ,

- the turbocharger oil return pipe (see **12B**, **Turbocharging**, **Turbocharger oil pipe: Removal - Refitting**, page **12B-22**) ,

- the accessories belt (see **11A**, **Top and front of engine**, **Accessories belt: Removal - Refitting**, page **11A-7**) ,

- the crankshaft accessories pulley (see **11A**, **Top and front of engine**, **Crankshaft accessories pulley: Removal - Refitting**, page **11A-15**) ,

K9K

- the windscreen wiper arms (see **Windscreen wiper arm: Removal - Refitting**) (85A, Wiping - Washing),
- the scuttle panel grille (see **Scuttle panel grille: Removal - Refitting**) (56A, Exterior equipment),
- the scoop under the scuttle panel grille (see **Scoop under scuttle panel grille: Removal - Refitting**) (56A, Exterior equipment),
- the right-hand suspended engine mounting (see **19D**, **Engine mounting**, **Right-hand suspended engine mounting: Removal - Refitting**, page **19D-18**) .

K9K, and 830

❑ Remove the camshaft position sensor (see **13B**, **Diesel injection**, **Camshaft position sensor: Removal - Refitting**, page **13B-19**) .

❑ Remove:

- the timing belt (see **11A**, **Top and front of engine**, **Timing belt: Removal - Refitting**, page **11A-29**) ,
- the turbocharger air outlet pipe (see **12B**, **Turbocharging**, **Intercooler air inlet pipe: Removal - Refitting**, page **12B-41**) ,
- the intercooler air outlet pipe (see **12B**, **Turbocharging**, **Intercooler air outlet pipe: Removal - Refitting**, page **12B-56**) .

K9K, and 832

❑ Remove the damper valve (see **12A**, **Fuel mixture**, **Air inlet flap: Removal - Refitting**, page **12A-11**) .

K9K

K9K, and 830

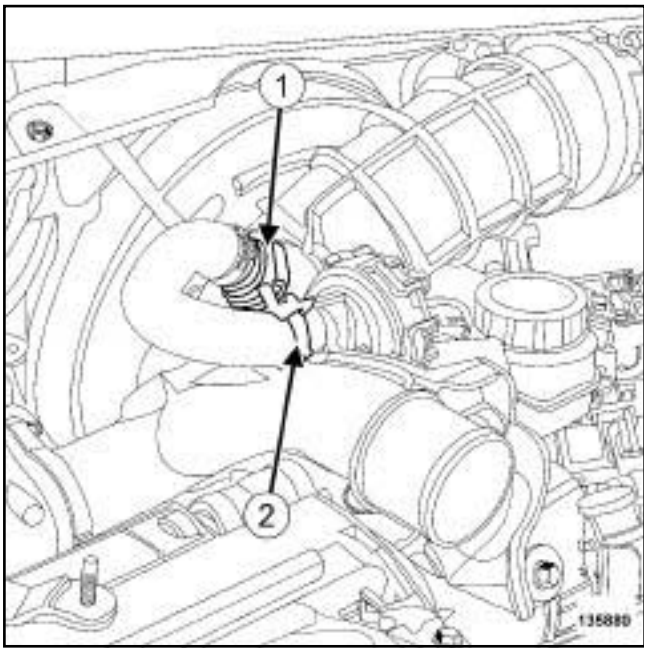

135880

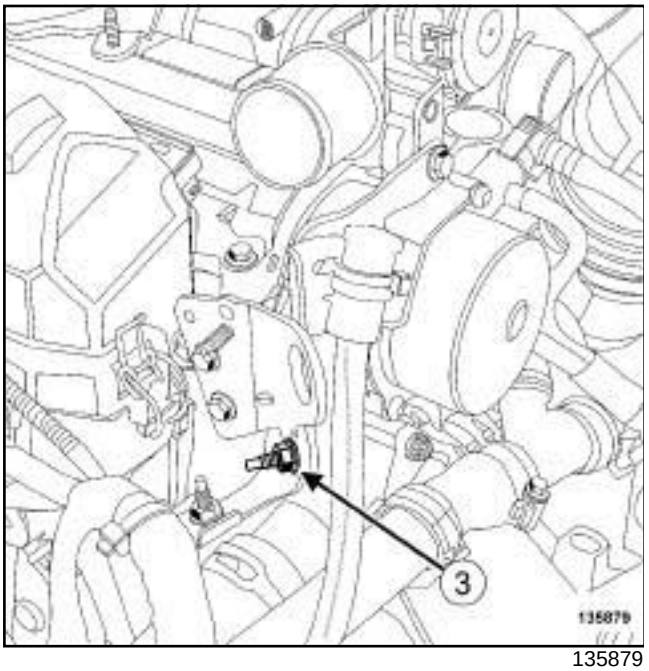

135879

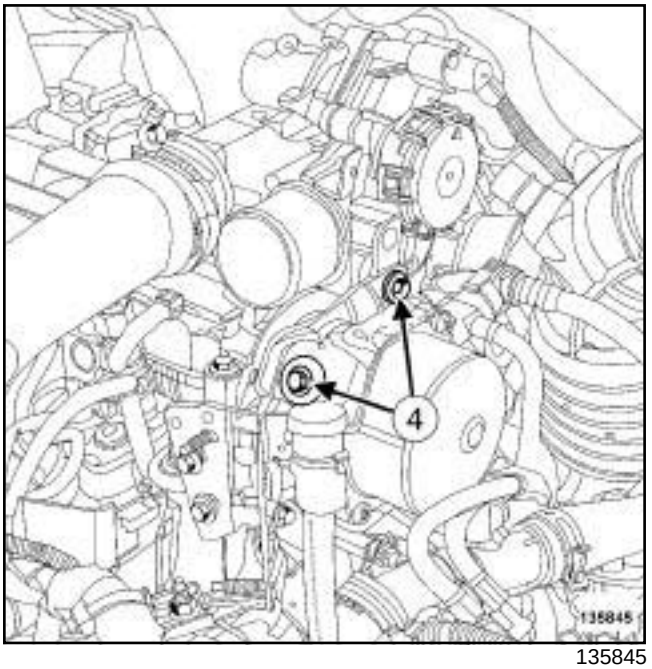

135845

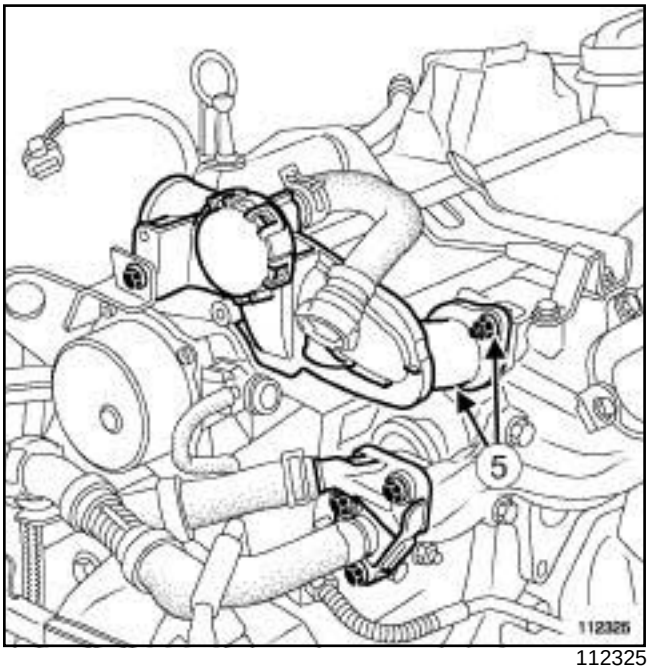

112325

- ❑ Disconnect the oil vapour rebreathing pipe union from the air filter unit air outlet pipe at (**1**) .
- ❑ Separate the oil vapour rebreathing pipe clip (**2**) from the oil vapour rebreathing valve.
- ❑ Disconnect the oil vapour rebreathing pipe from the oil vapour rebreathing valve.
- ❑ Remove the nut (**3**) from the gearbox breather pipe support.
- ❑ Separate the gearbox breather pipe support.
- ❑ Remove:

  - the bracket bolts (**4**) of the oil vapour rebreathing

K9K

valve,

- the bracket of the oil vapour rebreathing valve.

❏ Disconnect the brake servo pipe union from the vacuum pump.

❏ Remove:

- the nuts (**5**) of the oil vapour rebreathing valve,
- the oil vapour rebreathing valve,
- the seal of the oil vapour rebreathing valve.

K9K, and 832

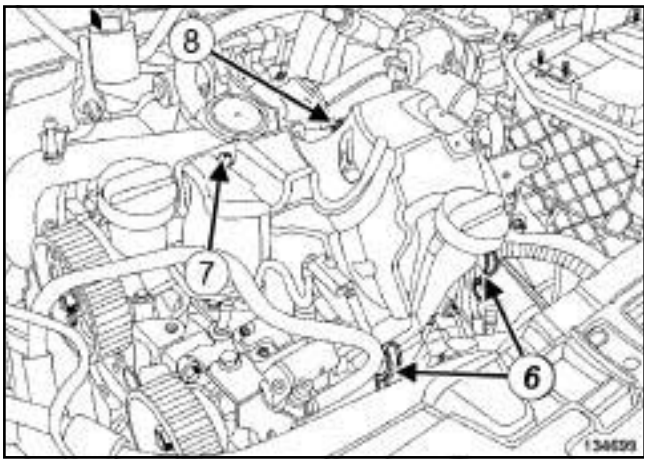

134699

❏ Unclip the injector rail protector cover at (**6**) .

❏ Remove:

- the injector rail protector cover bolt (**7**) ,
- the injector rail protector cover nut (**8**) ,
- the injector rail protector cover.

K9K, and 830

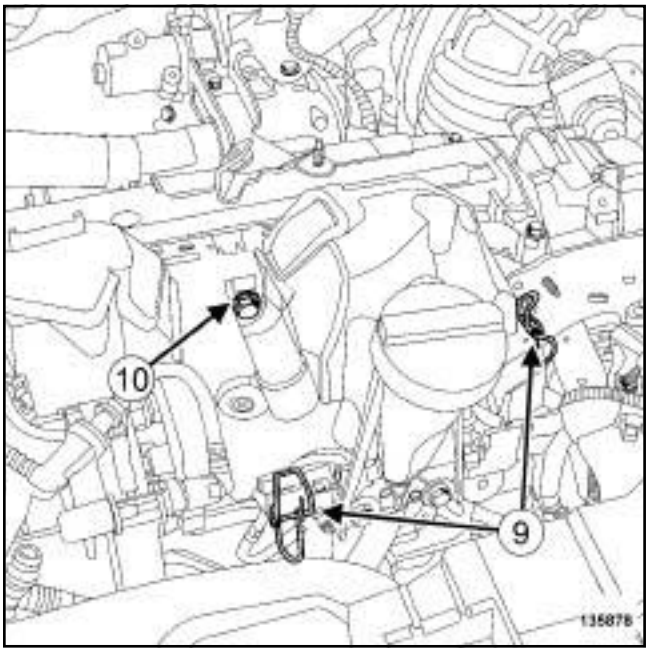

135878

❏ Unclip the injector rail protector cover at (**9**) .

❏ Remove:

- the injector rail protector cover bolt (**10**) ,
- the injector rail protector cover.

K9K

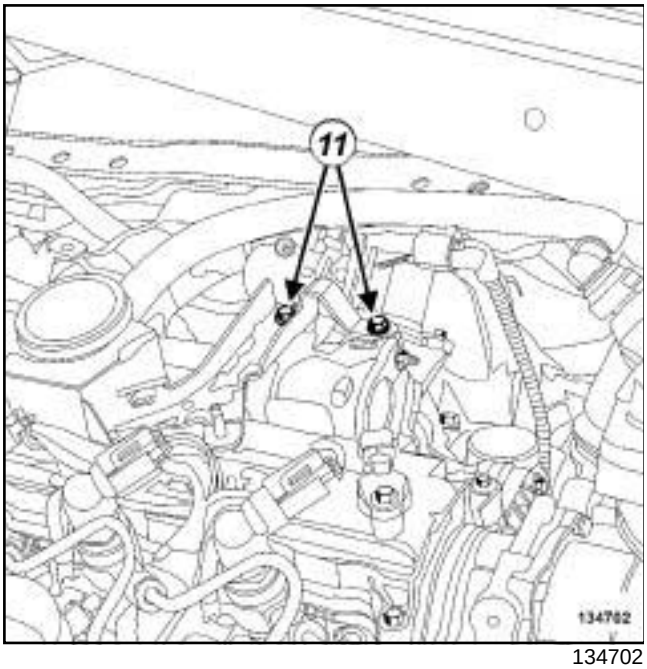

134702

❑ Remove:

- the bolts (**11**) of the injector rail protector cover support,
- the injector rail protector cover support.

K9K, and 832

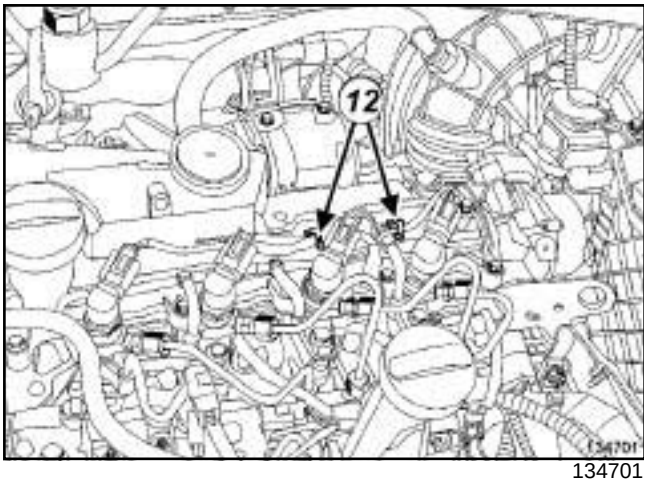

134701

❑ Unclip the diesel injector wiring from the rocker cover at (**12**) .

K9K, and 832

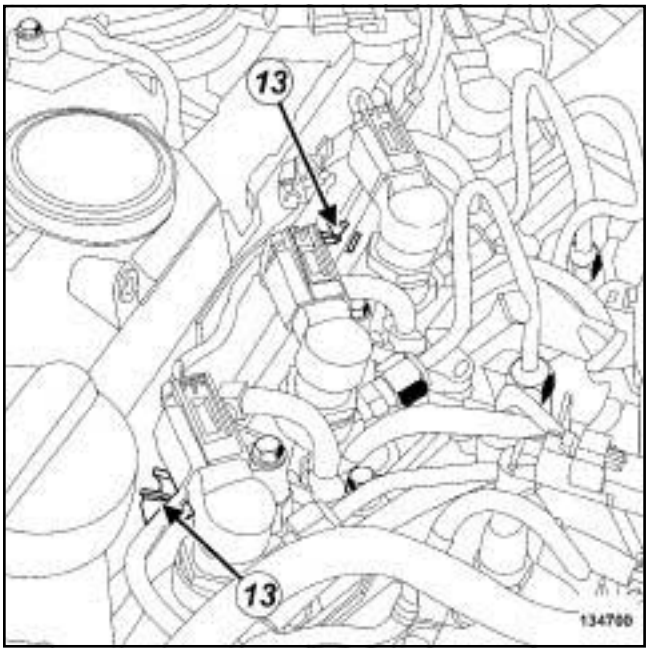

134700

❑ Unclip the diesel injector fuel return rail from the rocker cover at (**13**) .

K9K, and 830

❑ Remove the fuel return rail (see **13B**, **Diesel injection**, **Diesel injector fuel return rail: Removal - Refitting**, page **13B-63**) .

K9K, and 832

❑ Disconnect the oil vapour rebreathing pipe from the rocker cover.

K9K

K9K, and 832

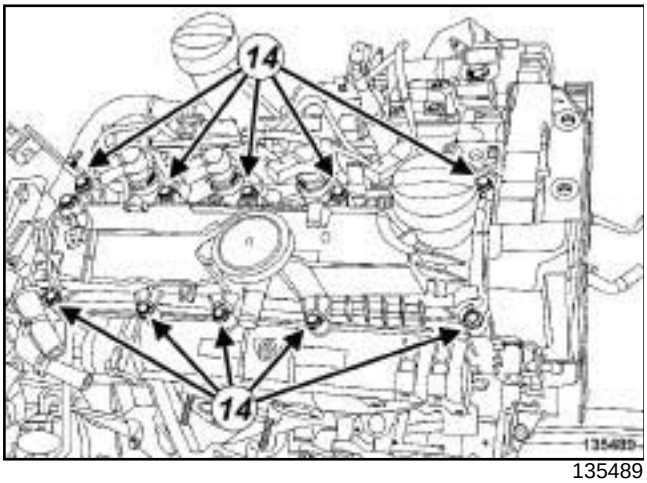

135489

❏ Remove:

- the rocker cover bolts (**14**) ,
- the rocker cover.

K9K, and 830

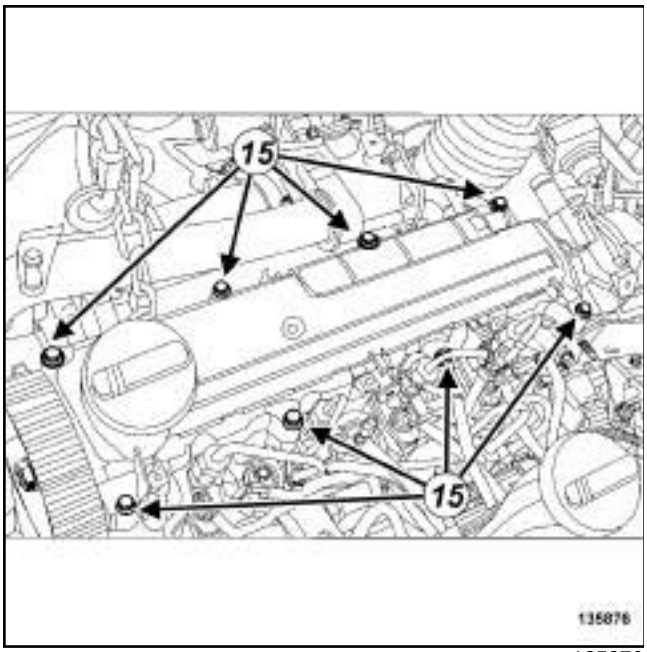

135876

❏ Remove:

- the rocker cover bolts (**15**) ,
- the rocker cover.

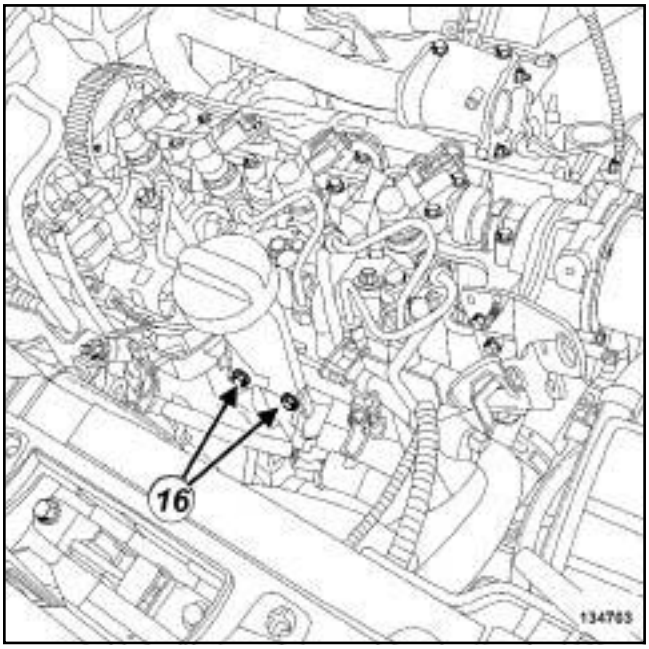

134703

❏ Remove:

- the dipstick,
- the dipstick guide bolts (**16**) .

❏ Move aside the dipstick guide.

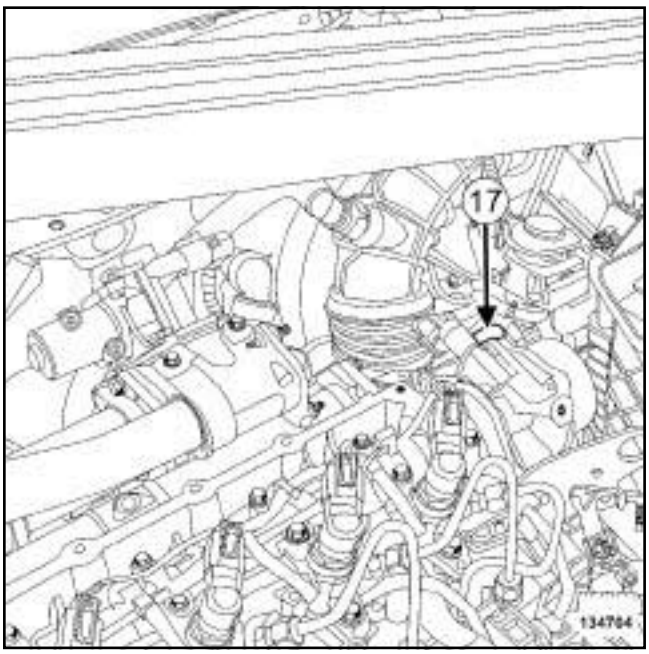

134704

❏ Disconnect the vacuum pipe (**17**) of the turbocharging pressure regulation solenoid valve from the vacuum pump.

❏ Unclip the hose of the turbocharging pressure regulator solenoid valve from the cylinder head.

K9K

K9K, and 832

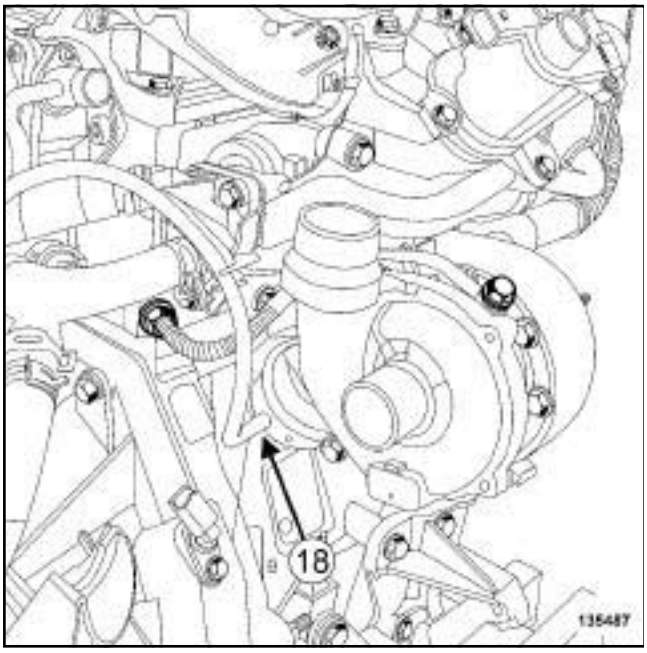

135487

❑ Disconnect the hose (**18**) of the turbocharging pressure regulator solenoid valve from the turbocharger.

K9K, and 830

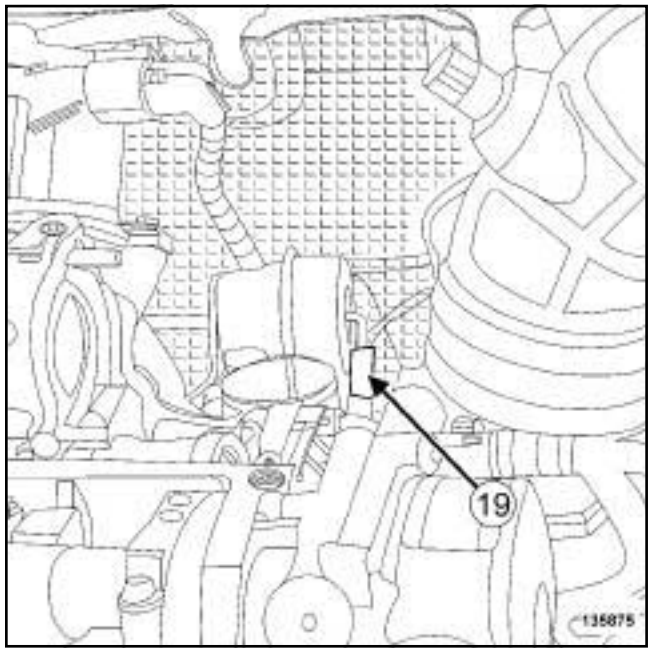

135875

❑ Disconnect the hose (**19**) of the turbocharging pressure regulator solenoid valve from the turbocharger.

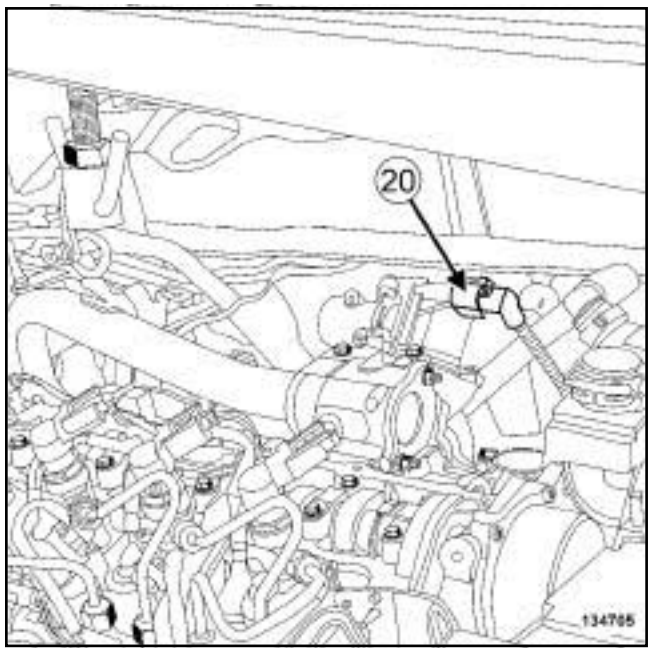

134705

❑ Disconnect the connector (**20**) from the exhaust gas recirculation solenoid valve.

K9K

K9K, and 832

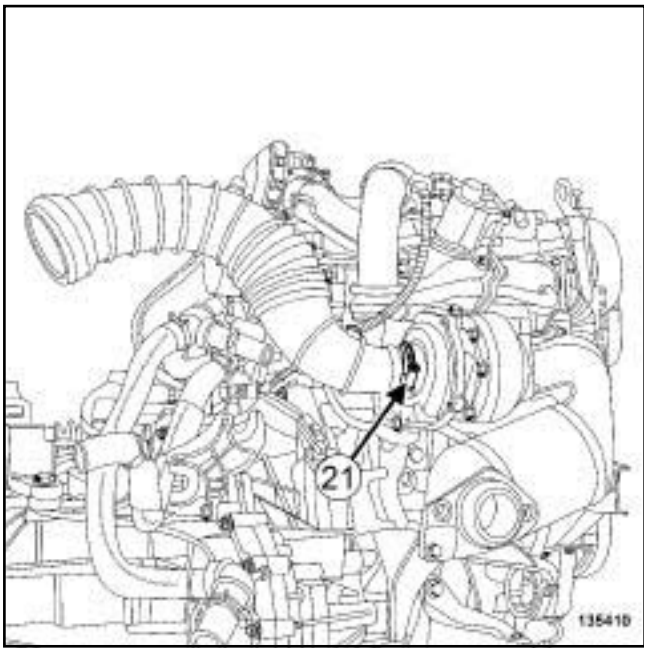

135410

❑ Undo the air filter unit air outlet pipe clip (**21**) from the turbocharger.

K9K, and 830

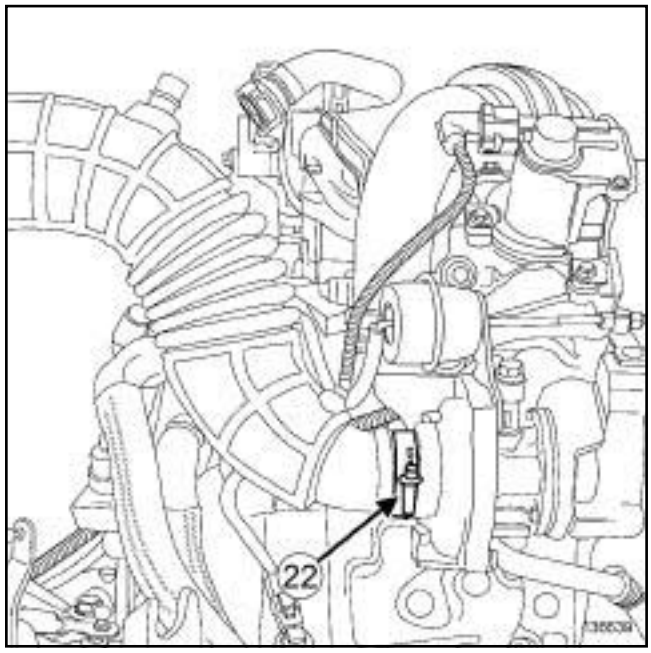

136639

❑ Undo the air filter unit air outlet pipe clip (**22**) from the turbocharger.

❑ Disconnect the air filter unit air outlet pipe from the turbocharger.

❑ Drain the cooling system (see **19A**, **Cooling**, **Cooling circuit: Draining - Refilling**, page **19A-17**) .

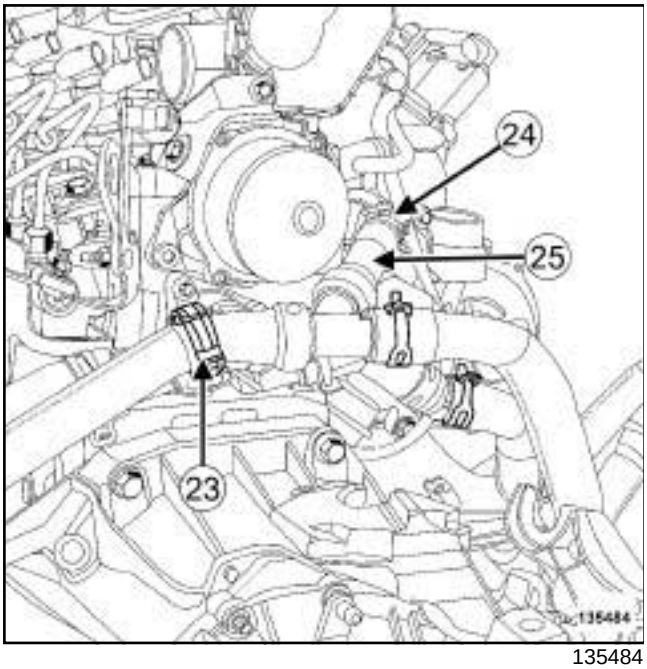

135484

- Unclip the heater matrix cooling hose from the water chamber (**23**) .
- Separate the heater matrix cooling hose clip (**24**) from the exhaust cooler cover using the tool **(Mot. 1448)**.
- Disconnect the heater matrix cooling hose from the exhaust gas cooler cover (**25**) .

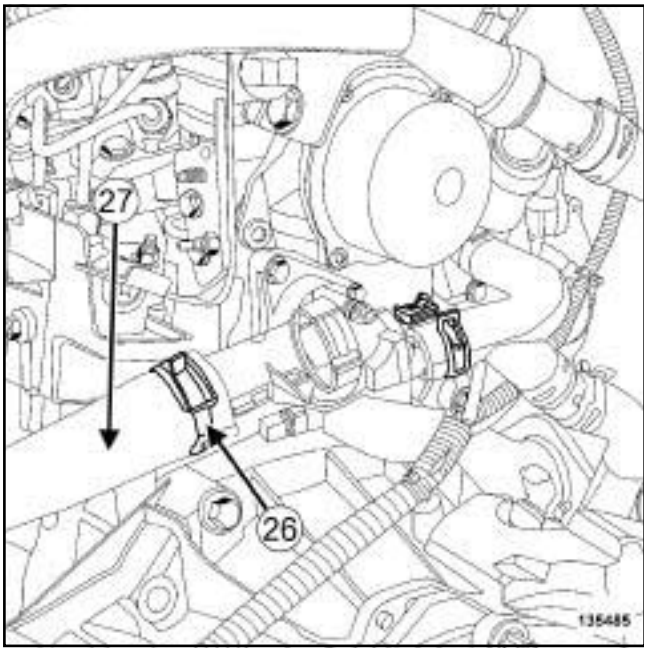

135485

- Use the tool **(Mot. 1448)** to separate the clip (**26**) of the cooling radiator top hose (**27**) from the water chamber.
- Disconnect the cooling radiator top cooling hose from the water chamber (**27**) .

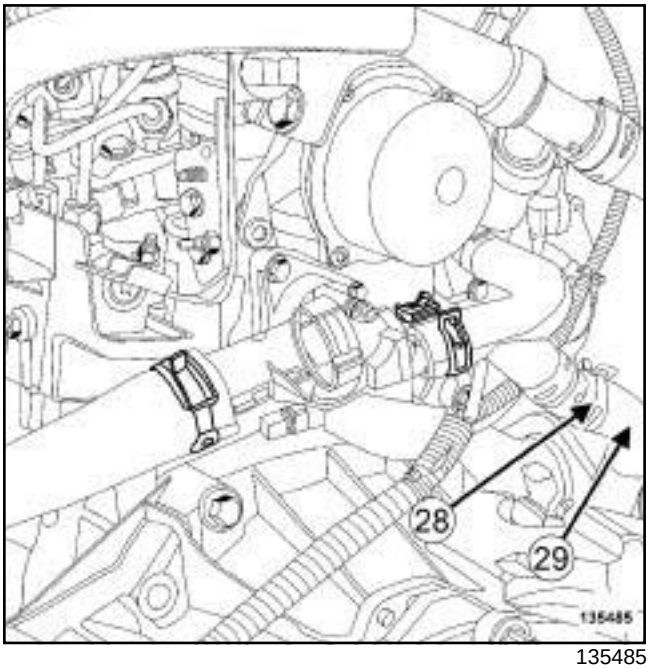

135485

- Separate the heater matrix cooling hose clip (**28**) from the water chamber cooling hose using the tool **(Mot. 1448)**.
- Disconnect the heater matrix cooling hose from the water chamber cooling hose (**29**) .
- Disconnect the coolant temperature sensor connector.

K9K

K9K, and 832

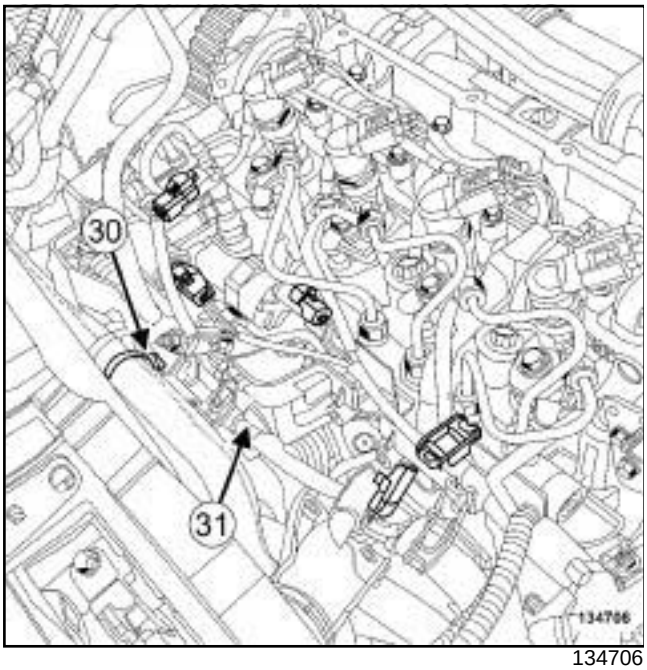

134706

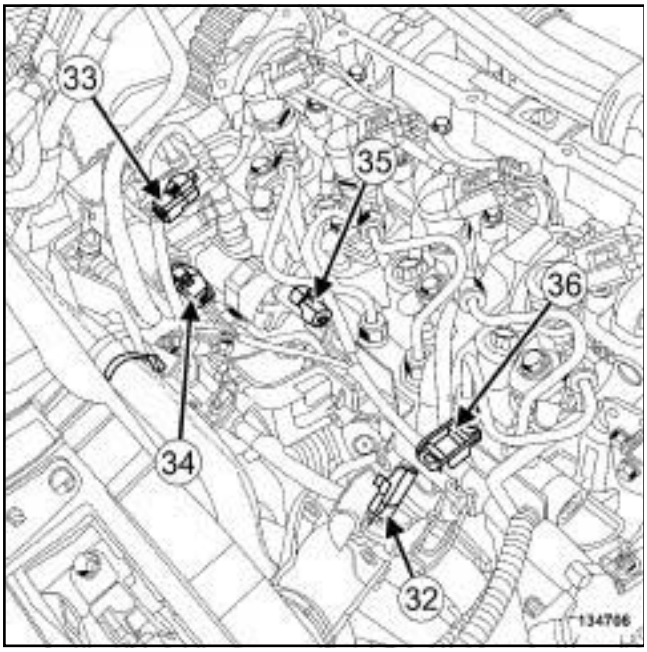

134706

❑ Unclip:

- the expansion bottle bottom cooling hose from the high pressure pump protector (**30**) ,
- the alternator wiring from the injector rail protector at (**31**) .

❑ Disconnect:

- the connector (**32**) from the injector rail pressure sensor,
- the fuel temperature sensor connector (**33**) ,
- the connector (**34**) from the fuel pressure regulation solenoid valve,
- the connector (**35**) from the fuel flow regulation solenoid valve,
- all heater plug connectors,
- the connector for each diesel injector.

❑ Unclip the injection wiring clip (**36**) .

K9K, and 830

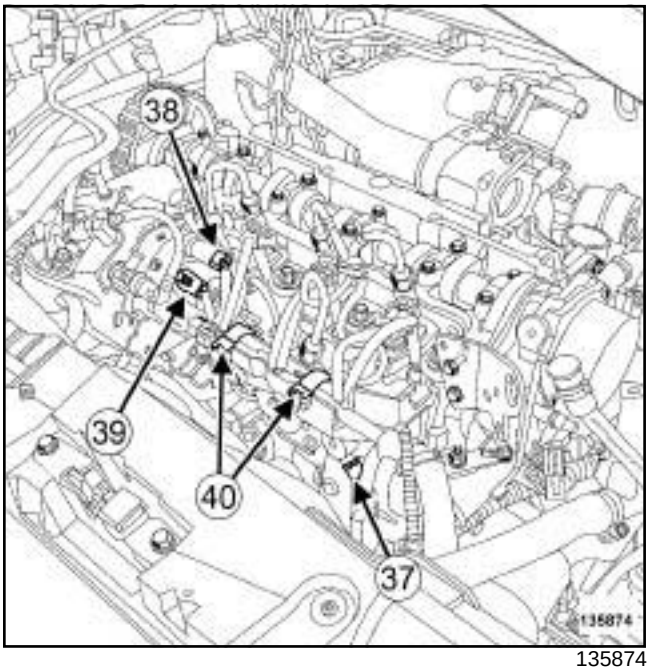

135874

❑ Disconnect:

- the connector (**37**) from the injector rail pressure sensor,
- the fuel temperature sensor connector (**38**) ,
- the connector (**39**) from the fuel flow regulation solenoid valve,
- all heater plug connectors,
- the connector for each diesel injector.

❑ Unclip the clips (**40**) of the injection wiring.

❑ Separate the injection wiring.

K9K

K9K, and 832

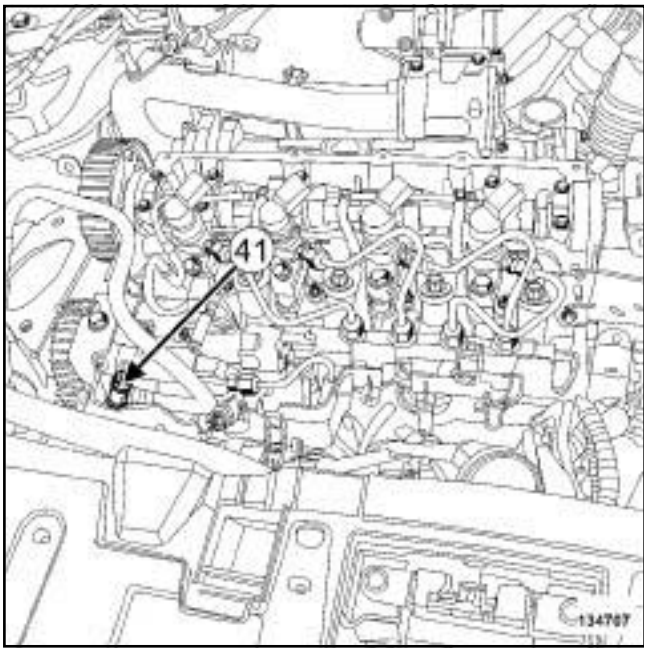

134707

❑ Disconnect the fuel supply pipe union (**41**) from the high pressure pump.

K9K

K9K, and 830

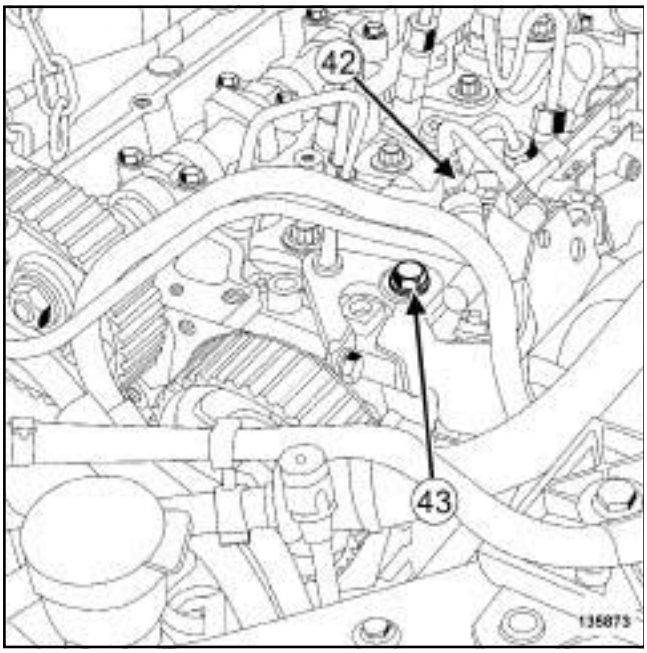

135873

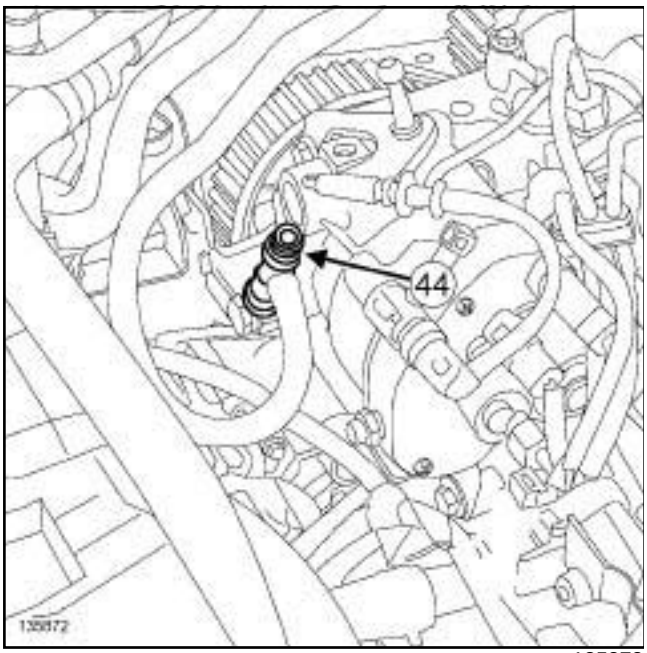

135872

❑ Unclip the high pressure pump fuel return union from the high pressure pump protector at (**42**) .

❑ Remove:

- the bolt (**43**) of the high pressure pump protector,
- the high pressure pump protector.

❑ Disconnect the fuel supply pipe (**44**) from the high pressure pump.

❑ Fit a suitable blanking plug on:

- the fuel supply pipe union opening,
- the high pressure pump opening.

K9K, and 832

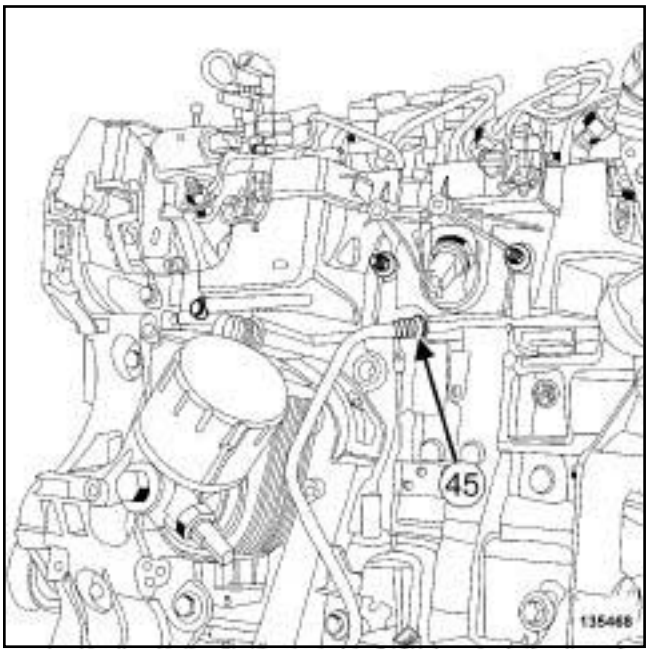

135468

❑ Disconnect the fuel drain pipe from the injector rail protector (**45**) .

K9K

K9K, and 832

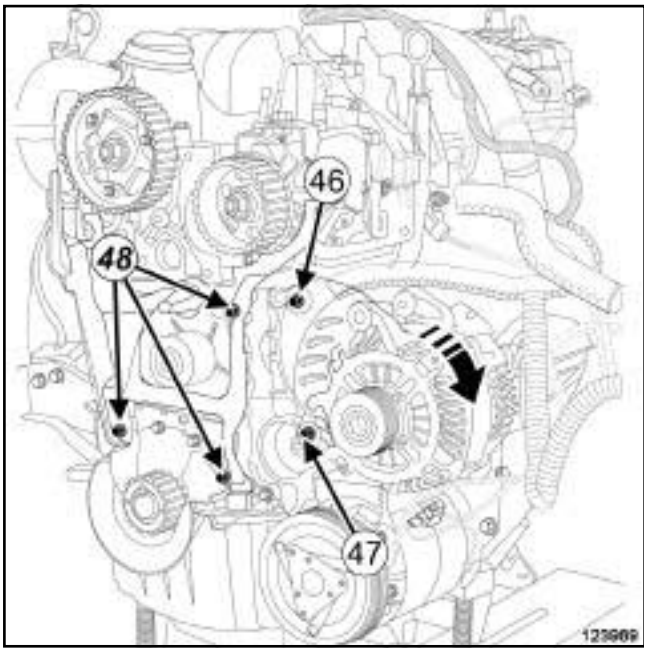

123969

- ❑ Remove the alternator upper bolt (**46**) .
- ❑ Loosen the alternator lower bolt (**47**) .
- ❑ Tilt the alternator slightly towards the front of the vehicle.
- ❑ Remove:
  - the bolts (**48**) of the inner cover,
  - the inner cover.

K9K, and 830

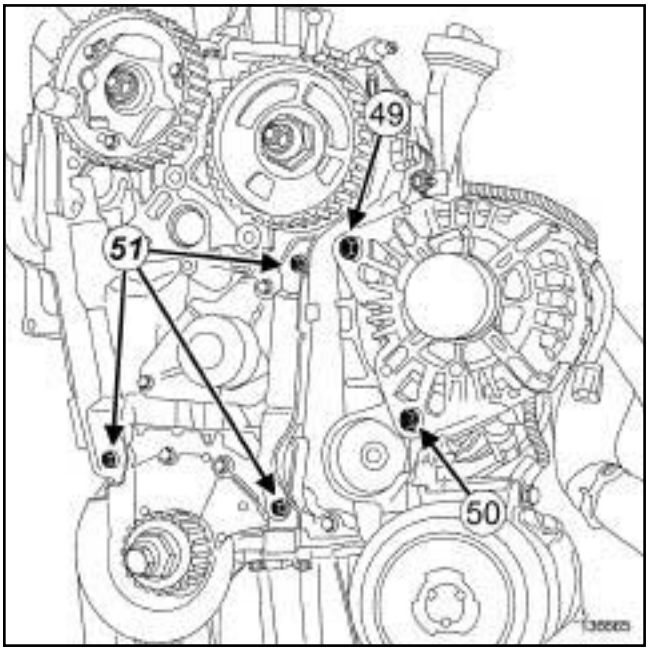

136665

- ❑ Remove the alternator upper bolt (**49**) .
- ❑ Loosen the alternator lower bolt (**50**) .
- ❑ Tilt the alternator slightly towards the front of the vehicle.
- ❑ Remove:
  - the bolts (**51**) of the inner cover,
  - the inner cover.

- ❑ Fit the tool **(Mot. 1390)** under the vehicle.
- ❑ Remove:
  - the **safety strap(s)**,
  - the **(Mot. 1453)** fitted with the **(Mot. 1453-01)**.

II - OPERATION FOR REMOVAL OF PART CONCERNED

❑

> Note:
>
> The operation to remove the cylinder head requires two people.

K9K

K9K, and 832

❑

Note:

Turn the camshaft slightly to facilitate the removal of the cylinder head bolt on the camshaft position sensor target.

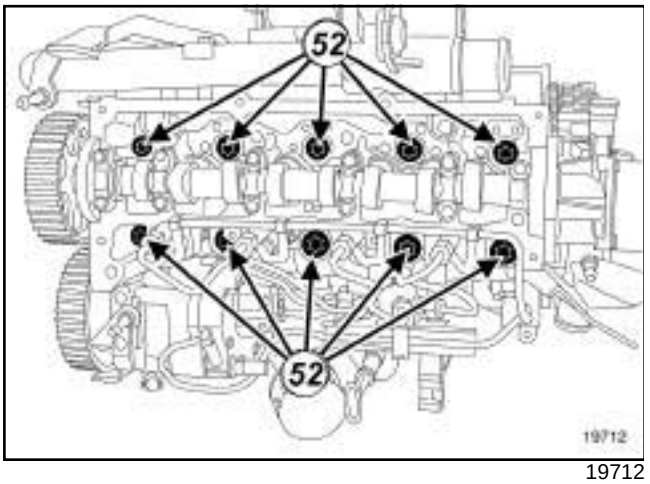

19712

❑ Remove:

- the cylinder head bolts (**52**) ,
- the cylinder head from the cylinder block,
- the cylinder head gasket.

REFITTING

I - REFITTING PREPARATION OPERATION

❑

IMPORTANT

Wear goggles with side protectors for this operation.

IMPORTANT

Wear leaktight gloves (Nitrile type) for this operation.

WARNING

Do not scrape the joint faces of the aluminium, any damage caused to the joint face will result in a risk of leaks.

WARNING

Do not allow this product to drip onto the paintwork.

Clean the cylinder head carefully to avoid any foreign bodies entering the oil return and supply pipes.

Failure to follow this advice could lead to the blocking of the various oil inlet galleries, which would quickly result in engine damage.

WARNING

To ensure proper sealing, the gasket surfaces must be clean, dry and not greasy (avoid any finger marks).

❑ **parts always to be replaced: Cylinder head bolts (10,02,01,14)**.

❑ **parts always to be replaced: Cylinder head gasket (10,02,01,04)**.

❑ **parts always to be replaced: Rocker cover gasket (10,02,01,12)**.

K9K, and 830

❑ Always replace the seal of the oil vapour rebreathing valve.

K9K

1 - Cleaning the cylinder head joint face

❏

> **WARNING**
> Protect the oilway so that foreign bodies do not enter the oil pipes in the cylinder head.
>
> Failure to follow this instruction could lead to the blocking of the oilways, resulting in a rapid deterioration of the camshaft.

❏ Clean the joint face using **ABRASIVE PADS** :

- of the cylinder head,
- of the cylinder block.

❏ Use a **SURFACE CLEANER** (see **Vehicle: Parts and ingredients for the repairwork**) (04B, Consumables - Products) and **CLEAN CLOTHS** to degrease the joint faces:

- of the cylinder head,
- of the cylinder block,
- of the exhaust gas cooler mounting on the gearbox side,
- of the oil vapour rebreathing valve.

2 - Checking the gasket face

❏ Check with a **cylinder head rule** and a **set of feeler gauges** to determine if the joint face has been deformed.

> **WARNING**
> No regrinding of the cylinder head is permitted.

❏ The maximum deformation is **0.05 mm**.

> Note:
>
> If the cylinder head is faulty:
>
> -strip down the cylinder head (see **Stripping the cylinder head**) (Technical Note 6006A, 10A, Engine and cylinder block assembly),
>
> -test the cylinder head for possible cracks using the cylinder head test kit,
>
> -rebuild the cylinder head (see **Stripping the cylinder head**) (Technical Note 6006A, 10A, Engine and cylinder block assembly).

3 - Cleaning the joint face of the rocker cover

❏

> **WARNING**
> Do not scrape the joint faces of the aluminium, any damage caused to the joint face will result in a risk of leaks.

> **WARNING**
> To ensure proper sealing, the gasket surfaces must be clean, dry and not greasy (avoid any finger marks).

❏ Clean the cylinder head joint face using **ABRASIVE PADS**.

❏ Use **SURFACE CLEANER** (see **Vehicle: Parts and ingredients for the repairwork**) (04B, Consumables - Products) and **CLEAN CLOTHS** to degrease:

- the cylinder head joint face,
- the rocker cover housing.

II - REFITTING OPERATION FOR PART CONCERNED

❏ Bring the pistons to mid-stroke position to prevent any risk of contact with the valves when tightening the cylinder head.

> Note:
>
> The operation to refit the cylinder head requires two people.

> Note:
>
> The cylinder head gasket has a foolproofing device which must be positioned on the cylinder block inlet side.

K9K

❑ Fit:

- a new cylinder head gasket, centred by two dowels,
- the cylinder head on the cylinder block.

WARNING
In order to ensure that the bolts are correctly tightened, use a syringe to remove any oil which may be in the cylinder head mounting holes.

WARNING
Do not oil the new bolts. Be sure to oil bolts being reused.

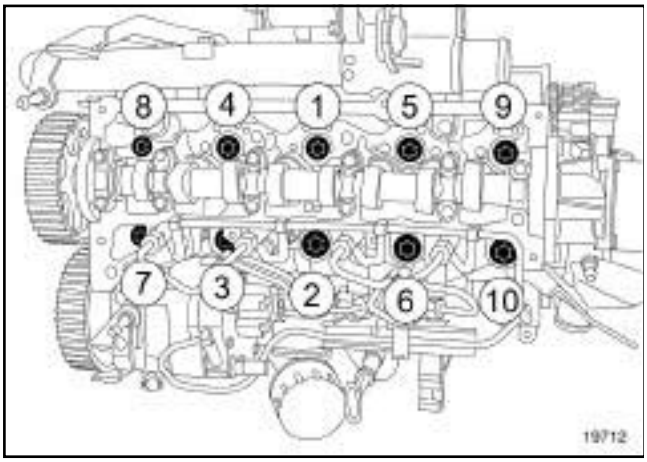

19712

❑ Refit in order the new cylinder head bolts.

❑ Pretighten to torque and in order the **new cylinder head bolts (initial torque) (20 Nm)**.

❑ Tighten to torque and in order the **new cylinder head bolts (25 N.m)**.

❑ Check that all of the new cylinder head mounting bolts are tightened to the correct torque **(25 N.m)**.

❑ Angle tighten in order the **new cylinder head bolts (270° ± 10°)**.

III - FINAL OPERATION

❑ Fit the **(Mot. 1453)** fitted with the **(Mot. 1453-01)**.

❑ Remove the tool **(Mot. 1390)**.

❑ Refit the inner cover.

❑ Fit the alternator in place.

❑ Refit the alternator upper bolt.

❑ Tighten to torque:

- the **alternator lower bolt (25 N.m)**,
- the **alternator upper bolt (25 N.m)**.

K9K, and 832

❑ Connect the fuel drain pipe on the injector rail protector.

❑ Remove the blanking plug

- on the high pressure pump opening,
- on the fuel supply pipe union opening.

❑ Connect the fuel supply pipe to the high pressure pump.

K9K, and 830

❑ Refit the high pressure pump protector.

❑ Clip the high pressure pump fuel return union onto the high pressure pump protector.

❑ Fit the injection wiring.

K9K, and 832

❑ Clip on the injection wiring clip.

❑ Connect:

- the connector for each diesel injector,
- all heater plug connectors,
- the fuel flow regulation solenoid valve connector,
- the fuel pressure regulation solenoid valve connector,
- the fuel temperature sensor connector,
- the injector rail pressure sensor connector.

❑ Clip:

- the alternator wiring onto the injector rail protector,
- the expansion bottle bottom cooling hose onto the high pressure pump protector.

K9K, and 830

❑ Clip on the injection wiring clips.

❑ Connect:

- the connector for each diesel injector,

K9K

- all heater plug connectors,
- the fuel flow regulation solenoid valve connector,
- the fuel temperature sensor connector,
- the injector rail pressure sensor connector.

❑ Connect:

- the coolant temperature sensor connector,
- the heater matrix cooling hose to the water chamber cooling hose.

❑ Fit the heater matrix cooling hose clip onto the water chamber cooling hose using the tool **(Mot. 1448)**.

❑ Connect the cooling radiator top cooling hose to the water chamber.

❑ Fit the cooling radiator top cooling hose clip to the water chamber.

❑ Connect the heater matrix cooling hose to the exhaust gas cooler cover.

❑ Fit the heater matrix cooling hose clip on the exhaust gas cooler cover using the tool **(Mot. 1448)**.

❑ Clip the heater matrix cooling hose onto the water chamber.

❑ Fill and bleed the cooling system (see **19A**, **Cooling**, **Cooling circuit: Draining - Refilling**, page **19A-17**) .

❑ Connect the air filter unit air outlet pipe to the turbocharger.

❑ Torque tighten the **air filter unit air outlet pipe clip on the turbocharger (5.5 N.m)**.

❑ Connect:

- exhaust gas recirculation solenoid valve connector ,
- the turbocharging pressure regulation solenoid valve hose.

❑ Clip on the turbocharging pressure regulation solenoid valve hose.

❑ Connect the turbocharging pressure regulation solenoid valve hose to the vacuum pump.

❑ Fit the dipstick guide.

❑ Refit:

- the dipstick guide bolts,
- the dipstick.

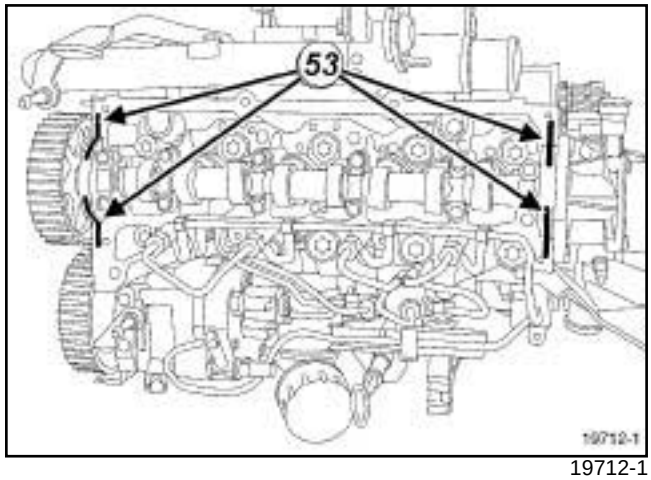

19712-1

❑

WARNING
Applying excess sealant could cause it to be squeezed out when parts are tightened. A mixture of sealant and fluid could damage certain components (engine, radiator, etc.).

❑ Place beads (**53**) of **SILICONE ADHESIVE SEALANT** (see **Vehicle: Parts and ingredients for the repairwork**) (04B, Consumables - Products) **2 mm** in diameter and **10 mm** long.

❑ Refit the rocker cover, fitted with a new gasket.

❑ Torque tighten the **rocker cover bolts (11 N.m)**.

K9K, and 832

❑ Connect the oil vapour rebreathing pipe onto the rocker cover.

K9K, and 830

❑ Refit the diesel injector fuel return rail (see **13B**, **Diesel injection**, **Diesel injector fuel return rail: Removal - Refitting**, page **13B-63**) .

K9K, and 832

❑ Clip on the rocker cover:

- the diesel injector fuel return rail,
- the diesel injector wiring.

K9K

❏ Refit:

- the support of the injector rail protector cover,
- the injector rail protector cover.

❏ Clip on the injector rail protector cover.

K9K, and 830

❏ Refit:

- the oil vapour rebreathing valve seal on oil vapour rebreathing valve,
- the oil vapour rebreathing valve.

❏ Connect the brake servo pipe union to the vacuum pump.

❏ Refit the bracket of the oil vapour rebreathing valve.

❏ Fit the breather support onto the gearbox.

❏ Refit the breather support nut on the gearbox.

❏ Connect the oil vapour rebreathing pipe on the oil vapour rebreathing valve.

❏ Fit the oil vapour rebreathing pipe clip on the oil vapour rebreathing valve.

❏ Connect the oil vapour rebreathing pipe union to the air filter unit air outlet pipe.

K9K, and 832

❏ Refit the damper valve (see **12A**, **Fuel mixture**, **Air inlet flap: Removal - Refitting**, page **12A-11**) .

❏ Refit:

- the intercooler air outlet pipe (see **12B**, **Turbocharging**, **Intercooler air outlet pipe: Removal - Refitting**, page **12B-56**) ,
- the turbocharger air outlet pipe (see **12B**, **Turbocharging**, **Intercooler air inlet pipe: Removal - Refitting**, page **12B-41**) ,
- the timing belt (see **11A**, **Top and front of engine**, **Timing belt: Removal - Refitting**, page **11A-29**) .

K9K, and 830

❏ Refit the camshaft position sensor (see **13B**, **Diesel injection**, **Camshaft position sensor: Removal - Refitting**, page **13B-19**) .

❏ Refit:

- the right-hand suspended engine mounting (see **19D**, **Engine mounting**, **Right-hand suspended engine mounting: Removal - Refitting**, page **19D-18**) ,
- the scoop under the scuttle panel grille (see **Scoop under scuttle panel grille: Removal - Refitting**) (56A, Exterior equipment),
- the scuttle panel grille (see **Scuttle panel grille: Removal - Refitting**) (56A, Exterior equipment),
- the windscreen wiper arms (see **Windscreen wiper arm: Removal - Refitting**) (85A, Wiping - Washing),
- the accessories belt (see **11A**, **Top and front of engine**, **Accessories belt: Removal - Refitting**, page **11A-7**) ,
- the turbocharger oil return pipe (see **12B**, **Turbocharging**, **Turbocharger oil pipe: Removal - Refitting**, page **12B-22**) ,
- the catalytic converter (see **19B**, **Exhaust**, **Catalytic converter: Removal - Refitting**, page **19B-17**) ,
- the front bumper (see **Front bumper: Removal - Refitting**) (55A, Exterior protection),
- the engine undertray,
- the front section of the front wheel arch liners (see **Front wheel arch liner: Removal - Refitting**) (55A, Exterior protection),
- the front wheels (see **Wheel: Removal - Refitting**) (35A, Wheels and tyres),
- the engine cover.

❏ Connect the battery (see **Battery : Removal - Refitting**) (80A, Battery).

F4R

Essential special tooling	
Mot. 1448	Long nose pliers for hose clips.

Tightening torques ▽	
cylinder head bolts	**30 N.m**
cylinder head bolts	**180° ± 25°**

IMPORTANT
Wear protective gloves during the operation.

REMOVAL

I - REMOVAL PREPARATION OPERATION

❑ Position the vehicle on a two-post lift (see **Vehicle: Towing and lifting**) (02A, Lifting equipment).

❑ Remove:

- the engine cover,
- the battery (see **Battery: Removal - Refitting**) (80A, Battery),
- the battery tray (see **Battery tray: Removal - Refitting**) (80A, Battery),
- the engine undertray bolts,
- the engine undertray,
- the front wheels (see **Wheel: Removal - Refitting**) (35A, Wheels and tyres),
- the front section of the front wheel arch liners (see **Front wheel arch liner: Removal - Refitting**) (55A, Exterior protection),
- the front bumper (see **Front bumper: Removal - Refitting**) (55A, Exterior protection),
- the radiator mounting cross member (see **Radiator support cross member: Removal - Refitting**) (31A, Front axle components),
- the windscreen wiper arms (see **Windscreen wiper arm: Removal - Refitting**) (85A, Wiping - Washing),
- the scuttle panel grille (see **Scuttle panel grille: Removal - Refitting**) (56A, Exterior equipment),
- the scoop under the scuttle panel grille (see **Scoop under scuttle panel grille: Removal - Refitting**) (56A, Exterior equipment).

❑ Drain the cooling system (see **19A**, **Cooling**, **Cooling circuit: Draining - Refilling**, page **19A-17**) .

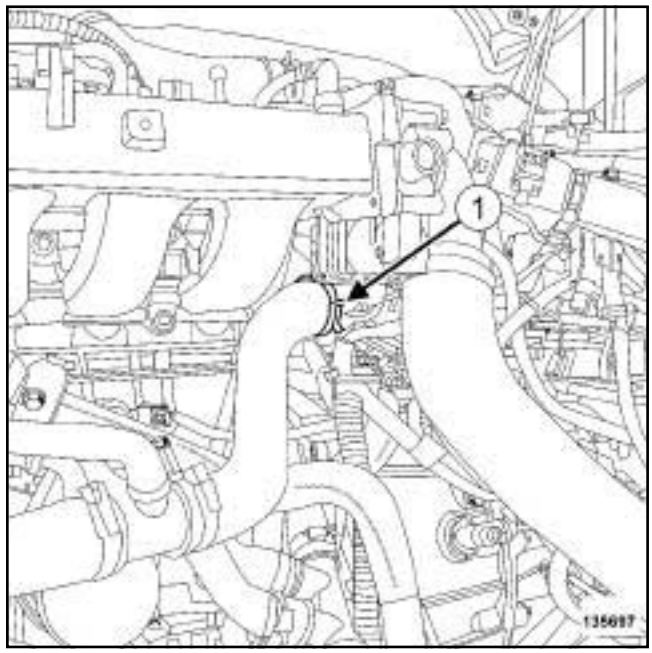

135697

❑ Using the tool **(Mot. 1448)**, separate the clip (**1**) on the water chamber outlet hose.

❑ Disconnect the outlet hose from the water chamber.

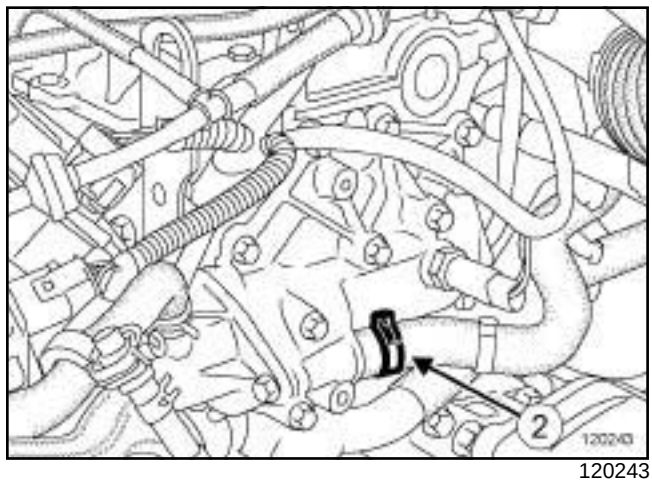

120243

❑ Using the tool **(Mot. 1448)**, separate the clip (**2**) on the heater matrix hose.

❑ Disconnect the heater matrix hose.

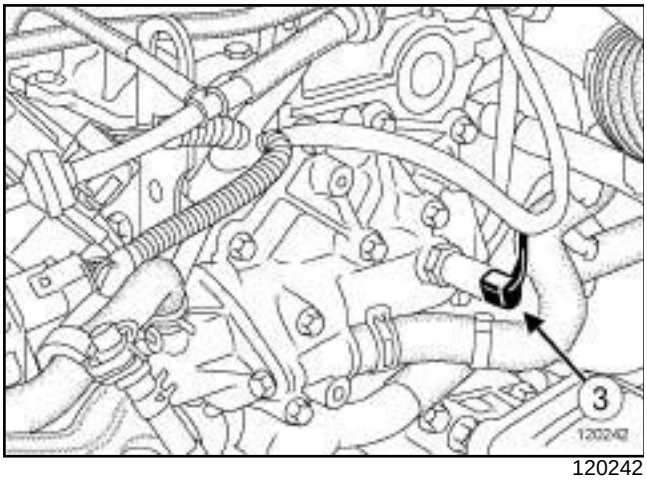

120242

❑ Disconnect the coolant temperature sensor connector (**3**) from the water chamber.

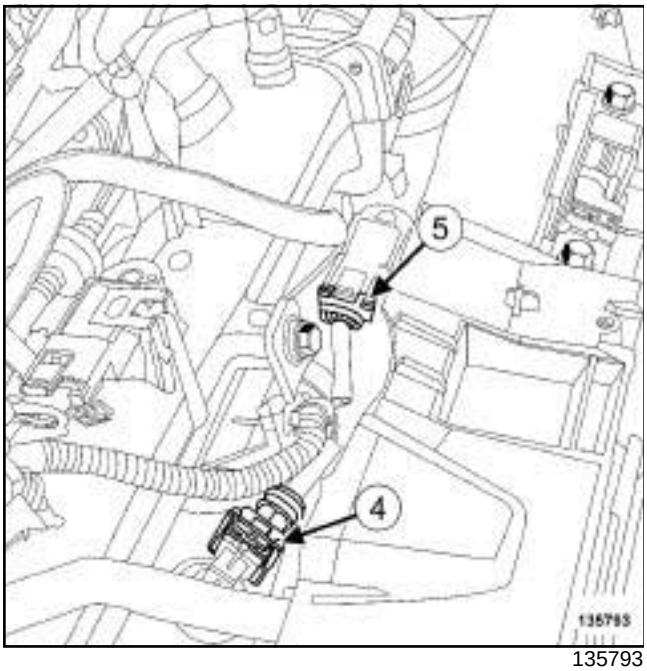

135793

❑ Disconnect:

- the air temperature sensor connector (**4**) on the intercooler air outlet pipe,
- the air pressure sensor connector (**5**) on the intercooler air outlet pipe.

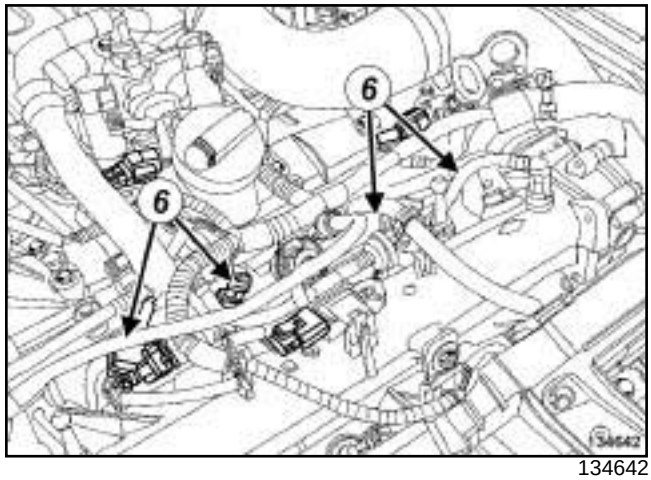

134642

❑ Disconnect the injector connectors (**6**) .

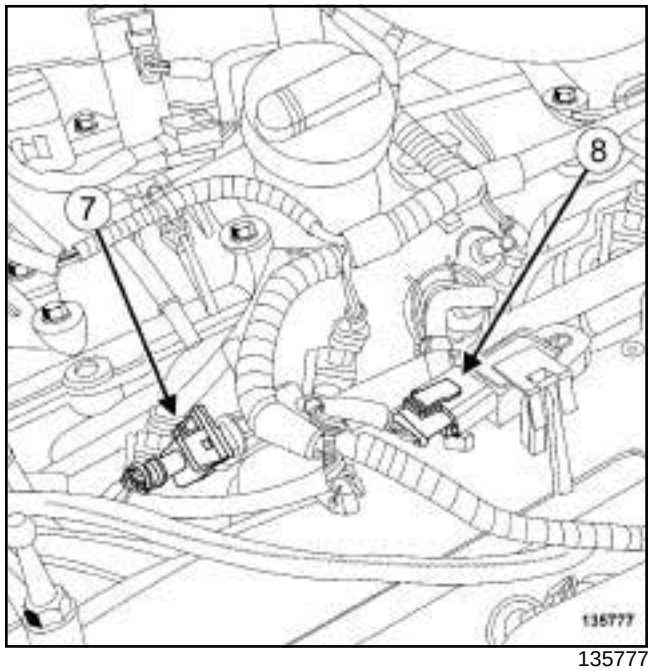

135777

❑ Disconnect:

- the oil vapour rebreathing solenoid valve connector (**7**) ,
- the air pressure sensor connector (**8**) on the inlet manifold.

F4R

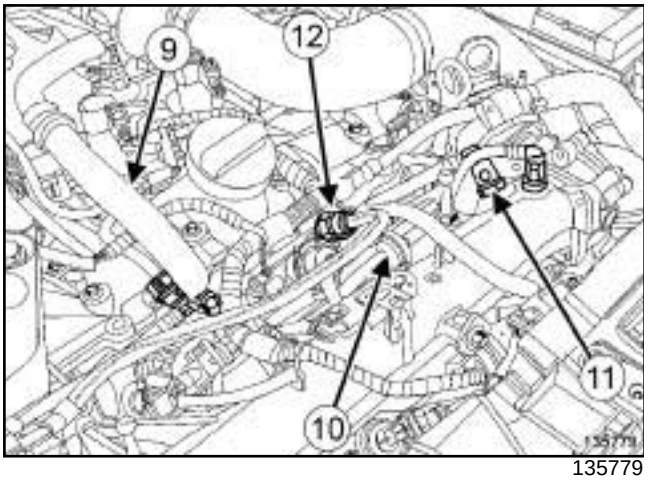

135779

- Remove:
  - the oil vapour rebreathing pipe (**9**) ,
  - the petrol vapour rebreathing pipe (**10**) .
- Disconnect the vacuum pipe connector (**11**) from the brake servo.
- Move the brake servo vacuum pipe to one side.
- Disconnect the fuel supply pipe (**12**) from the injector rail.
- Move the fuel supply pipe aside.

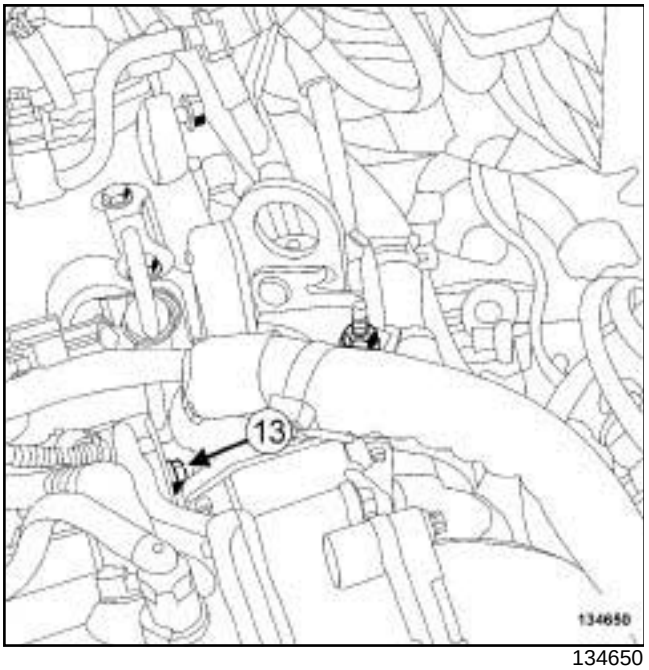

134650

- Remove:
  - the dipstick guide bolt (**13**) ,
  - the dipstick tube.

F4R

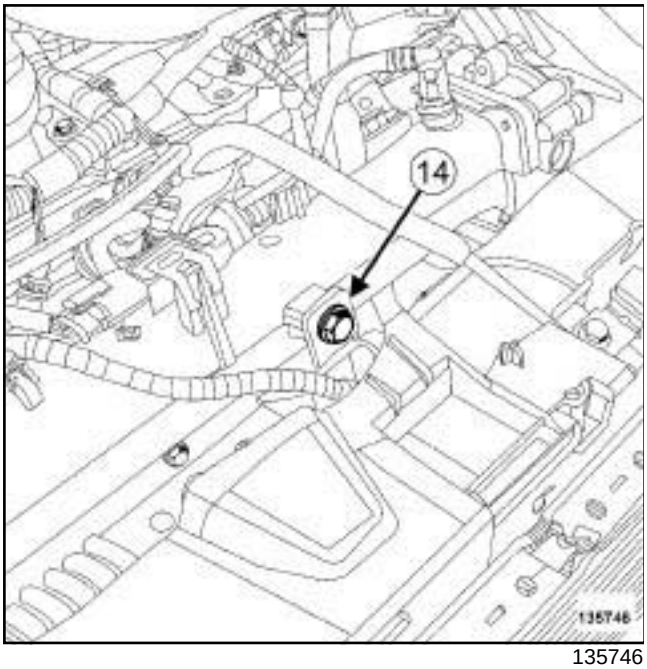

135746

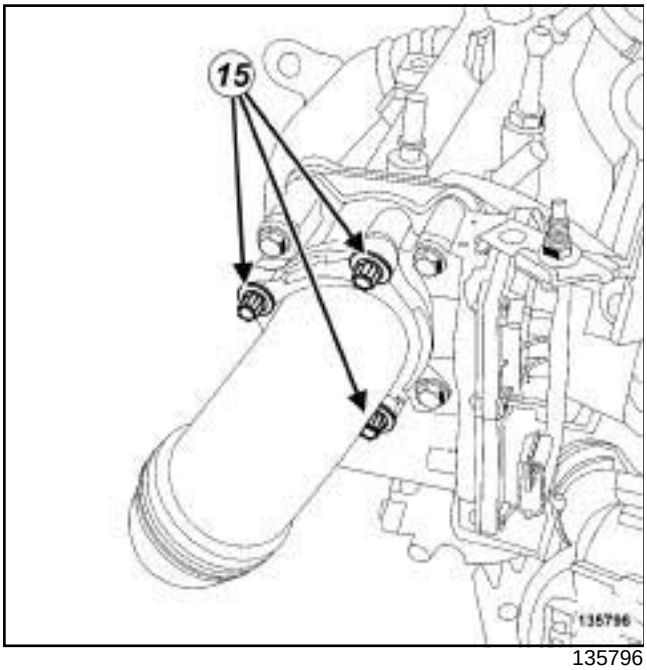

135796

❑ Remove:

- the bolt (**14**) from the intercooler air outlet pipe on the inlet manifold,
- the bolts (**15**) from the intercooler air outlet pipe on the throttle valve.

❑ Move the intercooler air outlet pipe to one side.

❑ Remove:

- the camshaft position sensor (see **17B**, **Petrol injection**, **Camshaft position sensor: Removal - Refitting**, page **17B-13**) ,
- the camshaft dephaser solenoid valve (see **11A**, **Top and front of engine**, **Camshaft dephaser solenoid valve: Removal - Refitting**, page **11A-184**) ,
- the ignition coils (see **17A**, **Ignition**, **Coils Removal - Refitting**, page **17A-1**) ,
- the spark plugs (see **17A**, **Ignition**, **Spark plugs: Removal - Refitting**, page **17A-5**) .

❑ Move aside the engine wiring.

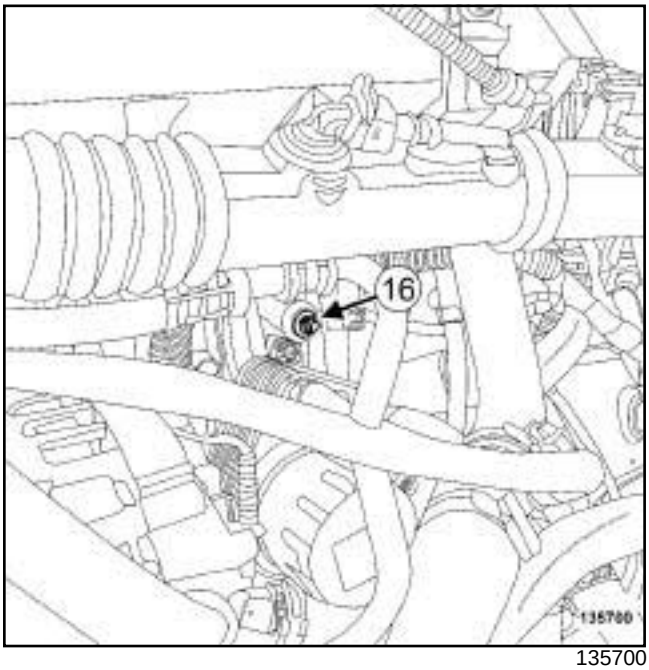

135700

❑ Remove:

- the bolt (**16**) from the air conditioning pipe on the inlet manifold,
- the accessories belt (see **11A**, **Top and front of engine**, **Accessories belt: Removal - Refitting**, page **11A-7**) ,
- the crankshaft accessories pulley (see **11A**, **Top and front of engine**, **Crankshaft accessories pulley: Removal - Refitting**, page **11A-15**) ,
- the right-hand suspended engine mounting (see **19D**, **Engine mounting**, **Right-hand suspended engine mounting: Removal - Refitting**, page **19D-18**) ,
- the timing belt (see **11A**, **Top and front of engine**, **Timing belt: Removal - Refitting**, page **11A-29**) ,
- the lower engine tie-bar (see **19D**, **Engine mounting**, **Lower engine tie-bar: Removal - Refitting**, page **19D-33**) .

❑ Drain the manual gearbox (see **Manual gearbox oil: Draining - Refilling**) (21A, Manual gearbox).

F4R

❑ Remove:

- the front right-hand wheel driveshaft (see **Front right-hand wheel driveshaft: Removal - Refitting**) (29A, Driveshafts),
- the right-hand differential output seal (see **Front right-hand wheel driveshaft: Removal - Refitting**) (21A, Manual gearbox),
- the catalytic converter (see **19B**, **Exhaust**, **Catalytic converter: Removal - Refitting**, page **19B-17**) ,
- the turbocharger (see **12B**, **Turbocharging**, **Turbocharger: Removal - Refitting**, page **12B-8**) ,
- the oil separator (see **11A**, **Top and front of engine**, **Oil decanter: Removal - Refitting**, page **11A-205**) ,
- the rocker cover (see **11A**, **Top and front of engine**, **Rocker cover: Removal - Refitting**, page **11A-88**) ,
- the camshafts (see **11A**, **Top and front of engine**, **Camshaft: Removal - Refitting**, page **11A-114**) ,
- the timing end camshaft seals (see **11A**, **Top and front of engine**, **Camshaft seal at timing end: Removal - Refitting**, page **11A-186**) .

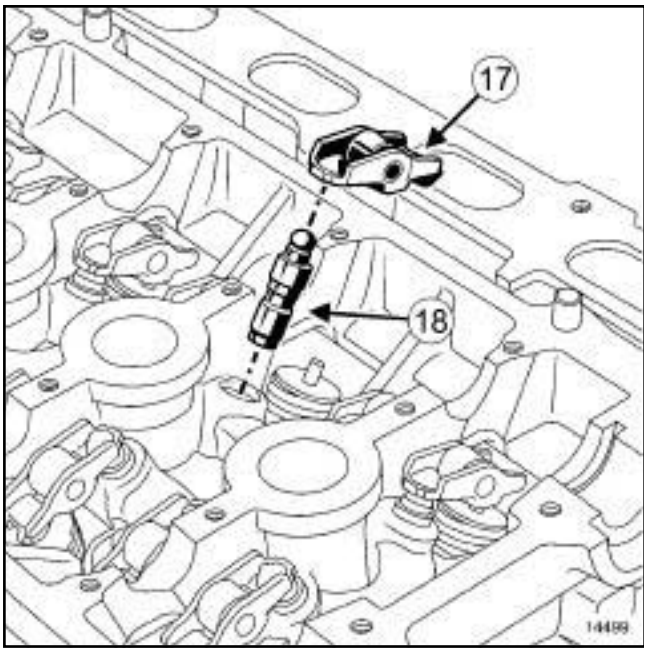

14499

❑

Note:

To prevent any risk of unpriming the hydraulic tappets, make sure that they are vertical.

❑ Remove:

- the valve rockers (**17**) ,
- the hydraulic tappets (**18**) .

II - OPERATION FOR REMOVAL OF PART CONCERNED

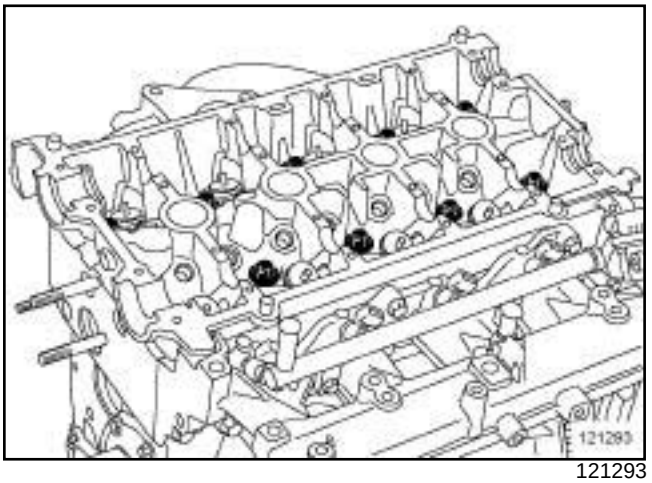

121293

❑ Remove:

- the cylinder head bolts,
- the cylinder head,
- the cylinder head gasket.

REFITTING

I - REFITTING PREPARATION OPERATION

❑ **parts always to be replaced: Cylinder head gasket (10,02,01,04)**.

❑ **parts always to be replaced: Cylinder head bolts (10,02,01,14)**.

F4R

1 - Cleaning the cylinder head joint face

❑

IMPORTANT
Wear goggles with side protectors for this operation.

IMPORTANT
Wear leaktight gloves (Nitrile type) for this operation.

WARNING
Do not scrape the joint faces of the aluminium, any damage caused to the joint face will result in a risk of leaks.

WARNING
Do not allow this product to drip onto the paintwork.

Clean the cylinder head carefully to avoid any foreign bodies entering the oil return and supply pipes.

Failure to follow this advice could lead to the blocking of the various oil inlet galleries, which would quickly result in engine damage.

WARNING
To ensure proper sealing, the gasket surfaces must be clean, dry and not greasy (avoid any finger marks).

WARNING
Protect the oilway so that foreign bodies do not enter the oil pipes in the cylinder head.

Failure to follow this instruction could lead to the blocking of the oilways, resulting in a rapid deterioration of the camshaft.

❑ Clean the joint faces with **SUPER CLEANING AGENT FOR JOINT FACES** (see **Vehicle: Parts and ingredients for the repairwork**) (04B, Consumables - Products):

- the cylinder head gasket face if being reused,

- the cylinder block gasket face.

❑ Use **SURFACE CLEANER** (see **Vehicle: Parts and ingredients for the repairwork**) (04B, Consumables - Products) to degrease:

- the cylinder head gasket face if being reused,

- the cylinder block gasket face.

2 - Checking the gasket face

❑ Check for gasket face deformation using a ruler and a set of shims.

WARNING
No regrinding of the cylinder head is permitted.

❑ The maximum deformation is **0.05 mm**.

Note:

If the cylinder head is faulty:

-strip the cylinder head (see **Stripping the cylinder head**) (Technical Note 6027A, 10A, Engine and cylinder block assembly),

-test the cylinder head in order to detect any possible cracks using the cylinder head test kit (see **Cylinder head testing equipment: Use**) (Technical Note 6026A, 11A, Top and front of engine),

-rebuild the cylinder head (see **Rebuilding the cylinder head**) (Technical Note 6027A, 10A, Engine and cylinder block assembly).

II - OPERATION FOR REFITTING PART CONCERNED

❑ Bring the pistons to mid-stroke position to prevent any risk of contact with the valves when tightening the cylinder head.

WARNING
To ensure proper sealing, the gasket surfaces must be clean, dry and not greasy (avoid any finger marks).

WARNING
In order to ensure that the bolts are correctly tightened, use a syringe to remove any oil which may be in the cylinder head mounting holes.

WARNING
Do not oil the new bolts. Be sure to oil bolts being reused.

F4R

❑ Fit:

- a new cylinder head gasket,
- the cylinder head equipped with new bolts on the cylinder block.

❑ Check that the centring devices are present and in good condition on the cylinder block.

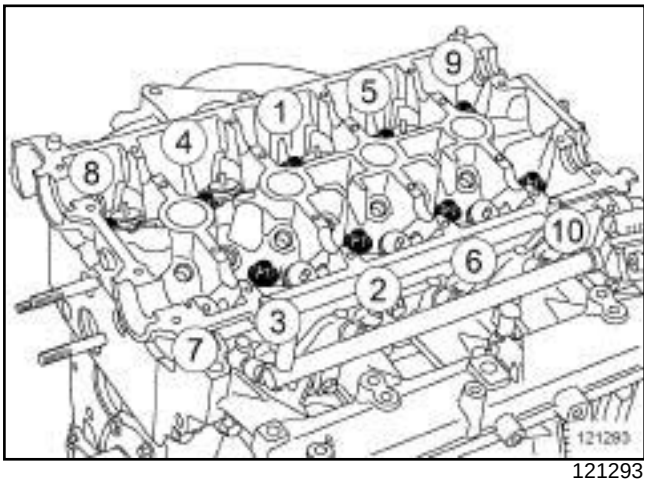

121293

❑ Fit the new cylinder head bolts in order without tightening.

❑ Pretighten in order and to torque the **cylinder head bolts (30 N.m)**.

❑ Check that all new cylinder head bolts are correctly tightened to a torque of **30 N.m**.

❑ Angle tighten in order the **cylinder head bolts (180° ± 25°)**.

> Note:
>
> Do not retighten the cylinder head bolts after applying this procedure.

III - FINAL OPERATION

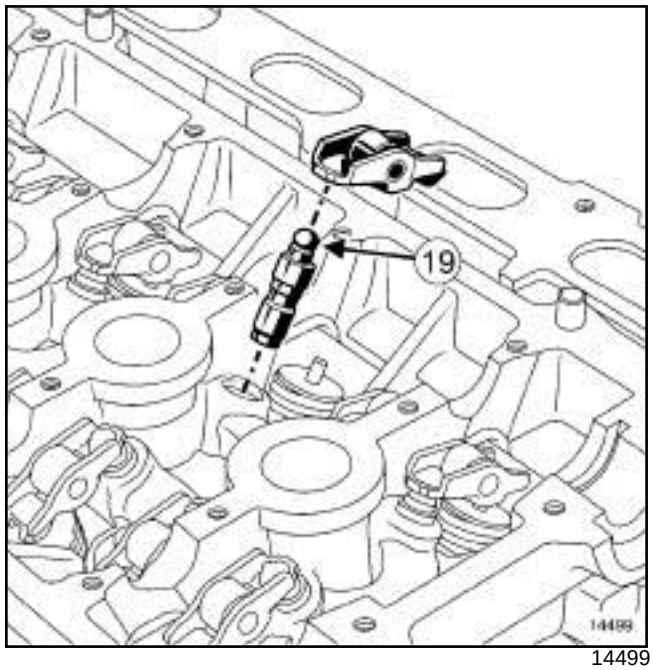

14499

❑

> Note:
>
> Because this engine is equipped with hydraulic tappets, there is no valve clearance adjustment.

❑ Reprime the hydraulic tappets (hydraulic tappets may empty if they have been removed for some time).

❑ To check if repriming is necessary, press the top of the tappet (**19**) with your thumb.

❑ If the tappet piston sinks, dip the tappet in a container filled with diesel.

❑ Press on the top of the tappet to expel air bubbles.

❑ Refit:

- the hydraulic tappets,
- the valve rockers.

❑ Refit:

- the camshafts (see **11A**, **Top and front of engine**, **Camshaft: Removal - Refitting**, page **11A-114**) ,
- the rocker cover (see **11A**, **Top and front of engine**, **Rocker cover: Removal - Refitting**, page **11A-88**) ,
- new timing end camshaft seals (see **11A**, **Top and front of engine**, **Camshaft seal at timing end: Removal - Refitting**, page **11A-186**) ,
- the oil separator (see **11A**, **Top and front of engine**, **Oil decanter: Removal - Refitting**, page **11A-205**) ,

- the turbocharger (see **12B**, **Turbocharging**, **Turbocharger: Removal - Refitting**, page **12B-8**) ,
- the catalytic converter (see **19B**, **Exhaust**, **Catalytic converter: Removal - Refitting**, page **19B-17**) ,
- a new right-hand differential output seal (see **Differential output seal: Removal - Refitting**) (21A, Manual gearbox),
- the front right-hand wheel driveshaft (see **Front right-hand wheel driveshaft: Removal - Refitting**) (29A, Driveshafts).

❑ Fill the manual gearbox (see **Manual gearbox oil: Draining - Refilling**) (21A, Manual gearbox),

❑ Refit:

- the lower engine tie-bar (see **19D**, **Engine mounting**, **Lower engine tie-bar: Removal - Refitting**, page **19D-33**) ,
- the timing belt (see **11A**, **Top and front of engine**, **Timing belt: Removal - Refitting**, page **11A-29**) ,
- the right-hand suspended engine mounting (see **19D**, **Engine mounting**, **Right-hand suspended engine mounting: Removal - Refitting**, page **19D-18**) ,
- the crankshaft accessories pulley (see **11A**, **Top and front of engine**, **Crankshaft accessories pulley: Removal - Refitting**, page **11A-15**) ,
- the accessories belt (see **11A**, **Top and front of engine**, **Accessories belt: Removal - Refitting**, page **11A-7**) ,
- the air conditioning pipe bolt on the inlet manifold.

❑ Fit the engine wiring.

❑ Refit:

- the spark plugs (see **17A**, **Ignition**, **Spark plugs: Removal - Refitting**, page **17A-5**) ,
- the ignition coils (see **17A**, **Ignition**, **Coils Removal - Refitting**, page **17A-1**) ,
- the camshaft dephaser solenoid valve (see **11A**, **Top and front of engine**, **Camshaft dephaser solenoid valve: Removal - Refitting**, page **11A-184**) ,
- the camshaft position sensor (see **17B**, **Petrol injection**, **Camshaft position sensor: Removal - Refitting**, page **17B-13**) .

❑ Fit the intercooler air outlet pipe.

❑ Refit:

- the bolts of the intercooler air outlet pipe on the throttle valve,
- the bolt of the intercooler air outlet pipe on the inlet manifold,
- the dipstick guide.

❑ Connect:

- the fuel supply pipe to the injector rail,
- brake servo vacuum pipe ,
- the brake servo vacuum pipe connector,

❑ Refit:

- the fuel vapour rebreathing pipe,
- the oil vapour rebreathing pipe.

❑ Connect:

- the air pressure sensor connector to the inlet manifold,
- the oil vapour rebreathing solenoid valve connector,
- the injector connectors,
- the air pressure sensor connector to the intercooler air outlet pipe.
- the air temperature sensor connector to the intercooler air outlet pipe,
- the coolant temperature sensor connector to the water chamber,
- the heater matrix hose,
- the cooling hose to the water chamber.

❑ Using the **(Mot. 1448)**, fit:

- the heater matrix hose clip,
- the clip of the water chamber outlet hose.

❑ Refit:

- the scoop under the scuttle panel grille (see **Scoop under scuttle panel grille: Removal - Refitting**) (56A, Exterior equipment),
- the scuttle panel grille (see **Scuttle panel grille: Removal - Refitting**) (56A, Exterior equipment),
- the windscreen wiper arms (see **Windscreen wiper arm: Removal - Refitting**) (85A, Wiping - Washing),
- the radiator mounting cross member (see **Radiator support cross member: Removal - Refitting**) (31A, Front axle components),
- the front bumper (see **Front bumper: Removal - Refitting**) (55A, Exterior protection),
- the front section of the front wheel arch liners (see **Front wheel arch liner: Removal - Refitting**) (55A, Exterior protection),

- the front wheels (see **Wheel: Removal - Refitting**) (35A, Wheels and tyres),
- the engine undertray,
- the battery tray (see **Battery : Removal - Refitting**) (80A, Battery),
- the battery (see **Battery : Removal - Refitting**) (80A, Battery),
- the engine cover,

❑ Fill and bleed the cooling system (see **19A**, **Cooling**, **Cooling circuit: Draining - Refilling**, page **19A-17**) .

F9Q

Essential special tooling	
Mot. 1448	Long nose pliers for hose clips.
Mot. 1390	Support for removing/refitting the engine - gearbox assembly.
Mot. 1453	Multiple-adjusting engine mounting support with retaining straps.

Tightening torques ▽	
cylinder head bolts (initial torque)	**30 N.m**
cylinder head bolts	**230° ± 6°**
bolt for the high pressure pump rear support	**30 N.m**

REMOVAL

I - REMOVAL PREPARATION OPERATION

❑ Position the vehicle on a two-post lift (see **Vehicle: Towing and lifting**) (02A, Lifting equipment).

❑ Remove:

- the engine cover,
- the engine undertray bolts,
- the engine undertray,

❑ Drain the cooling system (see **19A**, **Cooling**, **Cooling circuit: Draining - Refilling**, page **19A-17**) .

❑ Remove:

- the windscreen wiper arms (see **Windscreen wiper arm: Removal - Refitting**) (85A, Wiping - Washing),
- the scuttle panel grille (see **Scuttle panel grille: Removal - Refitting**) (56A, Exterior equipment),
- the scoop under the scuttle panel grille (see **Scoop under scuttle panel grille: Removal - Refitting**) (56A, Exterior equipment),
- the battery (see **Battery: Removal - Refitting**) (80A, Battery),
- the battery tray (see **Battery tray: Removal - Refitting**) (80A, Battery),
- the intercooler air inlet pipe (see **12B**, **Turbocharging**, **Intercooler air inlet pipe: Removal - Refitting**, page **12B-41**) ,
- the turbocharger outlet exhaust gas duct (see **12B**, **Turbocharging**, **Turbocharger outlet exhaust gas duct: Removal - Refitting**, page **12B-49**) ,
- the turbocharger oil pipe (see **12B**, **Turbocharging**, **Turbocharger oil pipe: Removal - Refitting**, page **12B-22**) ,
- the exhaust gas recirculation assembly (see **14A**, **Antipollution**, **Exhaust gas recirculation assembly: Removal - Refitting**, page **14A-18**) ,
- the lower engine tie-bar (see **19D**, **Engine mounting**, **Lower engine tie-bar: Removal - Refitting**, page **19D-33**) ,
- the turbocharger (see **12B**, **Turbocharging**, **Turbocharger: Removal - Refitting**, page **12B-8**) ,
- the accessories belt (see **11A**, **Top and front of engine**, **Accessories belt: Removal - Refitting**, page **11A-7**) ,
- the crankshaft accessories pulley (see **11A**, **Top and front of engine**, **Crankshaft accessories pulley: Removal - Refitting**, page **11A-15**) ,
- the right-hand suspended engine mounting (see **19D**, **Engine mounting**, **Right-hand suspended engine mounting: Removal - Refitting**, page **19D-18**) ,
- the timing belt (see **11A**, **Top and front of engine**, **Timing belt: Removal - Refitting**, page **11A-29**) ,
- the injector rail protector (see **13B**, **Diesel injection**, **Injector rail protector: Removal - Refitting**, page **13B-70**) ,
- the fuel temperature sensor (see **13B**, **Diesel injection**, **Fuel temperature sensor: Removal - Refitting**, page **13B-118**) ,
- the oil separator (see **11A**, **Top and front of engine**, **Oil decanter: Removal - Refitting**, page **11A-205**) .
- the intercooler air outlet pipe (see **12B**, **Turbocharging**, **Intercooler air outlet pipe: Removal - Refitting**, page **12B-56**) .

F9Q

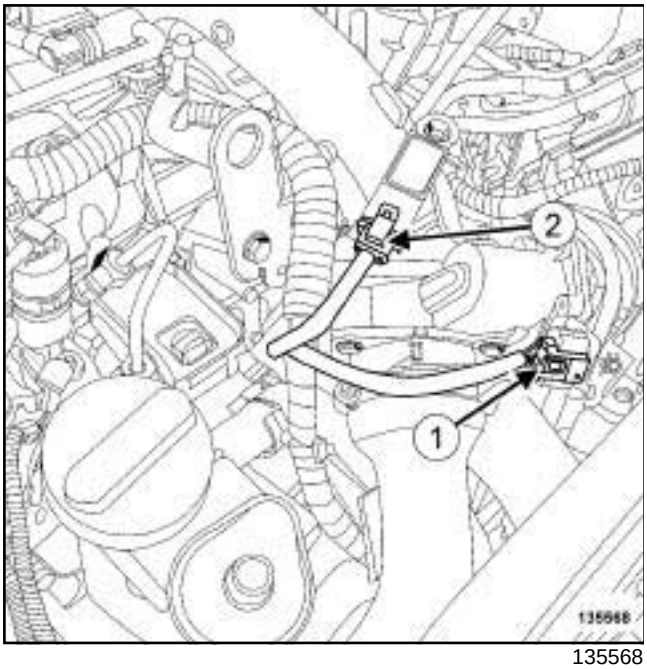

135568

❑ Disconnect:

- the damper valve connector (**1**) ,
- the inlet pressure sensor connector (**2**) .

❑ Separate the injection wiring.

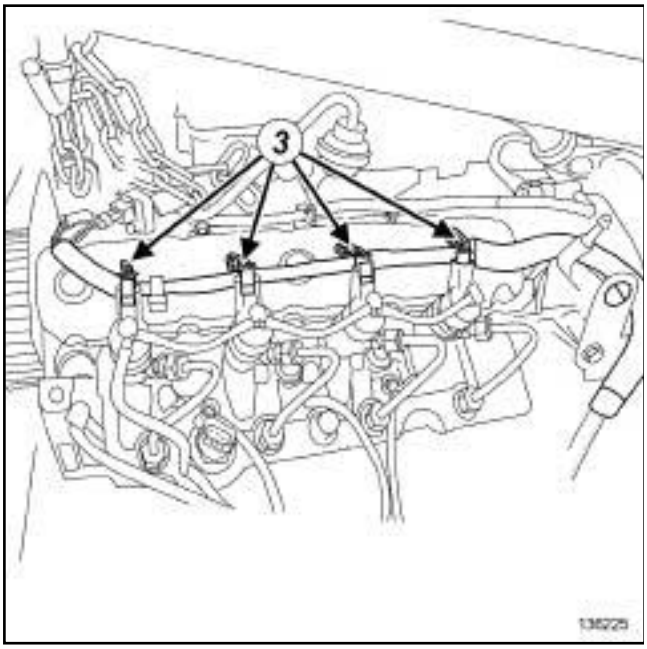

136225

❑ Disconnect the injector connectors (**3**) .

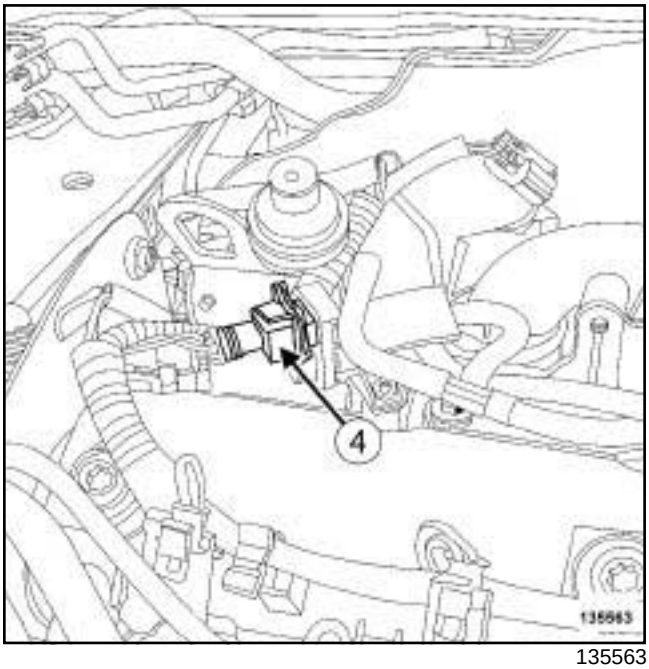

135563

❑ Disconnect the connector (**4**) from the EGR bypass control solenoid valve.

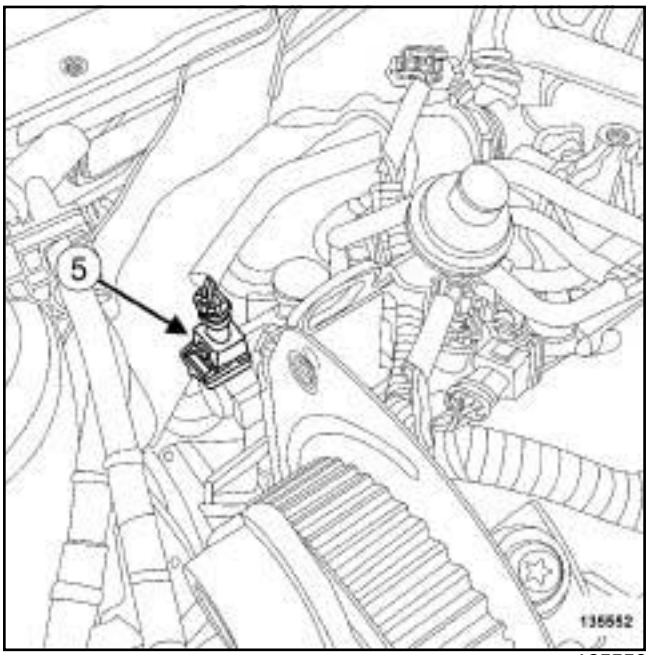

135552

❑ Disconnect the connector (**5**) from the turbocharger control solenoid valve.

F9Q

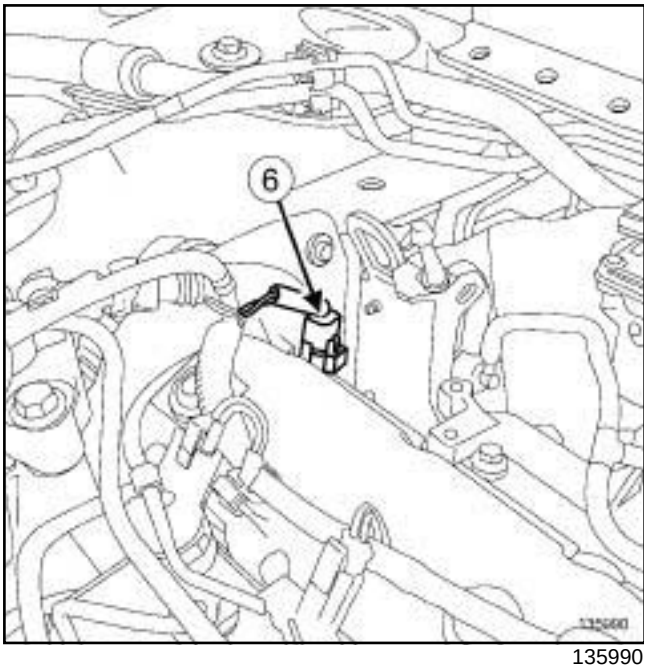

135990

❑ Disconnect the connector (**6**) from the camshaft position sensor.

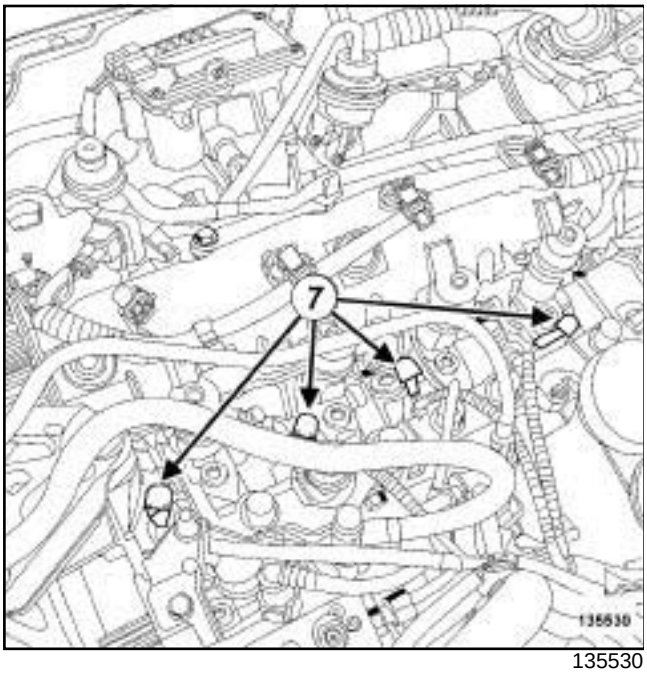

135530

❑ Disconnect the heater plug connectors (**7**) .

❑ Separate the injection wiring.

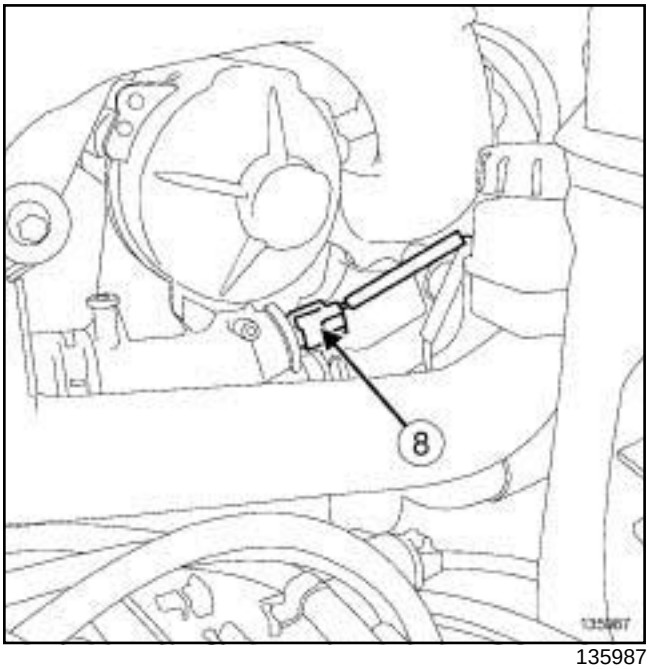

135987

❑ Disconnect the coolant temperature sensor connector (**8**) .

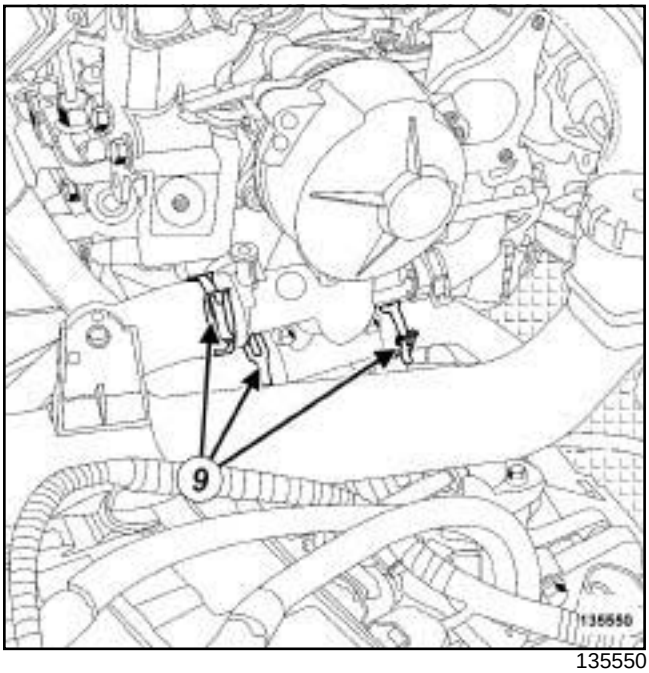

135550

❑ Separate the clips (**9**) from the water chamber hoses using the tool **(Mot. 1448)**.

❑ Disconnect the water chamber hoses.

F9Q

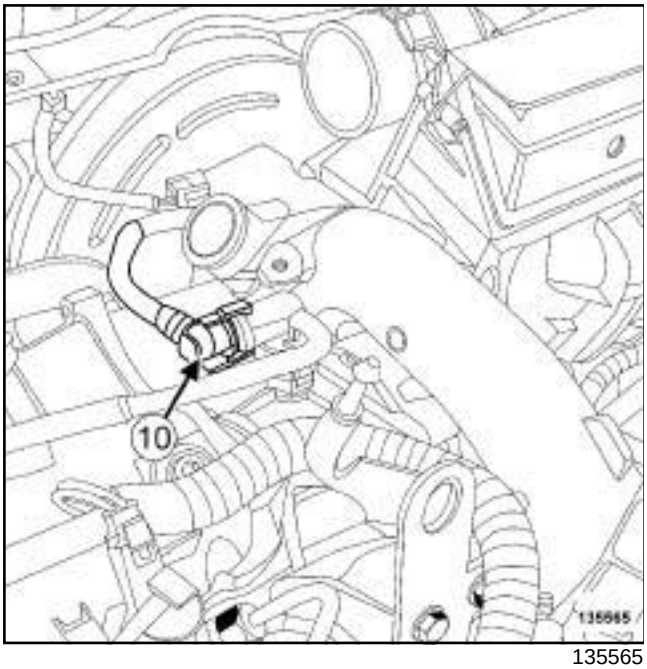

135565

❑ Disconnect the vacuum pipe (**10**) from the vacuum pump.

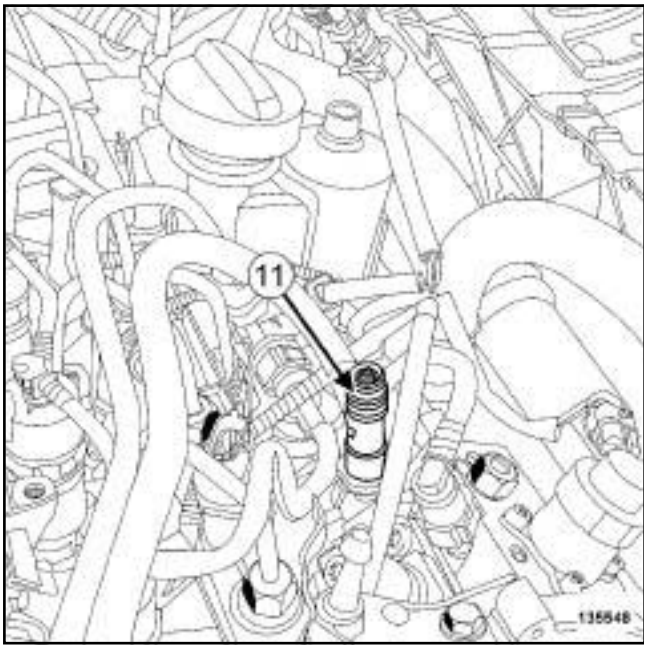

135548

❑

WARNING

To prevent impurities from entering the circuit, place protective plugs on all fuel circuit components exposed to the open air.

❑ Disconnect the fuel supply pipe union (**11**) from the high pressure pump.

❑ Fit blanking plugs.

❑ Position the **(Mot. 1390)** under the engine.

❑ Remove the tool **(Mot. 1453)**.

II - OPERATION FOR REMOVAL OF PART CONCERNED

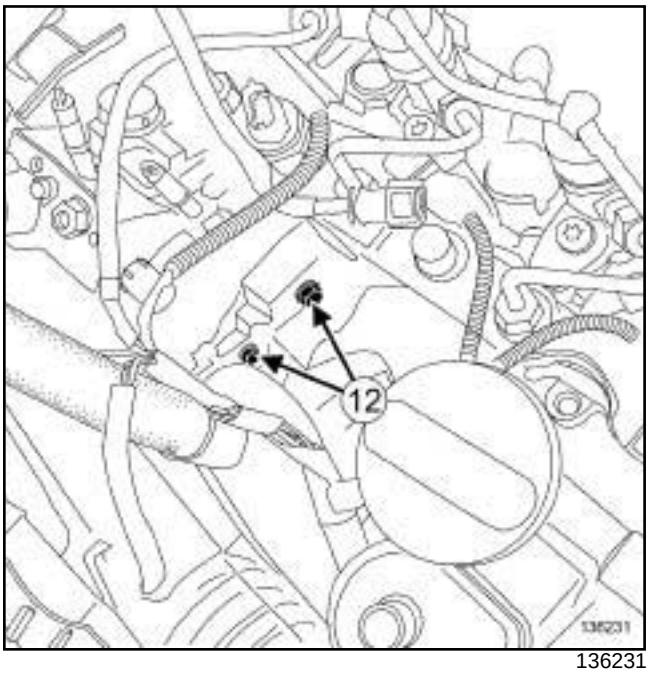

136231

❑ Remove the injection pump rear support bolts (**12**) .

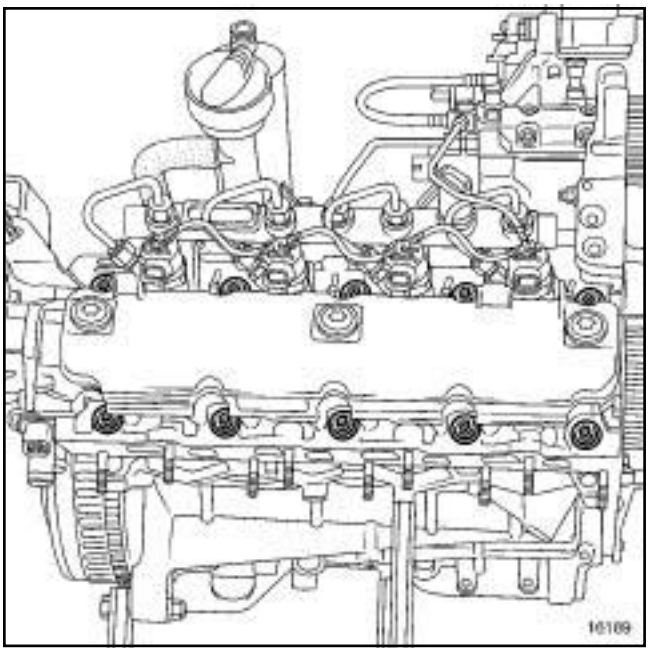

16189

❑ Remove:

- the cylinder head bolts,
- the cylinder head,
- the cylinder head gasket.

F9Q

REFITTING

I - REFITTING PREPARATION OPERATION

❑ **parts always to be replaced: Cylinder head bolts (10,02,01,14)**.

parts always to be replaced: Cylinder head gasket (10,02,01,04).

CLEANING THE CYLINDER HEAD

❑

> **IMPORTANT**
> Wear goggles with side protectors for this operation.

> **IMPORTANT**
> Wear leaktight gloves (Nitrile type) for this operation.

> **WARNING**
> Do not scrape the joint faces of the aluminium, any damage caused to the joint face will result in a risk of leaks.

> **WARNING**
> To ensure proper sealing, the gasket surfaces must be clean, dry and not greasy (avoid any finger marks).

> **WARNING**
> Do not allow this product to drip onto the paintwork.
>
> Clean the cylinder head carefully to avoid any foreign bodies entering the oil return and supply pipes.
>
> Failure to follow this advice could lead to the blocking of the various oil inlet galleries, which would quickly result in engine damage.

❑ Use **SUPER CLEANING AGENT FOR JOINT FACES** (see **Vehicle: Parts and ingredients for the repairwork**) (04B, Consumables - Products) to clean:

- the cylinder head gasket face if being reused,
- the cylinder block gasket face.

❑ Use **SURFACE CLEANER** (see **Vehicle: Parts and ingredients for the repairwork**) (04B, Consumables - Products) to degrease:

- the cylinder head gasket face if being reused,
- the cylinder block gasket face.

❑ Use a ruler and a set of feeler gauges to check the gasket face deformation (the maximum deformation is **0.05 mm**).

> **WARNING**
> No regrinding of the cylinder head is permitted.

❑ Strip the cylinder head (see **Cylinder head: Dismantling**) (Technical Note 6007A, 10A, Engine and cylinder block assembly).

❑ Test the cylinder head for possible cracks using the cylinder head test kit (see **Garage Equipment Catalogue**).

❑ Rebuild the cylinder head (see **Cylinder head: Refitting**) (Technical Note 6007A, 10A, Engine and cylinder block assembly).

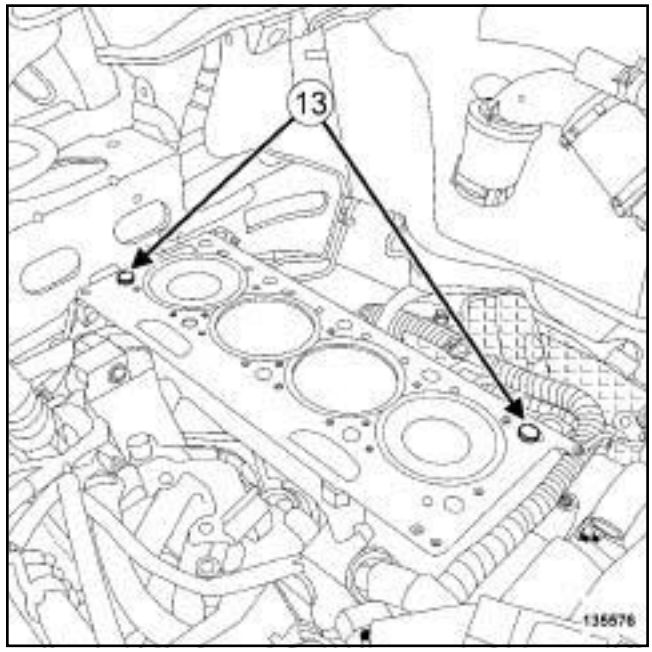

135576

❑ Check for the presence of centring dowels (**13**) on the cylinder block.

II - REFITTING OPERATION FOR PART CONCERNED

❑ Refit:

- a new cylinder head gasket,
- the cylinder head,
- new cylinder head bolts.

F9Q

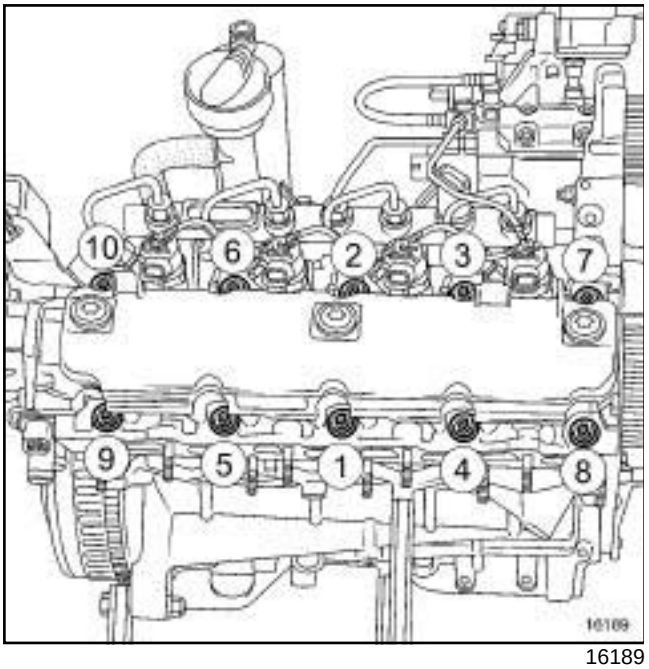

16189

❑

WARNING
In order to ensure that the bolts are correctly tightened, use a syringe to remove any oil which may be in the cylinder head mounting holes.

❑ Pretighten in order and to torque the **cylinder head bolts (initial torque) (30 N.m)**.

❑ Check that all the cylinder head bolts are correctly tightened to the torque of **30 N.m**.

❑ Angle tighten in order the **cylinder head bolts (230° ± 6°)**.

❑ Refit the high pressure pump support bolts

❑ Torque tighten the **bolt for the high pressure pump rear support (30 N.m)**.

III - FINAL OPERATION

❑ Position the **(Mot. 1453)**.

❑ Remove the tool **(Mot. 1390)**.

❑ Remove the blanking plugs.

❑ Connect:

- the fuel supply pipe union to the high pressure pump,
- the vacuum pipe to the vacuum pump.

❑ Connect the water chamber hoses.

❑ Fit the hose clips of the water chamber using the tool **(Mot. 1448)**.

❑ Connect the coolant temperature sensor connector.

❑ Fit the injection wiring.

❑ Connect:

- the heater plug connectors,
- the camshaft position sensor connector,
- the turbocharger control solenoid valve connector,
- the EGR bypass control solenoid valve connector,
- the injector connectors,
- the inlet pressure sensor connector,
- the connector to the damper flap.

❑ Refit:

- the intercooler air outlet pipe (see **12B**, **Turbocharging**, **Intercooler air outlet pipe: Removal - Refitting**, page **12B-56**) ,
- the oil separator (see **11A**, **Top and front of engine**, **Oil decanter: Removal - Refitting**, page **11A-205**) .
- the fuel temperature sensor (see **13B**, **Diesel injection**, **Fuel temperature sensor: Removal - Refitting**, page **13B-118**) ,
- the injector rail protector (see **13B**, **Diesel injection**, **Injector rail protector: Removal - Refitting**, page **13B-70**) ,
- the timing belt (see **11A**, **Top and front of engine**, **Timing belt: Removal - Refitting**, page **11A-29**) ,
- the right-hand suspended engine mounting (see **19D**, **Engine mounting**, **Right-hand suspended engine mounting: Removal - Refitting**, page **19D-18**) ,
- the crankshaft accessories pulley (see **11A**, **Top and front of engine**, **Crankshaft accessories pulley: Removal - Refitting**, page **11A-15**) ,
- the accessories belt (see **11A**, **Top and front of engine**, **Accessories belt: Removal - Refitting**, page **11A-7**) ,
- the turbocharger (see **12B**, **Turbocharging**, **Turbocharger: Removal - Refitting**, page **12B-8**) ,
- the lower engine tie-bar (see **19D**, **Engine mounting**, **Lower engine tie-bar: Removal - Refitting**, page **19D-33**) ,
- the exhaust gas recirculation assembly (see **14A**, **Antipollution**, **Exhaust gas recirculation assembly: Removal - Refitting**, page **14A-18**) ,
- the turbocharger oil pipe (see **12B**, **Turbocharging**, **Turbocharger oil pipe: Removal - Refitting**, page **12B-22**) ,

- the turbocharger outlet exhaust gas duct (see **12B**, **Turbocharging**, **Turbocharger outlet exhaust gas duct: Removal - Refitting**, page **12B-49**) ,
- the intercooler air inlet pipe (see **12B**, **Turbocharging**, **Intercooler air inlet pipe: Removal - Refitting**, page **12B-41**) ,
- the battery tray (see **Battery tray: Removal - Refitting**) (80A, Battery),
- the diesel injection computer (see **13B**, **Diesel injection**, **Diesel injection computer: Removal - Refitting**, page **13B-17**) ,
- the battery (see **Battery : Removal - Refitting**) (80A, Battery),
- the scoop under the scuttle panel grille (see **Scoop under scuttle panel grille: Removal - Refitting**) (56A, Exterior equipment),
- the scuttle panel grille (see **Scuttle panel grille: Removal - Refitting**) (56A, Exterior equipment),
- the windscreen wiper arms (see **Windscreen wiper arm: Removal - Refitting**) (85A, Wiping - Washing).
- the engine undertray,
- the engine cover.

❑ Fill and bleed the cooling system (see **19A**, **Cooling**, **Cooling circuit: Draining - Refilling**, page **19A-17**) .

K4M

Essential special tooling	
Mot. 1448	Long nose pliers for hose clips.
Mot. 1202-01	Pliers for large hose clips.
Mot. 1202-02	Pliers for small hose clips.
Mot. 1573	Cylinder head support

Tightening torques ▽	
new cylinder head bolts (initial torque)	**20 N.m**
new cylinder head bolts	**240° ± 6°**
lifting eye bolts	**10 N.m**
dipstick guide tube bolt	**10 N.m**

IMPORTANT
Wear protective gloves during the operation.

REMOVAL

I - REMOVAL PREPARATION OPERATION

❑ Position the vehicle on a two-post lift (see **Vehicle: Towing and lifting**) (02A, Lifting equipment).

❑ Disconnect the battery (see **Battery: Removal - Refitting**) (80A, Battery).

❑ Remove:

- the engine cover,
- the throttle valve (see **12A**, **Fuel mixture**, **Throttle valve: Removal - Refitting**, page **12A-17**) ,
- the windscreen wiper arms (see **Windscreen wiper arm: Removal - Refitting**) (85A, Wiping - Washing)
- the scuttle panel grille (see **Scuttle panel grille: Removal - Refitting**) (56A, Exterior equipment),
- the scoop under the scuttle panel grille (see **Scoop under scuttle panel grille: Removal - Refitting**) (56A, Exterior equipment),
- the front wheels (see **Wheel: Removal - Refitting**) (35A, Wheels and tyres),
- the front section of the front wheel arch liners (see **Front wheel arch liner: Removal - Refitting**) (55A, Exterior protection),
- the engine undertray bolts,
- the engine undertray,
- the front bumper (see **Front bumper: Removal - Refitting**) (55A, Exterior protection),

❑ Drain the cooling system (see **19A**, **Cooling**, **Cooling circuit: Draining - Refilling**, page **19A-17**) .

❑ Remove:

- the lower engine tie-bar (see **19D**, **Engine mounting**, **Lower engine tie-bar: Removal - Refitting**, page **19D-33**) ,
- the accessories belt (see **11A**, **Top and front of engine**, **Accessories belt: Removal - Refitting**, page **11A-7**) ,
- the right-hand suspended engine mounting (see **19D**, **Engine mounting**, **Right-hand suspended engine mounting: Removal - Refitting**, page **19D-18**) ,
- the crankshaft accessories pulley (see **11A**, **Top and front of engine**, **Crankshaft accessories pulley: Removal - Refitting**, page **11A-15**) .

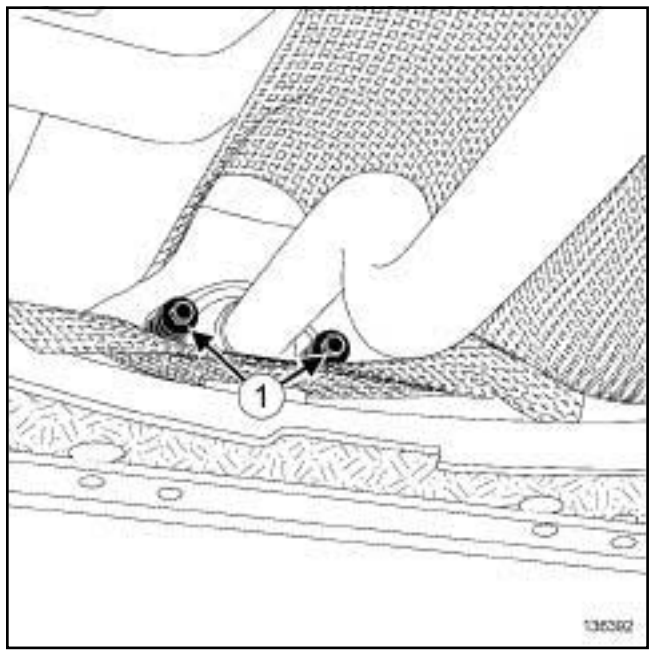

136392

❑ Remove:

- the bolts (**1**) from the exhaust bracket,
- the ring between the exhaust manifold and the catalytic converter.

K4M

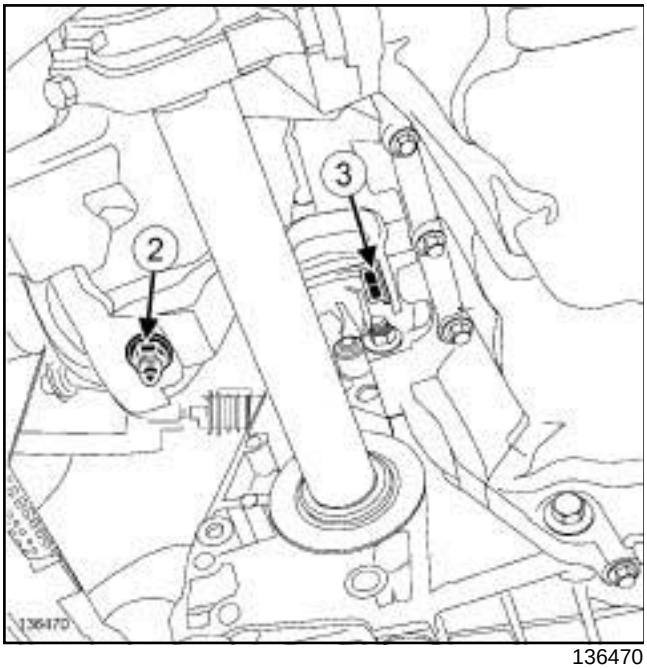

136470

❑ Remove:

- the exhaust manifold strut nut (**2**) from the exhaust manifold,
- the exhaust manifold strut bolt (**3**) from the cylinder block,
- the exhaust manifold strut,
- the timing belt (see **11A**, **Top and front of engine**, **Timing belt: Removal - Refitting**, page **11A-29**) ,
- the inlet manifold (see **12A**, **Fuel mixture**, **Inlet manifold: Removal - Refitting**, page **12A-23**) ,
- the ignition coils (see **17A**, **Ignition**, **Coils Removal - Refitting**, page **17A-1**) ,
- the spark plugs (see **17A**, **Ignition**, **Spark plugs: Removal - Refitting**, page **17A-5**) .

K4M, and 848

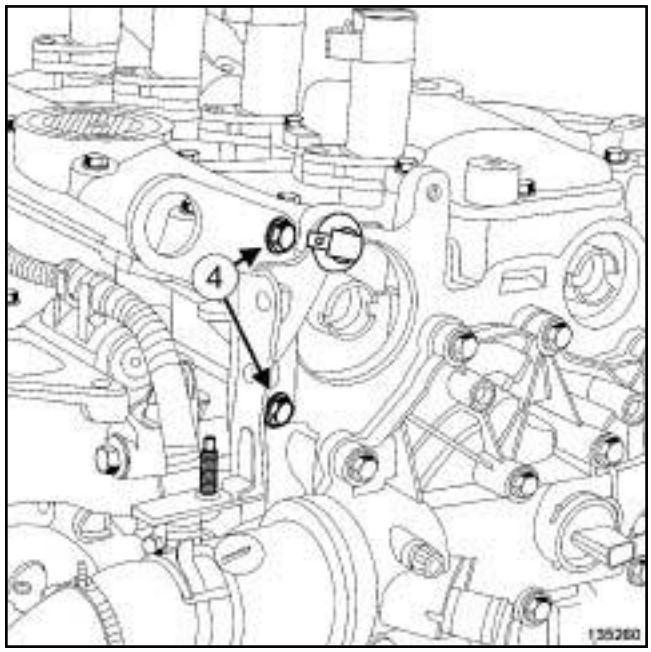

135260

❑ Unclip the wiring from the lifting eye.

❑ Remove:

- the engine wiring retaining nut,
- the dipstick guide bolt,
- the lifting eye bolts (**4**) ,
- the dipstick guide,
- the lifting eye.

K4M, and 858 or 866

❑ Unclip the wiring from the lifting eye.

❑ Remove:

- the engine wiring retaining nut,
- the lifting eye bolts,
- the lifting eye,
- the camshaft position sensor (see **17B**, **Petrol injection**, **Camshaft position sensor: Removal - Refitting**, page **17B-13**) ,
- the camshaft dephaser solenoid valve (see **11A**, **Top and front of engine**, **Camshaft dephaser solenoid valve: Removal - Refitting**, page **11A-184**) ,

K4M

- the camshaft dephaser (see **11A**, **Top and front of engine**, **Camshaft dephaser: Removal - Refitting**, page **11A-177**) .

❑ Remove:

- the oil separator (see **11A**, **Top and front of engine**, **Oil decanter: Removal - Refitting**, page **11A-205**) ,
- the rocker cover (see **11A**, **Top and front of engine**, **Rocker cover: Removal - Refitting**, page **11A-88**) ,
- the camshafts (see **11A**, **Top and front of engine**, **Camshaft: Removal - Refitting**, page **11A-114**) ,
- the camshaft seals (see **11A**, **Top and front of engine**, **Camshaft seal at timing end: Removal - Refitting**, page **11A-186**) ,
- the injector rail (see **17B**, **Petrol injection**, **Injector rail - Injectors: Removal - Refitting**, page **17B-19**) .

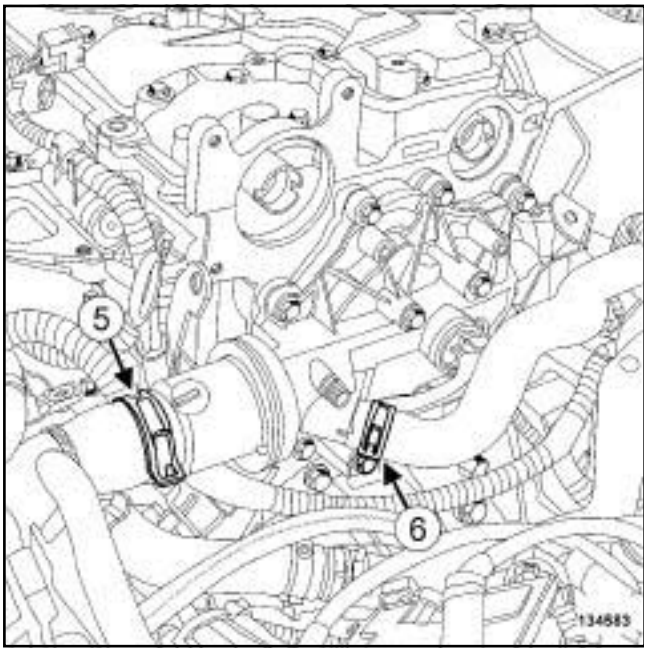

134583

❑ Using the **(Mot. 1448)** or **(Mot. 1202-01)** or **(Mot. 1202-02)** remove:

- the clip (**5**) from the top hose on the water chamber,
- the heater matrix hose clip (**6**) .

❑ Disconnect:

- the top hose on the water chamber,
- the heater matrix hose,
- the coolant temperature sensor connector.

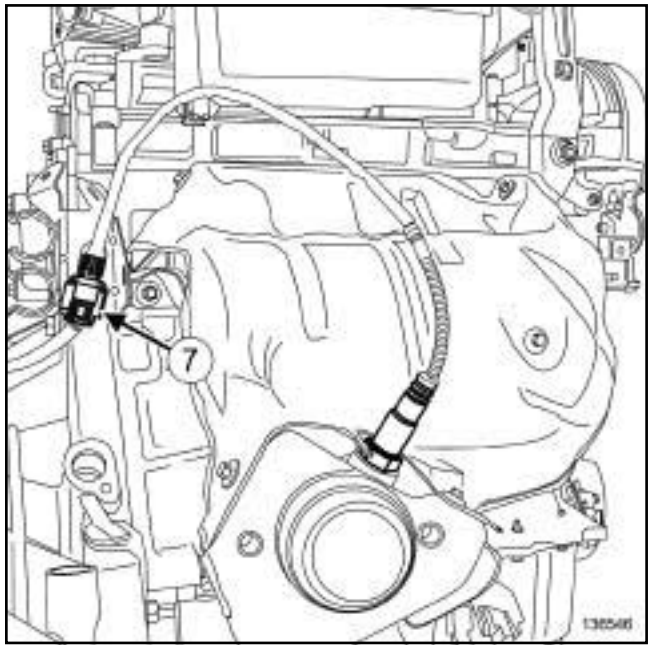

136546

❑ Disconnect the upstream oxygen sensor connector (**7**) .

K4M, and 848

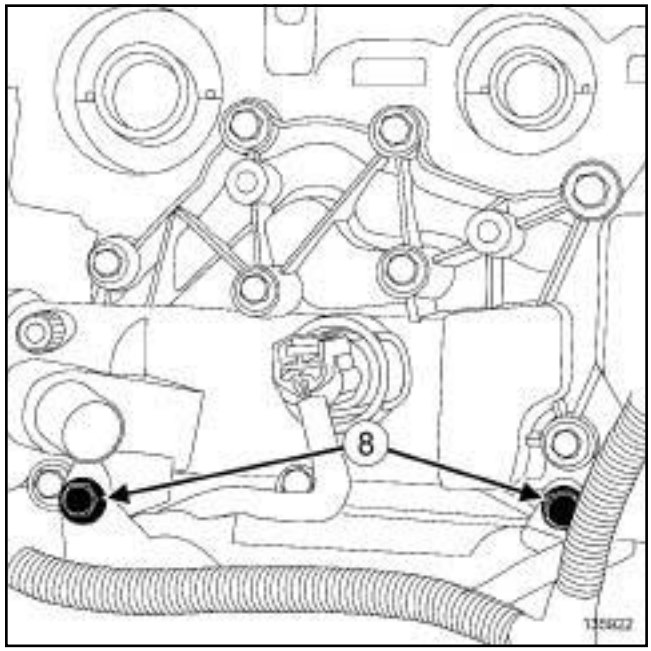

135922

❑ Disconnect the crankshaft position sensor connector.

❑ Remove the bolts (**8**) from the engine wiring channel.

❑ Unclip the wiring of the injector holder shim.

K4M

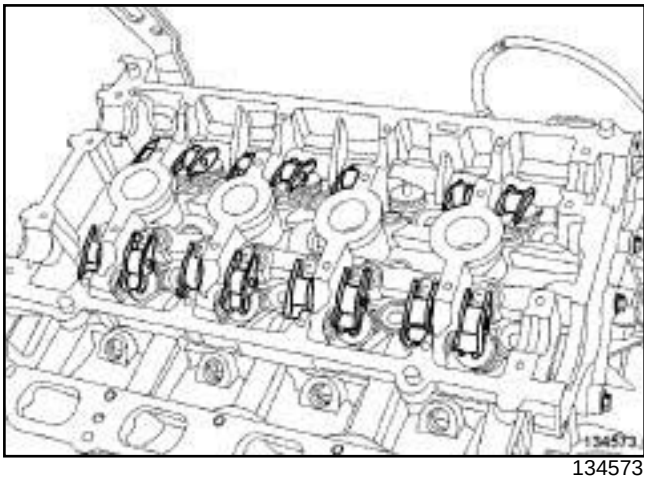
134573

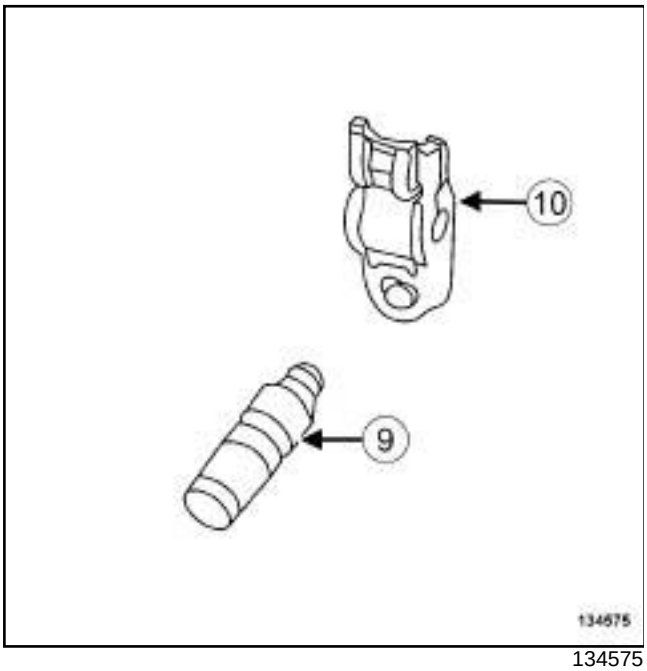

134575

❑

Note:

To prevent any risk of unpriming the hydraulic tappets, make sure that they are vertical.

❑ Remove:

- the valve rockers (**10**) ,
- the hydraulic tappets (**9**) .

II - OPERATION FOR REMOVAL OF PART CONCERNED

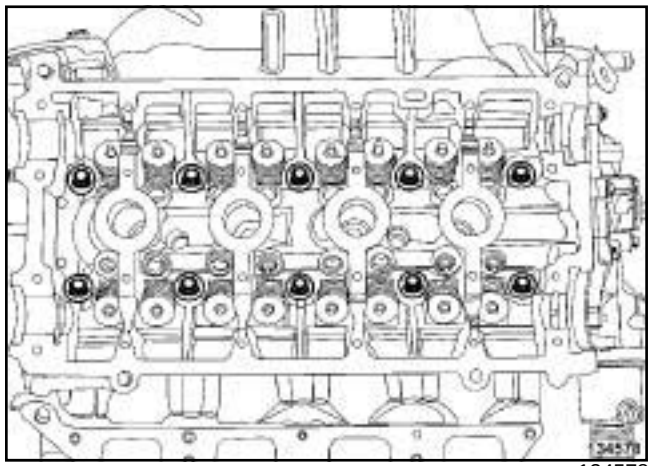
134578

❑ Remove:

- the cylinder head bolts,
- the cylinder head.

❑ Mount the cylinder head on the cylinder head support **(Mot. 1573)**.

❑ Remove the cylinder head gasket from the cylinder block.

REFITTING

I - REFITTING PREPARATION OPERATION

❑ **parts always to be replaced: Cylinder head bolts (10,02,01,14)**.

❑ **parts always to be replaced: Cylinder head gasket (10,02,01,04)**.

❑ **parts always to be replaced: ring between exhaust manifold and catalytic converter (10,08,02, 20)**.

K4M

1 - Cleaning the cylinder head joint face

❑

IMPORTANT
Wear goggles with side protectors for this operation.

IMPORTANT
Wear leaktight gloves (Nitrile type) for this operation.

WARNING
Do not scrape the joint faces of the aluminium, any damage caused to the joint face will result in a risk of leaks.

WARNING
Do not allow this product to drip onto the paintwork.

Clean the cylinder head carefully to avoid any foreign bodies entering the oil return and supply pipes.

Failure to follow this advice could lead to the blocking of the various oil inlet galleries, which would quickly result in engine damage.

WARNING
To ensure proper sealing, the gasket surfaces must be clean, dry and not greasy (avoid any finger marks).

WARNING
Protect the oilway so that foreign bodies do not enter the oil pipes in the cylinder head.

Failure to follow this instruction could lead to the blocking of the oilways, resulting in a rapid deterioration of the camshaft.

❑ Use **SUPER CLEANING AGENT FOR JOINT FACES** (see **Vehicle: Parts and ingredients for the repairwork**) (04B, Consumables - Products) to clean:

- the cylinder head gasket face if being reused,
- the cylinder block gasket face.

❑ Use **SURFACE CLEANER** (see **Vehicle: Parts and ingredients for the repairwork**) (04B, Consumables - Products) to degrease:

- the cylinder head gasket face if being reused,
- the cylinder block gasket face.

2 - Checking the gasket face

❑ Check for gasket face deformation using a ruler and a set of shims.

WARNING
No regrinding of the cylinder head is permitted.

❑ The maximum deformation is **0.05 mm**.

Note:

If the cylinder head is faulty:

- strip down the cylinder head (see **Stripping the cylinder head**) (Technical Note 6023A, 10A, Engine and peripherals),
- test the cylinder head in order to detect any possible cracks using the cylinder head test kit (see **Cylinder head testing equipment: Use**) (Technical Note 6026A, 11A, Top and front of engine),
- rebuild the cylinder head (see **Rebuilding the cylinder head**) (Technical Note 6023A, 10A, Engine and peripherals).

II - REFITTING OPERATION FOR PART CONCERNED

❑ Bring the pistons to mid-stroke position to prevent any risk of contact with the valves when tightening the cylinder head.

WARNING
To ensure proper sealing, the gasket surfaces must be clean, dry and not greasy (avoid any finger marks).

K4M

❑ Fit:

- a new cylinder head gasket,
- the cylinder head equipped with new bolts on the cylinder block.

WARNING
In order to ensure that the bolts are correctly tightened, use a syringe to remove any oil which may be in the cylinder head mounting holes.

WARNING
Do not oil the new bolts. Be sure to oil bolts being reused.

❑ Check that the centring dowel is present on the cylinder block.

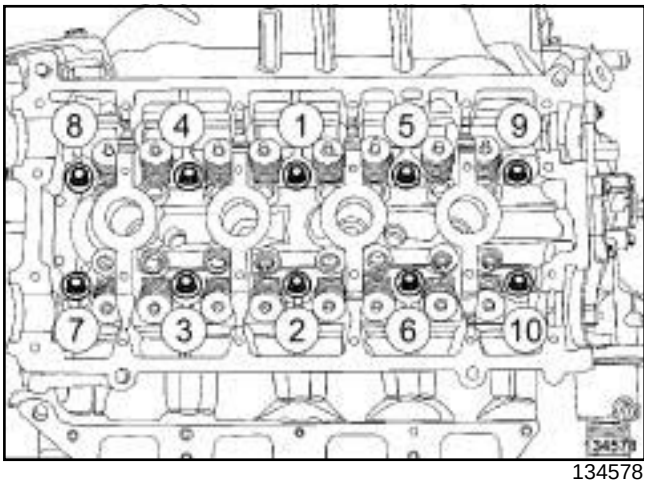

134578

❑ Without tightening, fit the cylinder head bolts in order.

❑ Pretighten in order and to torque the **new cylinder head bolts (initial torque) (20 N.m)**.

❑ Check that all new cylinder head bolts are tightened to the correct torque **20 N.m**.

❑ Angle tighten in order the **new cylinder head bolts (240° ± 6°)**.

Note:
Do not retighten the cylinder head bolts after applying this procedure.

III - FINAL OPERATION

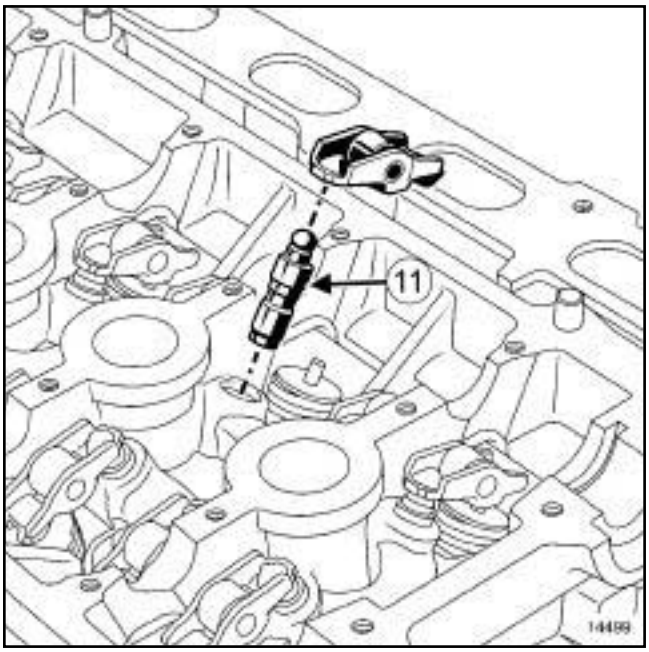

14499

❑

Note:
Because this engine is equipped with hydraulic tappets, there is no valve clearance adjustment.

❑ Reprime the hydraulic tappets (hydraulic tappets may empty after a long down time).

❑ To check if repriming is necessary, press the top of the tappet (**11**) with your thumb.

❑ If the tappet piston sinks, dip the tappet in a container filled with diesel.

❑ Press on the top of the tappet to expel air bubbles.

❑ Refit:

- the hydraulic thrust bearings,
- the valve rockers.

K4M, and 848

❑ Fit the engine wiring channel.

❑ Refit the bolts of the engine wiring channel.

❑ Connect the crankshaft position sensor connector.

❑ Clip on the wiring of the injector holder shim.

❑ Connect:

- the upstream oxygen sensor connector,

K4M

- the coolant temperature sensor connector,
- the hose to the heater matrix,
- the top hose to the water chamber.

❑ Using the **(Mot. 1448)** or **(Mot. 1202-01)** or **(Mot. 1202-02)** fit:

- the clip on the heater matrix hose,
- the top hose clip on the water chamber.

❑ Refit:

- the injector rail (see **17B**, **Petrol injection**, **Injector rail - Injectors: Removal - Refitting**, page **17B-19**) ,
- the camshafts (see **11A**, **Top and front of engine**, **Camshaft: Removal - Refitting**, page **11A-114**) ,
- the rocker cover (see **11A**, **Top and front of engine**, **Rocker cover: Removal - Refitting**, page **11A-88**) ,
- the oil separator (see **11A**, **Top and front of engine**, **Oil decanter: Removal - Refitting**, page **11A-205**) .

K4M, and 858 or 866

❑ Refit:

- the camshaft dephaser (see **11A**, **Top and front of engine**, **Camshaft dephaser: Removal - Refitting**, page **11A-177**) ,
- the camshaft dephaser solenoid valve (see **11A**, **Top and front of engine**, **Camshaft dephaser solenoid valve: Removal - Refitting**, page **11A-184**) ,
- the camshaft position sensor (see **17B**, **Petrol injection**, **Camshaft position sensor: Removal - Refitting**, page **17B-13**) .

❑ Refit:

- the camshaft seals (see **11A**, **Top and front of engine**, **Camshaft seal at timing end: Removal - Refitting**, page **11A-186**) ,
- the lifting eye.

❑ Torque tighten the **lifting eye bolts (10 N.m)**.

❑ Fit the engine wiring on the lifting eye.

K4M, and 848

❑ Refit the dipstick guide.

❑ Torque tighten the **dipstick guide tube bolt (10 N.m)**.

❑ Clip the wiring onto the lifting eye.

❑ Refit:

- the spark plugs (see **17A**, **Ignition**, **Spark plugs: Removal - Refitting**, page **17A-5**) ,
- the ignition coils (see **17A**, **Ignition**, **Coils Removal - Refitting**, page **17A-1**) ,
- the inlet manifold (see **12A**, **Fuel mixture**, **Inlet manifold: Removal - Refitting**, page **12A-23**) ,
- the timing belt (see **11A**, **Top and front of engine**, **Timing belt: Removal - Refitting**, page **11A-29**) ,
- the exhaust manifold stay,
- a new ring between the exhaust manifold and the catalytic converter,
- the exhaust bracket,
- the crankshaft accessories pulley (see **11A**, **Top and front of engine**, **Crankshaft accessories pulley: Removal - Refitting**, page **11A-15**) ,
- the right-hand suspended engine mounting (see **19D**, **Engine mounting**, **Right-hand suspended engine mounting: Removal - Refitting**, page **19D-18**) ,
- the accessories belt (see **11A**, **Top and front of engine**, **Accessories belt: Removal - Refitting**, page **11A-7**) ,
- the lower engine tie-bar (see **19D**, **Engine mounting**, **Lower engine tie-bar: Removal - Refitting**, page **19D-33**) ,
- the front bumper (see **Front bumper: Removal - Refitting**) (55A, Exterior protection),
- the engine undertray,
- the front section of the front wheel arch liners (see **Front wheel arch liner: Removal - Refitting**) (55A, Exterior protection),
- the front wheels (see **Wheel: Removal - Refitting**) (35A, Wheels and tyres),
- the scoop under the scuttle panel grille (see **Scoop under scuttle panel grille: Removal - Refitting**) (56A, Exterior equipment),

K4M

- the scuttle panel grille (see **Scuttle panel grille: Removal - Refitting**) (56A, Exterior equipment),
- the windscreen wiper arms (see **Windscreen wiper arm: Removal - Refitting**) (85A, Wiping - Washing),
- the throttle valve (see **12A**, **Fuel mixture**, **Throttle valve: Removal - Refitting**, page **12A-17**) ,
- the engine cover.

❑ Connect the battery (see **Battery: Removal - Refitting**) (80A, Battery).

❑ Fill and bleed the cooling system (see **19A**, **Cooling**, **Cooling circuit: Draining - Refilling**, page **19A-17**) .

K4M, and 858 or 866

Essential special tooling	
Mot. 1490-01	Locking and adjusting camshaft pulleys.

Tightening torques ▽	
new nut on the exhaust camshaft pulley	**30 N.m + 84°**
new bolt on the camshaft dephaser	**100 N.m**

REMOVAL

I - REMOVAL PREPARATION OPERATION

❑ Position the vehicle on a two-post lift (see **Vehicle: Towing and lifting**) (02A, Lifting equipment).

❑ Disconnect the battery (see **Battery: Removal - Refitting**) (80A, Battery).

❑ Remove:

- the engine cover,
- the throttle valve (see **12A**, **Fuel mixture**, **Throttle valve: Removal - Refitting**, page **12A-17**) ,
- the windscreen wiper arms (see **Windscreen wiper arm: Removal - Refitting**) (85A, Wiping - Washing),
- the scuttle panel grille (see **Scuttle panel grille: Removal - Refitting**) (56A, Exterior equipment),
- the scoop under the scuttle panel grille (see **Scoop under scuttle panel grille: Removal - Refitting**) (56A, Exterior equipment),
- the front right-hand wheel (see **Wheel: Removal - Refitting**) (35A, Wheels and tyres),
- the front section of the front right-hand wheel arch liner (see **Front wheel arch liner: Removal - Refitting**) (55A, Exterior protection),
- the engine undertray bolts,
- the engine undertray,
- the lower engine tie-bar (see **19D**, **Engine mounting**, **Lower engine tie-bar: Removal - Refitting**, page **19D-33**) ,
- the accessories belt (see **11A**, **Top and front of engine**, **Accessories belt: Removal - Refitting**, page **11A-7**) ,
- the right-hand suspended engine mounting (see **19D**, **Engine mounting**, **Right-hand suspended engine mounting: Removal - Refitting**, page **19D-18**) ,
- the crankshaft accessories pulley (see **11A**, **Top and front of engine**, **Crankshaft accessories pulley: Removal - Refitting**, page **11A-15**) ,
- the timing belt (see **11A**, **Top and front of engine**, **Timing belt: Removal - Refitting**, page **11A-29**) .

II - OPERATION FOR REMOVAL OF PART CONCERNED

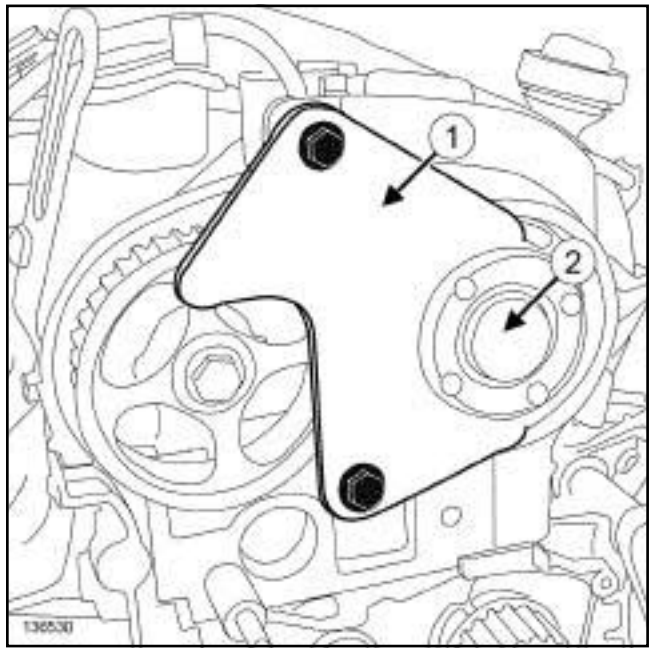

136530

❑ Position the tool **(Mot. 1490-01)** (**1**) on the camshaft pulleys.

❑ Remove the camshaft dephaser blanking cover (**2**) .

K4M, and 858 or 866

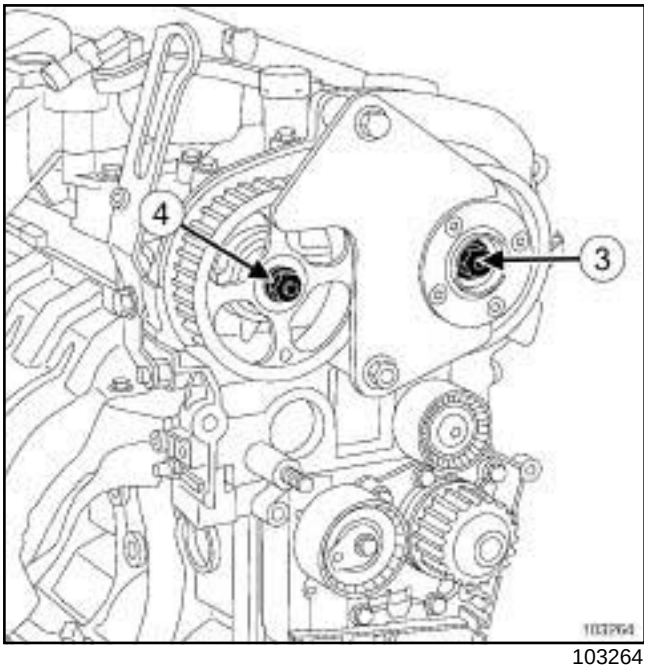

103264

❑ Undo:

- the camshaft dephaser bolt (**3**) ,
- the exhaust camshaft sprocket nut (**4**) .

❑ Remove the tool **(Mot. 1490-01)** from the camshaft pulleys.

❑ Remove:

- the exhaust camshaft pulley nut,
- the exhaust camshaft pulley.
- the camshaft dephaser bolt,
- the camshaft dephaser.

REFITTING

I - REFITTING PREPARATION OPERATION

❑ **parts always to be replaced: Camshaft dephaser sprocket bolt (10,02,02,06)**.

❑ **parts always to be replaced: Exhaust camshaft pulley nut (10,02,02,13)**.

> **WARNING**
> Failure to adhere to the following procedure may cause the timing belt to be incorrectly timed.

❑ If fitting a new camshaft dephaser, check that it is locked by following the procedure described below:

❑ Fit a stud to the camshaft dephaser hub and tighten it.

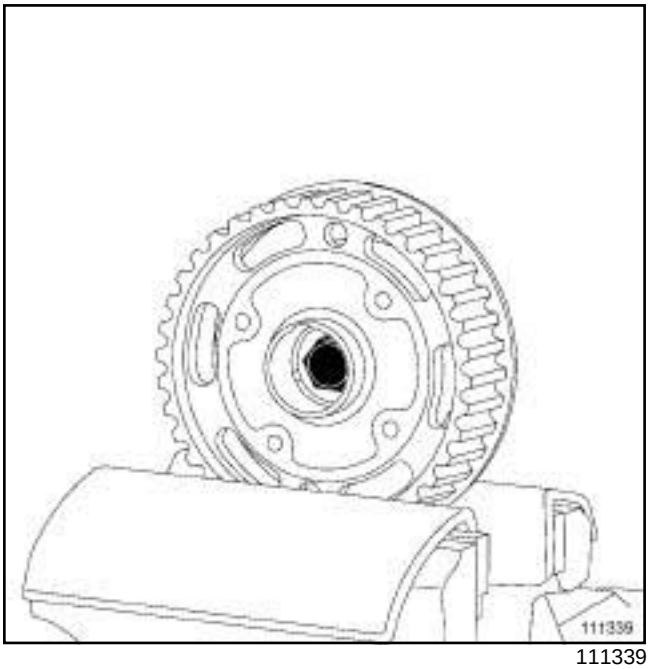
111339

❑ Place the camshaft dephaser in a vice fitted with jaws.

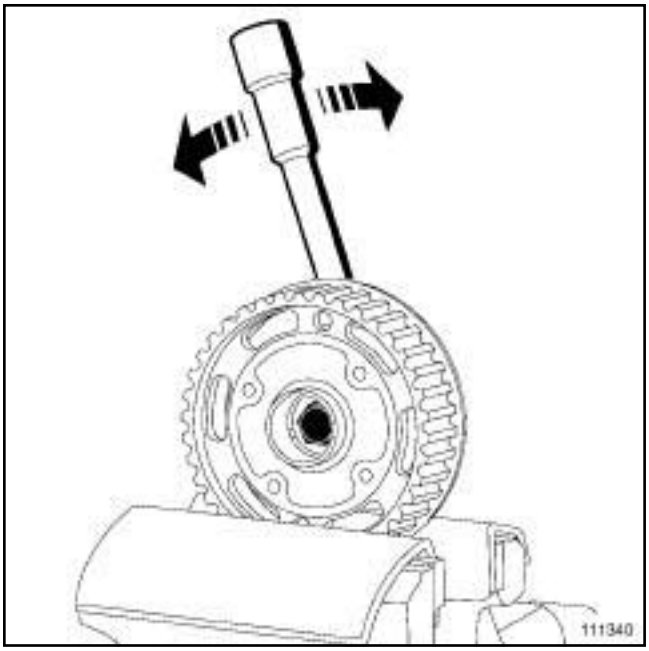
111340

❑ Mechanically lock the camshaft dephaser by rotating it to the left or right using a tubular hexagon box spanner.

❑ Check that the camshaft dephaser is correctly locked (no rotation of the hub in relation to the wheel to the left or right).

❑ If there is a rotation of the hub in relation to the wheel, the camshaft dephaser is faulty and must be replaced.

K4M, and 858 or 866

❏ Degrease the end of the camshaft (timing end) and clean the bores and bearing faces of the camshaft dephaser.

II - REFITTING OPERATION FOR PART CONCERNED

❏ Refit:

- the exhaust camshaft pulley.
- the camshaft dephaser,
- a new nut on the exhaust camshaft pulley,
- a new bolt on the camshaft dephaser.

❏ Position the tool **(Mot. 1490-01)** on the camshaft pulleys.

❏ Tighten to torque:

- the **new nut on the exhaust camshaft pulley (30 N.m + 84°)**,
- the **new bolt on the camshaft dephaser (100 N.m)**.

❏ Refit the blanking cover on the camshaft dephaser.

❏ Remove the tool **(Mot. 1490-01)** from the camshaft pulleys.

III - FINAL OPERATION

❏ Refit:

- the timing belt (see **11A**, **Top and front of engine**, **Timing belt: Removal - Refitting**, page **11A-29**) ,
- the crankshaft accessories pulley (see **11A**, **Top and front of engine**, **Crankshaft accessories pulley: Removal - Refitting**, page **11A-15**) ,
- the right-hand suspended engine mounting (see **19D**, **Engine mounting**, **Right-hand suspended engine mounting: Removal - Refitting**, page **19D-18**) ,
- the accessories belt (see **11A**, **Top and front of engine**, **Accessories belt: Removal - Refitting**, page **11A-7**) ,
- the lower engine tie-bar (see **19D**, **Engine mounting**, **Lower engine tie-bar: Removal - Refitting**, page **19D-33**) ,
- the engine undertray,
- the front section of the front right-hand wheel arch liner (see **Front wheel arch liner: Removal - Refitting**) (55A, Exterior protection),
- the front right-hand wheel (see **Wheel: Removal - Refitting**) (35A, Wheels and tyres),
- the scoop under the scuttle panel grille (see **Scoop under scuttle panel grille: Removal - Refitting**) (56A, Exterior equipment),
- the scuttle panel grille (see **Scuttle panel grille: Removal - Refitting**) (56A, Exterior equipment),
- the windscreen wiper arms (see **Windscreen wiper arm: Removal - Refitting**) (85A, Wiping - Washing),
- the throttle valve (see **12A**, **Fuel mixture**, **Throttle valve: Removal - Refitting**, page **12A-17**) ,
- the engine cover.

❏ Connect the battery (see **Battery: Removal - Refitting**) (80A, Battery).

F4R

Essential special tooling	
Mot. 1801	Camshaft sprocket locking tool - F4 engine.

Tightening torques ▽	
camshaft dephaser bolt	**100 N.m**
new blanking cover on the camshaft dephaser	**15 N.m**

REMOVAL

I - REMOVAL PREPARATION OPERATION

❑ Position the vehicle on a two-post lift (see **Vehicle: Towing and lifting**) (02A, Lifting equipment).

❑ Remove:

- the engine cover,
- the battery (see **Battery: Removal - Refitting**) (80A, Battery),
- the battery tray (see **Battery tray: Removal - Refitting**) (80A, Battery),
- the engine undertray bolts,
- the engine undertray,
- the front wheels (see **Wheel: Removal - Refitting**) (35A, Wheels and tyres),
- the front section of the front wheel arch liners (see **Front wheel arch liner: Removal - Refitting**) (55A, Exterior protection),
- the front bumper (see **Front bumper: Removal - Refitting**) (55A, Exterior protection),
- the radiator mounting cross member (see **Radiator support cross member: Removal - Refitting**) (31A, Front axle components),
- the accessories belt (see **11A**, **Top and front of engine**, **Accessories belt: Removal - Refitting**, page **11A-7**) ,
- the crankshaft accessories pulley (see **11A**, **Top and front of engine**, **Crankshaft accessories pulley: Removal - Refitting**, page **11A-15**) ,
- the lower engine tie-bar (see **19D**, **Engine mounting**, **Lower engine tie-bar: Removal - Refitting**, page **19D-33**) ,
- the windscreen wiper arms (see **Windscreen wiper arm: Removal - Refitting**) (85A, Wiping - Washing),
- the scuttle panel grille (see **Scuttle panel grille: Removal - Refitting**) (56A, Exterior equipment),
- the scoop under the scuttle panel grille (see **Scoop under scuttle panel grille: Removal - Refitting**) (56A, Exterior equipment),
- the right-hand suspended engine mounting (see **19D**, **Engine mounting**, **Right-hand suspended engine mounting: Removal - Refitting**, page **19D-18**) ,
- the timing belt (see **11A**, **Top and front of engine**, **Timing belt: Removal - Refitting**, page **11A-29**) .

II - OPERATION FOR REMOVAL OF PART CONCERNED

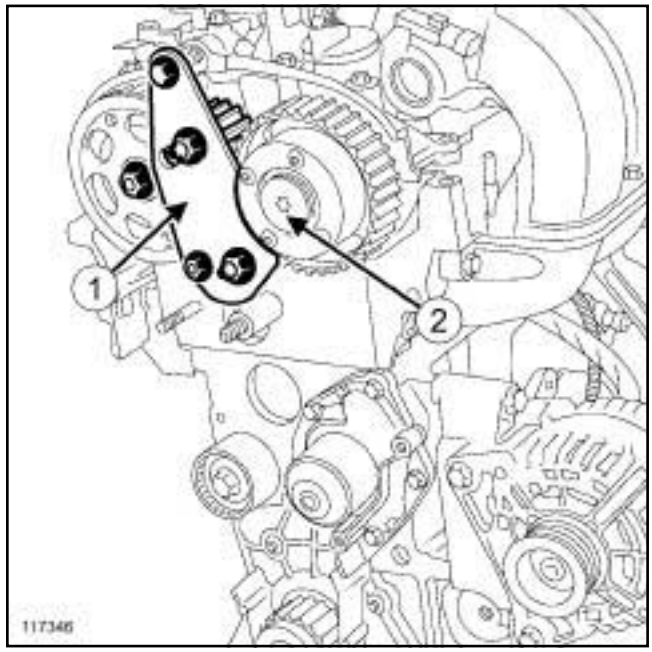

117346

❑ Position the **(Mot. 1801)** (**1**) .

❑ Remove the camshaft dephaser blanking cover (**2**) .

F4R

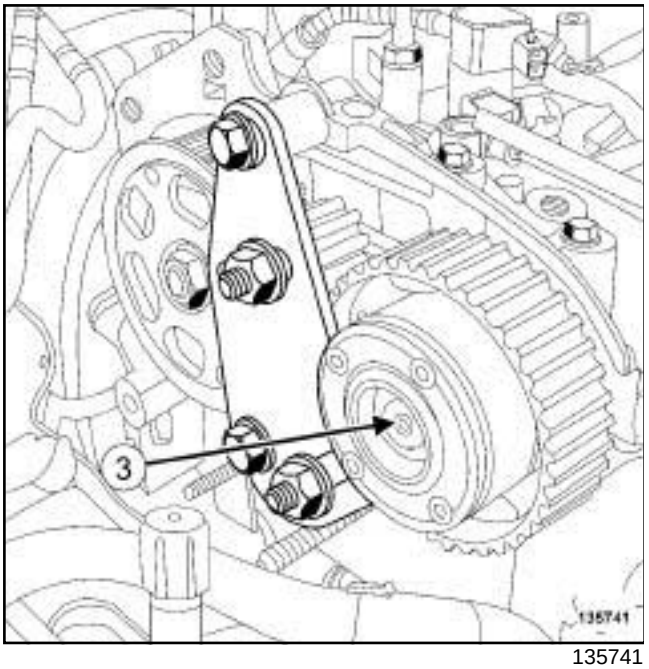

135741

❑ Remove:

- the camshaft dephaser bolt (**3**) ,
- the **(Mot. 1801)**,
- the inlet camshaft dephaser.

REFITTING

I - REFITTING PREPARATION OPERATION

❑ **parts always to be replaced: Camshaft dephaser sprocket bolt (10,02,02,19)**.

❑ **parts always to be replaced: camshaft dephaser sprocket blanking cover (10,02,02,20)**.

❑

WARNING

Always degrease:

- the end of the crankshaft (timing end),
- the timing sprocket bore and bearing faces,
- the crankshaft accessories pulley bearing faces,
- the camshaft ends (timing end),
- the camshaft sprocket bores and bearing faces.

This is to avoid timing slippage.

This slippage leads to engine damage.

Note:

Failure to adhere to the following procedure may cause the timing belt to be incorrectly timed.

❑ If fitting a new inlet camshaft dephaser, check that it is locked by following the procedure described below.

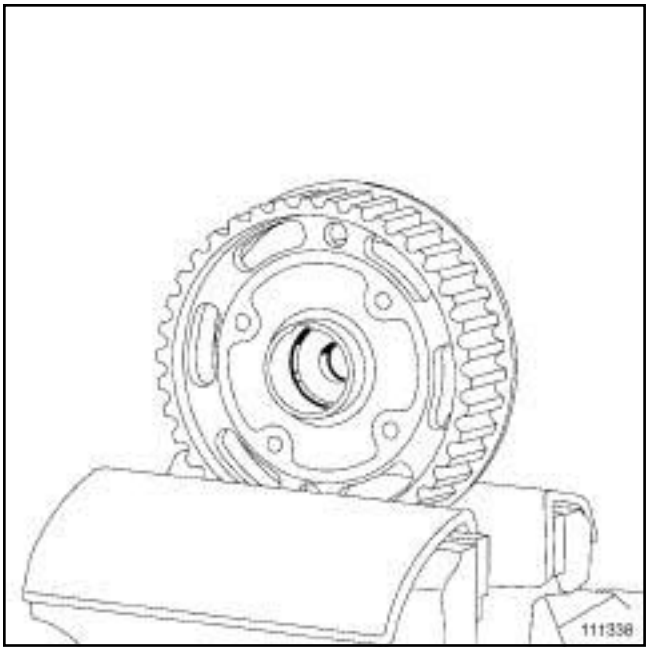

111338

❑ Fit the camshaft dephaser into a vice with jaws.

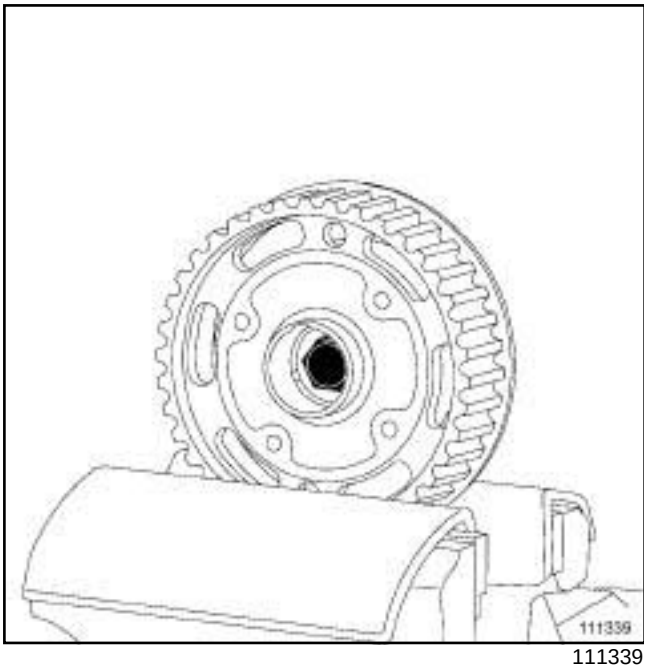

111339

❑ Fit a stud on the camshaft dephaser hub.

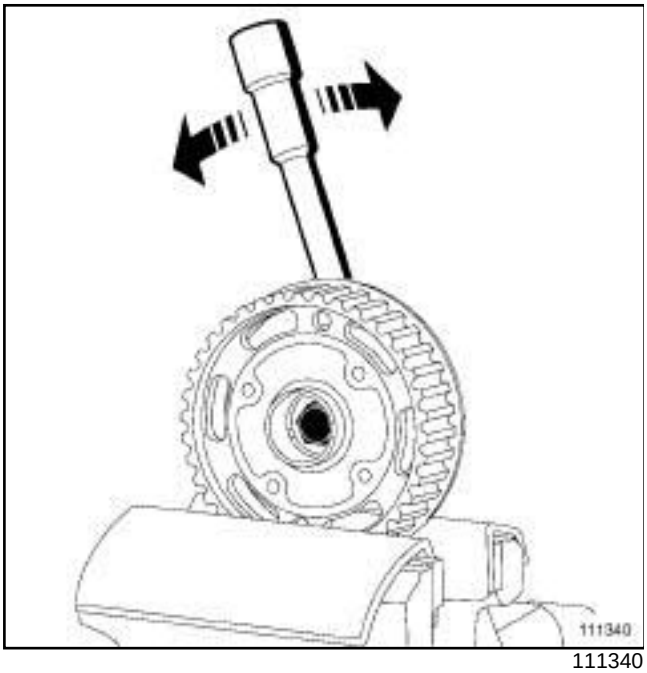

111340

❑ Check that the camshaft dephaser hub is correctly mechanically secured using a tubular hexagon box spanner (the hub must not be able to rotate to the left or right).

II - REFITTING OPERATION FOR PART CONCERNED

❑ Refit:

- the camshaft dephaser,
- the camshaft dephaser bolt.

❑ Position the **(Mot. 1801)**.

❑ Torque tighten the **camshaft dephaser bolt (100 N.m)**.

❑ Fit a new blanking cover on the camshaft dephaser.

❑ Torque tighten the **new blanking cover on the camshaft dephaser (15 N.m)**.

❑ Remove the **(Mot. 1801)**.

III - FINAL OPERATION

❑ Refit:

- the timing belt (see **11A**, **Top and front of engine**, **Timing belt: Removal - Refitting**, page **11A-29**) ,
- the right-hand suspended engine mounting (see **19D**, **Engine mounting**, **Right-hand suspended engine mounting: Removal - Refitting**, page **19D-18**) ,
- the scoop under the scuttle panel grille (see **Scoop under scuttle panel grille: Removal - Refitting**) (56A, Exterior equipment),
- the scuttle panel grille (see **Scuttle panel grille: Removal - Refitting**) (56A, Exterior equipment),
- the windscreen wiper arms (see **Windscreen wiper arm: Removal - Refitting**) (85A, Wiping - Washing),
- the engine tie-bar (see **19D**, **Engine mounting**, **Lower engine tie-bar: Removal - Refitting**, page **19D-33**) ,
- the crankshaft accessories pulley (see **11A**, **Top and front of engine**, **Crankshaft accessories pulley: Removal - Refitting**, page **11A-15**) ,
- the accessories belt (see **11A**, **Top and front of engine**, **Accessories belt: Removal - Refitting**, page **11A-7**) ,
- the radiator mounting cross member (see **Radiator support cross member: Removal - Refitting**) (31A, Front axle components),
- the front bumper (see **Front bumper: Removal - Refitting**) (55A, Exterior protection),
- the front section of the front wheel arch liners (see **Front wheel arch liner: Removal - Refitting**) (55A, Exterior protection),
- the front wheels (see **Wheel: Removal - Refitting**) (35A, Wheels and tyres),
- the engine undertray,
- the battery tray (see **Battery tray: Removal - Refitting**) (80A, Battery),

F4R

- the battery (see **Battery: Removal - Refitting**) (80A, Battery),
- the engine cover.

K4M, and 858 or 866

Tightening torques ▽	
camshaft dephaser solenoid valve bolt	**10 N.m**

REMOVAL

I - REMOVAL PREPARATION OPERATION

❑ Remove the front engine cover.

II - OPERATION FOR REMOVAL OF PART CONCERNED

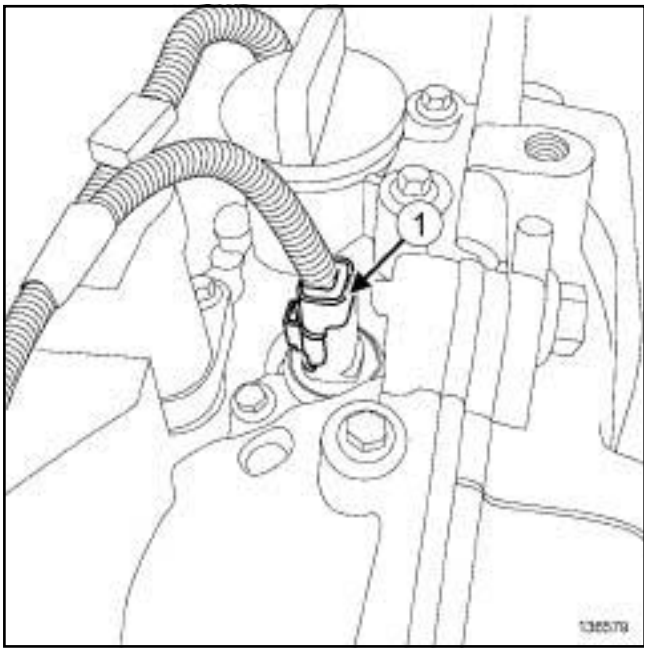

136579

❑ Disconnect the connector (**1**) from the camshaft dephaser solenoid valve.

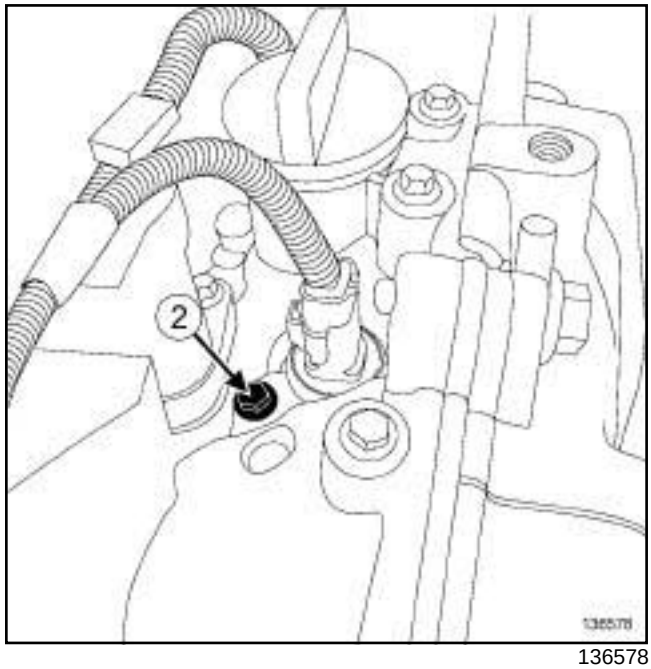

136578

❑ Remove:

- the bolt (**2**) from the camshaft dephaser solenoid valve,
- the camshaft dephaser solenoid valve.

REFITTING

I - REFITTING OPERATION FOR PART CONCERNED

❑ Refit the camshaft dephaser solenoid valve.

❑ Torque tighten the **camshaft dephaser solenoid valve bolt (10 N.m)**.

❑ Connect the camshaft dephaser solenoid valve connector.

II - FINAL OPERATION

❑ Refit the engine cover.

F4R

Tightening torques ▽	
camshaft dephaser solenoid valve bolt	**10 N.m**

REMOVAL

I - REMOVAL PREPARATION OPERATION

❏ Remove the front engine cover.

II - OPERATION FOR REMOVAL OF PART CONCERNED

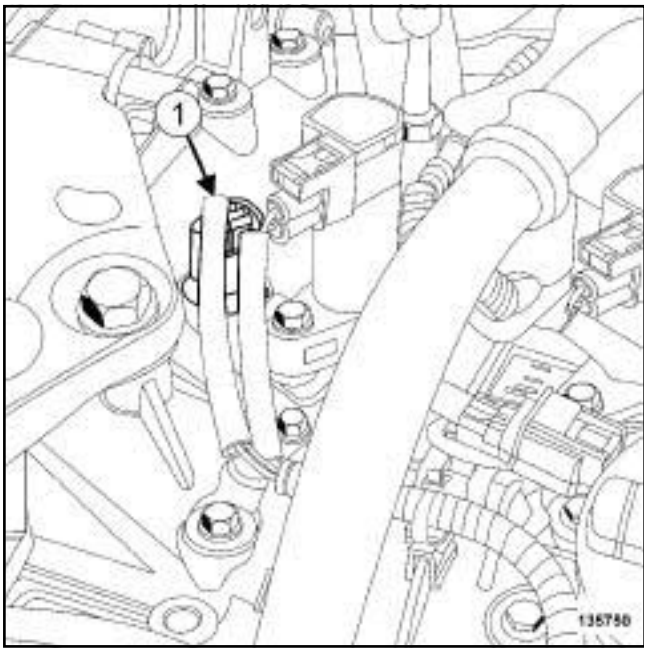

135750

❏ Disconnect the connector (**1**) from the camshaft dephaser solenoid valve.

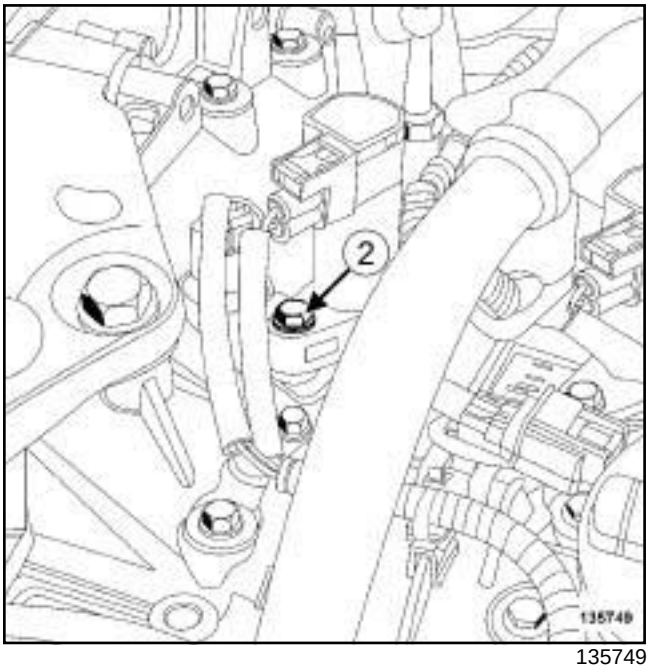

135749

❏ Remove the bolt (**2**) of the camshaft dephaser solenoid valve.

❏ Move aside the coil of cylinder no. 4.

❏ Remove the camshaft dephaser solenoid valve.

REFITTING

I - REFITTING OPERATION FOR PART CONCERNED

❏ Refit the camshaft dephaser solenoid valve.

❏ Torque tighten the **camshaft dephaser solenoid valve bolt (10 N.m)**.

❏ Connect the camshaft dephaser solenoid valve connector.

II - FINAL OPERATION

❏ Refit the engine cover.

K4M

Essential special tooling	
Mot. 1490-01	Locking and adjusting camshaft pulleys.
Mot. 1577	Lip seal extractor (shaft diameter 28 mm to 42 mm).
Mot. 1632	Tool for fitting PTFE camshaft seal

Tightening torques ▽	
new nut on the exhaust camshaft sprocket	**30 N.m + 84°**
new nut on the inlet camshaft sprocket	**30 N.m + 84°**
new camshaft dephaser bolt	**100 N.m**

REMOVAL

I - REMOVAL PREPARATION OPERATION

❑ Position the vehicle on a two-post lift (see **Vehicle: Towing and lifting**) (02A, Lifting equipment).

❑ Disconnect the battery (see **Battery: Removal - Refitting**) (80A, Battery).

❑ Remove:

- the engine cover,
- the throttle valve (see **12A**, **Fuel mixture**, **Throttle valve: Removal - Refitting**, page **12A-17**) ,
- the windscreen wiper arms (see **Windscreen wiper arm: Removal - Refitting**) (85A, Wiping - Washing),
- the scuttle panel grille (see **Scuttle panel grille: Removal - Refitting**) (56A, Exterior equipment),
- the scoop under the scuttle panel grille (see **Scoop under scuttle panel grille: Removal - Refitting**) (56A, Exterior equipment),
- the front right-hand wheel (see **Wheel: Removal - Refitting**) (35A, Wheels and tyres),
- the front section of the front right-hand wheel arch liner (see **Front wheel arch liner: Removal - Refitting**) (55A, Exterior protection),
- the engine undertray bolts,
- the engine undertray,
- the lower engine tie-bar (see **19D**, **Engine mounting**, **Lower engine tie-bar: Removal - Refitting**, page **19D-33**) ,
- the accessories belt (see **11A**, **Top and front of engine**, **Accessories belt: Removal - Refitting**, page **11A-7**) ,
- the right-hand suspended engine mounting (see **19D**, **Engine mounting**, **Right-hand suspended engine mounting: Removal - Refitting**, page **19D-18**) ,
- the crankshaft accessories pulley (see **11A**, **Top and front of engine**, **Crankshaft accessories pulley: Removal - Refitting**, page **11A-15**) ,
- the timing belt (see **11A**, **Top and front of engine**, **Timing belt: Removal - Refitting**, page **11A-29**) ,

II - OPERATION FOR REMOVAL OF PART CONCERNED

❑ Position the tool **(Mot. 1490-01)** on the camshaft sprockets.

K4M, and 848

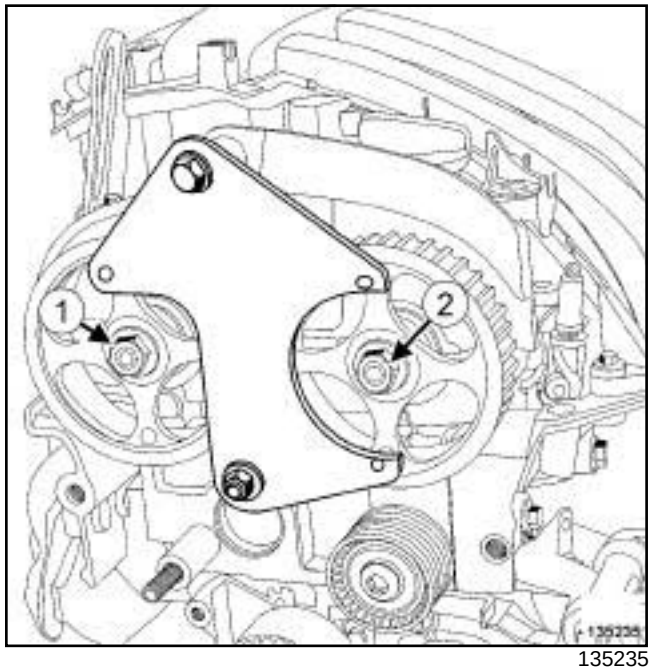

135235

❑ Undo:

- the exhaust camshaft sprocket nut (**1**) ,
- the inlet camshaft sprocket nut (**2**) .

❑ Remove the tool **(Mot. 1490-01)** from the camshaft sprockets.

❑ Remove:

- the exhaust camshaft sprocket nut,

K4M

- the exhaust camshaft sprocket,
- the inlet camshaft sprocket nut,
- the inlet camshaft sprocket.

K4M, and 858 or 866

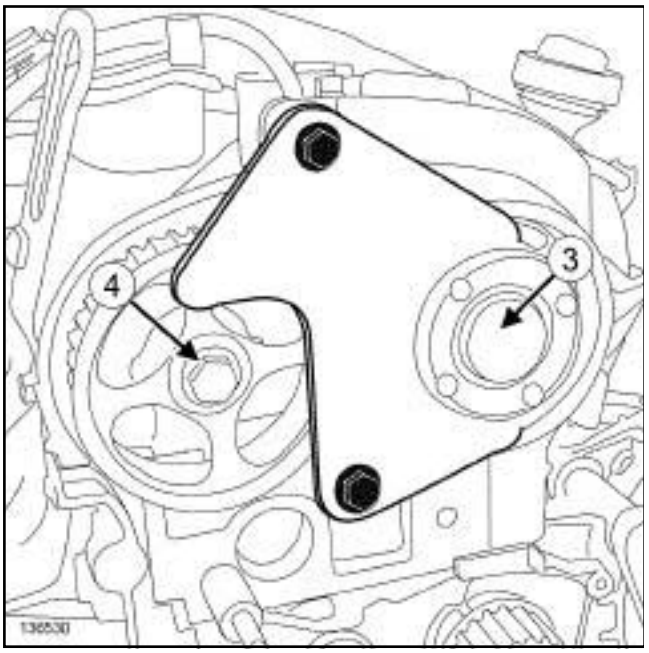

136530

❑ Remove the camshaft dephaser blanking cover (**3**) .

❑ Undo:

- the exhaust camshaft sprocket nut (**4**) ,
- the camshaft dephaser bolt.

❑ Remove the tool **(Mot. 1490-01)** from the camshaft sprockets.

❑ Remove:

- the exhaust camshaft sprocket nut,
- the exhaust camshaft sprocket,
- the camshaft dephaser bolt,
- the camshaft dephaser.

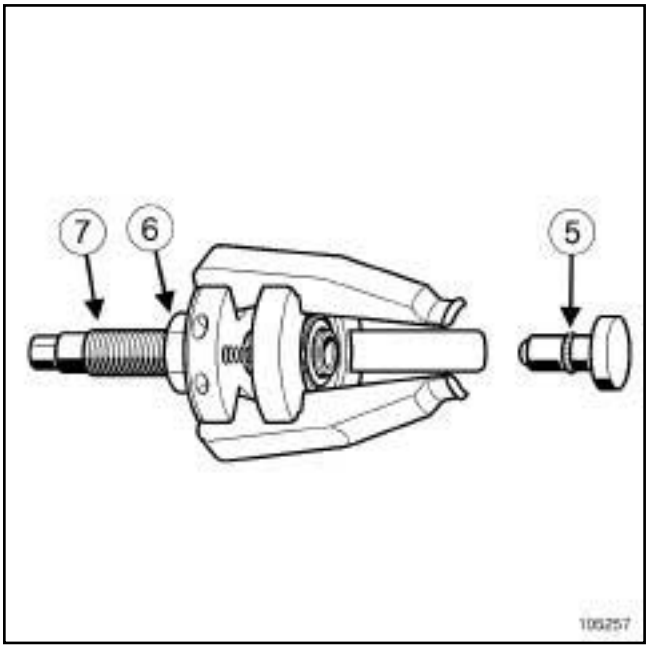

105257

❑

Note:

The camshaft seal is removed from the timing end using the **(Mot. 1577)**.

❑ Always remove the end piece (**5**) of the tool **(Mot. 1577)**.

❑ Completely unscrew the nut (**6**) and the bolt **(Mot. 1577)** of the (**7**) .

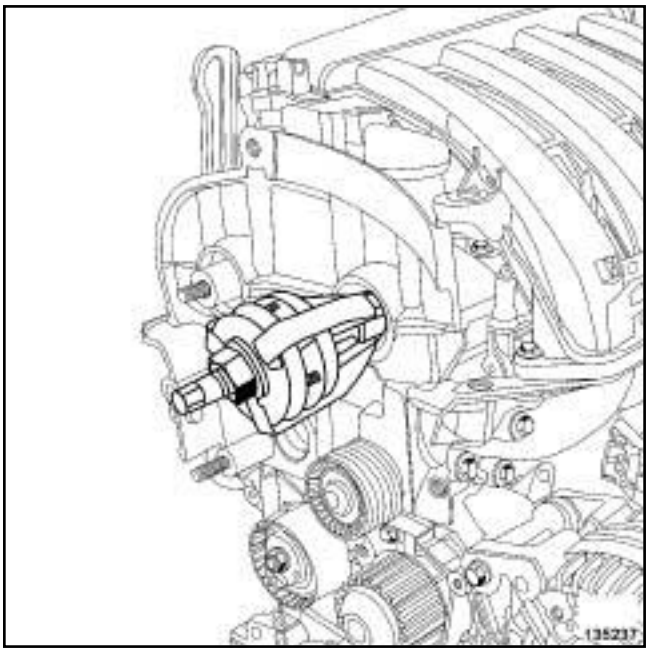

135237

❑ Position the claws of the **(Mot. 1577)** on the camshaft.

K4M

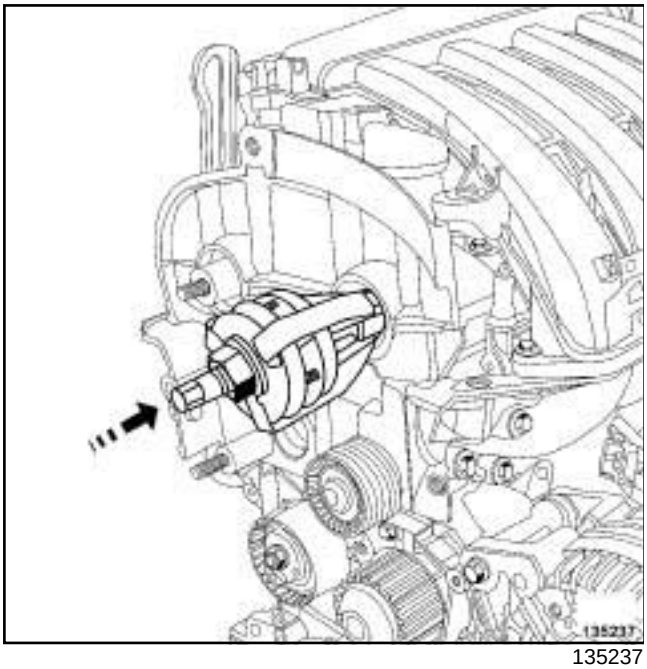

135237

❑ Push the tool **(Mot. 1577)** until contact is made between the ends of the claws and the camshaft seal.

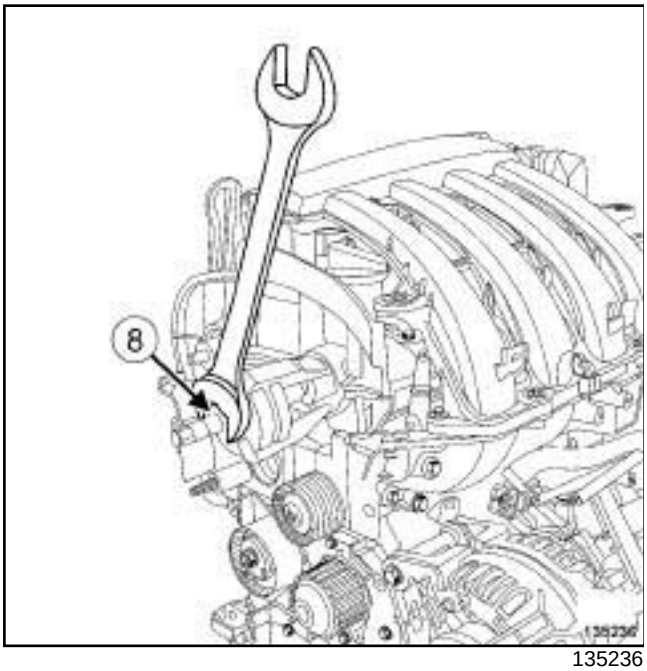

135236

❑ Separate the claws by turning the bolt (**8**) clockwise using an open-jawed spanner.

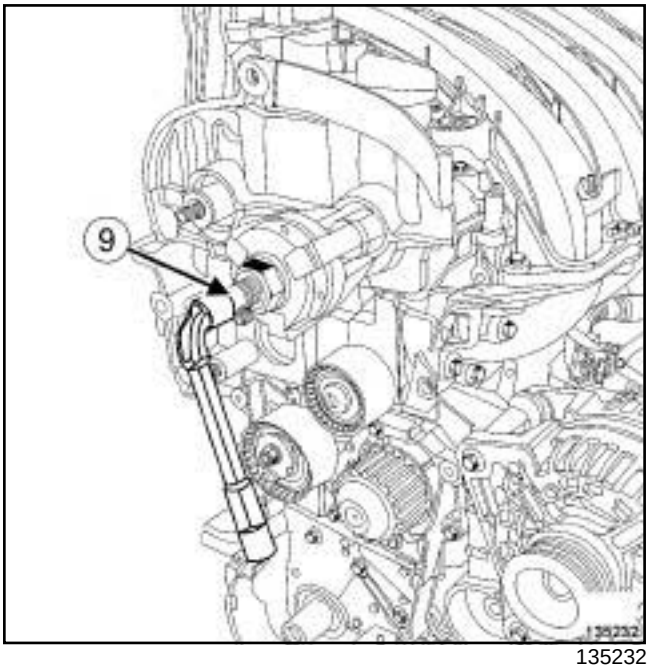

135232

❑ Remove the camshaft seal by turning the bolt (**9**) clockwise.

REFITTING

I - REFITTING PREPARATION OPERATION

❑ **parts always to be replaced: Camshaft seal on timing end (10,02,02,02)**.

❑ **parts always to be replaced: Exhaust camshaft pulley nut (10,02,02,13)**.

K4M, and 848

❑ Always replace the inlet camshaft pulley nut.

K4M, and 858 or 866

❑ **parts always to be replaced: Camshaft dephaser sprocket bolt (10,02,02,06)**.

K4M

❑ Degrease the bearing surfaces of the timing end camshaft seals using **SURFACE CLEANER** (see **Vehicle: Parts and ingredients for the repairwork**) (04B, Consumables - Products):

- the seal mating face of each camshaft,

- the camshaft seal housings.

WARNING
Do not scrape the joint faces of the aluminium, any damage caused to the joint face will result in a risk of leaks.

WARNING
To ensure proper sealing, the gasket surfaces must be clean, dry and not greasy (avoid any finger marks).

II - REFITTING OPERATION FOR PART CONCERNED

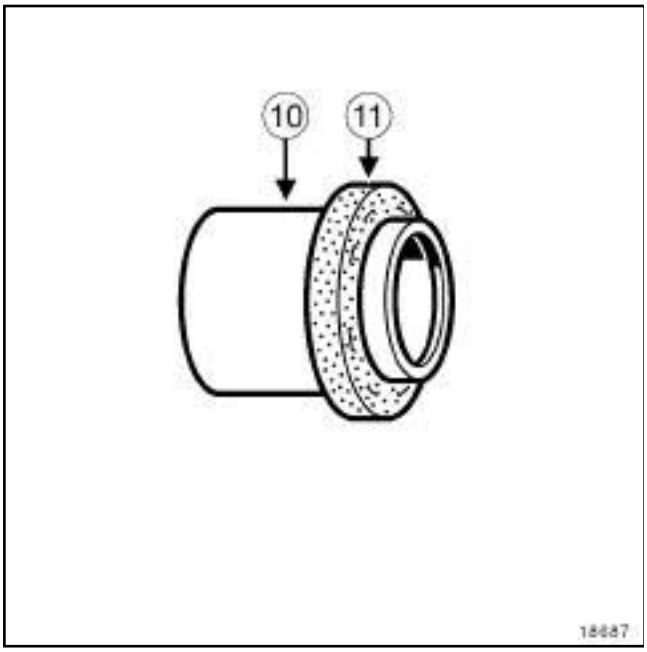

18687

❑

Note:

Always hold the camshaft seal with the protector (**10**) when handling, as this type of seal is very FRAGILE. It is strictly forbidden to touch the seal (**11**) in order to prevent any oil leaks once the camshaft seal is fitted to the engine.

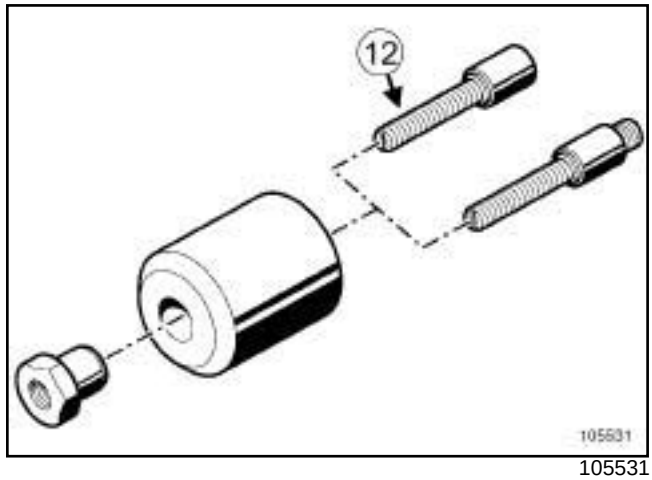

105531

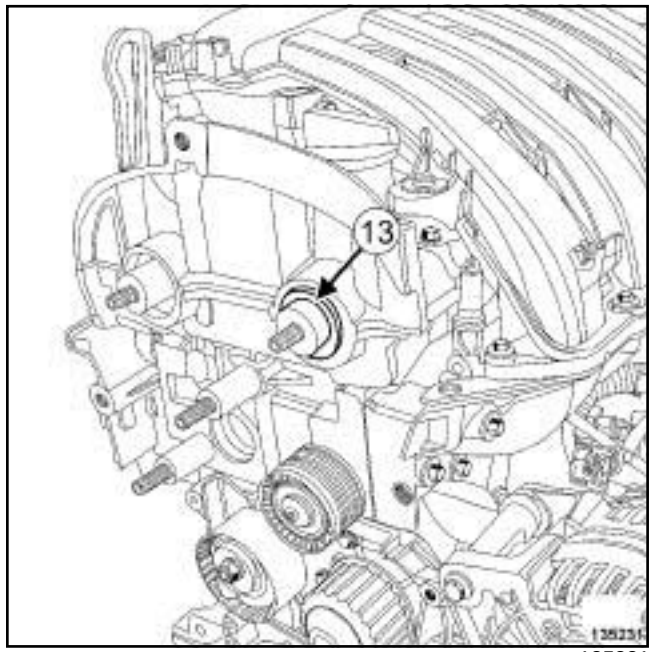

135231

❑ Fit the protector fitted with a new seal (**13**) on the inlet and exhaust camshaft, taking care not to touch the seal.

❑ Screw on the stud (**12**) of the tool **(Mot. 1632)** on the inlet and exhaust camshafts.

K4M

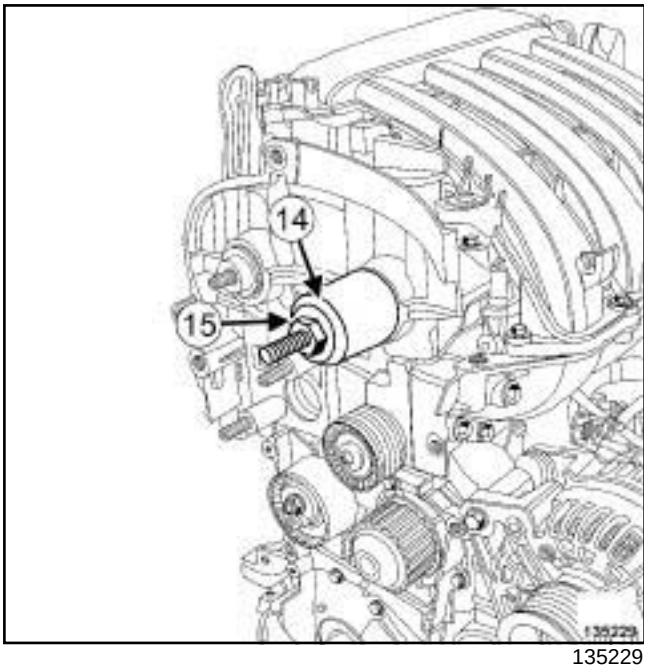

135229

❑ Fit the cover (**14**) and the collar nut (**15**) of the **(Mot. 1632)**.

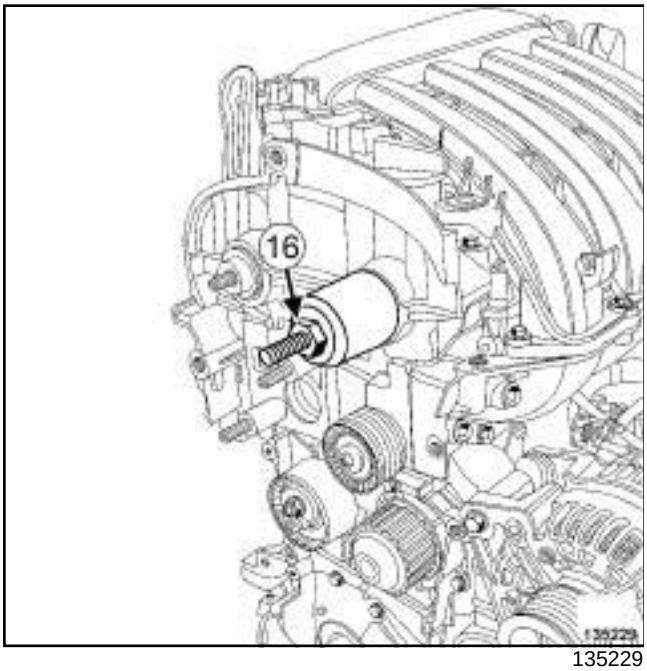

135229

❑ Screw on the collar nut (**16**) until the cover touches the cylinder head.

❑ Remove:

- the collar nut from the **(Mot. 1632)**,
- the cover of the tool **(Mot. 1632)**,
- the stud of the tool **(Mot. 1632)**.

K4M, and 848

❑ Refit:

- the inlet camshaft sprocket,
- a new nut on the inlet camshaft sprocket,
- the exhaust camshaft sprocket,
- a new nut on the exhaust camshaft sprocket,

K4M, and 858 or 866

❑ Refit:

- the camshaft dephaser,
- a new bolt on the camshaft dephaser,
- the exhaust camshaft sprocket,
- a new nut on the exhaust camshaft sprocket,

❑ Position the tool **(Mot. 1490-01)** on the camshaft sprockets.

❑ Torque tighten the **new nut on the exhaust camshaft sprocket (30 N.m + 84°)**.

K4M, and 848

❑ Torque tighten the **new nut on the inlet camshaft sprocket (30 N.m + 84°)**.

K4M, and 858 or 866

❑ Torque tighten the **new camshaft dephaser bolt (100 N.m)**.

❑ Refit the camshaft dephaser blanking cover.

❑ Remove the tool **(Mot. 1490-01)** from the camshaft sprockets.

III - FINAL OPERATION

❑ Refit:

- the timing belt (see **11A**, **Top and front of engine**, **Timing belt: Removal - Refitting**, page **11A-29**) ,

K4M

- the crankshaft accessories pulley (see **11A**, **Top and front of engine**, **Crankshaft accessories pulley: Removal - Refitting**, page **11A-15**) ,
- the right-hand suspended engine mounting (see **19D**, **Engine mounting**, **Right-hand suspended engine mounting: Removal - Refitting**, page **19D-18**) ,
- the accessories belt (see **11A**, **Top and front of engine**, **Accessories belt: Removal - Refitting**, page **11A-7**) ,
- the lower engine tie-bar (see **19D**, **Engine mounting**, **Lower engine tie-bar: Removal - Refitting**, page **19D-33**) ,
- the engine undertray,
- the front section of the front right-hand wheel arch liner (see **Front wheel arch liner: Removal - Refitting**) (55A, Exterior protection),
- the front right-hand wheel (see **Wheel: Removal - Refitting**) (35A, Wheels and tyres),
- the scoop under the scuttle panel grille (see **Scoop under scuttle panel grille: Removal - Refitting**) (56A, Exterior equipment),
- the scuttle panel grille (see **Scuttle panel grille: Removal - Refitting**) (56A, Exterior equipment),
- the windscreen wiper arms (see **Windscreen wiper arm: Removal - Refitting**) (85A, Wiping - Washing),
- the throttle valve (see **12A**, **Fuel mixture**, **Throttle valve: Removal - Refitting**, page **12A-17**) ,
- the engine cover.

❑ Connect the battery (see **Battery: Removal - Refitting**) (80A, Battery).

K9K

Essential special tooling	
Mot. 1606	High pressure pump-pulley retaining tool.
Mot. 1577	Lip seal extractor (shaft diameter 28 mm to 42 mm).
Mot. 1632	Tool for fitting PTFE camshaft seal
Mot. 1430	Set of 5 crankshaft and camshaft pulley timing pins.

Essential equipment
offset spanner

Tightening torques ▽	
camshaft pulley nut	**30 N.m + 86° ± 6°.**

REMOVAL

I - REMOVAL PREPARATION OPERATION

❑ Position the vehicle on a two-post lift (see **Vehicle: Towing and lifting**) (02A, Lifting equipment).

❑ Disconnect the battery (see **Battery: Removal - Refitting**) (80A, Battery).

❑ Remove:

- the engine cover,
- the front right-hand wheel (see **Wheel: Removal - Refitting**) (35A, Wheels and tyres),
- the front section of the front right-hand wheel arch liner (see **Front wheel arch liner: Removal - Refitting**) (55A, Exterior protection),
- the engine undertray bolts,
- the engine undertray,
- the accessories belt (see **11A**, **Top and front of engine**, **Accessories belt: Removal - Refitting**, page **11A-7**)
- the crankshaft accessories pulley (see **11A**, **Top and front of engine**, **Crankshaft accessories pulley: Removal - Refitting**, page **11A-15**) ,
- the windscreen wiper arms (see **Windscreen wiper arm: Removal - Refitting**) (85A, Wiping - Washing),
- the scuttle panel grille (see **Scuttle panel grille: Removal - Refitting**) (56A, Exterior equipment),
- the scoop under the scuttle panel grille (see **Scoop under scuttle panel grille: Removal - Refitting**) (56A, Exterior equipment),
- the right-hand suspended engine mounting (see **19D**, **Engine mounting**, **Right-hand suspended engine mounting: Removal - Refitting**, page **19D-18**) ,
- the timing belt (see **11A**, **Top and front of engine**, **Timing belt: Removal - Refitting**, page **11A-29**) .

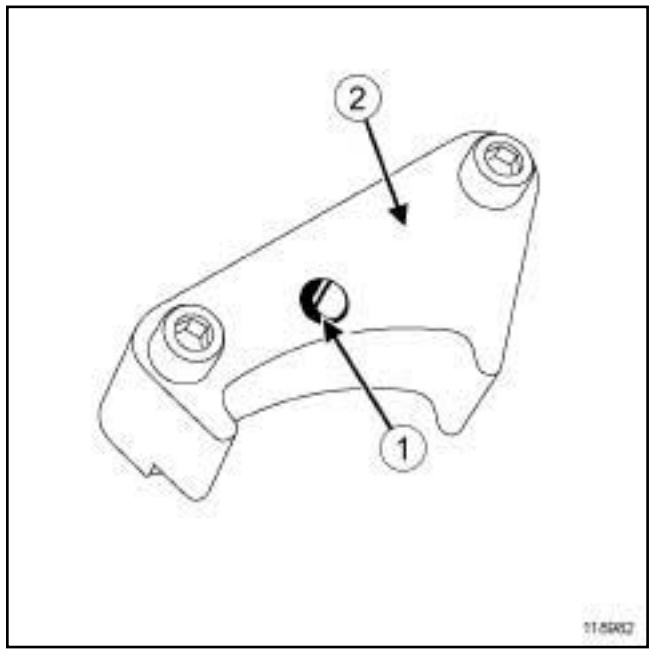

118982

❑ Increase the hole (**1**) of the **(Mot. 1606)** (**2**) using an **8.5 mm** drill bit.

K9K

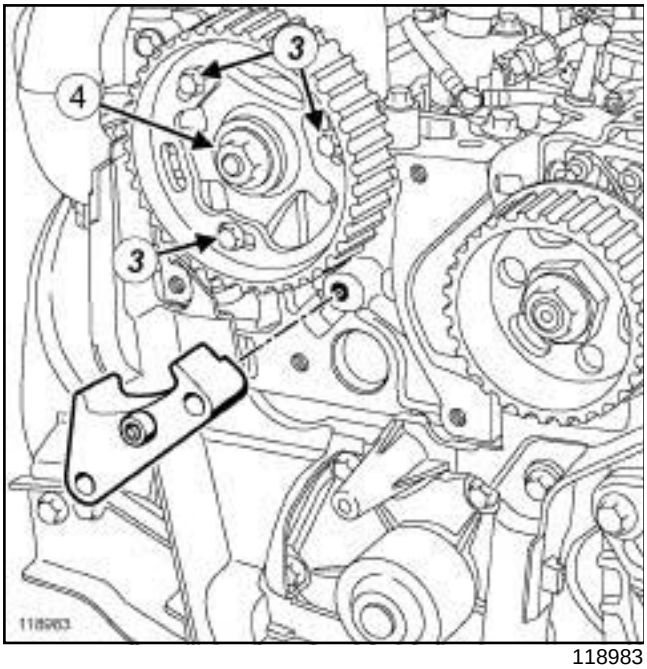

118983

- ❑ Undo the camshaft pulley hub bolts (**3**) .
- ❑ Fit the **(Mot. 1606)** on the cylinder head to lock the camshaft pulley wheel.
- ❑ Tighten the camshaft pulley hub bolts (**3**) .
- ❑ Remove:
  - the nut (**4**) from the camshaft pulley,
  - the **(Mot. 1606)**,
  - the camshaft pulley.

II - OPERATION FOR REMOVAL OF PART CONCERNED

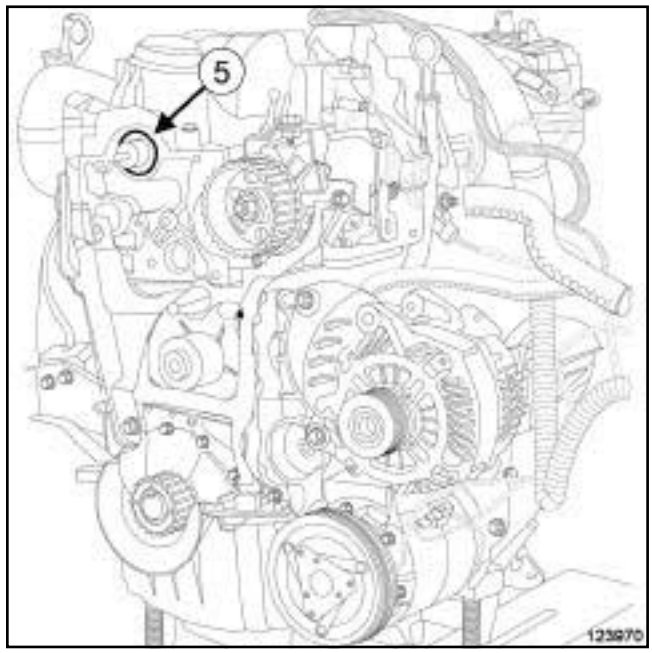

123970

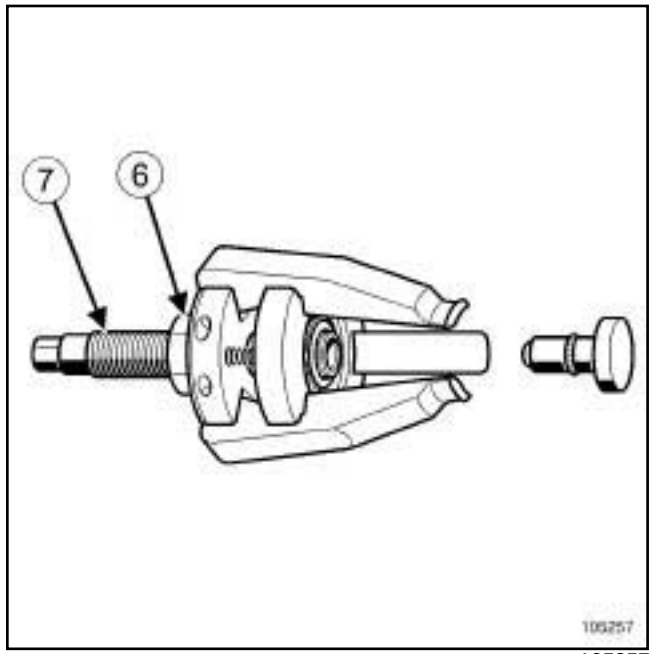

105257

❑

> Note:
>
> The timing end camshaft seal (**5**) is removed using the tool **(Mot. 1577)**.

❑ Loosen bolts (**6**) and (**7**) fully from the **(Mot. 1577)**.

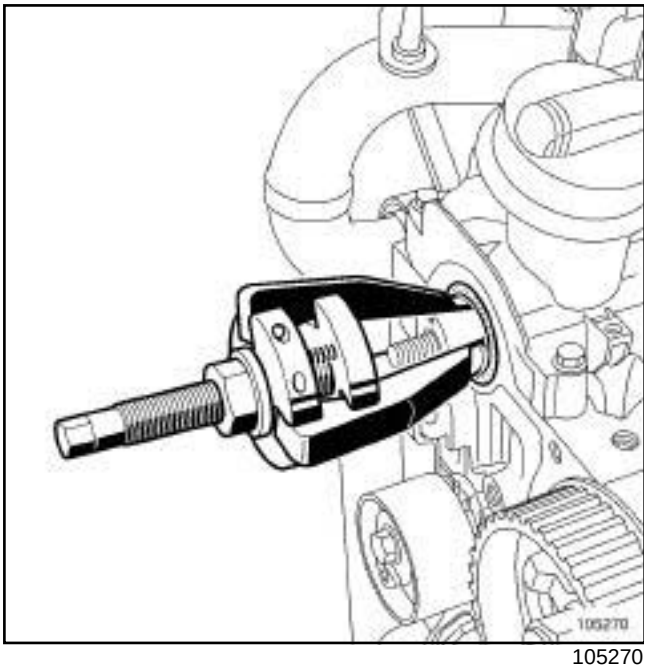

105270

❑ Position the claws of the **(Mot. 1577)** on the camshaft.

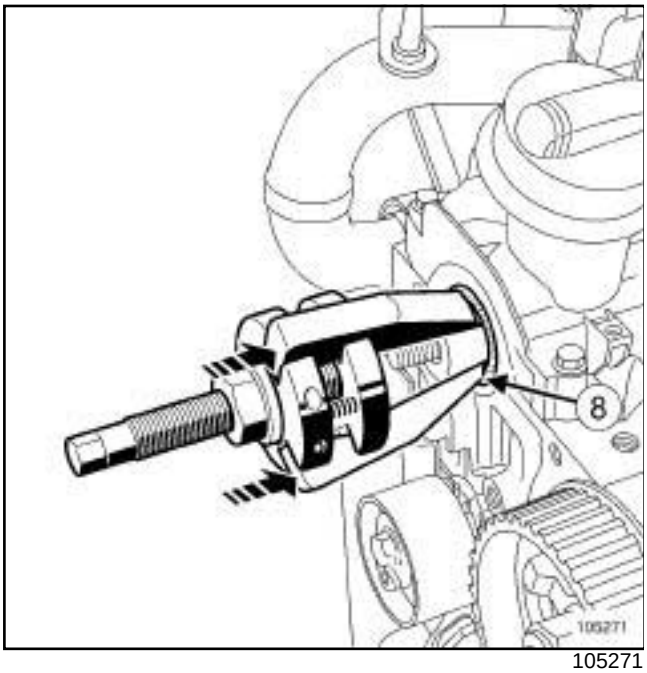

105271

❑ Push the tool **(Mot. 1577)** until contact is made between the ends (**8**) of the claws and the camshaft seal.

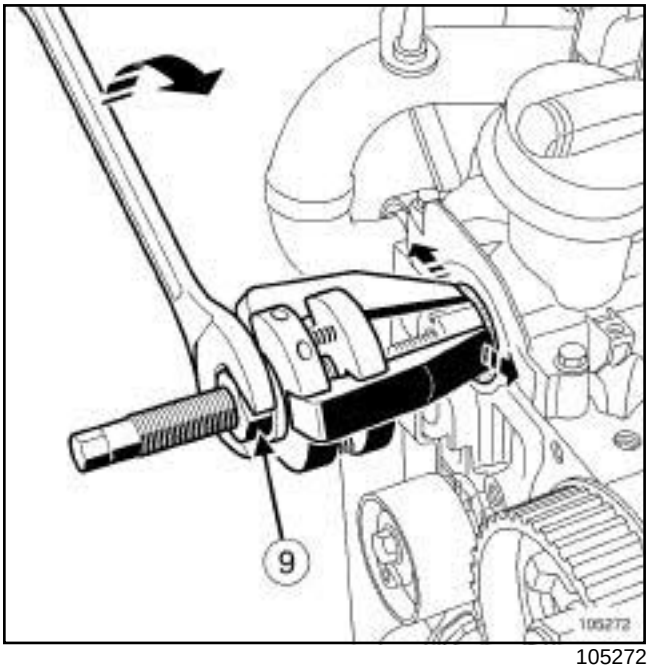

105272

❑ Separate the claws by turning the bolt (**9**) clockwise using an open-jawed spanner.

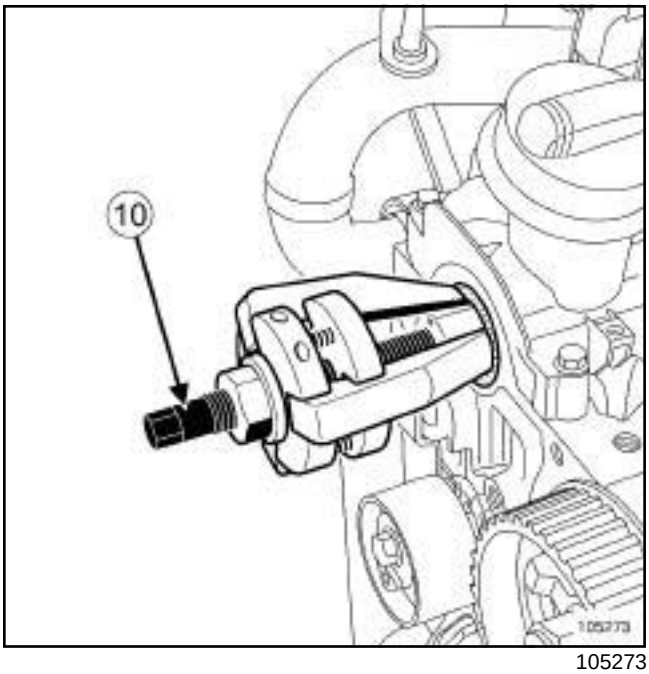

105273

❑ Remove the camshaft seal by turning the bolt (**10**) clockwise.

REFITTING

I - REFITTING PREPARATION OPERATION

❑ **parts always to be replaced: Camshaft seal on timing end (10,02,02,02)**.

K9K

❑ **parts always to be replaced: Camshaft timing sprocket nut (10,02,02,18)**.

> **WARNING**
> Do not scrape the joint faces of the aluminium, any damage caused to the joint face will result in a risk of leaks.

> **WARNING**
> To ensure proper sealing, the gasket surfaces must be clean, dry and not greasy (avoid any finger marks).

❑ Degrease and clean using **SURFACE CLEANER** (see **Vehicle: Parts and ingredients for the repairwork**) (04B, Ingredient - Products) and a **CLEAN CLOTH** :

- the camshaft seal mating face on the camshaft,
- the camshaft seal housing in the cylinder head.

II - REFITTING OPERATION FOR PART CONCERNED

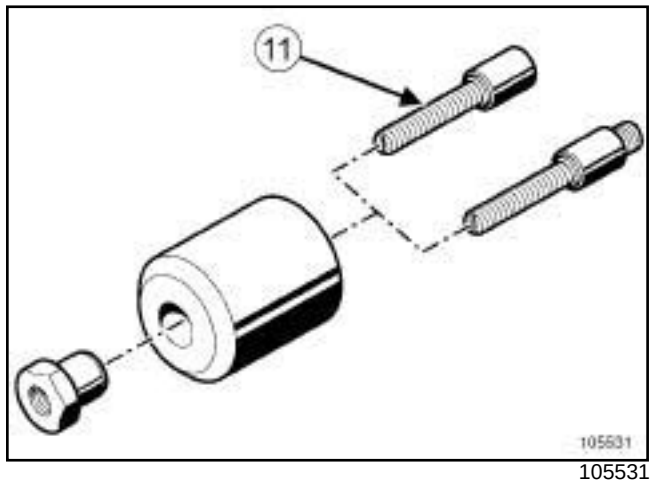

105531

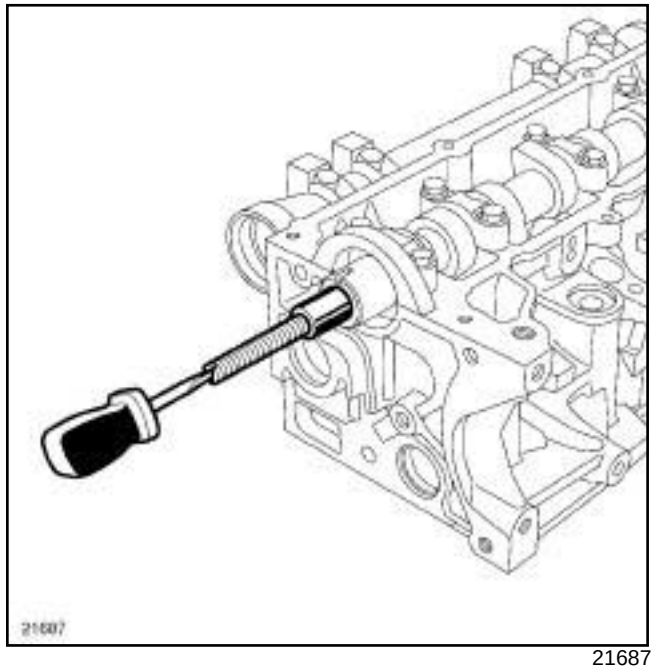

21687

❑ Screw the stud (**11**) of the **(Mot. 1632)** onto the camshaft.

K9K

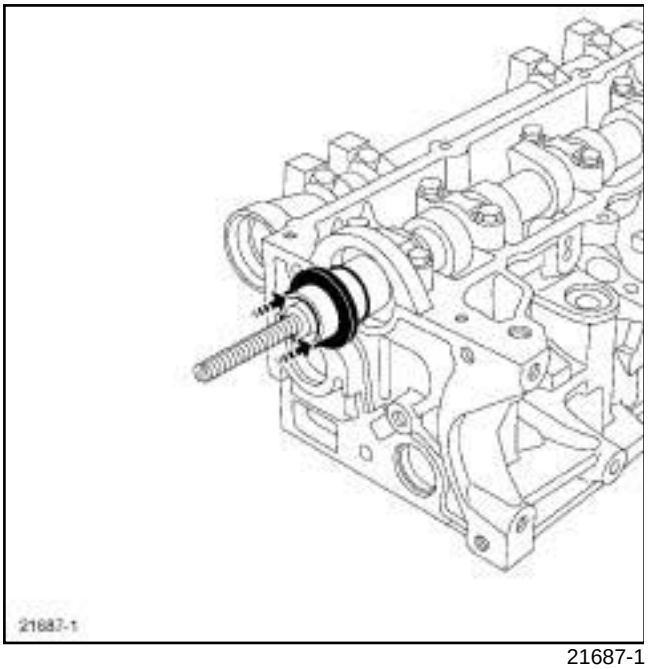

21687-1

❑ Fit a new camshaft seal on the camshaft.

Note:

For camshaft seals delivered fitted to a protective sleeve:

-do not remove the camshaft seal from its protective sleeve,

-fit the sleeve fitted with the camshaft seal on the camshaft,

-push the protective sleeve towards the cylinder head until the camshaft seal is in full contact with the cylinder head,

-fit the seal on the camshaft by following the recommendations below.

1 - First fitting of the camshaft seal

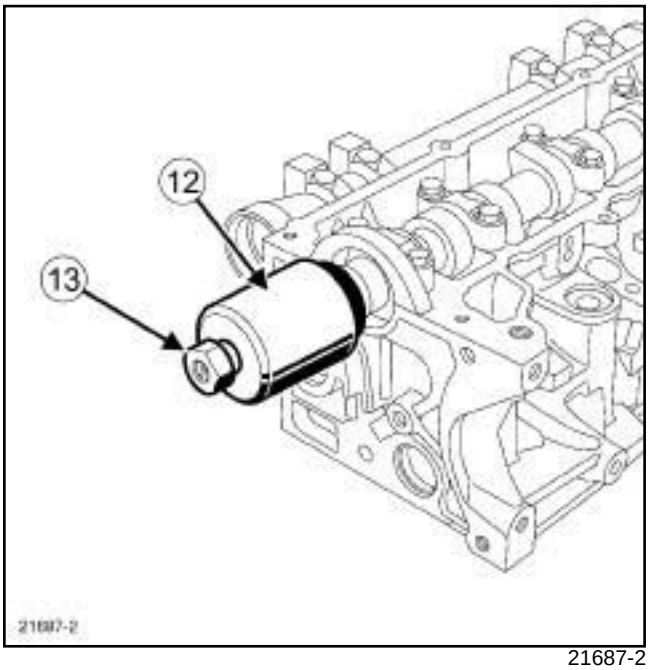

21687-2

❑ Fit the cover (**12**) and the collar nut (**13**) of the **(Mot. 1632)**.

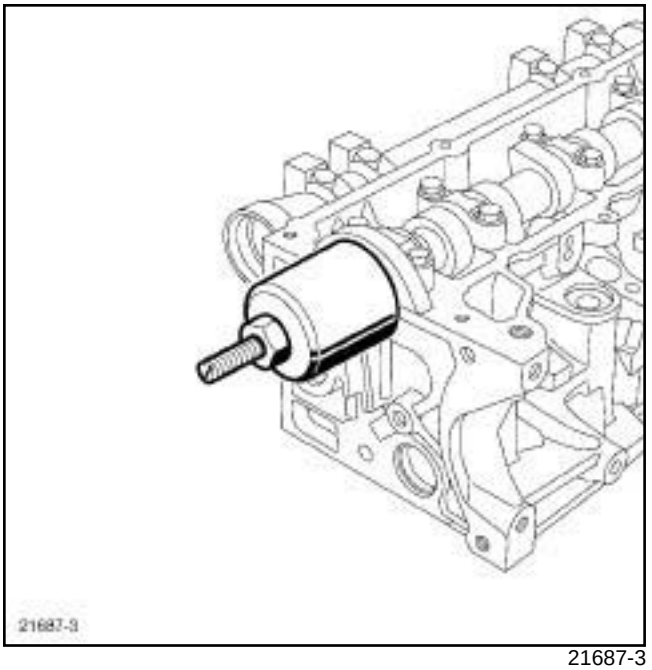

21687-3

❑ Screw on the collar nut until the cover touches the cylinder head.

❑ Remove:

- the collar nut from the **(Mot. 1632)**,
- the cover from the **(Mot. 1632)**,
- the stud of the **(Mot. 1632)**,
- the protective sleeve.

K9K

2 - Second fitting of the camshaft seal

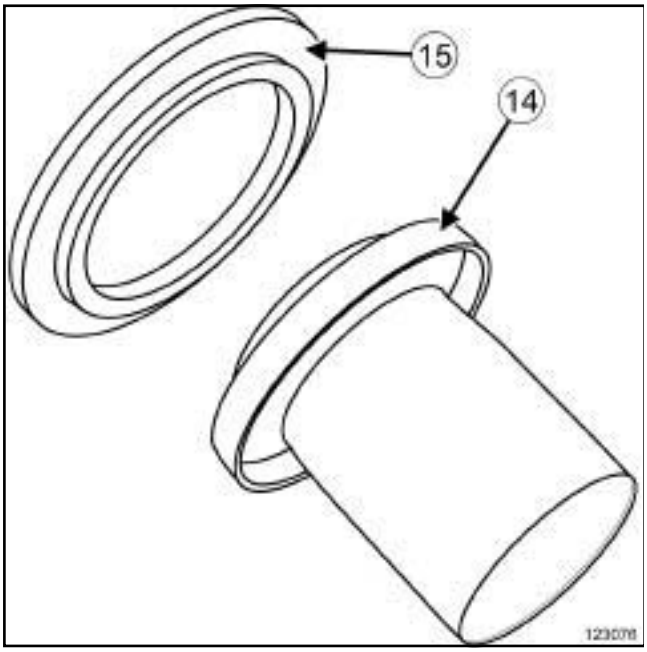

123076

❑ Depending on the case, the Parts Department delivers seals (**14**) equipped with a spacer (**15**) amongst other things.

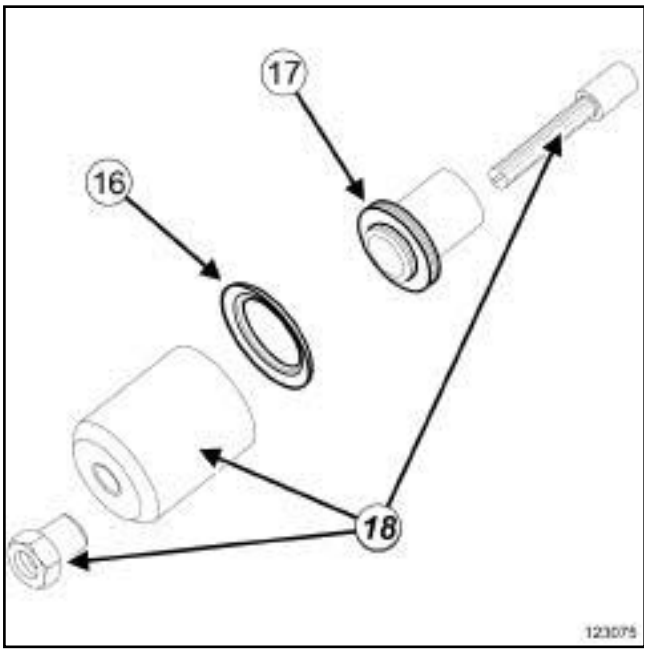

123075

❑

Note:

The spacer (**16**) is used to fit the seal (**17**) . It is used with the tool **(Mot. 1632)** (**18**) .

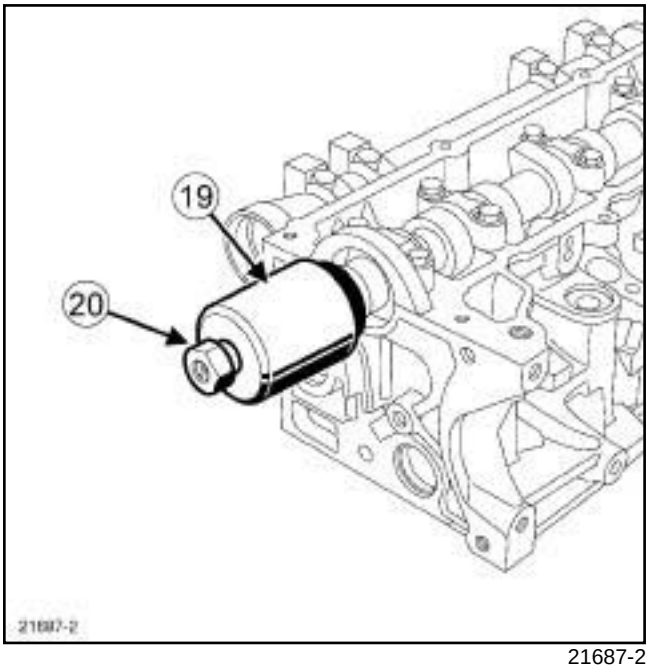

21687-2

❑ Fit the cover (**19**) equipped with the spacer on the camshaft seal end and the collar nut (**20**) of the tool **(Mot. 1632)**.

Note:

The spacer fits on the cover of the tool **(Mot. 1632)** so that the edge of the spacer is on the side of the camshaft seal.

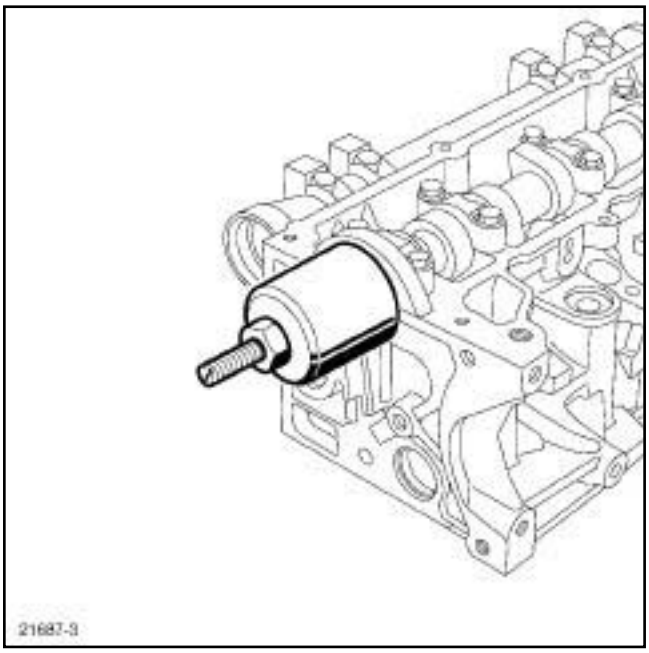

21687-3

❑ Screw on the collar nut until the spacer fitted on the cover touches the cylinder head.

K9K

❑ Remove:

- the collar nut from the **(Mot. 1632)**,
- the cover from the **(Mot. 1632)**,
- the stud of the **(Mot. 1632)**,
- the protection sleeve.

3 - Continued for both methods

❑ Refit:

- the camshaft pulley,
- a new camshaft pulley nut.

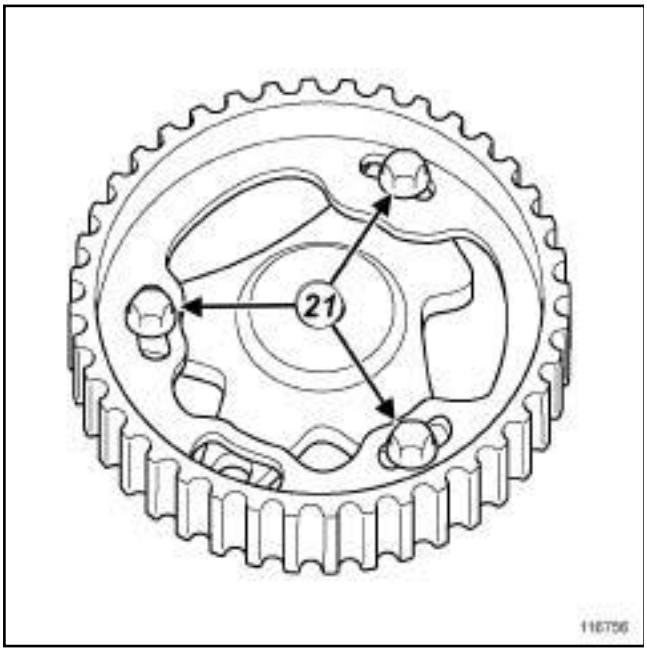

116756

❑ Undo the camshaft pulley hub bolts (**21**) .

❑ Fit the **(Mot. 1606)** on the cylinder head to lock the camshaft pulley wheel.

❑ Tighten:

- the camshaft pulley hub bolts,
- to torque and angle the **camshaft pulley nut (30 N.m + 86° ± 6°.)**

❑ Remove the tool **(Mot. 1606)**.

III - FINAL OPERATION

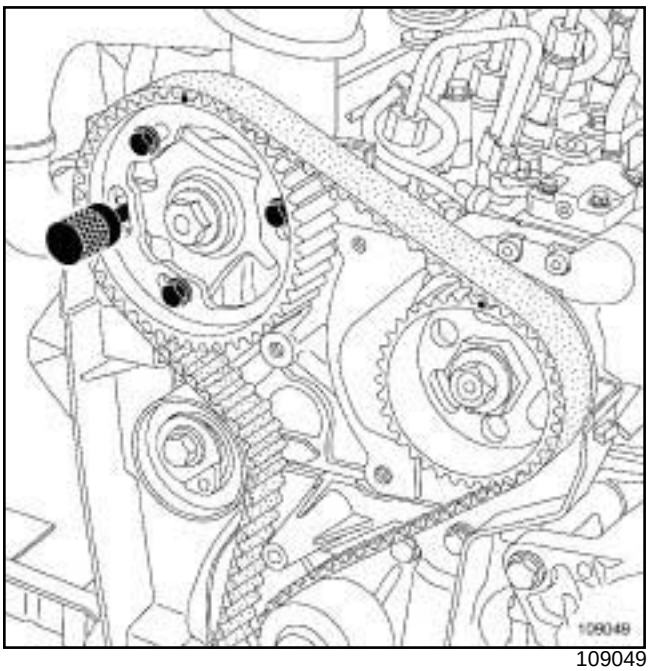

109049

❑ Set the camshaft pulley hub using the tool **(Mot. 1430)**.

> Note:
>
> If the tool **(Mot. 1430)** does not fit, turn the camshaft pulley hub using an **18 mm offset spanner** to adjust the camshaft pulley hub.

❑ Refit:

- the timing belt (see **11A**, **Top and front of engine**, **Timing belt: Removal - Refitting**, page **11A-29**) ,
- the right-hand suspended engine mounting (see **19D**, **Engine mounting**, **Right-hand suspended engine mounting: Removal - Refitting**, page **19D-18**) ,
- the scoop under the scuttle panel grille (see **Scoop under scuttle panel grille: Removal - Refitting**) (56A, Exterior equipment),
- the scuttle panel grille (see **Scuttle panel grille: Removal - Refitting**) (56A, Exterior equipment),
- the windscreen wiper arms (see **Windscreen wiper arm: Removal - Refitting**) (85A, Wiping - Washing),
- the accessories belt (see **11A**, **Top and front of engine**, **Accessories belt: Removal - Refitting**, page **11A-7**) ,
- the engine undertray,

K9K

- the front section of the front right-hand wheel arch liner (see **Front wheel arch liner: Removal - Refitting**) (55A, Exterior protection),
- the front right-hand wheel (see **Wheel: Removal - Refitting**) (35A, Wheels and tyres),
- the engine cover.

❑ Connect the battery (see **Battery : Removal - Refitting**) (80A, Battery).

F4R

Essential special tooling	
Mot. 1801	Camshaft sprocket locking tool - F4 engine.
Mot. 1517	Camshaft seal fitting tool.
Mot. 1512	Exhaust camshaft oil seal fitting tool (28 x 47).

Tightening torques ▽	
toothed sprocket nuts	**80 N.m**
toothed sprocket nuts	**80 N.m**
exhaust camshaft pulley nut	**30 N.m ± 86°**

REMOVAL

I - REMOVAL PREPARATION OPERATION

❑ Position the vehicle on a two-post lift (see **Vehicle: Towing and lifting**) (02A, Lifting equipment).

❑ Remove:

- the engine cover,
- the battery (see **Battery: Removal - Refitting**) (80A, Battery),
- the battery tray (see **Battery tray: Removal - Refitting**) (80A, Battery),
- the engine undertray bolts,
- the engine undertray,
- the front wheels (see **Wheel: Removal - Refitting**) (35A, Wheels and tyres),
- the front section of the front wheel arch liners (see **Front wheel arch liner: Removal - Refitting**) (55A, Exterior protection),
- the front bumper (see **Front bumper: Removal - Refitting**) (55A, Exterior protection),
- the radiator mounting cross member (see **Radiator support cross member: Removal - Refitting**) (31A, Front axle components),
- the accessories belt (see **11A**, **Top and front of engine**, **Accessories belt: Removal - Refitting**, page **11A-7**) ,
- the crankshaft accessories pulley (see **11A**, **Top and front of engine**, **Crankshaft accessories pulley: Removal - Refitting**, page **11A-15**) ,
- the lower engine tie-bar (see **19D**, **Engine mounting**, **Lower engine tie-bar: Removal - Refitting**, page **19D-33**) ,
- the windscreen wiper arms (see **Windscreen wiper arm: Removal - Refitting**) (85A, Wiping - Washing),
- the scuttle panel grille (see **Scuttle panel grille: Removal - Refitting**) (56A, Exterior equipment),
- the scoop under the scuttle panel grille (see **Scoop under scuttle panel grille: Removal - Refitting**) (56A, Exterior equipment),
- the right-hand suspended engine mounting (see **19D**, **Engine mounting**, **Right-hand suspended engine mounting: Removal - Refitting**, page **19D-18**) ,
- the timing belt (see **11A**, **Top and front of engine**, **Timing belt: Removal - Refitting**, page **11A-29**) .

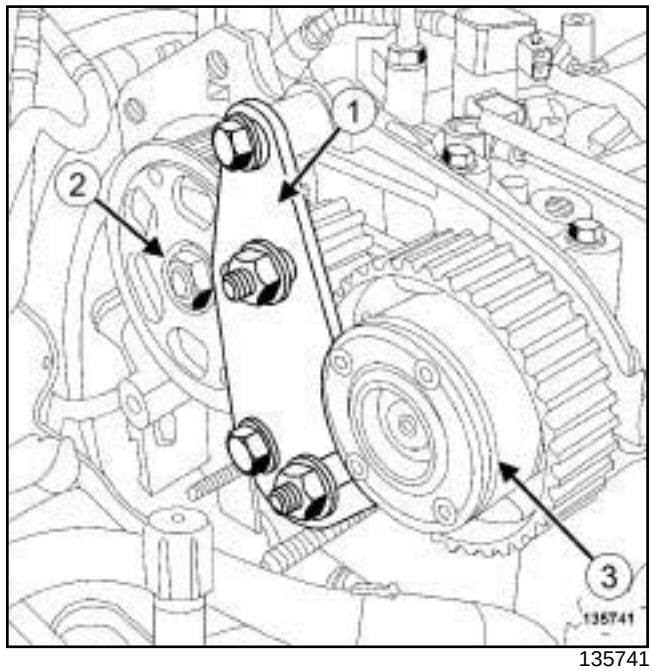

135741

❑ Position the **(Mot. 1801)** (**1**) .

❑ Torque tighten the **toothed sprocket nuts (80 N.m)**.

❑ Remove:

- the exhaust camshaft pulley nut (**2**) ,
- the camshaft dephaser (see **11A**, **Top and front of engine**, **Camshaft dephaser: Removal - Refitting**, page **11A-177**) (**3**) ,
- the **(Mot. 1801)**,
- the exhaust camshaft pulley.

F4R

II - OPERATION FOR REMOVAL OF PART CONCERNED

❑ Remove the camshaft seals using a screwdriver.

REFITTING

I - REFITTING PREPARATION OPERATION

❑ **parts always to be replaced: Camshaft seal on timing end (10,02,02,02)**.

❑ **parts always to be replaced: Camshaft timing sprocket nut (10,02,02,18)**.

> **WARNING**
> Do not scrape the joint faces of the aluminium, any damage caused to the joint face will result in a risk of leaks.

> **WARNING**
> To ensure proper sealing, the gasket surfaces must be clean, dry and not greasy (avoid any finger marks).

❑ Use **SURFACE CLEANER** (see **Vehicle: Parts and ingredients for the repairwork**) (04B, Consumables - Products) to clean and degrease:

- the seal mating face of each camshaft,
- the cylinder head seal housings.

II - REFITTING OPERATION FOR PART CONCERNED

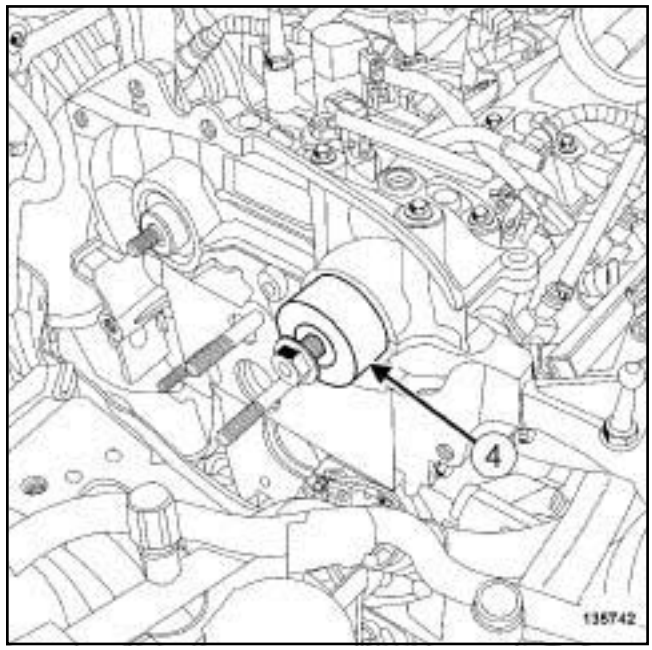

135742

❑ Refit a new inlet camshaft seal using the tool **(Mot. 1517)** (**4**) .

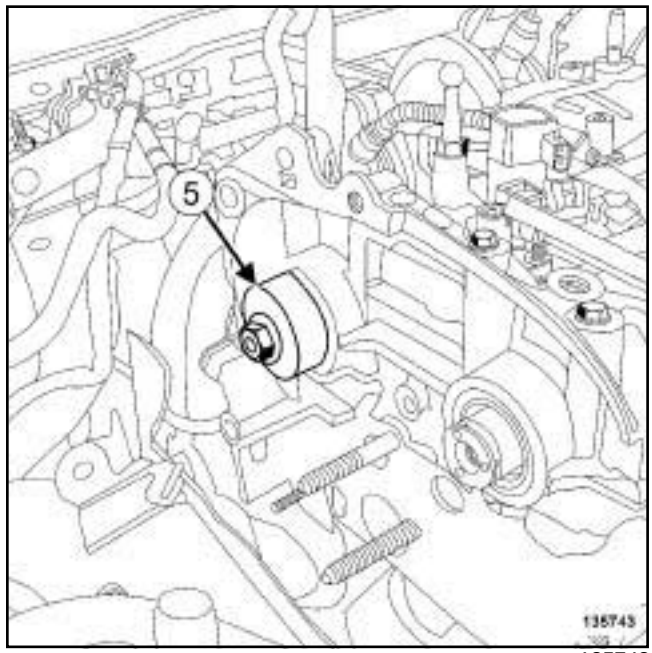

135743

❑ Refit a new exhaust camshaft seal using the tool **(Mot. 1512)** (**5**) .

III - FINAL OPERATION

❑ Refit:

- the camshaft dephaser (see **11A**, **Top and front of engine**, **Camshaft dephaser: Removal - Refitting**, page **11A-177**) ,

- the exhaust camshaft pulley.
- a new nut on the exhaust camshaft pulley.

❏ Tighten to torque:

- the **toothed sprocket nuts (80 N.m)**,
- the **exhaust camshaft pulley nut (30 N.m ± 86°)**.

❏ Remove the tool **(Mot. 1801)**.

❏ Refit:

- the timing belt (see **11A**, **Top and front of engine**, **Timing belt: Removal - Refitting**, page **11A-29**) ,
- the right-hand suspended engine mounting (see **19D**, **Engine mounting**, **Right-hand suspended engine mounting: Removal - Refitting**, page **19D-18**) ,
- the scoop under the scuttle panel grille (see **Scoop under scuttle panel grille: Removal - Refitting**) (56A, Exterior equipment),
- the scuttle panel grille (see **Scuttle panel grille: Removal - Refitting**) (56A, Exterior equipment),
- the windscreen wiper arms (see **Windscreen wiper arm: Removal - Refitting**) (85A, Wiping - Washing),
- the lower engine tie-bar (see **19D**, **Engine mounting**, **Lower engine tie-bar: Removal - Refitting**, page **19D-33**) ,
- the crankshaft accessories pulley (see **11A**, **Top and front of engine**, **Crankshaft accessories pulley: Removal - Refitting**, page **11A-15**) ,
- the accessories belt (see **11A**, **Top and front of engine**, **Accessories belt: Removal - Refitting**, page **11A-7**) ,
- the radiator mounting cross member (see **Radiator support cross member: Removal - Refitting**) (31A, Front axle components),
- the front bumper (see **Front bumper: Removal - Refitting**) (55A, Exterior protection),
- the front section of the front wheel arch liners (see **Front wheel arch liner: Removal - Refitting**) (55A, Exterior protection),
- the front wheels (see **Wheel: Removal - Refitting**) (35A, Wheels and tyres),
- the engine undertray,
- the battery tray (see **Battery tray: Removal - Refitting**) (80A, Battery),
- the battery (see **Battery: Removal - Refitting**) (80A, Battery),
- the engine cover.

F9Q

Essential special tooling	
Mot. 799-01	Timing gear wheel immobiliser.
Mot. 988-02	Camshaft oil seal fitting tool, timing end (25 x 42 x 7 seal) for F engine.

Tightening torques ▽	
camshaft pulley bolt	**80 N.m**

REMOVAL

I - REMOVAL PREPARATION OPERATION

❑ Position the vehicle on a two-post lift (see **Vehicle: Towing and lifting**) (02A, Lifting equipment).

❑ Disconnect the battery (see **Battery: Removal - Refitting**) (80A, Battery).

❑ Remove:

- the engine cover,
- the engine undertray bolts,
- the engine undertray,
- the front right-hand wheel (see **Wheel: Removal - Refitting**) (35A, Wheels and tyres),
- the front right-hand wheel arch liner (see **Front wheel arch liner: Removal - Refitting**) (55A, Exterior protection),
- the accessories belt (see **11A**, **Top and front of engine**, **Accessories belt: Removal - Refitting**, page **11A-7**) ,
- the crankshaft accessories pulley (see **11A**, **Top and front of engine**, **Crankshaft accessories pulley: Removal - Refitting**, page **11A-15**) ,
- the lower engine tie-bar (see **19D**, **Engine mounting**, **Lower engine tie-bar: Removal - Refitting**, page **19D-33**) ,
- the windscreen wiper arms (see **Windscreen wiper arm: Removal - Refitting**) (85A, Wiping - Washing),
- the scuttle panel grille (see **Scuttle panel grille: Removal - Refitting**) (56A, Exterior equipment),
- the scoop under the scuttle panel grille (see **Scoop under scuttle panel grille: Removal - Refitting**) (56A, Exterior equipment),
- the camshaft position sensor (see **13B**, **Diesel injection**, **Camshaft position sensor: Removal - Refitting**, page **13B-19**) ,
- the right-hand suspended engine mounting (see **19D**, **Engine mounting**, **Right-hand suspended engine mounting: Removal - Refitting**, page **19D-18**) ,
- the timing belt (see **11A**, **Top and front of engine**, **Timing belt: Removal - Refitting**, page **11A-29**) ,
- the high pressure pipe between the pump and the rail (see **13B**, **Diesel injection**, **High-pressure pipe between the pump and rail: Removal - Refitting**, page **13B-71**) ,
- the high pressure pump (see **13B**, **Diesel injection**, **High pressure pump: Removal - Refitting**, page **13B-30**) .

II - OPERATION FOR REMOVAL OF PART CONCERNED

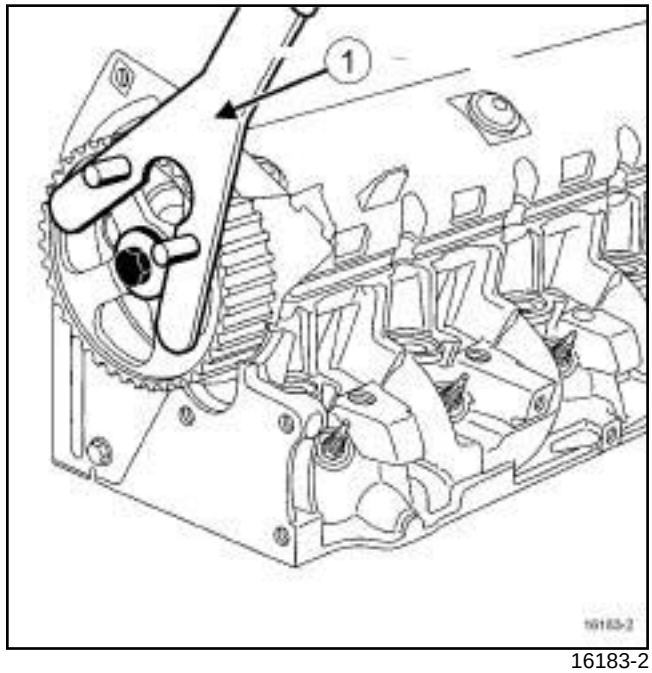

16183-2

❑ Lock the camshaft pulley using the **(Mot. 799-01)** (**1**) .

❑ Remove:

- the camshaft pulley bolt,
- the camshaft pulley,
- the timing end camshaft seal using a flat-blade screwdriver, taking care not to damage the seal mating face.

F9Q

REFITTING

I - REFITTING PREPARATION OPERATION

❑ Use **SURFACE CLEANER** (see **Vehicle: Parts and ingredients for the repairwork**) (04B, Consumables - Products) to clean and degrease:

- the camshaft seal mating face on the camshaft,
- the seal housing in the cylinder head.

❑ **parts always to be replaced: Camshaft timing sprocket bolt (10,02,02,16)**.

parts always to be replaced: Camshaft seal on timing end (10,02,02,02).

II - REFITTING OPERATION FOR PART CONCERNED

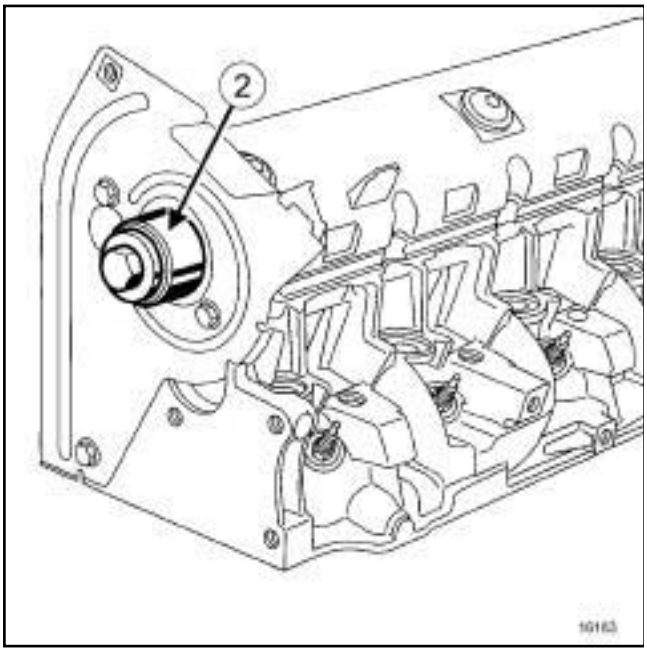

16183

❑ Refit:

- a new timing end camshaft seal using the tool **(Mot. 988-02)** (**2**) ,
- the camshaft pulley.

❑ Lock the camshaft pulley using the **(Mot. 799-01)**.

❑ Torque tighten the **camshaft pulley bolt (80 N.m)**.

III - FINAL OPERATION

❑ Refit:

- the high pressure pump (see **13B**, **Diesel injection**, **High pressure pump: Removal - Refitting**, page **13B-30**) ,
- the high pressure pipe between the pump and the rail (see **13B**, **Diesel injection**, **High-pressure pipe between the pump and rail: Removal - Refitting**, page **13B-71**) ,
- the timing belt (see **11A**, **Top and front of engine**, **Timing belt: Removal - Refitting**, page **11A-29**) ,
- the right-hand suspended engine mounting (see **19D**, **Engine mounting**, **Right-hand suspended engine mounting: Removal - Refitting**, page **19D-18**) ,
- the camshaft position sensor (see **13B**, **Diesel injection**, **Camshaft position sensor: Removal - Refitting**, page **13B-19**) ,
- the scoop under the scuttle panel grille (see **Scoop under scuttle panel grille: Removal - Refitting**) (56A, Exterior equipment),
- the scuttle panel grille (see **Scuttle panel grille: Removal - Refitting**) (56A, Exterior equipment),
- the windscreen wiper arms (see **Windscreen wiper arm: Removal - Refitting**) (85A, Wiping - Washing),
- the lower engine tie-bar (see **19D**, **Engine mounting**, **Lower engine tie-bar: Removal - Refitting**, page **19D-33**) ,
- the crankshaft accessories pulley (see **11A**, **Top and front of engine**, **Crankshaft accessories pulley: Removal - Refitting**, page **11A-15**) ,
- the accessories belt (see **11A**, **Top and front of engine**, **Accessories belt: Removal - Refitting**, page **11A-7**) ,
- the front right-hand wheel arch liner (see **Front wheel arch liner: Removal - Refitting**) (55A, Exterior protection),
- the front right-hand wheel (see **Wheel: Removal - Refitting**) (35A, Wheels and tyres),
- the engine undertray,
- the engine cover.

❑ Connect the battery (see **Battery : Removal - Refitting**) (80A, Battery).

K4M

Tightening torques ▽	
oil separator bolts	**15 N.m**

REMOVAL

I - REMOVAL PREPARATION OPERATION

❑ Remove:

- the engine cover,
- the throttle valve (see **12A**, **Fuel mixture**, **Throttle valve: Removal - Refitting**, page **12A-17**) ,
- the windscreen wiper arms (see **Windscreen wiper arm: Removal - Refitting**) (85A, Wiping - Washing),
- the scuttle panel grille (see **Scuttle panel grille: Removal - Refitting**) (56A, Exterior equipment),
- the scoop under the scuttle panel grille (see **Scoop under scuttle panel grille: Removal - Refitting**) (56A, Exterior equipment),
- the three ignition coils on the flywheel end (see **17A**, **Ignition**, **Coils Removal - Refitting**, page **17A-1**) ,
- the intake distributor (see **12A**, **Fuel mixture**, **Inlet manifold: Removal - Refitting**, page **12A-23**) .

II - OPERATION FOR REMOVAL OF PART CONCERNED

K4M, and 848

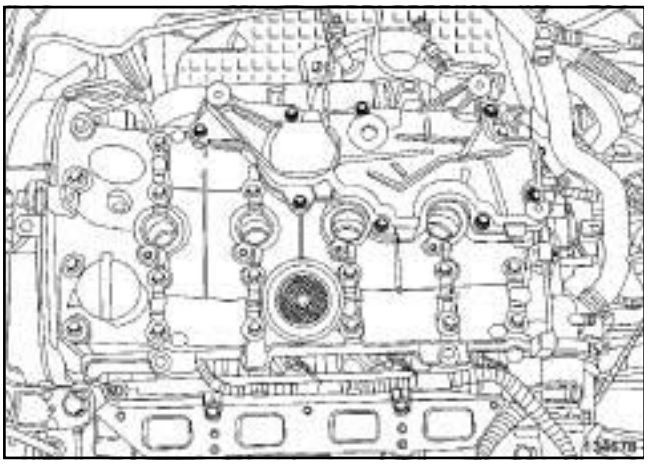

134678

❑ Remove:

- the oil separator bolts,
- the oil separator.

K4M, and 858 or 866

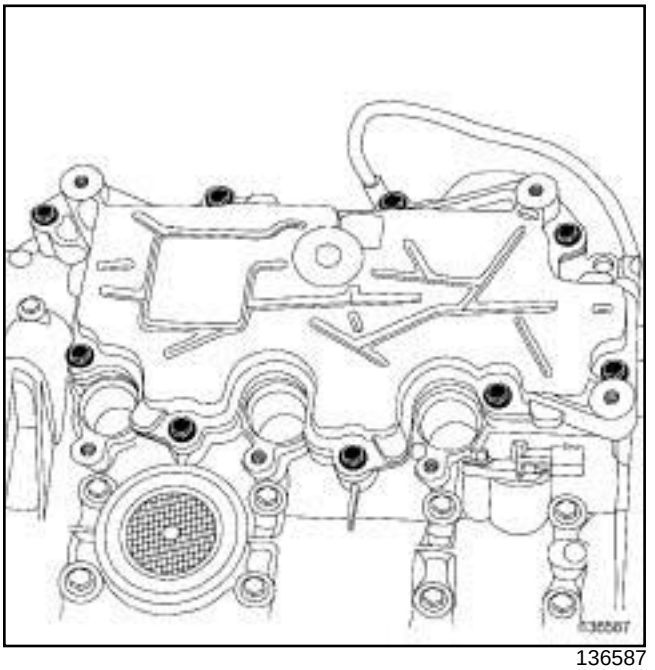

136587

❑ Remove:

- the oil separator bolts,
- the oil separator.

REFITTING

I - REFITTING PREPARATION OPERATION

❑ **parts always to be replaced: oil separator bolt (11,04,06,23)**.

WARNING
When cleaning parts, it is essential that the parts do not impact on each other, otherwise their mating faces may be damaged and therefore their adjustments may be altered, which could damage the engine.

WARNING
Do not scrape the joint faces of the aluminium, any damage caused to the joint face will result in a risk of leaks.

K4M

❑ Use **SUPER CLEANING AGENT FOR JOINT FACES** (see **Vehicle: Parts and ingredients for the repairwork**) (04B, Consumables - Products) to clean:

- the joint face on the oil separator if it is to be reused,
- the joint face on the rocker cover.

❑ Use **SURFACE CLEANER** (see **Vehicle: Parts and ingredients for the repairwork**) (04B, Consumables - Products) to degrease:

- the joint face on the oil separator if it is to be reused,
- the joint face on the rocker cover.

WARNING
To ensure proper sealing, the gasket surfaces must be clean, dry and not greasy (avoid any finger marks).

WARNING
Applying excess sealant could cause it to be squeezed out when parts are tightened. A mixture of sealant and fluid could damage certain components (engine, radiator, etc.).

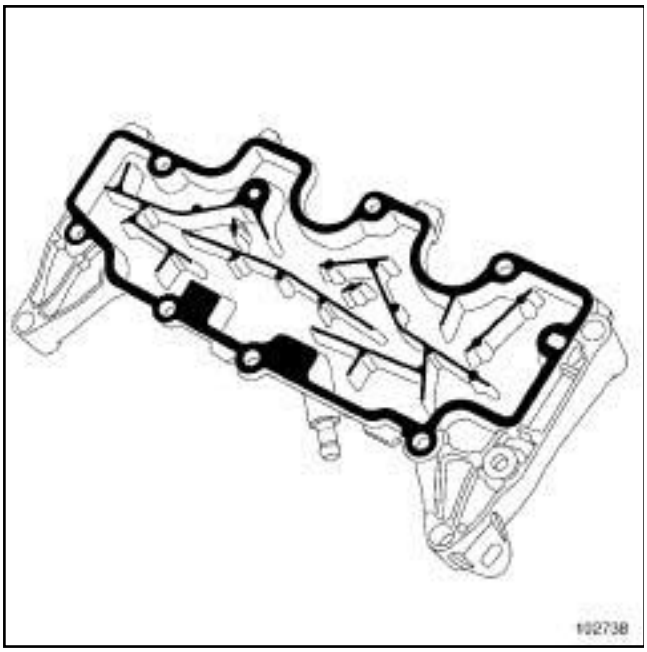

102738

❑ Apply **RESIN ADHESIVE** (see **Vehicle: Parts and ingredients for the repairwork**) (04B, Consumables - Products) using a stipple roller on the joint face of the oil separator until the joint face is completely coated.

II - REFITTING OPERATION FOR PART CONCERNED

K4M, and 848

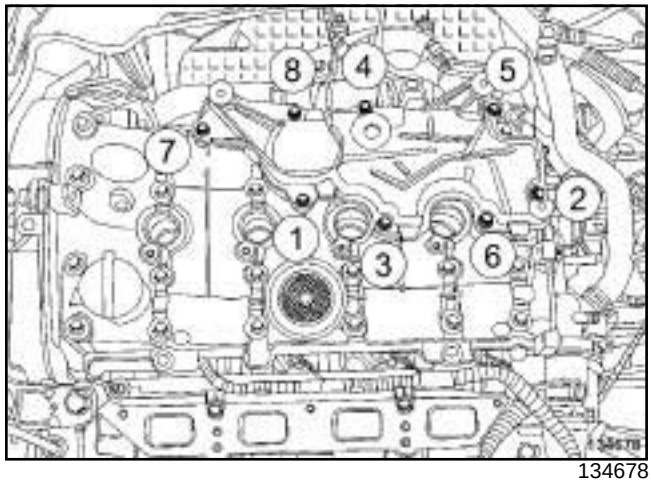

134678

❑ Refit:

- the oil separator,
- new bolts on the oil separator.

K4M, and 858 or 866

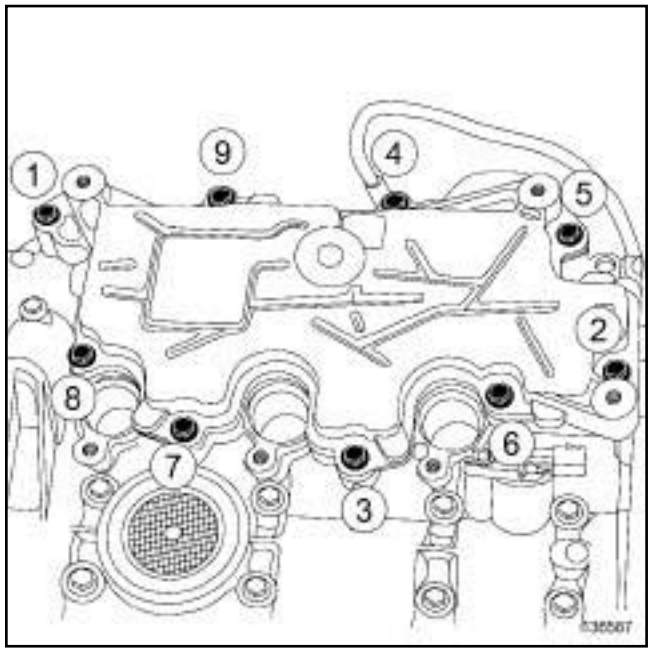

136587

❑ Refit:

- the oil separator,

- new bolts on the oil separator.

❑ Torque tighten in order the **oil separator bolts (15 N.m)**.

III - FINAL OPERATION

❑ Refit:

- the inlet manifold (see **12A**, **Fuel mixture**, **Inlet manifold: Removal - Refitting**, page **12A-23**) ,
- the three ignition coils on the flywheel end (see **17A**, **Ignition**, **Coils Removal - Refitting**, page **17A-1**) ,
- the scoop under the scuttle panel grille (see **Scoop under scuttle panel grille: Removal - Refitting**) (56A, Exterior equipment),
- the scuttle panel grille (see **Scuttle panel grille: Removal - Refitting**) (56A, Exterior equipment),
- the windscreen wiper arms (see **Windscreen wiper arm: Removal - Refitting**) (85A, Wiping - Washing),
- the throttle valve (see **12A**, **Fuel mixture**, **Throttle valve: Removal - Refitting**, page **12A-17**) ,
- the engine cover.

F9Q

Essential special tooling	
Mot. 1448	Long nose pliers for hose clips.

Tightening torques ▽	
oil separator bolts	**30 N.m**

REMOVAL

I - REMOVAL PREPARATION OPERATION

❑ Position the vehicle on a two-post lift (see **Vehicle: Towing and lifting**) (02A, Lifting equipment).

❑ Remove:

- the engine cover,
- the engine undertray bolts,
- the engine undertray.

II - OPERATION FOR REMOVAL OF PART CONCERNED

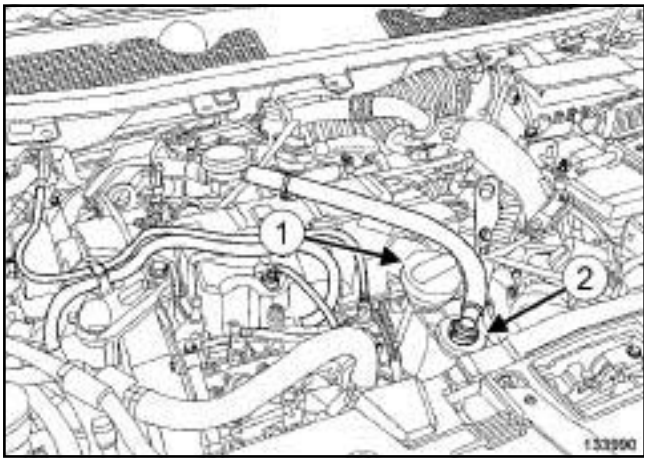

133990

❑ Remove the dipstick (**1**) .

❑ Disconnect the oil vapour rebreathing pipe (**2**) .

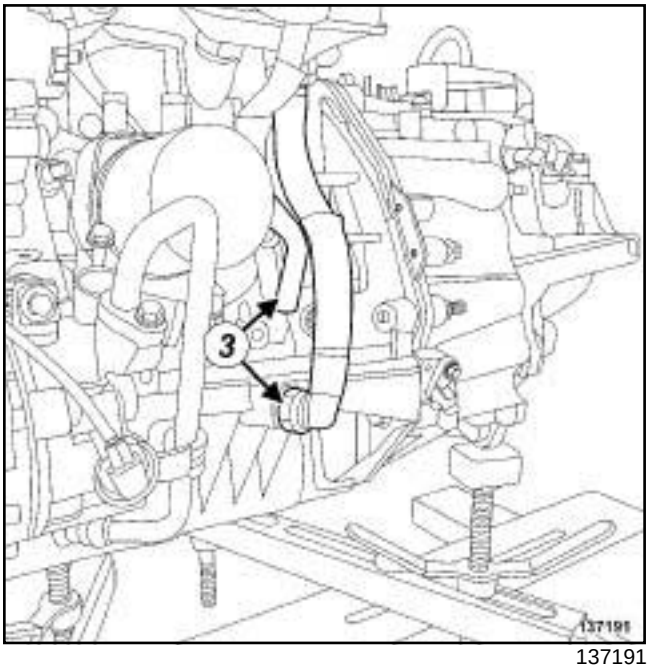

137191

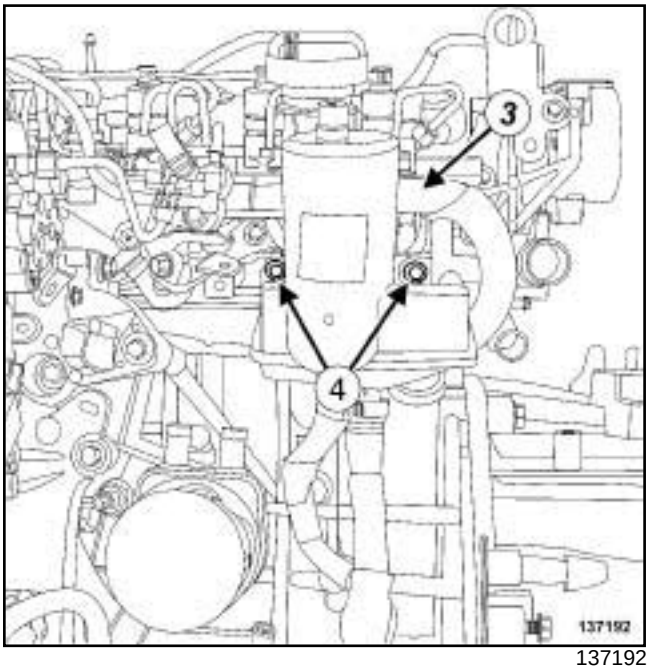

137192

❑ Disconnect the oil return pipes (**3**) .

❑ Remove the oil separator bolts (**4**) .

❑ Separate the oil separator clip on the cylinder block using the tool **(Mot. 1448)**.

❑ Remove the oil separator.

F9Q

REFITTING

I - REFITTING OPERATION FOR PART CONCERNED

- ❏ Refit the oil separator.
- ❏ Fit the oil separator clip on the cylinder block using the tool **(Mot. 1448)**.
- ❏ Refit the oil separator bolts.
- ❏ Torque tighten the **oil separator bolts (30 N.m)**.
- ❏ Connect:
  - the oil return pipes,
  - the oil vapour rebreathing pipe.
- ❏ Refit the dipstick.

II - FINAL OPERATION

- ❏ Refit:
  - the engine undertray,
  - the engine cover.

F4R

Tightening torques ▽	
oil separator bolts	**12 N.m**

IMPORTANT
Wear leaktight gloves (Nitrile type) for this operation.

REMOVAL

I - REMOVAL PREPARATION OPERATION

❑ Position the vehicle on a two-post lift (see **Vehicle: Towing and lifting**) (02A, Lifting equipment).

❑ Remove:

- the engine undertray bolts,
- the engine undertray,
- the engine cover.

❑ Disconnect the battery (see **Battery: Removal - Refitting**) (80A, Battery).

❑ Remove:

- the windscreen wiper arms (see **Windscreen wiper arm: Removal - Refitting**) (85A, Wiping - Washing),
- the scuttle panel grille (see **Scuttle panel grille: Removal - Refitting**) (56A, Exterior equipment),
- the scoop under the scuttle panel grille (see **Scoop under scuttle panel grille: Removal - Refitting**) (56A, Exterior equipment).

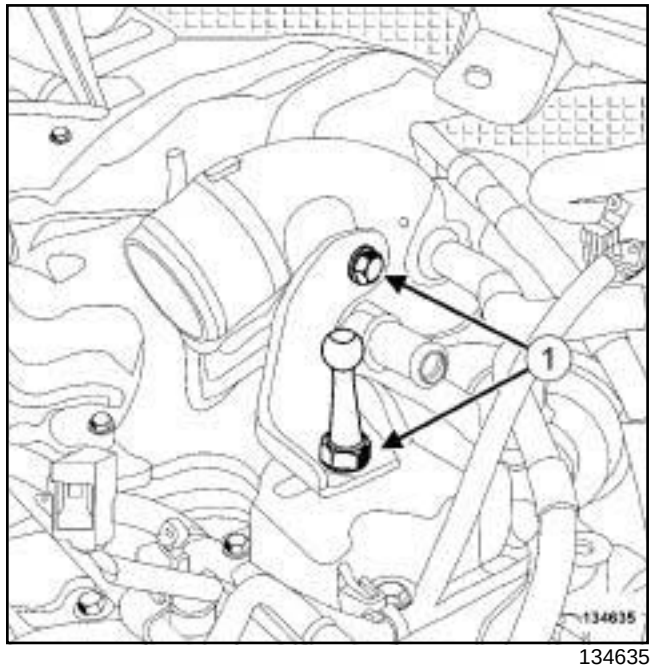

134635

❑ Remove:

- the bolts (**1**) of the turbocharger bracket,
- the turbocharger bracket.

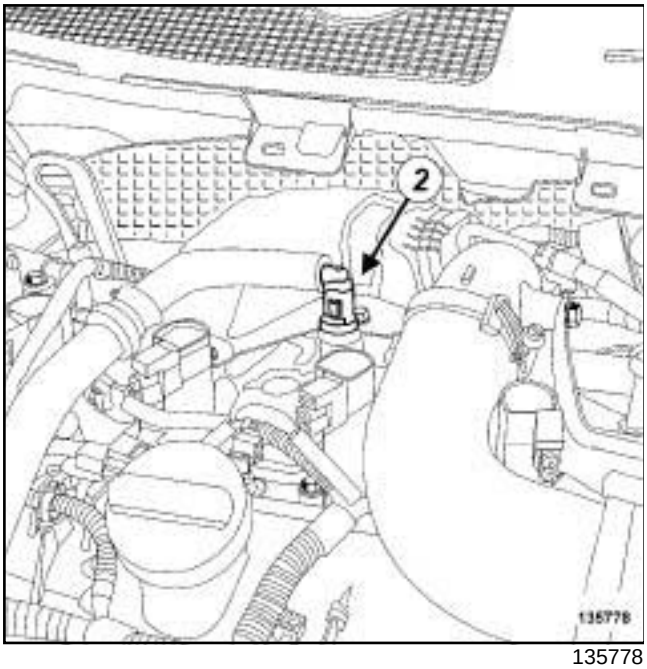

135778

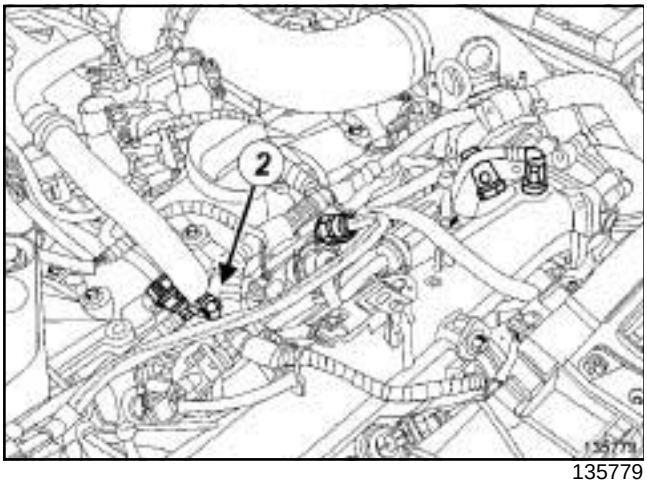

135779

❑ Disconnect the oil vapour rebreathing pipe at (**2**) .

❑ Remove the oil vapour rebreathing pipe.

❑ Remove:

- the upstream oxygen sensor (see **17B**, **Petrol injection**, **Oxygen sensors: Removal - Refitting**, page **17B-1**) ,
- the front right-hand wheel (see **Wheel: Removal - Refitting**) (35A, Wheels and tyres),
- the front section of the front right-hand wheel arch liner (see **Front wheel arch liner: Removal - Refitting**) (55A, Exterior protection).

❑ Drain the manual gearbox (see **Manual gearbox oil: Draining - Refilling**) (21A, Manual gearbox).

❑ Remove:

- the front right-hand wheel driveshaft (see **Front right-hand wheel driveshaft: Removal - Refitting**) (29A, Driveshafts),
- the right-hand differential output seal (see **Differential output seal: Removal - Refitting**) (21A, Manual gearbox),
- the lower engine tie-bar (see **19D**, **Engine mounting**, **Lower engine tie-bar: Removal - Refitting**, page **19D-33**) ,
- the connecting hose (see **19B**, **Exhaust**, **Connecting hose: Removal - Refitting**, page **19B-60**) ,
- the catalytic converter (see **19B**, **Exhaust**, **Catalytic converter: Removal - Refitting**, page **19B-17**) ,
- the turbocharger oil pipes (see **12B**, **Turbocharging**, **Turbocharger oil pipe: Removal - Refitting**, page **12B-22**) ,
- the turbocharger (see **12B**, **Turbocharging**, **Turbocharger: Removal - Refitting**, page **12B-8**) .

II - OPERATION FOR REMOVAL OF PART CONCERNED

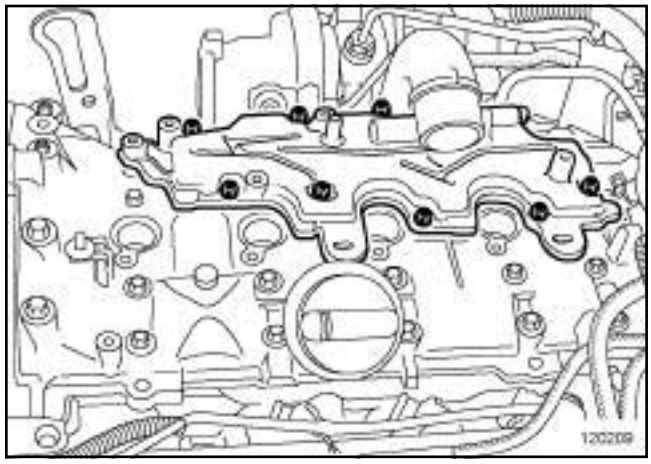

120209

❑ Remove:

- the oil decanter bolts,
- the oil separator.

F4R

REFITTING

I - REFITTING PREPARATION OPERATION

❑ **parts always to be replaced: oil separator bolt (11,04,06,23)**.

> **WARNING**
> When cleaning parts, it is essential that the parts do not impact on each other, otherwise their mating faces may be damaged and therefore their adjustments may be altered, which could damage the engine.

> **WARNING**
> Do not scrape the joint faces of the aluminium, any damage caused to the joint face will result in a risk of leaks.

❑ Use **SUPER CLEANING AGENT FOR JOINT FACES** (see **Vehicle: Parts and ingredients for the repairwork**) (04B, Consumables - Products) to clean the joint face:

- of the oil decanter in case of reuse,
- of the rocker cover.

❑ Use **SURFACE CLEANER** (see **Vehicle: Parts and ingredients for the repairwork**) (04B, Consumables - Products) to degrease the joint face:

- of the oil decanter in case of reuse,
- of the rocker cover.

> **WARNING**
> To ensure proper sealing, the gasket surfaces must be clean, dry and not greasy (avoid any finger marks).

> **WARNING**
> Applying excess sealant could cause it to be squeezed out when parts are tightened. A mixture of sealant and fluid could damage certain components (engine, radiator, etc.).

❑ Apply **RESIN ADHESIVE** (see **Vehicle: Parts and ingredients for the repairwork**) (04B, Consumables - Products) using a stipple roller on the joint face of the oil separator until the joint face is completely coated.

II - REFITTING OPERATION FOR PART CONCERNED

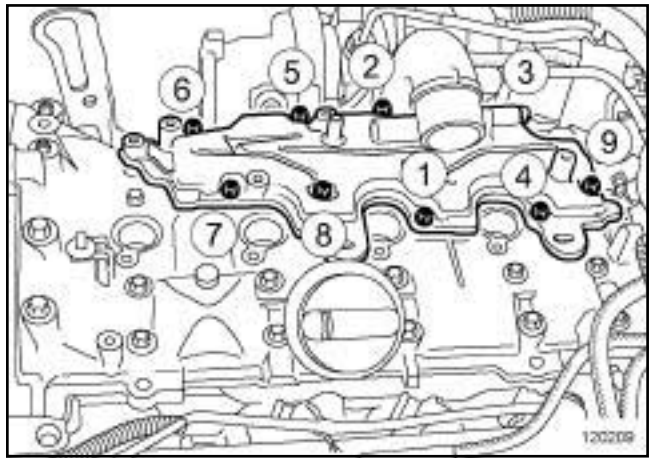

120209

❑ Refit:

- the oil separator,
- new bolts on the oil separator.

❑ Torque tighten in order the **oil separator bolts (12 N.m)**.

III - FINAL OPERATION

❑ Refit:

- the turbocharger (see **12B**, **Turbocharging**, **Turbocharger: Removal - Refitting**, page **12B-8**) ,
- the turbocharger oil pipes (see **12B**, **Turbocharging**, **Turbocharger oil pipe: Removal - Refitting**, page **12B-22**) ,
- the catalytic converter (see **19B**, **Exhaust**, **Catalytic converter: Removal - Refitting**, page **19B-17**) ,
- the connecting hose (see **19B**, **Exhaust**, **Connecting hose: Removal - Refitting**, page **19B-60**) ,
- the lower engine tie-bar (see **19D**, **Engine mounting**, **Lower engine tie-bar: Removal - Refitting**, page **19D-33**) ,
- a new right-hand differential output seal (see **Differential output seal: Removal - Refitting**) (21A, Manual gearbox),
- the front right-hand wheel driveshaft (see **Front right-hand wheel driveshaft: Removal - Refitting**) (29A, Driveshafts).

❑ Fill the manual gearbox (see **Manual gearbox oil: Draining - Refilling**) (21A, Manual gearbox).

F4R

❑ Refit:

- the front section of the front right-hand wheel arch liner (see **Front wheel arch liner: Removal - Refitting**) (55A, Exterior protection),
- the front right-hand wheel (see **Wheel: Removal - Refitting**) (35A, Wheels and tyres),
- the upstream oxygen sensor (see **17B**, **Petrol injection**, **Oxygen sensors: Removal - Refitting**, page **17B-1**) ,
- the oil vapour rebreathing pipe,
- the turbocharger bracket,
- the scoop under the scuttle panel grille (see **Scoop under scuttle panel grille: Removal - Refitting**) (56A, Exterior equipment),
- the scuttle panel grille (see **Scuttle panel grille: Removal - Refitting**) (56A, Exterior equipment),
- the windscreen wiper arms (see **Windscreen wiper arm: Removal - Refitting**) (85A, Wiping - Washing),

❑ Connect the battery (see **Battery: Removal - Refitting**) (80A, Battery).

❑ Refit:

- the engine cover,
- the engine undertray.

REMOVAL

I - REMOVAL PREPARATION OPERATION

❏ Position the vehicle on a two-post lift (see **Vehicle: Towing and lifting**) (02A, Lifting equipment).

❏ Remove:

- the front wheels (see **Wheel: Removal - Refitting**) (35A, Wheels and tyres),
- the front section of the front wheel arch liners (see **Front wheel arch liner: Removal - Refitting**) (55A, Exterior protection),
- the front bumper (see **Front bumper: Removal - Refitting**) (55A, Exterior protection),
- the left-hand headlight (see **Front headlight: Removal - Refitting**) (80B, Headlights),
- the front left-hand support of the front bumper (see **Front bumper support: Removal - Refitting**) (42A, Front upper structure).

II - OPERATION FOR REMOVAL OF PART CONCERNED

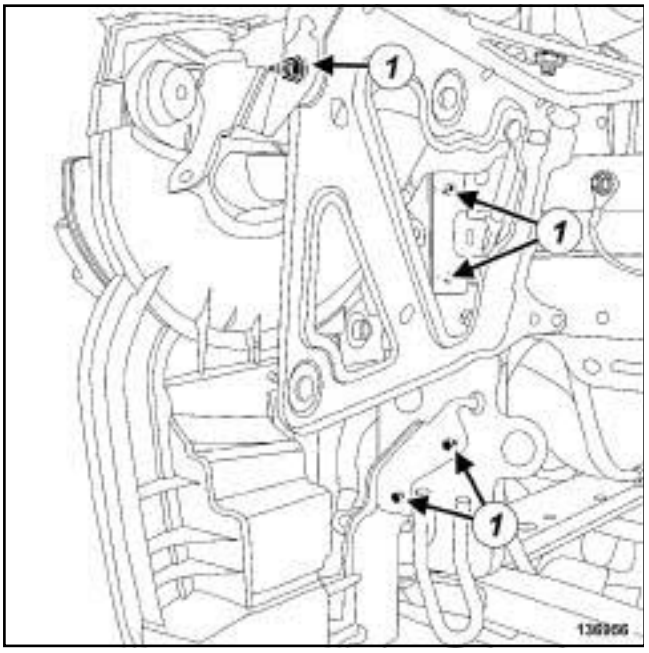

136956

❏ Remove:

- the air resonator bolts (**1**) ,
- the air resonator.

REFITTING

I - REFITTING OPERATION FOR PART CONCERNED

❏ Refit the air resonator.

II - FINAL OPERATION

❏ Refit:

- the front left-hand support of the front bumper (see **Front bumper support: Removal - Refitting**) (42A, Front upper structure),
- the left-hand headlight (see **Front headlight: Removal - Refitting**) (80B, Headlights),
- the front bumper (see **Front bumper: Removal - Refitting**) (55A, Exterior protection),
- the front section of the front wheel arch liners (see **Front wheel arch liner: Removal - Refitting**) (55A, Exterior protection),
- the front wheels (see **Wheel: Removal - Refitting**) (35A, Wheels and tyres).

REMOVAL

I - REMOVAL PREPARATION OPERATION

❏ Remove the battery cover.

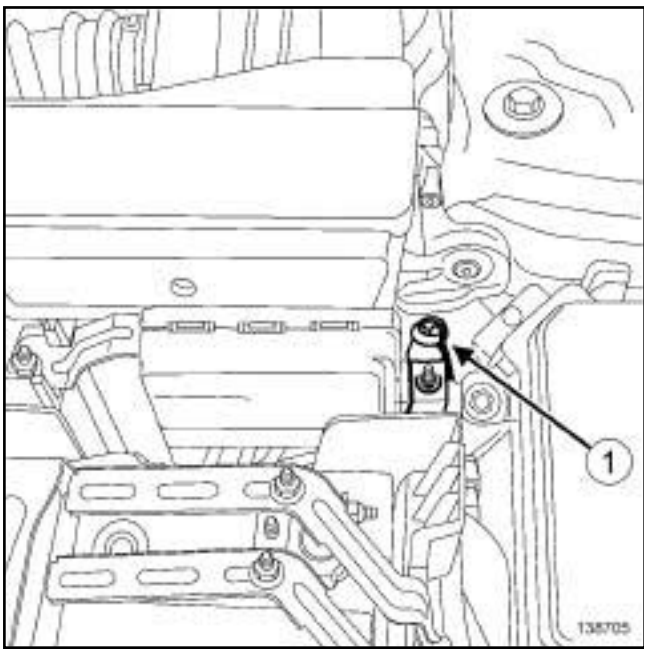

138705

❏ Move aside the wiring (**1**) .

II - OPERATION FOR REMOVAL OF PART CONCERNED

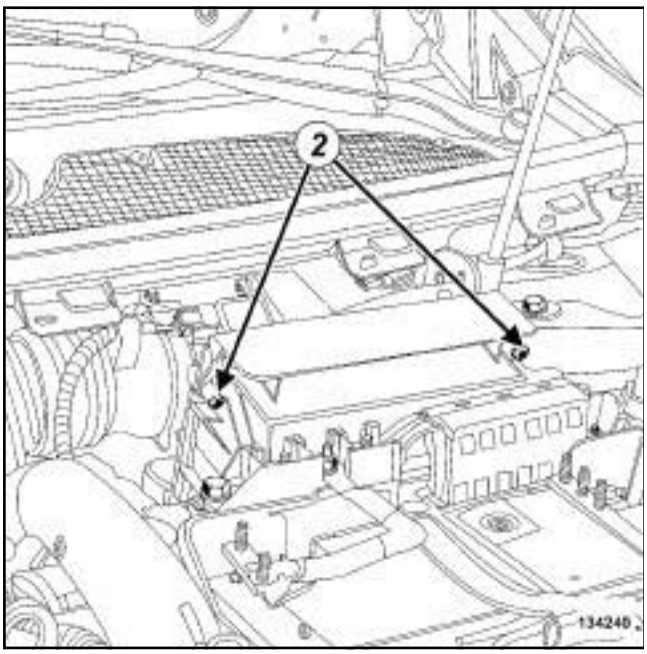

134240

❏ Undo the bolts (**2**) from the air filter unit slide valve.

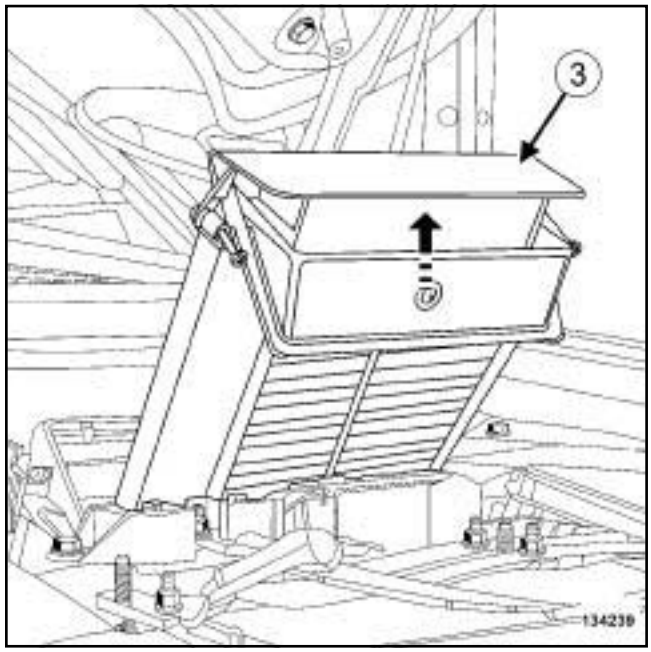

134239

❏ Pull the air filter unit slide valve upwards at (**3**) .

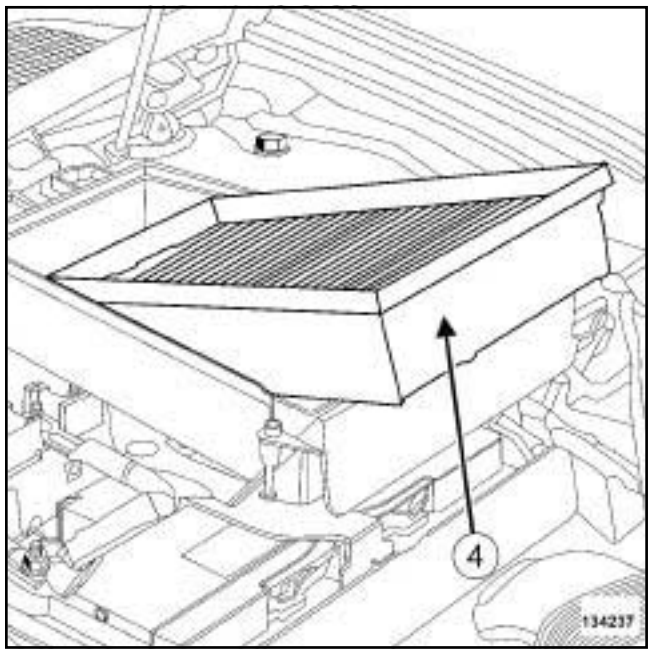

134237

❏ Remove the air filter (**4**) .

REFITTING

I - REFITTING PREPARATION OPERATION

❏ Clean the air filter housing.

II - REFITTING OPERATION

❏

> **WARNING**
> If the air filter is fitted incorrectly in the air filter unit, unfiltered air may enter the engine.

❏ Refit:

- the air filter,
- the air filter unit slide valve,
- the air filter unit slide valve bolts.

III - FINAL OPERATION

❏ Fit the wiring.

❏ Refit the battery cover.

Tightening torques ▽	
air filter unit bolts	**8 N.m**
air filter unit air outlet pipe clip	**6 N.m**

REMOVAL

I - REMOVAL PREPARATION OPERATION

- ❑ Remove the battery (see **Battery : Removal - Refitting**) (80A, Battery).
- ❑ Remove the battery tray (see **Battery tray: Removal - Refitting**) (80A, Battery).

II - OPERATION FOR REMOVAL OF PART CONCERNED

F9Q or K9K

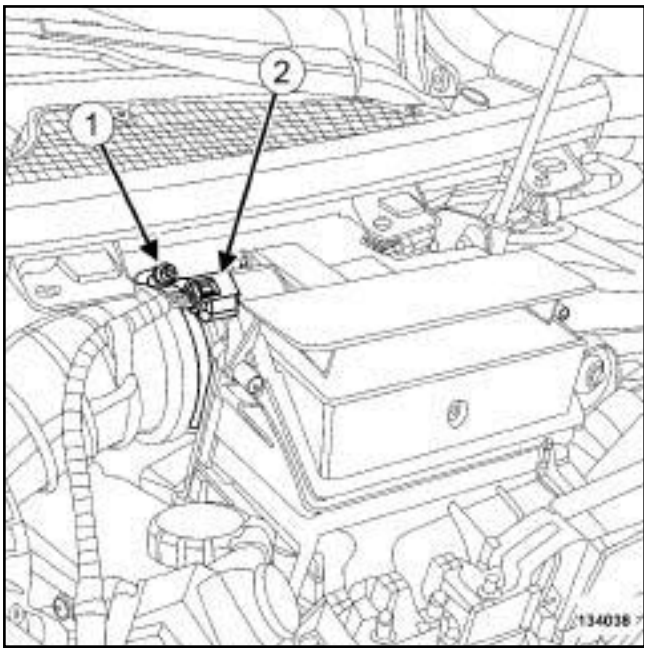

134038

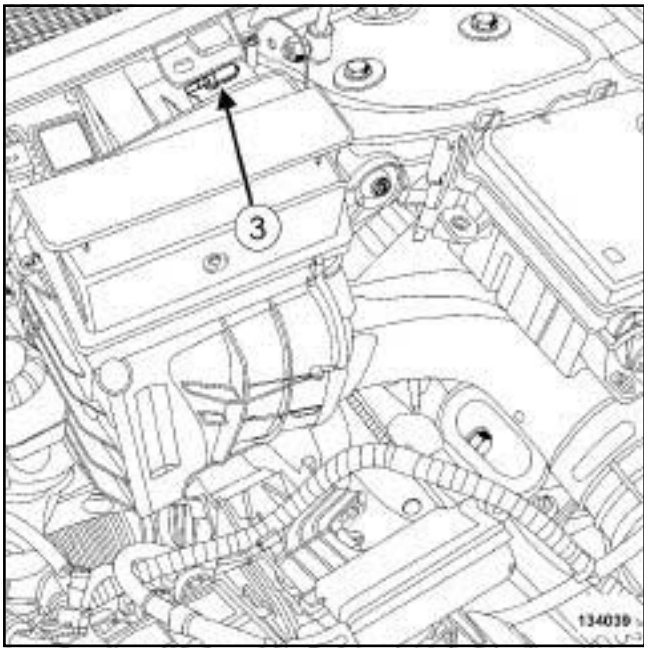

134039

- ❑ Undo the clip (**1**) of the air filter unit air outlet pipe.
- ❑ Disconnect the air outlet pipe from the air filter unit.
- ❑ Move the air outlet pipe of the air filter unit to one side.
- ❑ Disconnect the air flowmeter connector (**2**) .
- ❑ Unclip the connector (**3**) from the scuttle panel grille.

F4R or K4M

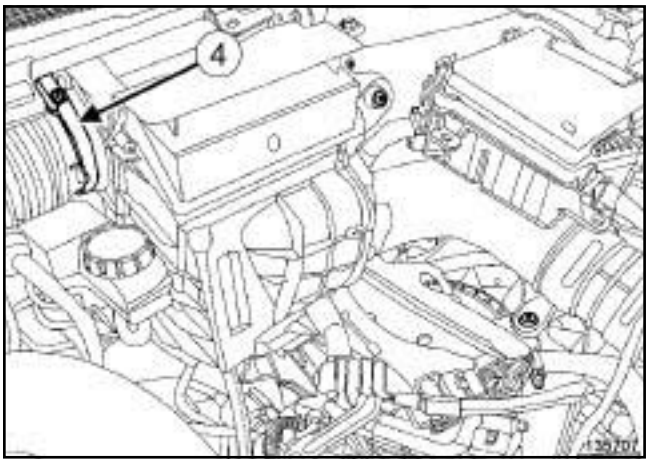

135707

- ❑ Loosen the clip (**4**) of the air outlet pipe on the air filter unit.
- ❑ Move the air outlet pipe of the air filter unit to one side.

III - OPERATION FOR REMOVAL OF PART CONCERNED

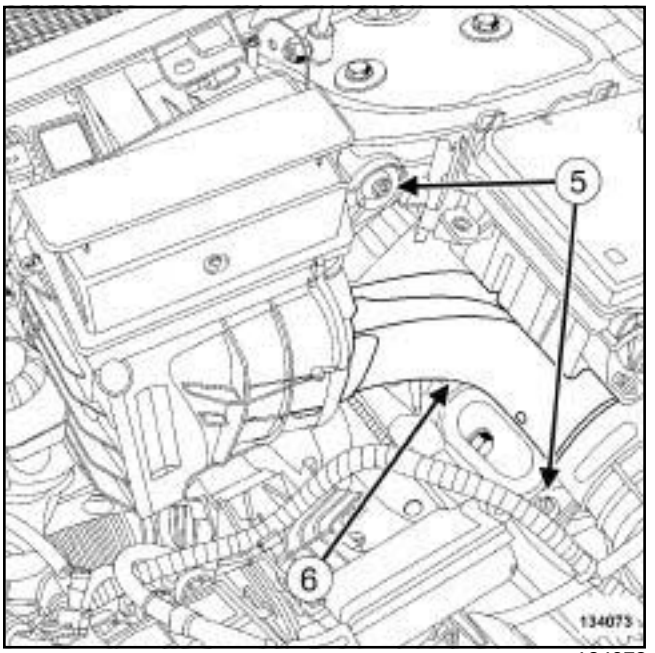

134073

- ❑ Remove:

  - the air filter unit bolt (**5**) ,

- the « air filter unit - air filter - air sleeve » assembly (**6**) ,
- the air sleeve of the « air filter unit - air filter - air sleeve » assembly.

F9Q or K9K

If replacing the air filter unit

❏ Remove the air flowmeter (see **12A**, **Fuel mixture**, **Air flowmeter: Removal - Refitting**, page **12A-7**) .

REFITTING

I - REFITTING PREPARATION OPERATION

F9Q or K9K

❏ Refit the air flowmeter (see **12A**, **Fuel mixture**, **Air flowmeter: Removal - Refitting**, page **12A-7**) .

II - REFITTING OPERATION FOR PART CONCERNED

❏ Refit:

- the air sleeve to the « air filter unit - air filter - air sleeve » assembly,
- the « air filter unit - air filter - air sleeve » assembly,
- the air filter unit bolts.

❏ Torque tighten the **air filter unit bolts (8 N.m)**.

F9Q or K9K

❏ Connect the air flowmeter connector.

❏ Clip the connector onto the scuttle panel grille.

❏ Connect the air outlet pipe of the air filter unit.

❏ Torque tighten the **air filter unit air outlet pipe clip (6 N.m)**.

❏ Refit the battery tray (see **Battery tray: Removal - Refitting**) (80A, Battery).

❏ Refit the battery (see **Battery: Removal - Refitting**) (80A, Battery).

K9K

Essential equipment
diagnostic tool

Tightening torques ▽	
air filter box air outlet pipe clip on the air flowmeter	**5.5 N.m**

REMOVAL

I - REMOVAL PREPARATION OPERATION

❑ Remove the front engine cover.

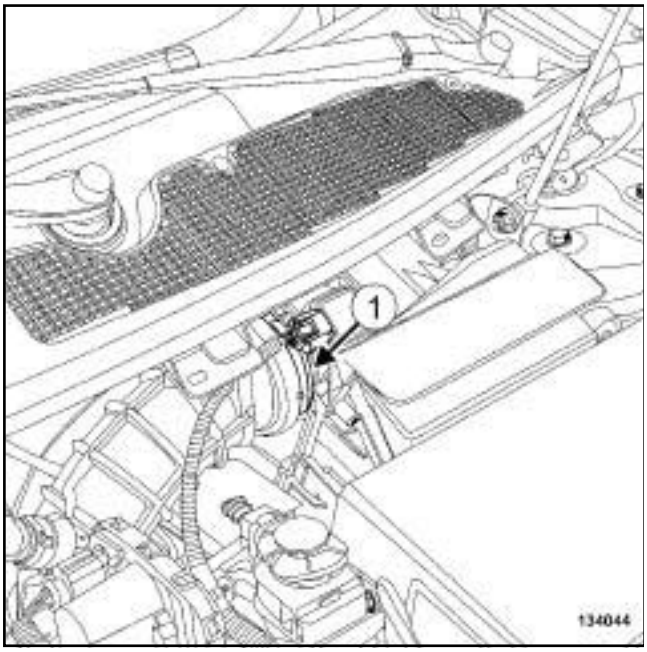

134044

❑ Loosen the clip (**1**) of the air filter unit air outlet pipe on the air flowmeter.

❑ Disconnect the air filter unit air outlet pipe from the air flowmeter.

❑ Move the air filter unit air outlet pipe slightly away from the air flowmeter.

II - OPERATION FOR REMOVAL OF PART CONCERNED

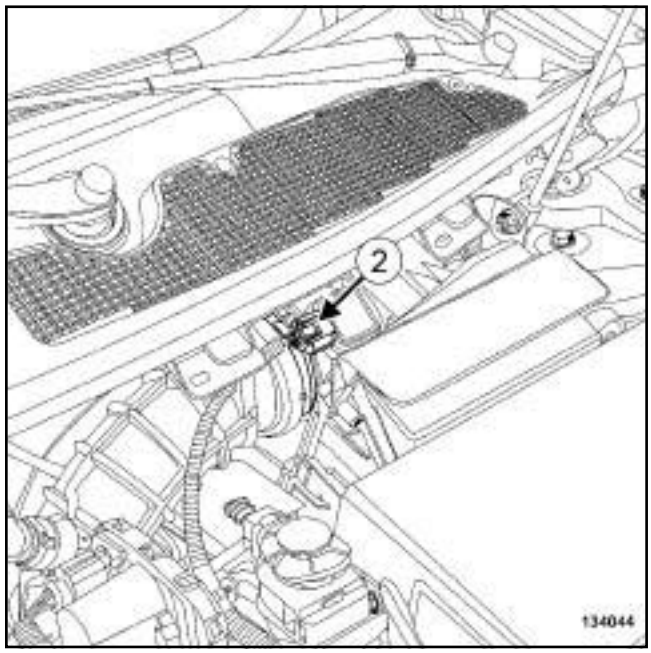

134044

❑ Disconnect the air flowmeter connector (**2**) .

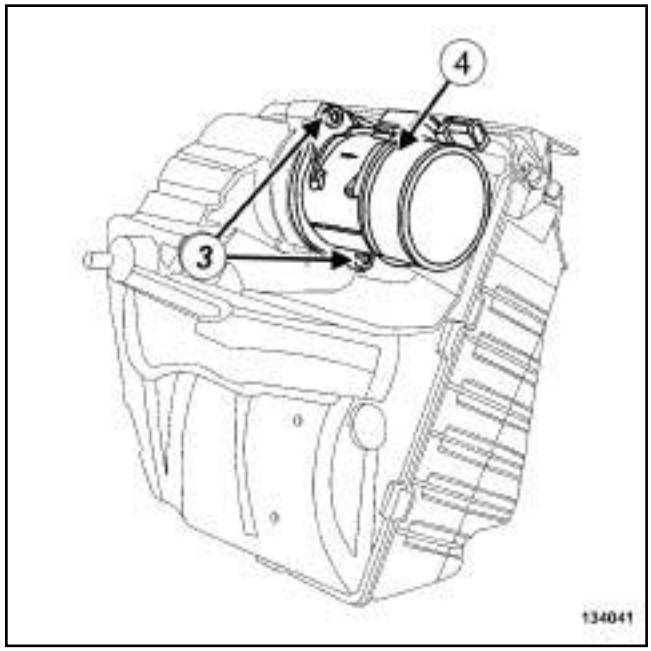

134041

❑ Remove:

- the bolts (**3**) from the air flowmeter,
- the air flowmeter (**4**) ,
- the air flowmeter seal.

K9K

REFITTING

I - REFITTING PREPARATION OPERATION

❏ **parts always to be replaced: Air flowmeter seal (11,04,06,26)**.

II - REFITTING OPERATION FOR PART CONCERNED

❏ Refit the air flowmeter, fitted with a new seal.

❏ Connect the air flowmeter connector.

III - FINAL OPERATION

❏ Fit the air filter unit air outlet pipe.

❏ Connect the air filter box air outlet pipe to the air flowmeter.

❏ Torque tighten the **air filter box air outlet pipe clip on the air flowmeter (5.5 N.m)**.

K9K, and 834

❏ Apply the after repair procedure using the **diagnostic tool** :

- connect the **diagnostic tool**,
- Select "Injection computer",
- go to repair mode,
- display the "After repair procedure" for the computer selected,
- select "Air flowmeter" in the "List of components stored by this computer" section,
- carry out the operations described in the "After repair procedure" section.

F9Q

Essential equipment
diagnostic tool

Tightening torques ▽	
air flowmeter	**4 N.m**

REMOVAL

I - REMOVAL PREPARATION OPERATION

❑ Remove:

- the engine cover,
- the windscreen wiper arms (see **Windscreen wiper arm: Removal - Refitting**) (85A, Wiping - Washing),
- the scuttle panel grille (see **Scuttle panel grille: Removal - Refitting**) (56A, Exterior equipment),
- the scoop under the scuttle panel grille (see **Scoop under scuttle panel grille: Removal - Refitting**) (56A, Exterior equipment).

II - OPERATION FOR REMOVAL OF PART CONCERNED

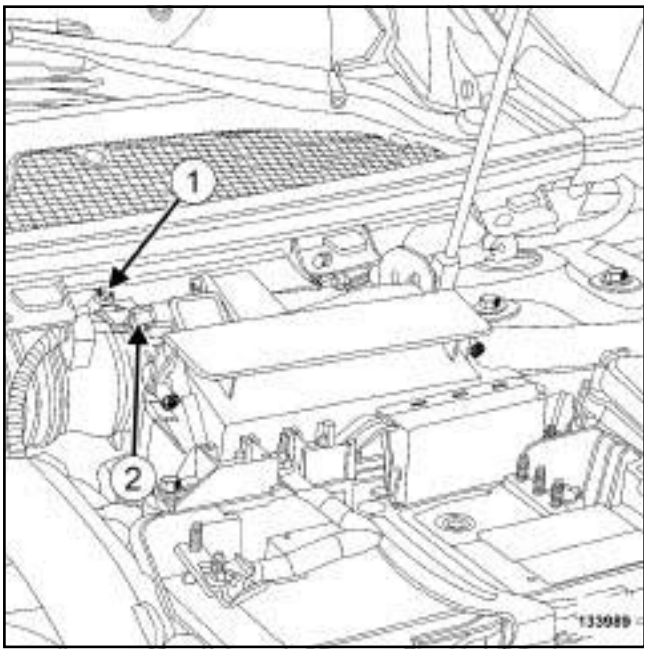

133989

❑ Loosen the clip (**1**) of the air outlet pipe on the air filter unit.

❑ Disconnect the air outlet pipe from the air filter unit.

❑ Disconnect the air flowmeter connector (**2**) .

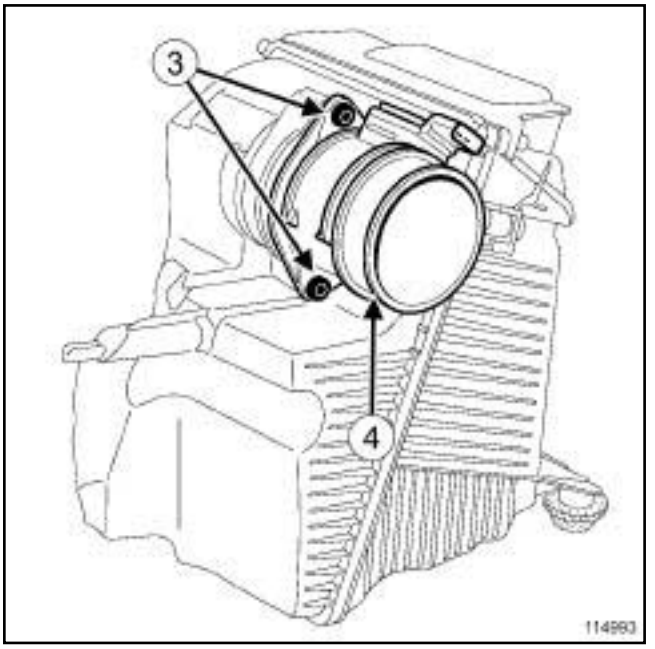

114993

❑ Remove:

- the bolts (**3**) from the air flowmeter,
- the air flowmeter (**4**) .
- the air flowmeter seal.

REFITTING

I - REFITTING PREPARATION OPERATION

❑ **parts always to be replaced: Air flowmeter seal (11,04,06,26)**.

II - REFITTING OPERATION FOR PART CONCERNED

❑ Refit:

- a new seal on the air flowmeter,
- the air flowmeter.

❑ Torque tighten the **air flowmeter (4 N.m)**.

❑ Connect the air outlet pipe of the air filter unit.

❑ Connect the air flowmeter connector.

III - FINAL OPERATION

❑ Refit:

- the scoop under the scuttle panel grille (see **Scoop under scuttle panel grille: Removal - Refitting**) (56A, Exterior equipment),
- the scuttle panel grille (see **Scuttle panel grille: Removal - Refitting**) (56A, Exterior equipment),

F9Q

- the windscreen wiper arms (see **Windscreen wiper arm: Removal - Refitting**) (85A, Wiping - Washing),
- the engine cover.

❑ Apply the after repair procedure using the **diagnostic tool** :

- connect the diagnostic tool,
- select « Injection computer » ,
- go to repair mode,
- display the « before/after repair procedure » for the computer selected,
- select « Air flowmeter » in the « List of components stored by this computer » section,
- carry out the operations described in the « After repair procedure » section.

K9K, and 832 or 834

Tightening torques ▽	
intercooler air outlet pipe clip on the damper valve	**5.5 N.m**

REMOVAL

I - REMOVAL PREPARATION OPERATION

❏ Remove the front engine cover.

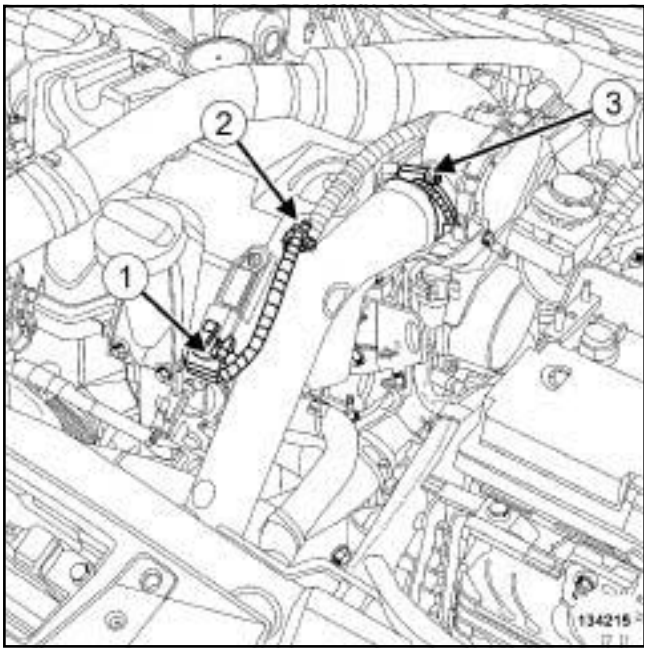

134215

❏ Disconnect the turbocharger pressure sensor connector (**1**) .

❏ Unclip the turbocharger pressure sensor wiring (**2**) from the intercooler air outlet pipe.

❏ Loosen the intercooler air outlet pipe clip (**3**) on the damper valve.

❏ Disconnect the intercooler air outlet pipe from the damper valve.

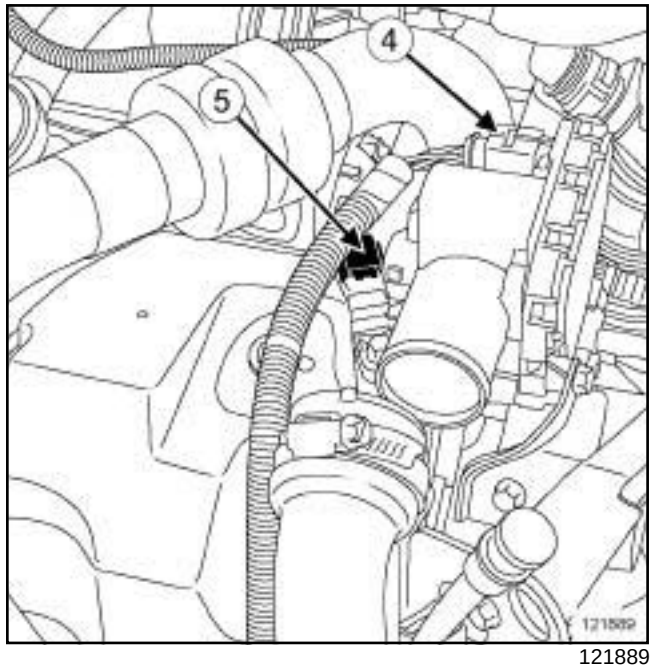

121889

❏ Disconnect:

- the damper valve connector (**4**) ,
- the connector (**5**) from the camshaft position sensor.

❏ Unclip the damper valve wiring from the injector rail protector cover.

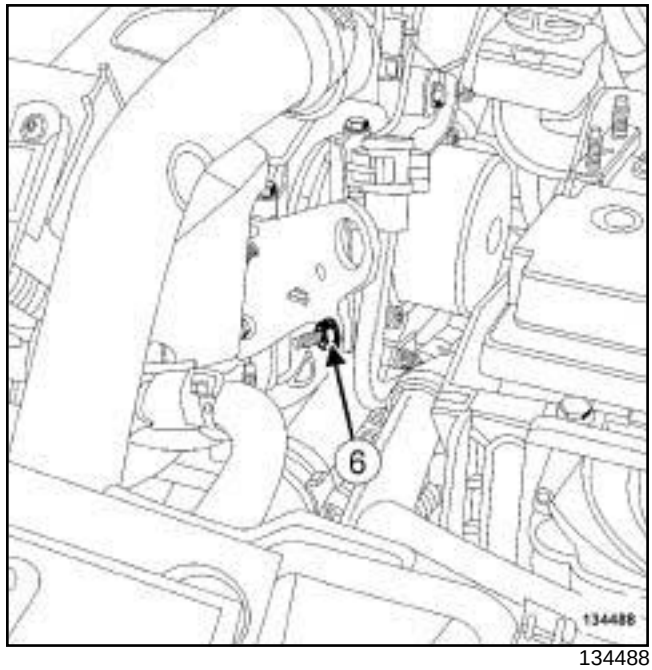

134488

❏ Remove the breather support nut (**6**) from the manual gearbox.

❏ Separate the manual gearbox breather with its support.

K9K, and 832 or 834

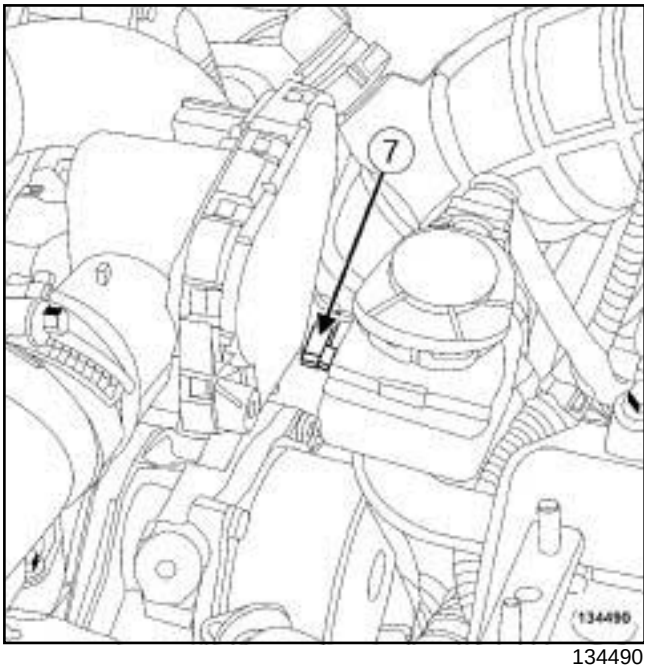

134490

❑ Disconnect the brake servo pipe union (**7**) from the vacuum pump.

II - OPERATION FOR REMOVAL OF PART CONCERNED

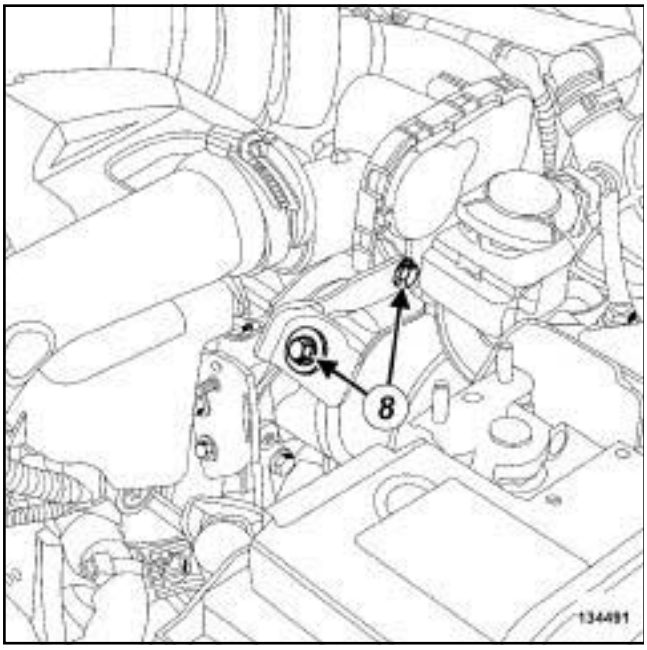

134491

❑ Remove:

- the damper valve bracket bolts (**8**) ,
- the damper valve bracket.

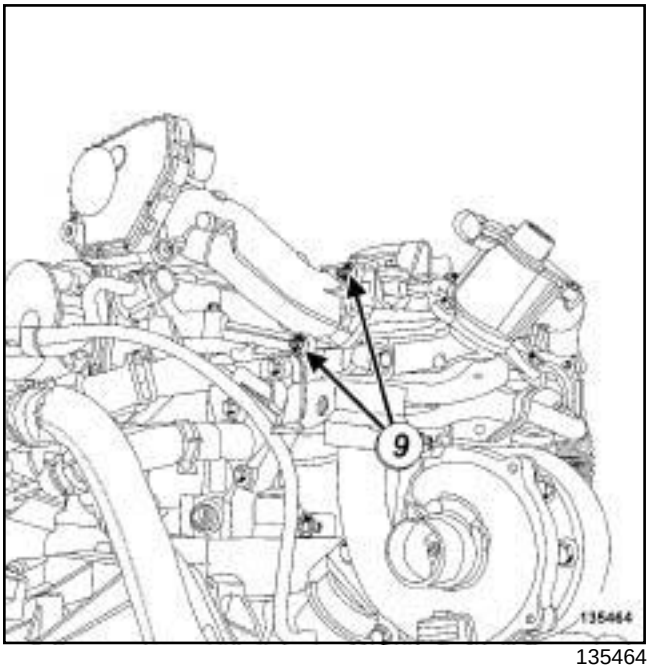

135464

❑ Remove:

- the damper valve bolts (**9**) ,
- the damper valve,
- the damper valve seal.

REFITTING

I - REFITTING PREPARATION OPERATION

❑ **parts always to be replaced: Damper valve seal (11,01,10,04)**.

❑ Use **SURFACE CLEANER** (see **Vehicle: Parts and ingredients for the repairwork**) (04B, Consumables - Products) to clean and degrease the joint faces:

- of the exhaust gas recirculation support on the flywheel end,
- the damper valve if it is to be reused.

II - REFITTING OPERATION FOR PART CONCERNED

❑ Refit:

- a new damper valve seal,
- the damper valve,
- the damper valve bracket.

K9K, and 832 or 834

III - FINAL OPERATION

- ❏ Connect the brake servo pipe union to the vacuum pump.
- ❏ Fit the manual gearbox breather to its support.
- ❏ Refit the gearbox breather mounting nut.
- ❏ Clip the damper valve wiring onto the injector rail protector cover.
- ❏ Connect:
  - the camshaft position sensor connector,
  - the damper valve connector,
  - the intercooler outlet air pipe on the damper valve.
- ❏ Torque tighten the **intercooler air outlet pipe clip on the damper valve (5.5 N.m)**.
- ❏ Clip the turbocharger pressure sensor wiring onto the intercooler air outlet pipe.
- ❏ Connect the turbocharger pressure sensor connector.
- ❏ Refit the engine cover.

F9Q

Essential equipment
diagnostic tool

Tightening torques ▽	
damper valve bolts	**10 N.m**

REMOVAL

I - REMOVAL PREPARATION OPERATION

❑ Position the vehicle on a two-post lift (see **Vehicle: Towing and lifting**) (02A, Lifting equipment).

❑ Remove:

- the engine cover,
- the engine undertray bolts,
- the engine undertray,
- the front wheels (see **Wheel: Removal - Refitting**) (35A, Wheels and tyres),
- the front section of the front wheel arch liners (see **Front wheel arch liner: Removal - Refitting**) (55A, Exterior protection),
- the front bumper (see **Front bumper: Removal - Refitting**) (55A, Exterior protection),
- the headlights (see **Front headlight: Removal - Refitting**) (80B, Headlights),
- the frontal impact cross member (see **Front impact cross member: Removal - Refitting**) (41A, Front lower structure),
- the front bumper supports (see **Front bumper support: Removal - Refitting**) (42A, Front upper structure).

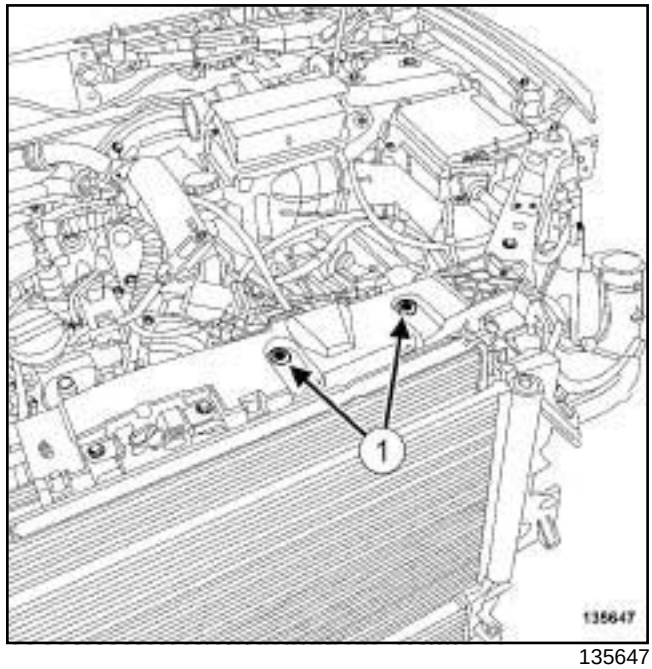

135647

❑ Remove:

- the bolts (**1**) of the engine wiring channel,
- the bonnet catch (see **Bonnet latch: Removal - Refitting**) (52A, Non-side opening element mechanisms).

F9Q

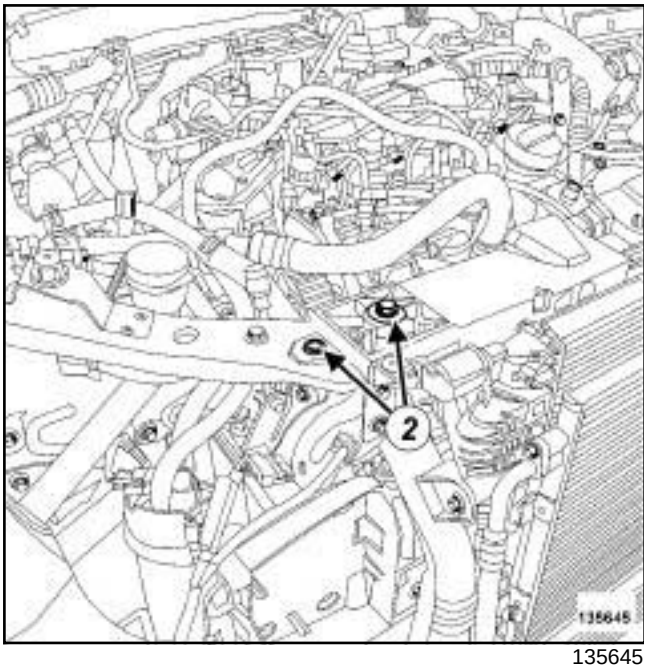

135645

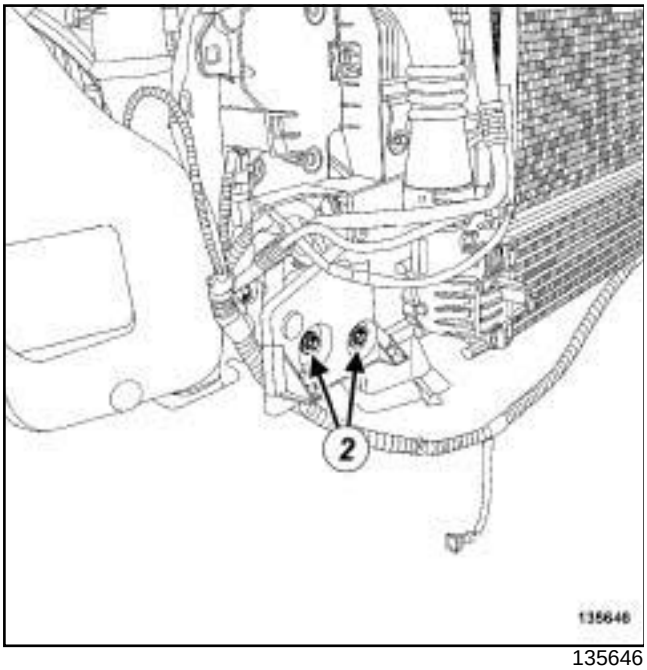

135646

❑ Remove the front end panel bolts (**2**) .

❑ Tilt the front end panel.

❑ Remove intercooler air outlet pipe (see **12B**, **Turbo-charging**, **Intercooler air outlet pipe: Removal - Refitting**, page **12B-56**) .

II - OPERATION FOR REMOVAL OF PART CONCERNED

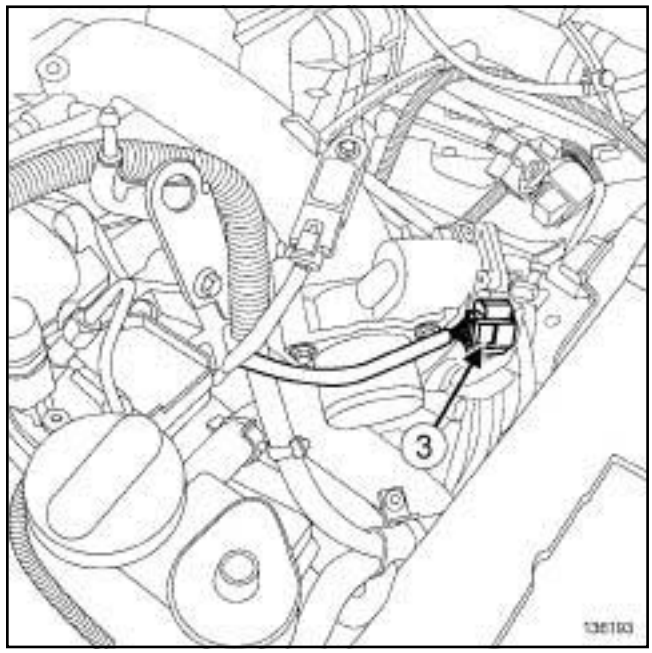

136193

❑ Disconnect the connector (**3**) from the damper valve.

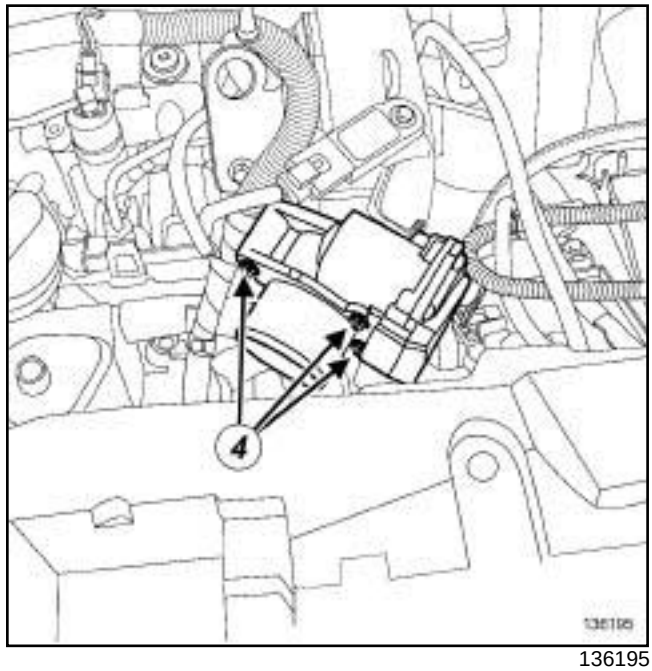

136195

❑ Remove:

- the damper valve bolts (**4**) ,
- the damper valve,
- the damper valve seal.

F9Q

REFITTING

I - REFITTING PREPARATION OPERATION

❑ Use **SURFACE CLEANER** (see **Vehicle: Parts and ingredients for the repairwork**) (04B, Consumables - Products) to clean and degrease:

- the bearing face of the damper valve in case of reuse,
- the bearing face of the air inlet pipe of the inlet manifold.

❑ **parts always to be replaced: Damper valve seal (11,01,10,04)**.

II - REFITTING OPERATION FOR PART CONCERNED

❑ Refit:

- a new seal to the damper valve,
- the damper valve.

❑ Torque tighten the **damper valve bolts (10 N.m)**.

❑ Connect the damper valve connector.

III - FINAL OPERATION

❑ Refit:

- a new intercooler air outlet pipe (see **12B**, **Turbocharging**, **Intercooler air outlet pipe: Removal - Refitting**, page **12B-56**)
- the front end panel,
- the bonnet catch (see **Bonnet latch: Removal - Refitting**) (52A, Non-side opening element mechanisms),
- the bolts of the engine wiring channel.
- the front bumper supports (see **Front bumper support: Removal - Refitting**) (42A, Front upper structure),
- the front impact cross member (see **Front impact cross member: Removal - Refitting**) (41A, Front lower structure),
- the headlights (see **Front headlight: Removal - Refitting**) (80B, Headlights),
- the front bumper (see **Front bumper: Removal - Refitting**) (55A, Exterior protection),
- the front section of the front wheel arch liners (see **Front wheel arch liner: Removal - Refitting**) (55A, Exterior protection),
- the front wheels (see **Wheel: Removal - Refitting**) (35A, Wheels and tyres),
- the engine undertray,
- the engine cover.

❑ Apply the after repair procedure using the **diagnostic tool** :

- connect the diagnostic tool,
- select « Injection computer » ,
- go to repair mode,
- display the « before/after repair procedure » for the computer selected,
- select « Damper valve» in the « List of components stored by this computer » section,
- carry out the operations described in the « After repair procedure » section.

K4M

Tightening torques ▽	
throttle valve bolts	**10 N.m**
air pipe clip on the throttle valve	**6 N.m**
air pipe clip on the air filter unit	**6 N.m**

REMOVAL

I - REMOVAL PREPARATION OPERATION

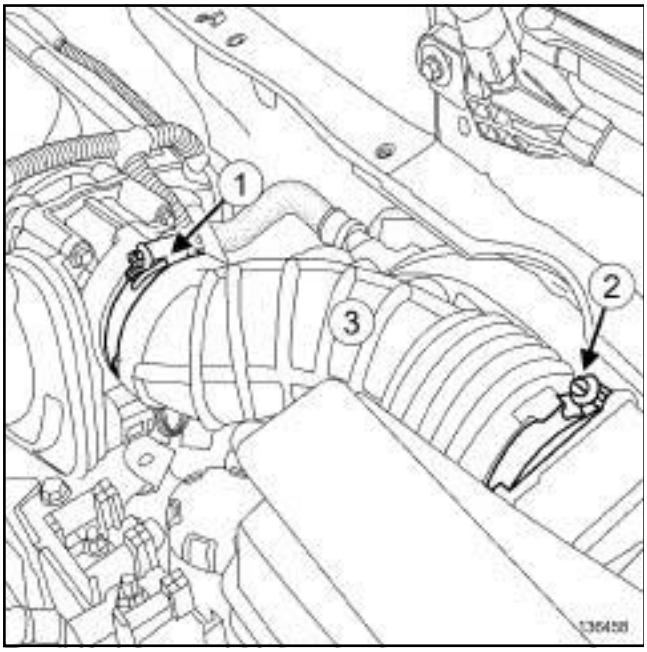

136458

❑ Remove the front engine cover.

❑ Undo:

- the clip (**1**) on the throttle valve air inlet pipe,
- the clip (**2**) on the air filter unit air outlet pipe.

❑ Disconnect the air filter unit air outlet pipe:

- from the air filter unit,
- from the throttle valve.

❑ Move the air filter unit air outlet pipe (**3**) to one side.

II - OPERATION FOR REMOVAL OF PART CONCERNED

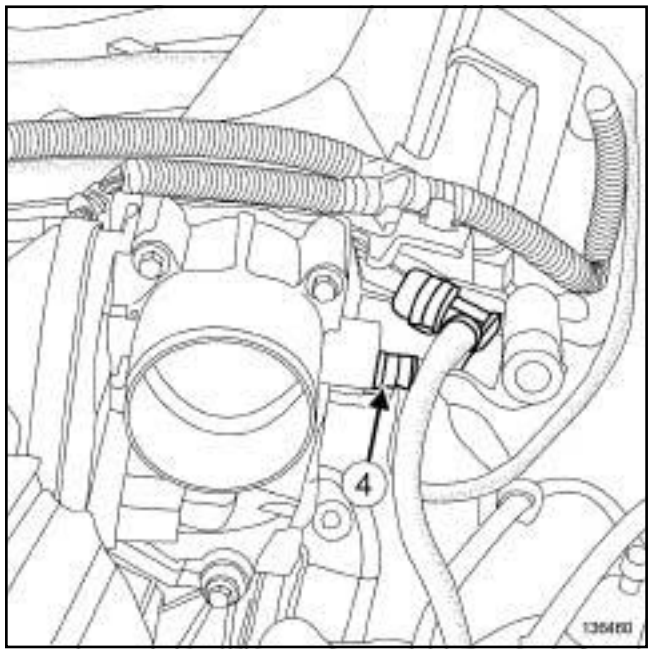

136460

❑ Disconnect the union (**4**) of the fuel vapour absorber bleed solenoid valve pipe on the throttle valve.

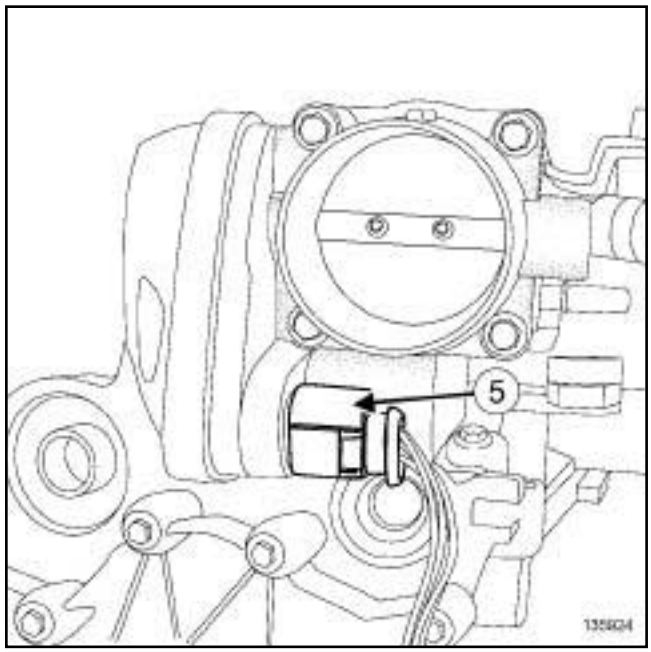

135924

❑ Disconnect the connector (**5**) from the throttle valve.

K4M

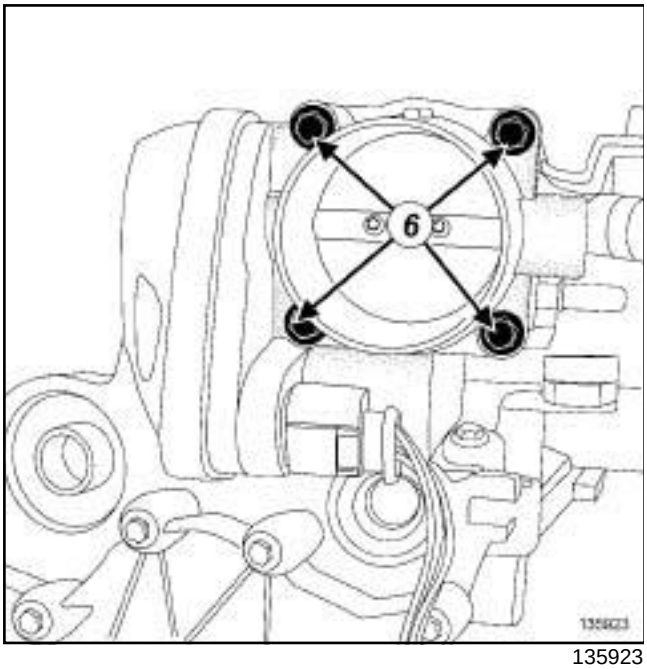

135923

❑ Remove:

- the throttle valve bolts (**6**) ,
- the throttle valve.

❑ Remove the throttle valve seal.

REFITTING

I - REFITTING PREPARATION OPERATION

❑ **parts always to be replaced: Throttle valve seal (11,04,06,25)**.

❑ Use **SURFACE CLEANER** (see **Vehicle: Parts and ingredients for the repairwork**) (04B, Consumables - Products) to clean and degrease:

- the inlet manifold joint face if reused,
- the seal housing on the inlet manifold.

WARNING
To ensure proper sealing, the joint faces must be clean, dry and not greasy (avoid any finger marks).

WARNING
Do not scrape the joint faces of the aluminium, any damage caused to the joint face will result in a risk of leaks.

II - REFITTING OPERATION FOR PART CONCERNED

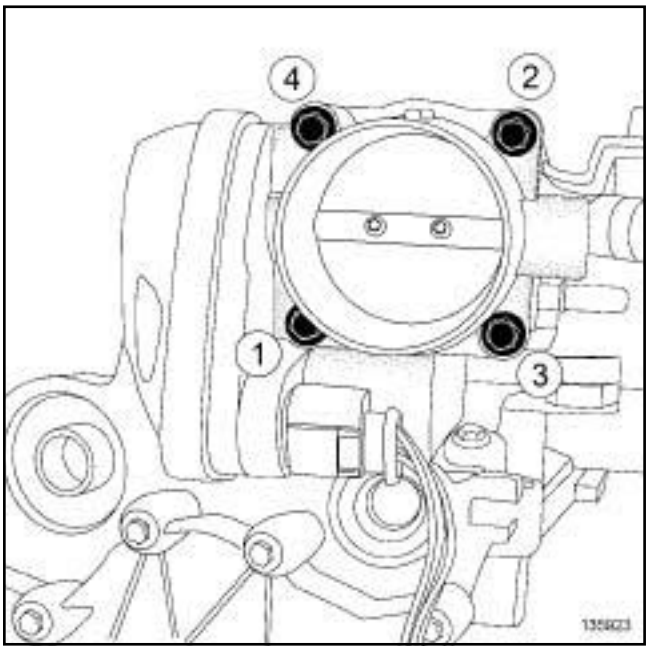

135923

❑ Refit:

- a new seal on the inlet manifold,
- the throttle valve.

❑ In order, torque tighten the **throttle valve bolts (10 N.m)**.

III - FINAL OPERATION

❑ Connect to the throttle valve:

- the union of the fuel vapour absorber bleed solenoid valve pipe on the throttle valve,
- the throttle valve connector.

❑ Fit the air filter unit air outlet pipe.

❑ Connect the air filter unit air outlet pipe:

- to air filter unit,
- to the throttle valve.

❑ Tighten to torque:

- the **air pipe clip on the throttle valve (6 N.m)**,
- the **air pipe clip on the air filter unit (6 N.m)**.

❑ Refit the engine cover.

F4R

Tightening torques ▽	
throttle valve bolts	**10 N.m**

REMOVAL

❑ Remove the front engine cover.

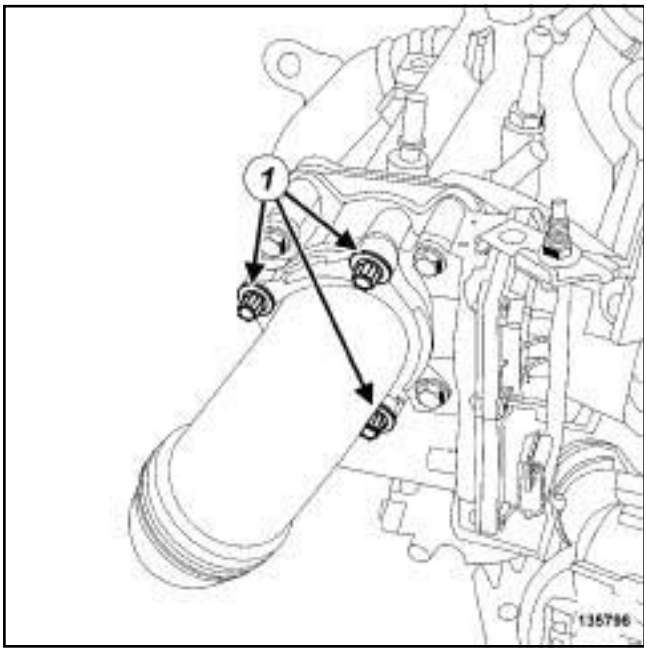

135796

❑ Remove the bolts (**1**) on the intercooler outlet air pipe.

❑ Move the intercooler outlet air pipe to one side.

OPERATION FOR REMOVAL OF PART CONCERNED

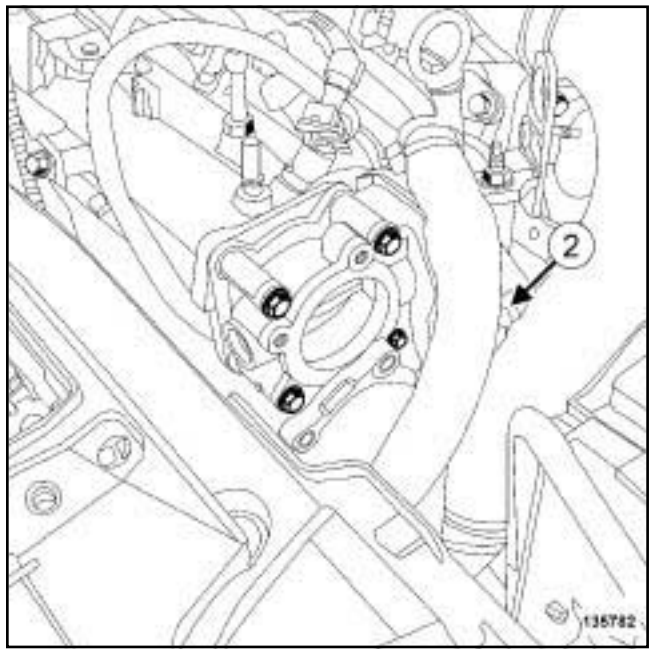

135782

❑ Disconnect the connector (**2**) from the throttle valve.

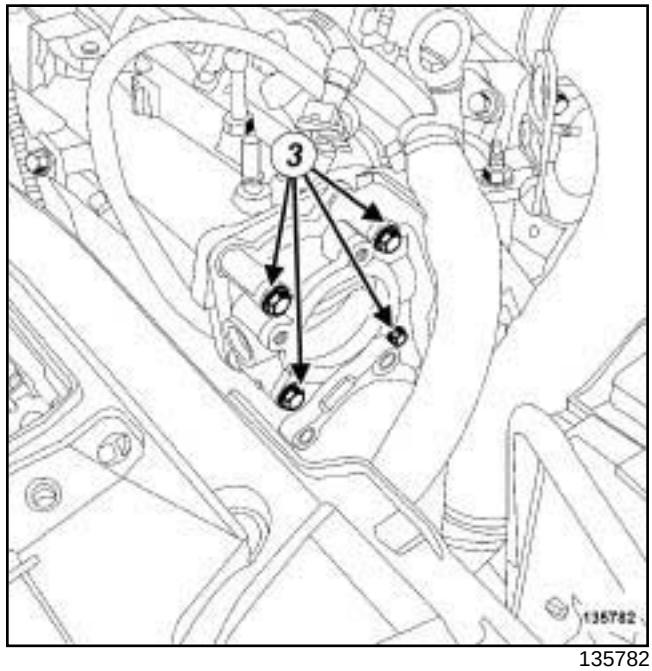

135782

❑ Remove:

- the throttle valve bolts (**3**) ,
- the throttle valve,
- the throttle valve seal.

F4R

REFITTING

I - REFITTING PREPARATION OPERATION

❏ **parts always to be replaced: Throttle valve seal (11,04,06,25)**.

II - REFITTING OPERATION FOR PART CONCERNED

❏ Refit:

- a new seal on the throttle valve,
- the throttle valve,
- the throttle valve bolts.

❏ Torque tighten the **throttle valve bolts (10 N.m)**.

❏ Connect the throttle valve connector.

III - FINAL OPERATION

❏ Fit the intercooler air outlet pipe.

❏ Refit:

- the intercooler air outlet pipe bolts,
- the engine cover.

F4R or K4M

Essential equipment
compressed air nozzle

IMPORTANT
Wear leaktight gloves (Nitrile type) for this operation.

IMPORTANT
Wear goggles with side protectors for this operation.

Note:
Be sure to work in a clean environment so as not to allow any contamination of the throttle valve.

CLEANING

I - CLEANING PREPARATION OPERATION

❑ Remove the throttle valve (see **12A**, **Fuel mixture**, **Throttle valve: Removal - Refitting**, page **12A-17**) .

II - CLEANING THE PART CONCERNED

❑

Note:
The **CARBURETTOR CLEANER** (see **Vehicle: Parts and consumables for repair**) (04B, Consumables - Products) damages the seals.

❑ Remove the throttle valve seal

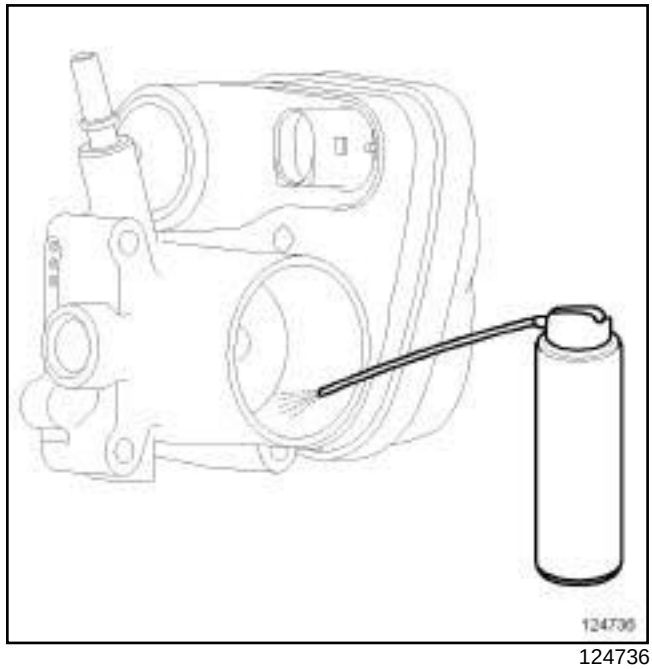

124736

❑ Hold the throttle valve flap open manually.

❑ Spray **CARBURETTOR CLEANER** (see **Vehicle: Parts and ingredients for the repairwork**) (04B, Consumables - Products) into the air vent until all traces of clogging have disappeared.

Note:
Do not spray any cleaning product onto the outside of the cylinder, inside the spring housing or onto the connector.

F4R or K4M

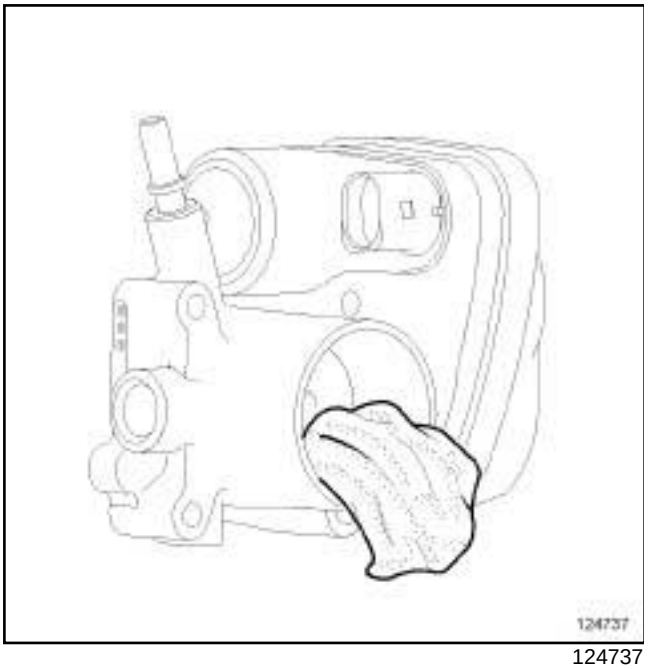

124737

❑ Remove the cleaning product and the dirt residue using lint-free **CLEANING CLOTHS**.

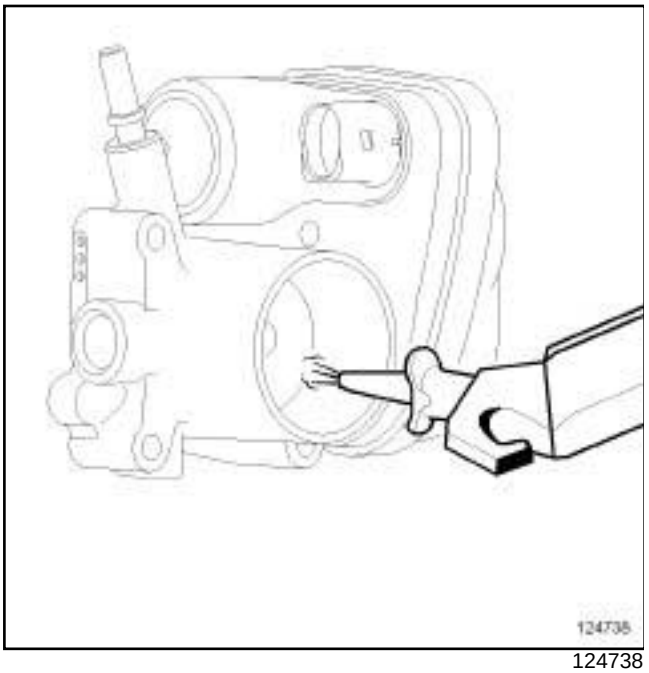

124738

❑ Use a **compressed air nozzle** to blast the throttle valve edges and the air vent.

Note:

If the throttle valve is dropped or receives any other impact, it will need to be replaced.

III - FINAL OPERATION

❑ Refit the throttle valve (see **12A**, **Fuel mixture**, **Throttle valve: Removal - Refitting**, page **12A-17**) .

K4M

Tightening torques ▽	
bolts 1 to 5 of the inlet manifold	**9 N.m**
bolts 6 to 8 of the inlet manifold	**12 N.m**

IMPORTANT

During this operation, be sure to:

- refrain from smoking or bringing red hot objects close to the working area,
- be careful of fuel splashes when disconnecting the union.

IMPORTANT

Wear leaktight gloves (Nitrile type) for this operation.

WARNING

To avoid any corrosion or damage, protect the areas on which fuel is likely to run.

WARNING

To prevent impurities from entering the circuit, place protective plugs on all fuel circuit components exposed to the open air.

REMOVAL

I - REMOVAL PREPARATION OPERATION

❑ Remove:

- the engine cover,
- the windscreen wiper arms (see **Windscreen wiper arm: Removal - Refitting**) (85A, Wiping - Washing),
- the scuttle panel grille (see **Scuttle panel grille: Removal - Refitting**) (56A, Exterior equipment),
- the scoop under the scuttle panel grille (see **Scoop under scuttle panel grille: Removal - Refitting**) (56A, Exterior equipment),
- the throttle valve (see **12A**, **Fuel mixture**, **Throttle valve: Removal - Refitting**, page **12A-17**) .

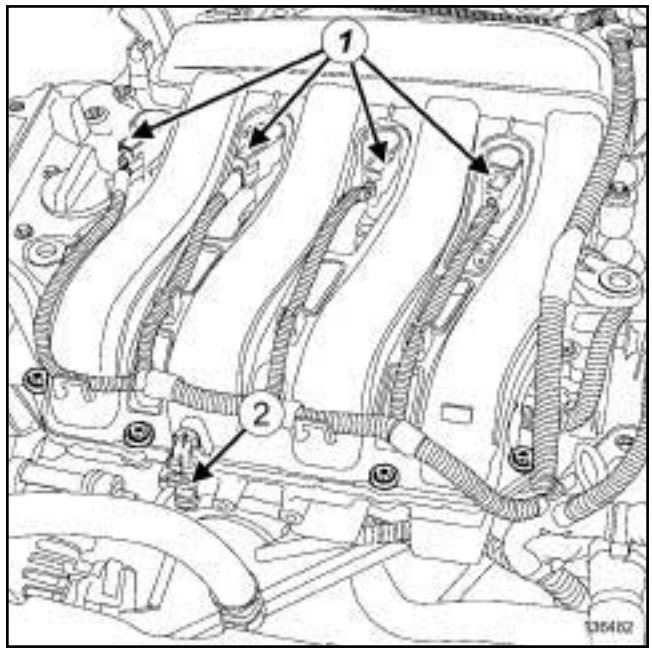

136482

❑ Disconnect:

- all coil connectors (**1**) ,
- the air temperature sensor connector (**2**) .

❑ Unclip the wiring from the inlet manifold coils.

❑ Move the coil wiring to one side.

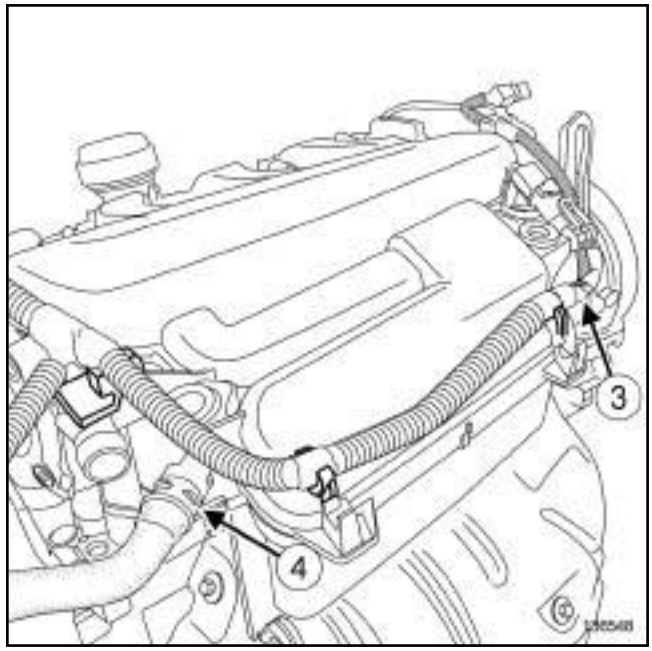

136548

❑ Disconnect the following from the inlet manifold:

- the inlet manifold pressure sensor connector (**3**) ,
- the oil vapour rebreathing hose (**4**) .

K4M

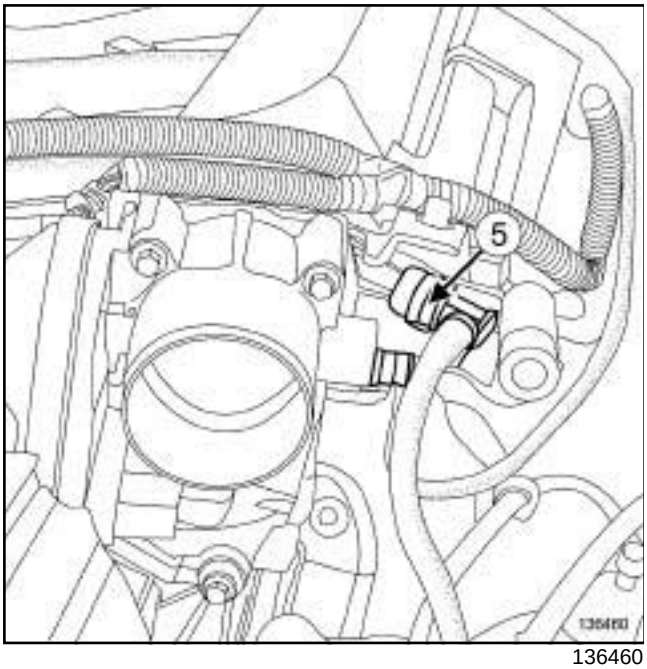

136460

❑ Disconnect the brake servo pipe union (**5**) from the inlet manifold.

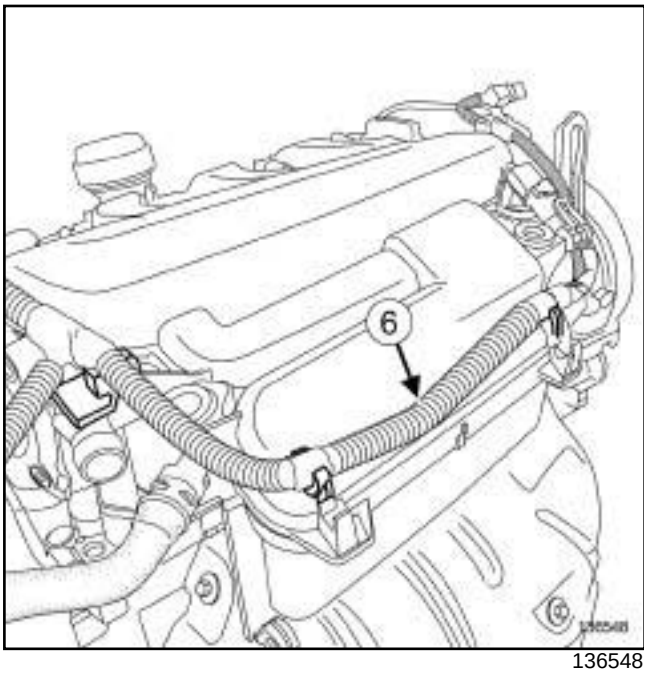

136548

❑ Unclip the following from the inlet manifold:

- the engine wiring (**6**) ,
- the fuel vapour absorber bleed solenoid valve pipe.

K4M, and 858 or 866

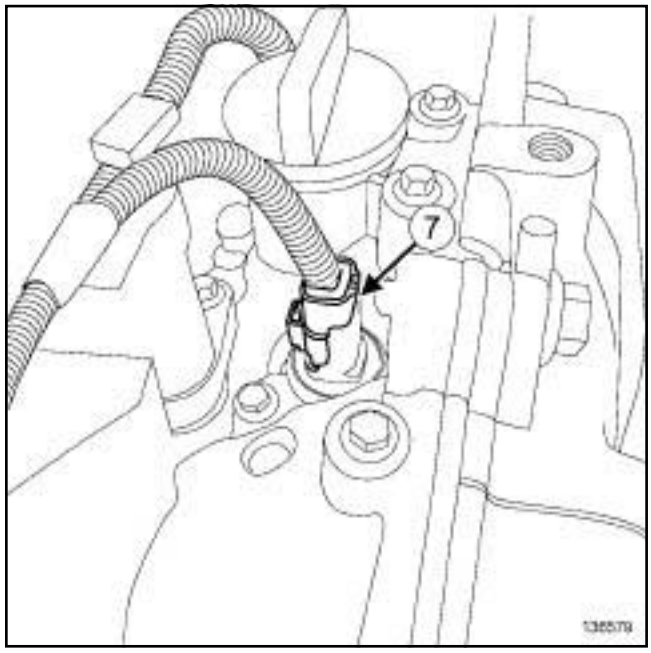

136579

❑ Disconnect the connector (**7**) from the camshaft dephaser solenoid valve.

❑ Unclip the camshaft dephaser solenoid valve wiring from the inlet manifold.

K4M

II - OPERATION FOR REMOVAL OF PART CONCERNED

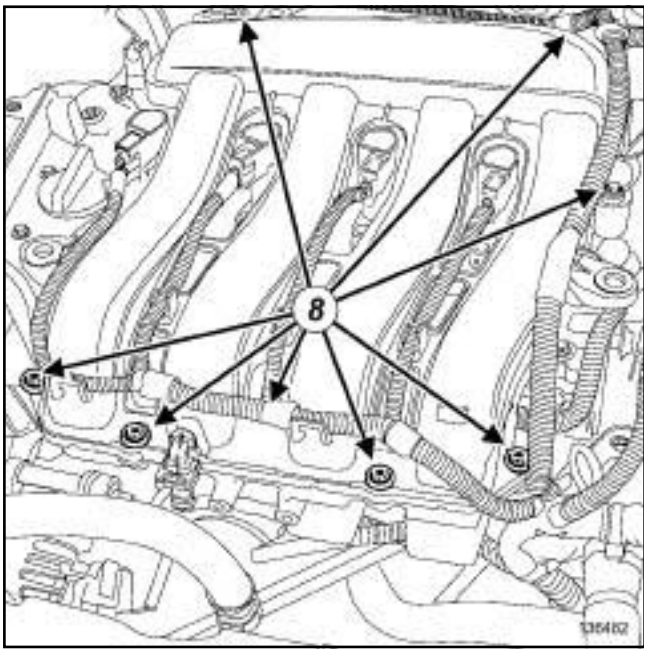

136482

❑ Remove:

- the inlet manifold bolts (**8**) ,
- the inlet manifold,
- the inlet manifold seals.

REFITTING

I - REFITTING PREPARATION OPERATION

❑ **parts always to be replaced: Intake distributor seal (10,07,01,07)**.

❑ Use **SURFACE CLEANER** (see **Vehicle: Parts and ingredients for the repairwork**) (04B, Consumables - Products) to clean and degrease:

- the housing of each inlet manifold seal,
- the seal face of the injector holder shim.

❑ Fit new seals to the inlet manifold.

❑ When replacing the inlet manifold, remove:

- the air temperature sensor,
- the inlet manifold pressure sensor.

II - REFITTING OPERATION FOR PART CONCERNED

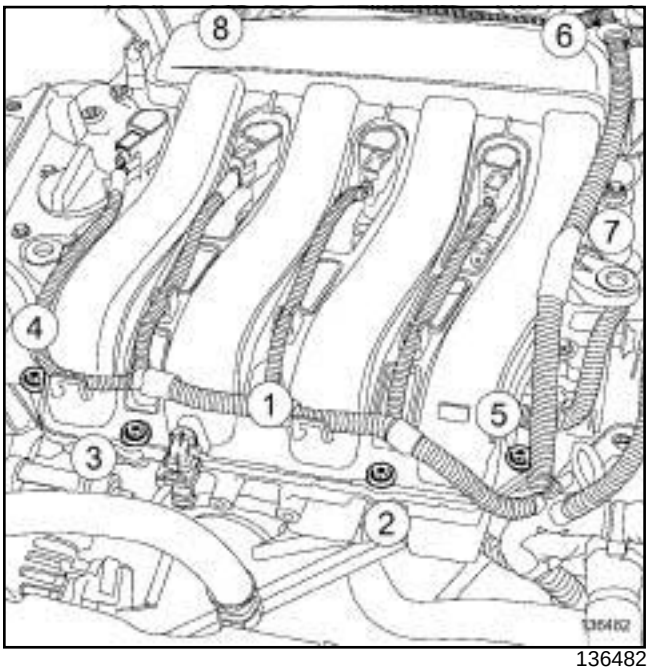

136482

❑ Refit the inlet manifold.

❑ Tighten to torque and in order:

- **bolts 1 to 5 of the inlet manifold (9 N.m)**,
- **bolts 6 to 8 of the inlet manifold (12 N.m)**.

III - FINAL OPERATION

K4M, and 858 or 866

❑ Clip the camshaft dephaser solenoid valve wiring onto the inlet manifold.

❑ Connect the camshaft dephaser solenoid valve connector.

❑ Connect the following to the inlet manifold:

- the brake servo pipe union,
- the oil vapour rebreathing hose,
- the inlet manifold pressure sensor connector.

❑ Clip the following onto the inlet manifold:

- the engine wiring,
- the fuel vapour absorber bleed solenoid valve pipe.

❑ Fit the coil wiring.

❑ Clip the coil wiring onto the inlet manifold.

K4M

❑ Connect:

- the connector of each coil,
- the air temperature sensor connector.

❑ Refit:

- the throttle valve (see **12A**, **Fuel mixture**, **Throttle valve: Removal - Refitting**, page **12A-17**) ,
- the scoop under the scuttle panel grille (see **Scoop under scuttle panel grille: Removal - Refitting**) (56A, Exterior equipment),
- the scuttle panel grille (see **Scuttle panel grille: Removal - Refitting**) (56A, Exterior equipment),
- the windscreen wiper arms (see **Windscreen wiper arm: Removal - Refitting**) (85A, Wiping - Washing),
- the engine cover.

F4R

Tightening torques ▽	
injector rail bolts	**10 N.m**
throttle valve bolts	**10 N.m**
inlet manifold bolts	**25 N.m**
cylinder head mounting bolt on the inlet manifold	**62 N.m**

IMPORTANT

During this operation, be sure to:

- refrain from smoking or bringing red hot objects close to the working area,
- be careful of fuel splashes when disconnecting the union.

IMPORTANT

Wear leaktight gloves (Nitrile type) for this operation.

WARNING

To prevent impurities from entering the circuit, place protective plugs on all fuel circuit components exposed to the open air.

REMOVAL

I - REMOVAL PREPARATION OPERATION

❑ Remove the front engine cover.

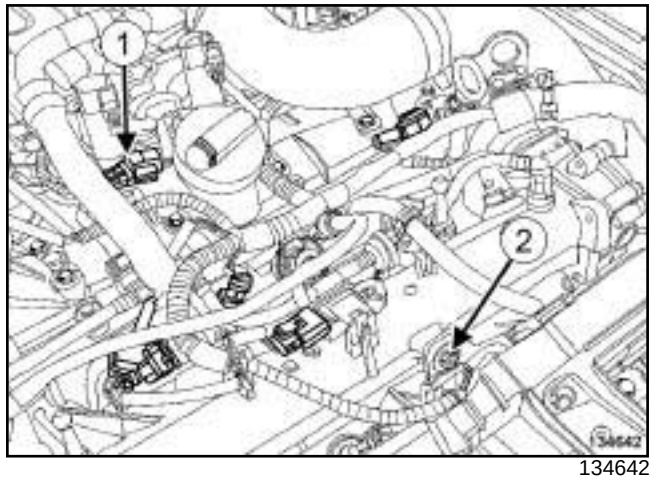

134642

❑ Remove:

- the oil vapour rebreathing pipe (**1**) ,
- the retaining bolt (**2**) from the intercooler air outlet pipe.

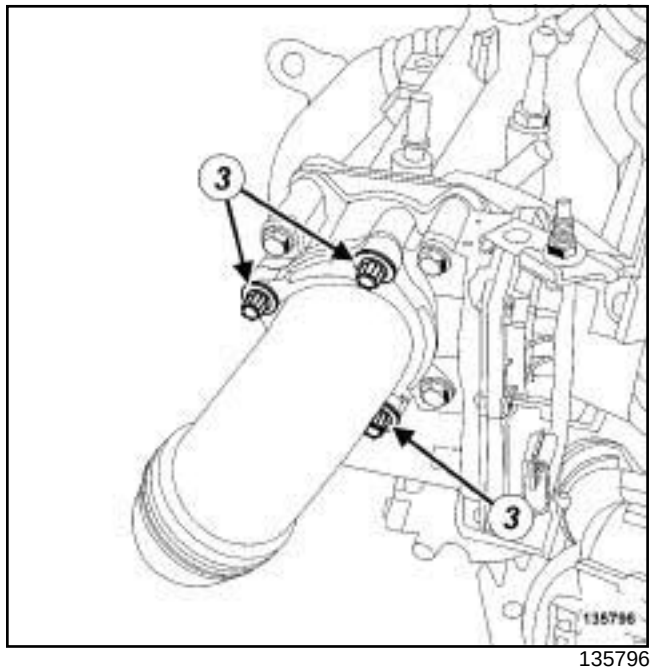

135796

❑ Remove the bolts (**3**) on the intercooler outlet air pipe.

F4R

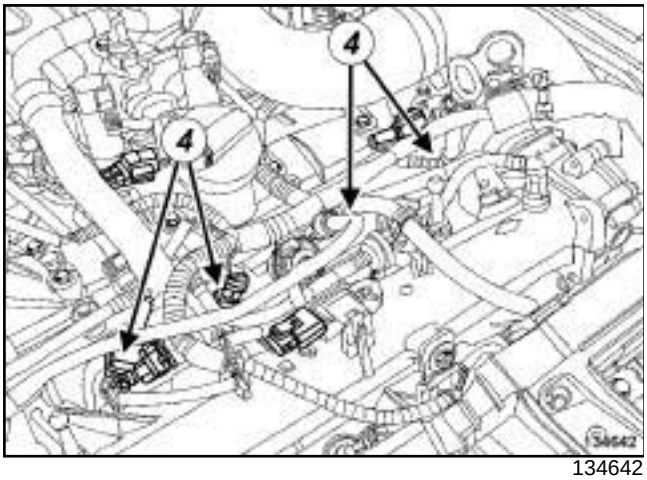

134642

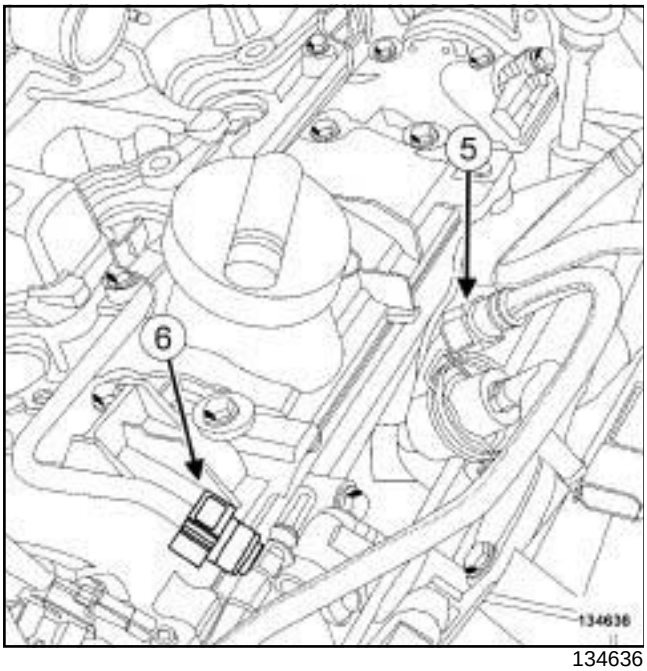

134636

❑ Disconnect:

- the injector connectors (**4**) ,
- the injector rail fuel supply pipe (**5**) ,
- the petrol vapour rebreathing pipe (**6**) .

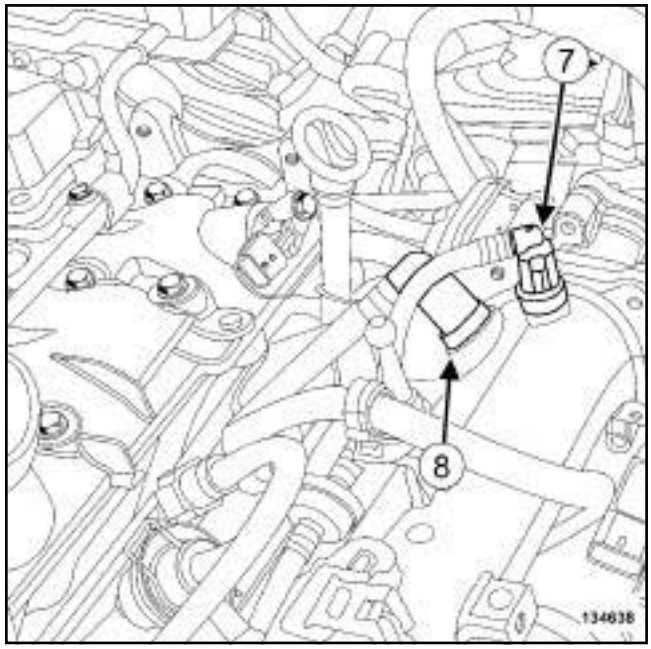

134638

❑ Disconnect:

- the oil vapour rebreathing pipe (**7**) ,
- the brake servo vacuum pipe (**8**) .

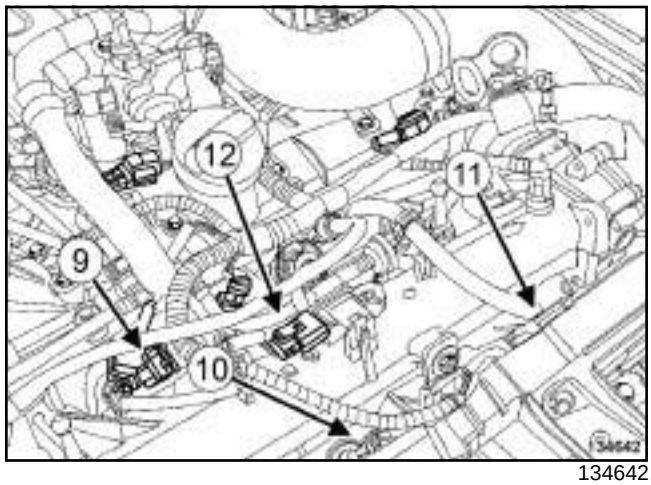

134642

❑ Disconnect:

- the oil vapour rebreathing solenoid valve connector (**9**) ,
- the air temperature sensor connector (**10**) on the intercooler air outlet pipe,
- the pressure sensor connector (**11**) at the intercooler outlet,
- the pressure sensor connector (**12**) on the inlet manifold.

F4R

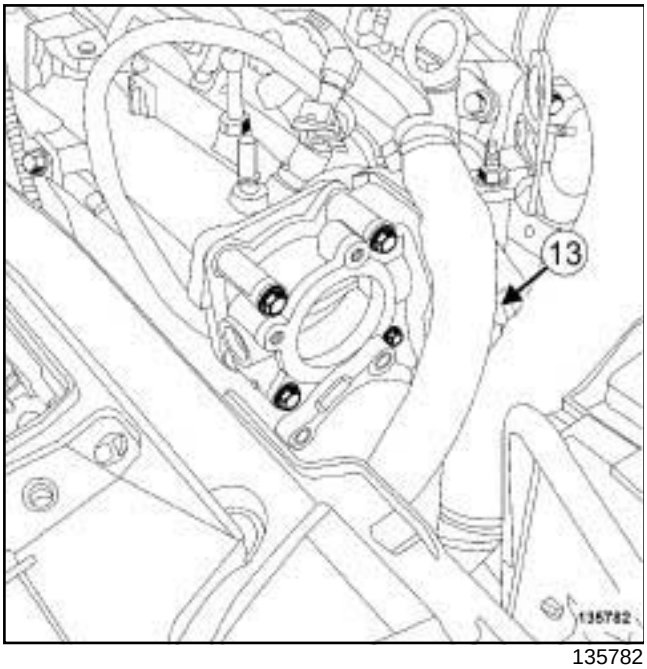

135782

❑ Disconnect the connector (**13**) from the throttle valve.

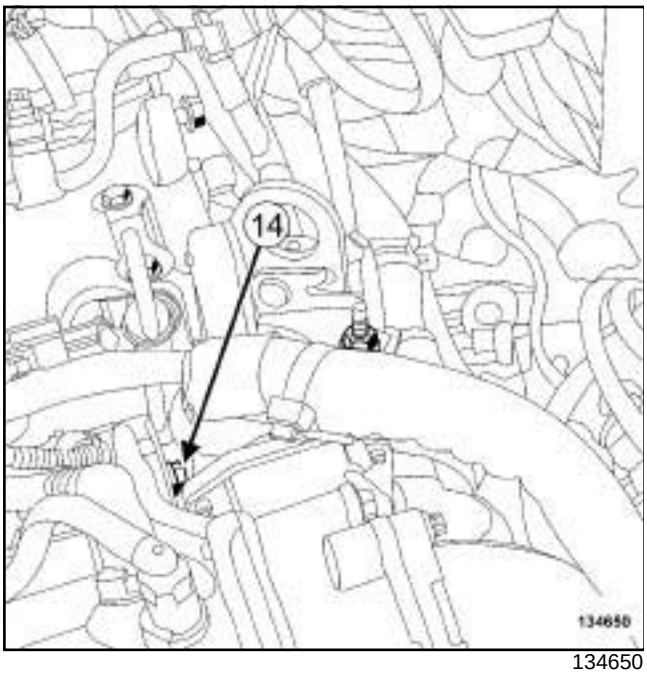

134650

❑ Remove the dipstick guide bolt (**14**) .

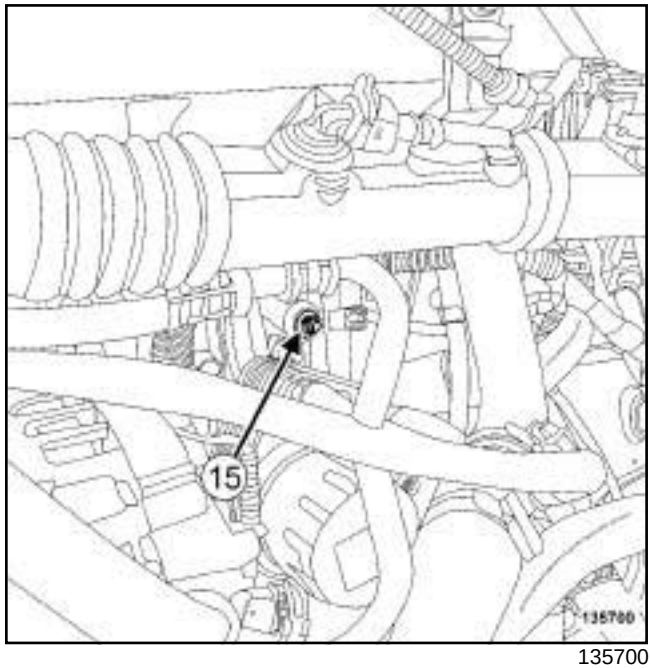

135700

❑ Remove the bolt (**15**) from the « compressor - expansion valve » connecting pipe on the inlet manifold.

II - OPERATION FOR REMOVAL OF PART CONCERNED

❑

> Note:
>
> The inlet manifold bolts are not the same length; mark their positions.

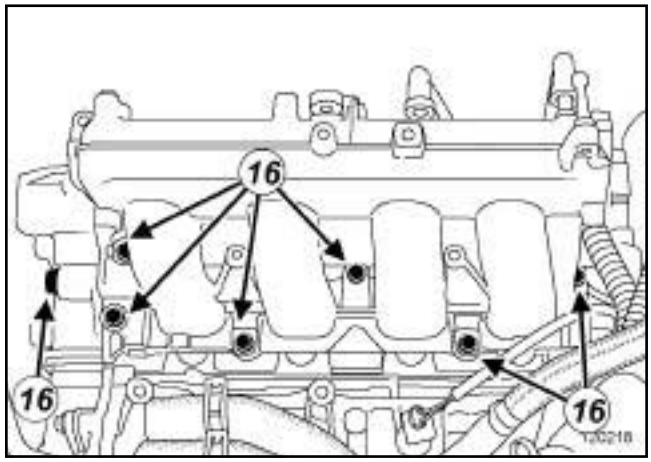

120218

❑ Remove:

- the inlet manifold bolts (**16**) ,
- the inlet manifold,
- the inlet manifold seal.

F4R

REFITTING

I - REFITTING PREPARATION OPERATION

❑ **parts always to be replaced: Intake distributor seal (10,07,01,07)**

❑ Use **SURFACE CLEANER** (see **Vehicle: Parts and ingredients for the repairwork**) (04B, Consumables - Products) to clean and degrease:

- the cylinder head joint face,
- the inlet manifold joint face if reused.

When replacing the inlet manifold

❑ Remove:

- the throttle valve bolts,
- the throttle valve,
- the throttle valve seal,
- the oil vapour heater bolt,
- the oil vapour heater,
- the oil vapour heater seals,
- the air inlet pressure sensor clip,
- the air inlet pressure sensor,
- the injector rail bolts,
- the injector rail,
- the injector seals.

❑ Always replace:

- the injector seals,
- the oil vapour heater seals,
- the throttle valve seal.

❑ Refit:

- new seals on the injectors,
- the injector rail on the new inlet manifold,
- the injector rail bolts.

❑ Torque tighten the **injector rail bolts (10 N.m)**.

❑ Refit:

- the air inlet pressure sensor,
- the air inlet pressure sensor clip,
- new seals on the oil vapour heater,
- the oil vapour heater,
- a new seal on the throttle valve,
- the throttle valve.

❑ Torque tighten the **throttle valve bolts (10 N.m)**.

II - OPERATION FOR REFITTING PART CONCERNED

❑ Refit:

- a new seal on the inlet manifold,
- the inlet manifold.

❑ Fit without tightening:

- the inlet manifold bolts,
- the cylinder head mounting bolt on the inlet manifold.

❑ Tighten to torque:

- the **inlet manifold bolts (25 N.m)**,
- the **cylinder head mounting bolt on the inlet manifold (62 N.m)**.

III - FINAL OPERATION

❑ Refit:

- the bolt from the « compressor - expansion valve » connecting pipe on the inlet manifold,
- the dipstick guide bolt,
- the bolt for the intercooler air outlet pipe.

❑ Connect:

- the throttle valve connector,
- the pressure sensor connector on the inlet manifold,
- the pressure sensor connector at the intercooler outlet,
- the air temperature sensor connector on the intercooler air outlet pipe,
- the oil vapour rebreathing solenoid valve connector,
- the brake servo vacuum pipe,
- the oil vapour rebreathing pipe,
- the petrol vapour rebreathing pipe,
- the fuel supply pipe from the injector rail,
- the injector connectors.

❑ Refit:

- the intercooler air outlet pipe bolts,
- the retaining bolt of the intercooler air outlet pipe on the inlet manifold,
- the engine cover.

K4M

Tightening torques ▽	
bolts 1 and 2 on the injector holder shim	**30 N.m**
bolts 3, 4, 5, 6, 7, 8, 9 and 10 on the injector holder shim	**25 N.m**
upper timing cover bolt	**46 N.m**
right-hand pendulum suspension bolt	**62 Nm**
dipstick guide tube bolts	**10 N.m**

REMOVAL

I - REMOVAL PREPARATION OPERATION

❑ Position the vehicle on a two-post lift (see **Vehicle: Towing and lifting**) (02A, Lifting equipment).

❑ Disconnect the battery (see **Battery: Removal - Refitting**) (80A, Battery).

❑ Remove:

- the engine cover,
- the front right-hand wheel (see **Wheel: Removal - Refitting**) (35A, Wheels and tyres),
- the front section of the front right-hand wheel arch liner (see **Front wheel arch liner: Removal - Refitting**) (55A, Exterior protection),
- the windscreen wiper arms (see **Windscreen wiper arm: Removal - Refitting**) (85A, Wiping - Washing),
- the scuttle panel grille (see **Scuttle panel grille: Removal - Refitting**) (56A, Exterior equipment),
- the scoop under the scuttle panel grille (see **Scoop under scuttle panel grille: Removal - Refitting**) (56A, Exterior equipment),
- the accessories belt (see **11A**, **Top and front of engine**, **Accessories belt: Removal - Refitting**, page **11A-7**) .

K4M, and 858 or 866

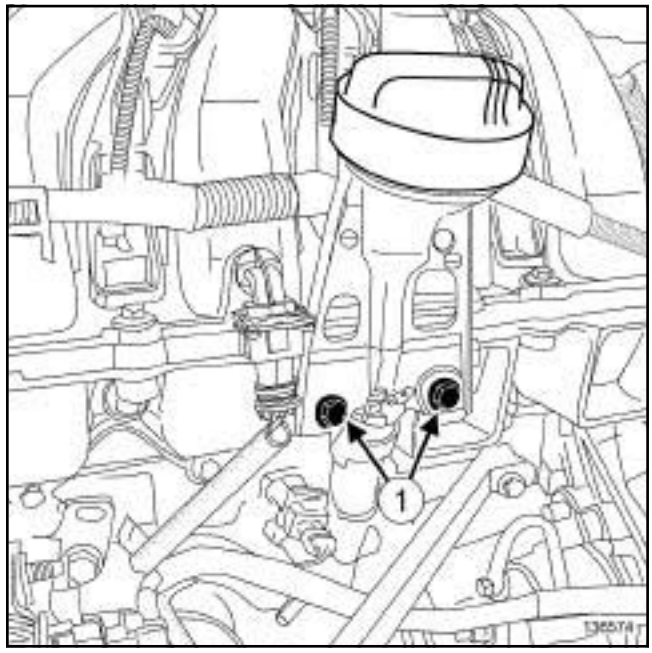

136574

❑ Remove:

- the dipstick,
- the bolts (**1**) from the dipstick tube,
- the dipstick guide.

❑ Remove:

- the throttle valve (see **12A**, **Fuel mixture**, **Throttle valve: Removal - Refitting**, page **12A-17**) ,
- the inlet manifold (see **12A**, **Fuel mixture**, **Inlet manifold: Removal - Refitting**, page **12A-23**) ,
- the « injector rail - injector» assembly (see **17B**, **Petrol injection**, **Injector rail - Injectors: Removal - Refitting**, page **17B-19**) .

K4M

II - OPERATION FOR REMOVAL OF PART CONCERNED

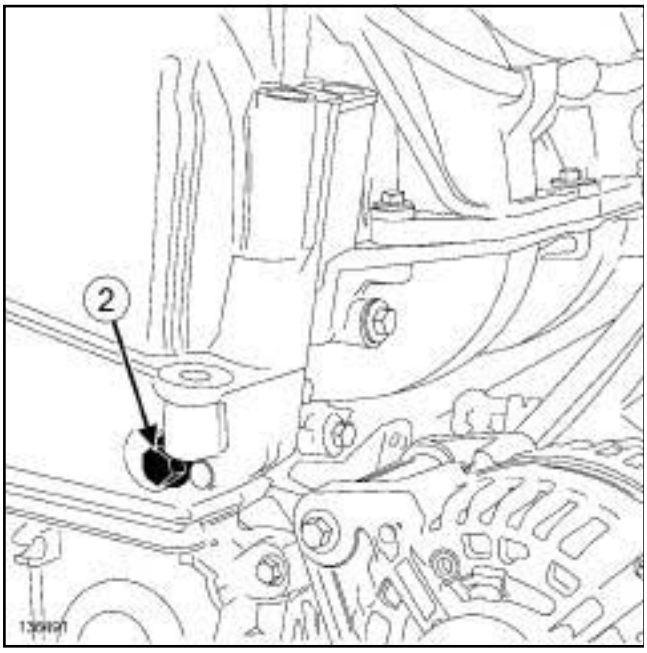

136491

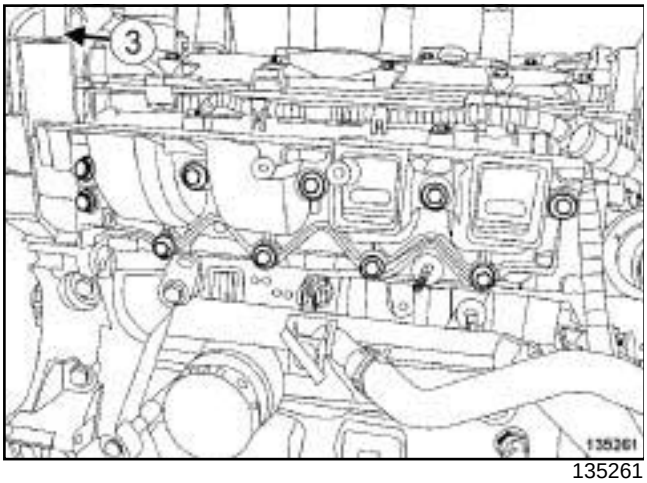

135261

❑ Remove:

- the bolt (**2**) from the upper timing cover,
- the right-hand pendulum suspension bolt (**3**) ,
- the injector holder shim bolts,
- the injector holder shim,
- the injector holder shim seal.

REFITTING

I - REFITTING PREPARATION OPERATION

❑ **parts always to be replaced: Inlet shim seal (11, 04,04,09)**.

❑ Use **SURFACE CLEANER** (see **Vehicle: Parts and ingredients for the repairwork**) (04B, Consumables - Products) to clean and degrease:

- the cylinder head joint face,
- the gasket face of the injector holder shim, in case of reuse.

> **WARNING**
> To ensure proper sealing, the gasket surfaces must be clean, dry and not greasy (avoid any finger marks).

> **WARNING**
> Do not scrape the joint faces of the aluminium, any damage caused to the joint face will result in a risk of leaks.

II - REFITTING OPERATION FOR PART CONCERNED

❑ Refit:

- a new seal on the injector holder shim,
- the injector holder shim.

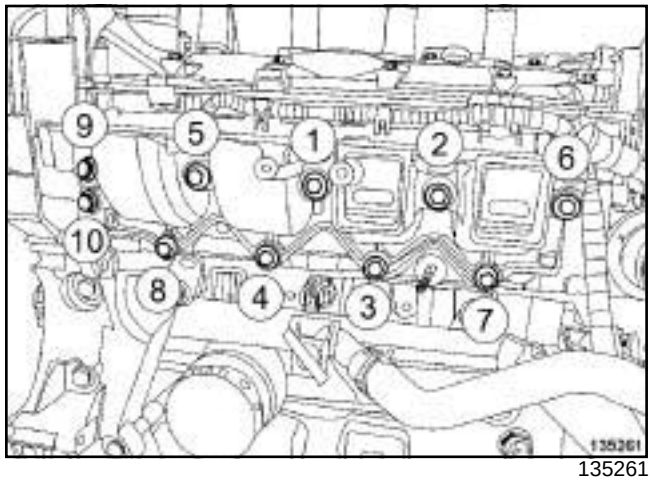

135261

❑ Fit without tightening the bolts on the injector holder shim.

❑ Tighten to torque and in order:

- **bolts 1 and 2 on the injector holder shim (30 N.m)**,
- **bolts 3, 4, 5, 6, 7, 8, 9 and 10 on the injector holder shim (25 N.m)**.

❑ Tighten to torque:

- the **upper timing cover bolt (46 N.m)**,
- the **right-hand pendulum suspension bolt (62 Nm)**.

K4M

III - FINAL OPERATION

❑ Refit:

- the « injector rail - injector» assembly (see **17B**, **Petrol injection**, **Injector rail - Injectors: Removal - Refitting**, page **17B-19**) ,
- the inlet manifold (see **12A**, **Fuel mixture**, **Inlet manifold: Removal - Refitting**, page **12A-23**) ,
- the throttle valve (see **12A**, **Fuel mixture**, **Throttle valve: Removal - Refitting**, page **12A-17**) .

K4M, and 858 or 866

❑ Refit the dipstick guide.

❑ Torque tighten the **dipstick guide tube bolts (10 N.m)**.

❑ Refit the dipstick.

❑ Refit:

- the accessories belt (see **11A**, **Top and front of engine**, **Accessories belt: Removal - Refitting**, page **11A-7**) ,
- the scoop under the scuttle panel grille (see **Scoop under scuttle panel grille: Removal - Refitting**) (56A, Exterior equipment),
- the scuttle panel grille (see **Scuttle panel grille: Removal - Refitting**) (56A, Exterior equipment),
- the windscreen wiper arms (see **Windscreen wiper arm: Removal - Refitting**) (85A, Wiping - Washing),
- the front section of the front right-hand wheel arch liner (see **Front wheel arch liner: Removal - Refitting**) (55A, Exterior protection),
- the front right-hand wheel (see **Wheel: Removal - Refitting**) (35A, Wheels and tyres),
- the engine cover.

❑ Connect the battery (see **Battery: Removal - Refitting**) (80A, Battery).

F9Q

Tightening torques ▽	
exhaust manifold - inlet manifold nuts	**33 N.m**
bolts on the right-hand lifting eye	**25 N.m**
inlet manifold air inlet pipe bolts	**25 N.m**

REMOVAL

I - REMOVAL PREPARATION OPERATION

❑ Position the vehicle on a two-post lift (see **Vehicle: Towing and lifting**) (02A, Lifting equipment).

❑ Remove:

- the engine cover,
- the engine undertray bolts,
- the engine undertray,
- the battery (see **Battery: Removal - Refitting**) (80A, Battery),
- the battery tray (see **Battery tray: Removal - Refitting**) (80A, Battery),
- the windscreen wiper arms (see **Windscreen wiper arm: Removal - Refitting**) (85A, Wiping - Washing),
- the scuttle panel grille (see **Scuttle panel grille: Removal - Refitting**) (56A, Exterior equipment),
- the scoop under the scuttle panel grille (see **Scoop under scuttle panel grille: Removal - Refitting**) (56A, Exterior equipment),
- the intercooler air inlet pipe (see **12B**, **Turbocharging**, **Intercooler air inlet pipe: Removal - Refitting**, page **12B-41**) ,
- the turbocharger outlet exhaust gas duct (see **12B**, **Turbocharging**, **Turbocharger outlet exhaust gas duct: Removal - Refitting**, page **12B-49**) ,
- the exhaust gas recirculation assembly (see **14A**, **Antipollution**, **Exhaust gas recirculation assembly: Removal - Refitting**, page **14A-18**) ,
- the lower engine tie-bar (see **19D**, **Engine mounting**, **Lower engine tie-bar: Removal - Refitting**, page **19D-33**) ,
- the turbocharger (see **12B**, **Turbocharging**, **Turbocharger: Removal - Refitting**, page **12B-8**) .

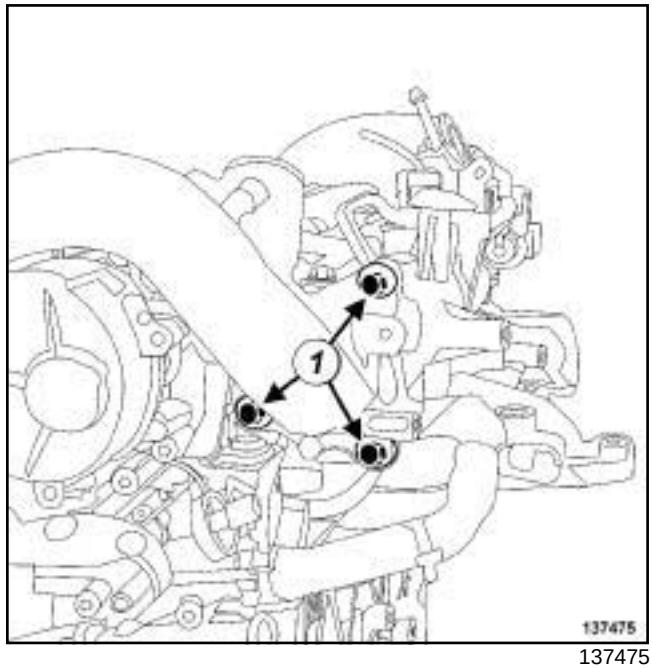

137475

❑ Remove the bolts (**1**) from the inlet manifold air inlet pipe.

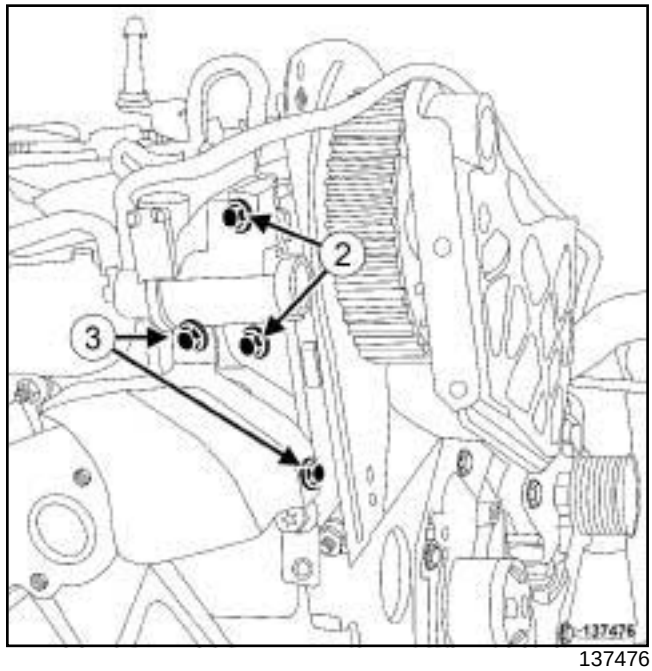

137476

❑ Remove:

- the bolts (**2**) from the turbocharger control solenoid valve,
- the turbocharger control solenoid valve,
- the bolts (**3**) from the exhaust manifold heat shield,
- the exhaust manifold heat shield.

F9Q

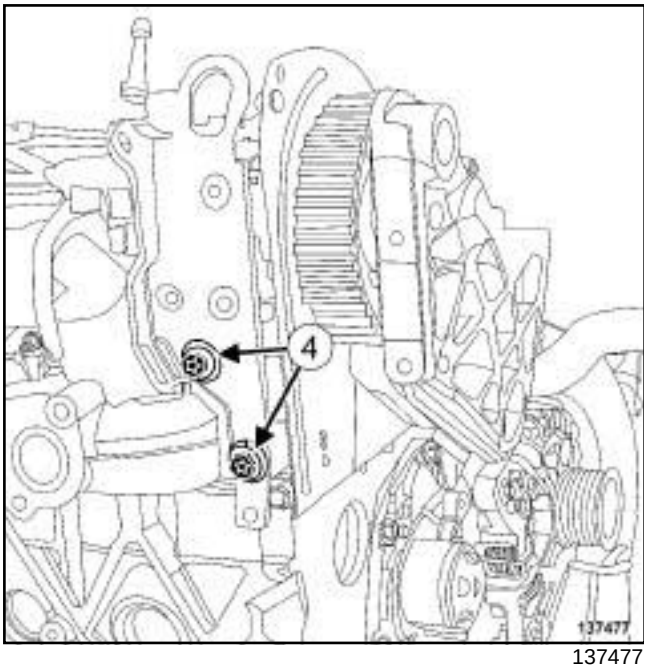

137477

❑ Remove:

- the bolts (**4**) from the lifting eye on the right-hand side,
- the lifting eye on the right-hand side.

II - OPERATION FOR REMOVAL OF PART CONCERNED

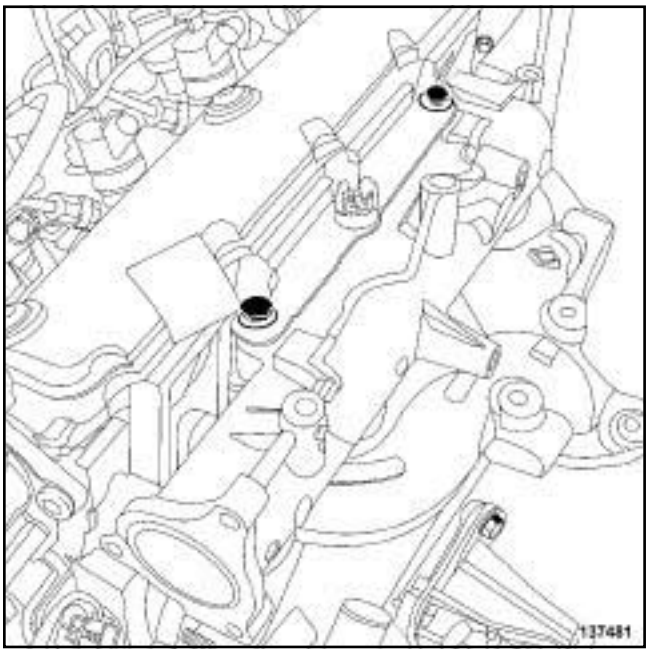

137481

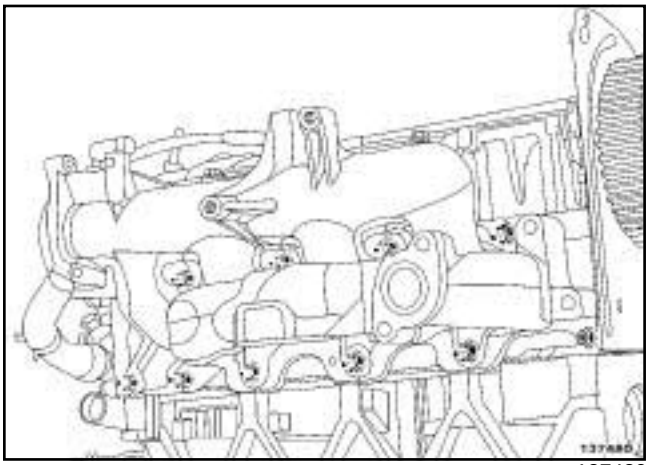

137480

❑ Remove:

- the "exhaust manifold - inlet manifold" nuts,
- the "exhaust manifold - inlet manifold",
- the seal on the "exhaust manifold - inlet manifold".

F9Q

REFITTING

I - REFITTING PREPARATION OPERATION

❑ **parts always to be replaced: exhaust gas recirculation pipe bolt (11,07,01,18)**,

parts always to be replaced: Exhaust manifold nut (10,07,02,08),

parts always to be replaced: intake distributor stud on cylinder head (if loosened) (10,07,01,08),

❑ Always replace the seal of the "exhaust manifold - inlet manifold".

II - REFITTING OPERATION FOR PART CONCERNED

❑ Apply some **FRENETANCHE** to the top of the cylinder head thread holes.

❑ Wipe any run-off after refitting the studs.

❑ Refit:

- a new seal on the exhaust manifold - inlet manifold,
- the exhaust manifold - inlet manifold.

❑ Torque tighten the **exhaust manifold - inlet manifold nuts (33 N.m)**.

III - FINAL OPERATION

❑ Refit the lifting eye on the right-hand side.

❑ Torque tighten the **bolts on the right-hand lifting eye (25 N.m)**.

❑ Refit:

- the exhaust manifold heat shield,
- the turbocharger control solenoid valve,
- the bolts on the inlet manifold air inlet pipe.

❑ Torque tighten the **inlet manifold air inlet pipe bolts (25 N.m)**.

❑ Refit:

- the turbocharger (see **12B**, **Turbocharging**, **Turbocharger: Removal - Refitting**, page **12B-8**) ,
- the lower engine tie-bar (see **19D**, **Engine mounting**, **Lower engine tie-bar: Removal - Refitting**, page **19D-33**) ,
- the exhaust gas recirculation assembly (see **14A**, **Antipollution**, **Exhaust gas recirculation assembly: Removal - Refitting**, page **14A-18**) ,
- the turbocharger outlet exhaust gas duct (see **12B**, **Turbocharging**, **Turbocharger outlet exhaust gas duct: Removal - Refitting**, page **12B-49**) ,
- the intercooler air inlet pipe (see **12B**, **Turbocharging**, **Intercooler air inlet pipe: Removal - Refitting**, page **12B-41**) ,
- the scoop under the scuttle panel grille (see **Scoop under scuttle panel grille: Removal - Refitting**) (56A, Exterior equipment),
- the scuttle panel grille (see **Scuttle panel grille: Removal - Refitting**) (56A, Exterior equipment),
- the windscreen wiper arms (see **Windscreen wiper arm: Removal - Refitting**) (85A, Wiping - Washing),
- the battery tray (see **Battery tray: Removal - Refitting**) (80A, Battery),
- the battery (see **Battery : Removal - Refitting**) (80A, Battery),
- the engine undertray,
- the engine cover.

K4M

Essential special tooling	
Mot. 1495-01	22 mm socket for removing/ refitting oxygen sensors.

Tightening torques ▽	
exhaust manifold studs	**8 N.m**
bolts of the lower heat shield12 N	**.m**
exhaust manifold nuts	**26 N.m**
bolts of the upper heat shield12 N.	**m**
exhaust manifold stay bolt	**44 N.m**
exhaust manifold stay nut44 N	**.m**
retaining bracket bolt of the heater matrix hoses10	**N.m**

REMOVAL

I - REMOVAL PREPARATION OPERATION

❑ Position the vehicle on a two-post lift (see **Vehicle: Towing and lifting**) (02A, Lifting equipment).

❑ Disconnect the battery (see **Battery: Removal - Refitting**) (80A, Battery).

❑ Remove the front engine cover.

B95 or D95

❑ Remove:

- the windscreen wiper arms (see **Windscreen wiper arm: Removal - Refitting**) (85A, Wiping - Washing),
- the scuttle panel grille (see **Scuttle panel grille: Removal - Refitting**) (56A, Exterior equipment),
- the scoop under the scuttle panel grille (see **Scoop under scuttle panel grille: Removal - Refitting**) (56A, Exterior equipment).

J95

❑ Remove:

- the centre section of the scuttle panel grille (see **Scuttle panel grille: Removal - Refitting**) (56A, Exterior equipment),
- the centre section of the scoop under the scuttle panel grille (see **Scoop under scuttle panel grille: Removal - Refitting**) (56A, Exterior equipment).

❑ Remove the throttle valve (see **12A**, **Fuel mixture**, **Throttle valve: Removal - Refitting**, page **12A-17**) .

B95 or D95

❑ Remove the coils (see **17A**, **Ignition**, **Coils Removal - Refitting**, page **17A-1**) .

❑ Remove:

- the intake distributor (see **12A**, **Fuel mixture**, **Inlet manifold: Removal - Refitting**, page **12A-23**) .
- the engine undertray bolts,
- the engine undertray,

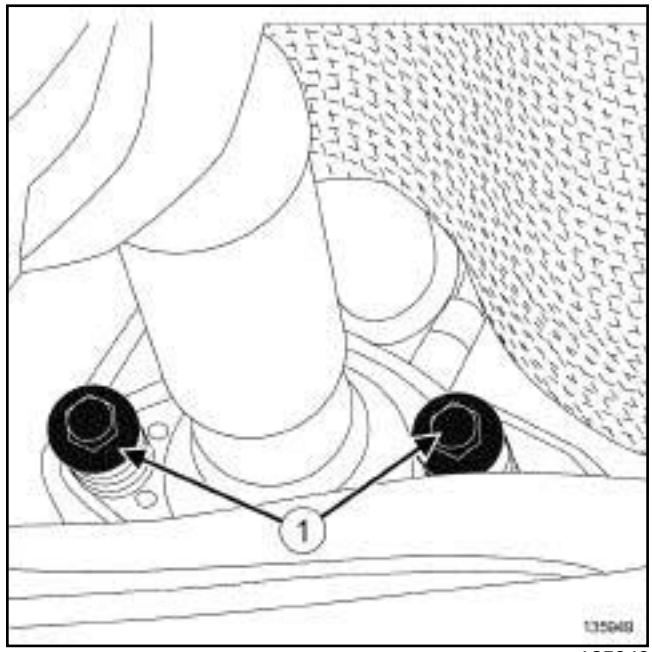

135949

❑ Remove:

- the bolts (**1**) from the exhaust flange,

- the ring between the exhaust manifold and the catalytic converter.

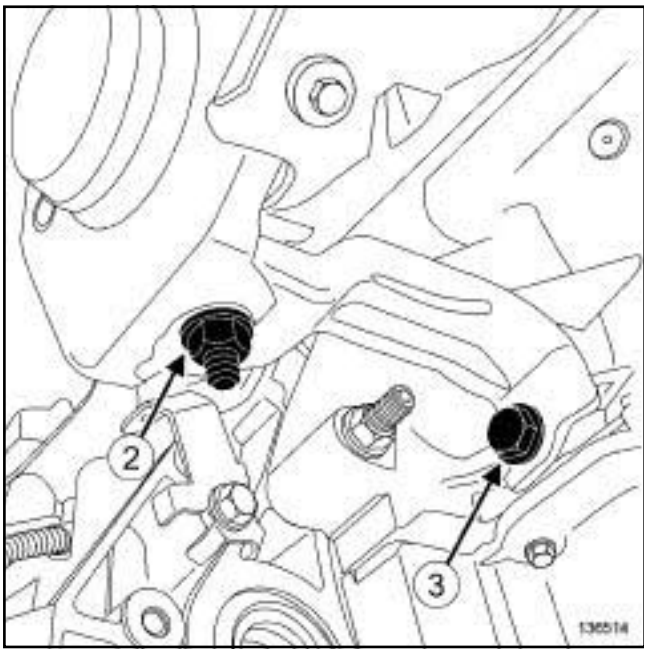

136514

❑ Remove:

- the nut (**2**) from the exhaust manifold stay,
- the bolt (**3**) from the exhaust manifold stay,
- the exhaust manifold strut.

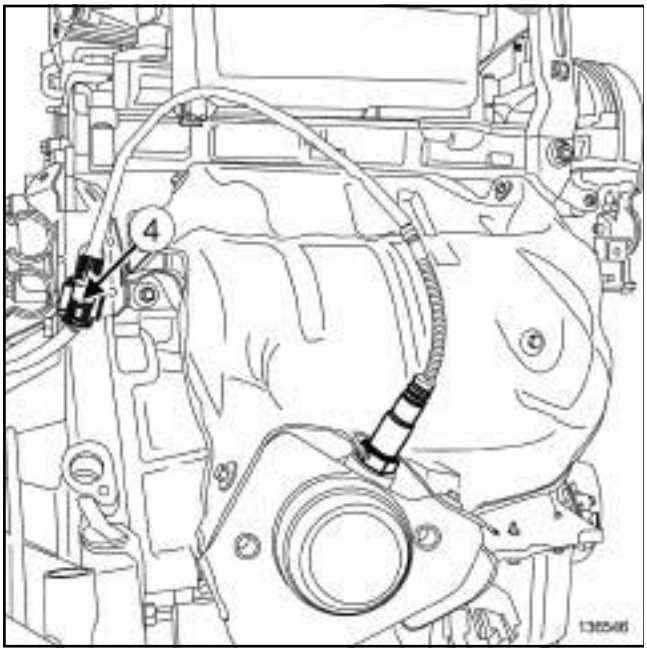

136546

❑ Disconnect the upstream oxygen sensor connector (**4**) .

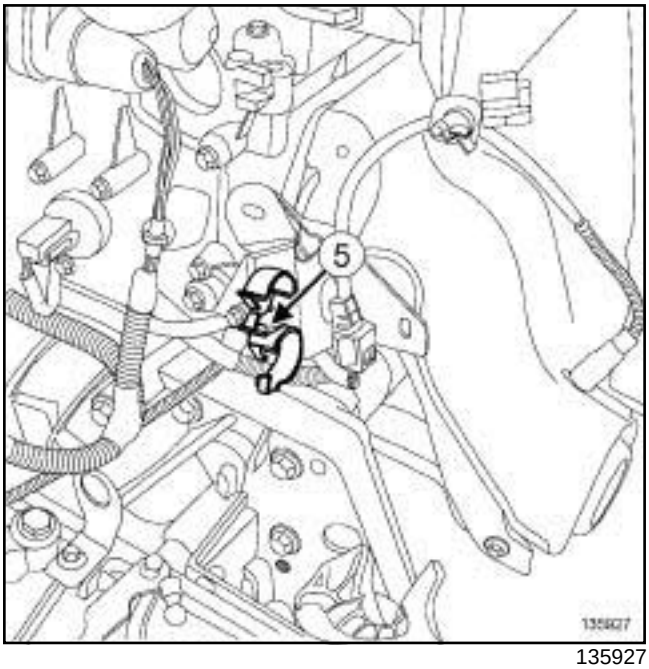

135927

❑ Unclip the heater matrix hoses from the retaining bracket (**5**) .

❑ Remove:

- the heater matrix hose retaining bracket bolt,
- the heater matrix hose retaining bracket.

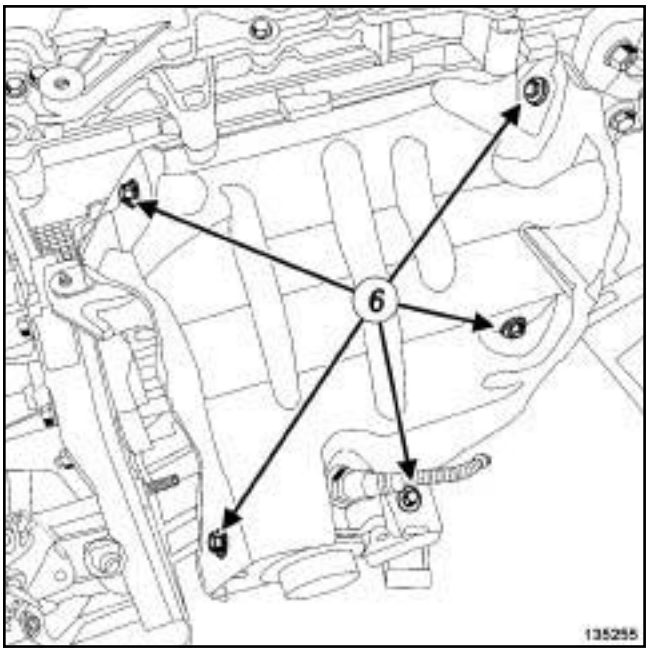

135255

❑ Remove:

- the bolts (**6**) from the upper heat shield,
- the upper heat shield.

K4M

II - OPERATION FOR REMOVAL OF PART CONCERNED

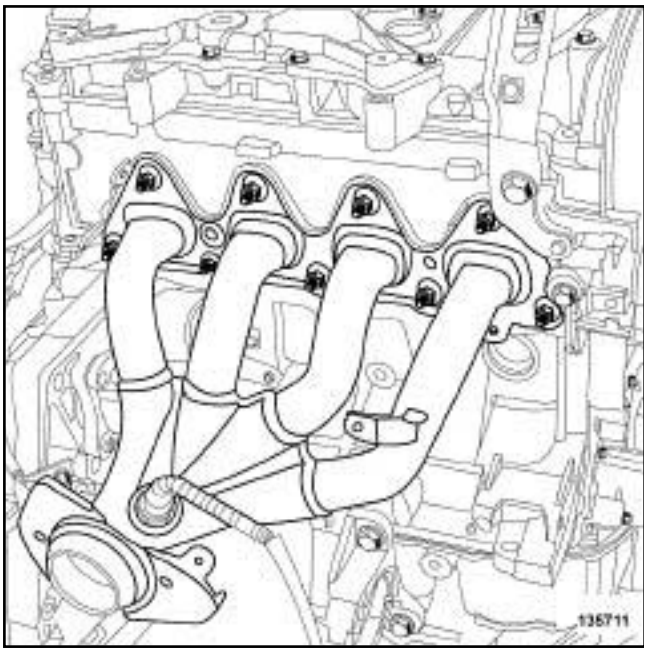

135711

❑ Remove:

- the exhaust manifold nuts,
- the exhaust manifold,
- the exhaust manifold gasket.

When replacing the exhaust manifold

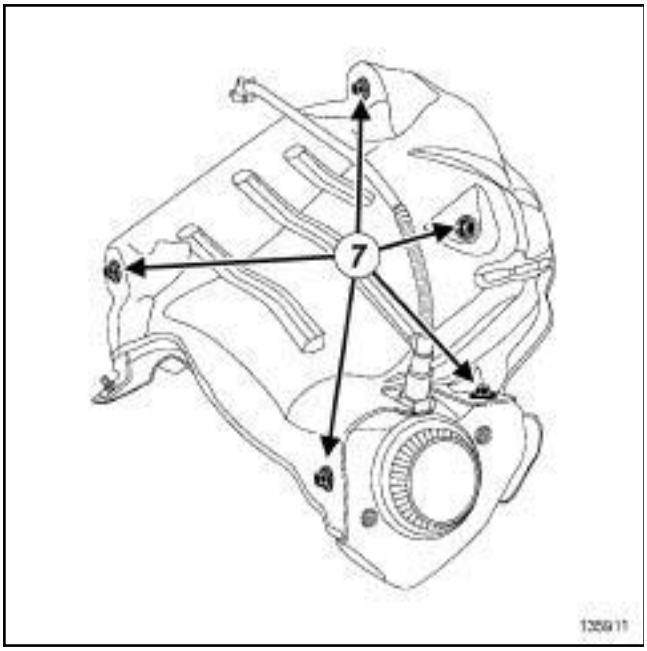

135911

❑ Remove:

- the lower heat shield bolts (**7**) ,
- the lower heat shield,
- the upstream oxygen sensor using the **(Mot. 1495-01)**.

REFITTING

I - REFITTING PREPARATION OPERATION

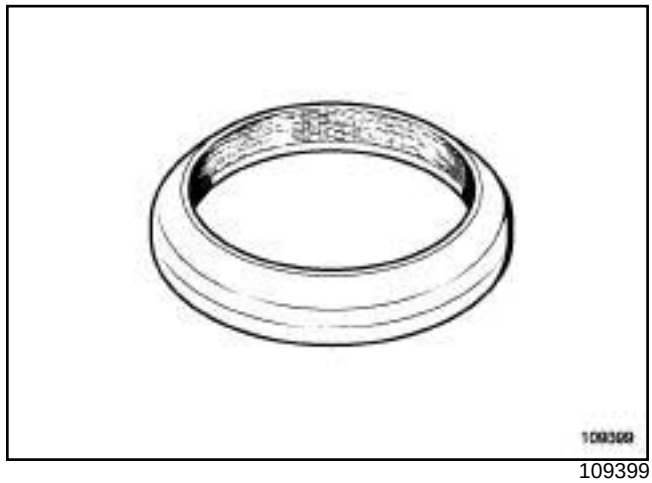

109399

❑ **parts always to be replaced: Exhaust manifold seal (10,07,02,07)**.

❑ **parts always to be replaced: ring between exhaust manifold and catalytic converter (10,08,02, 20)**.

❑ Use **SURFACE CLEANER** (see **Vehicle: Parts and ingredients for the repairwork**) (04B, Consumables - Products) to clean and degrease:

- the exhaust manifold joint face if it is to be re-used,
- the cylinder head joint face.

> Note:
>
> If a stud loosens during removal, coat it with **HIGH RESISTANCE THREADLOCK** (see **Vehicle: Parts and ingredients for the repairwork**) (04B, Consumables - Products).

❑ Tighten to torque the **exhaust manifold studs (8 N.m)**.

K4M

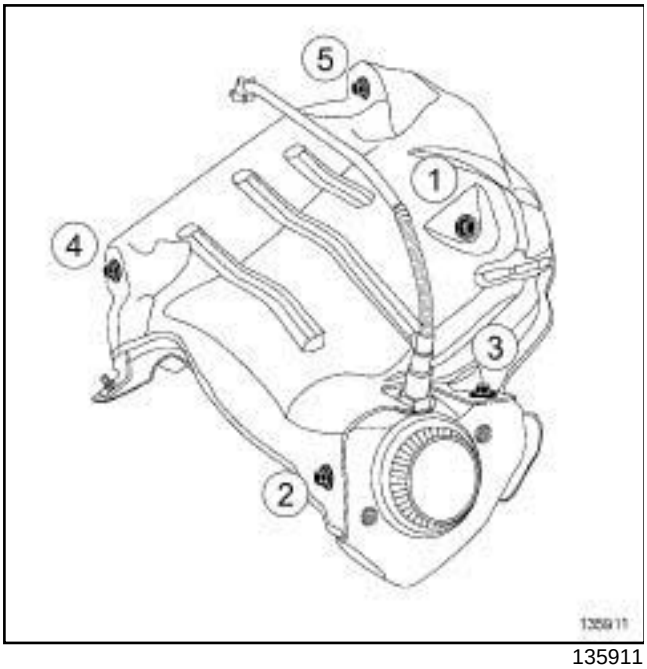

135911

- ❑ Refit the upstream oxygen sensor using the tool **(Mot. 1495-01)**.
- ❑ Refit the lower heat shield.
- ❑ Screw on the bolts (**4**) and (**5**) without tightening.
- ❑ Tighten in order and to torque the **bolts of the lower heat shield12 N (.m)**.

II - REFITTING OPERATION FOR PART CONCERNED

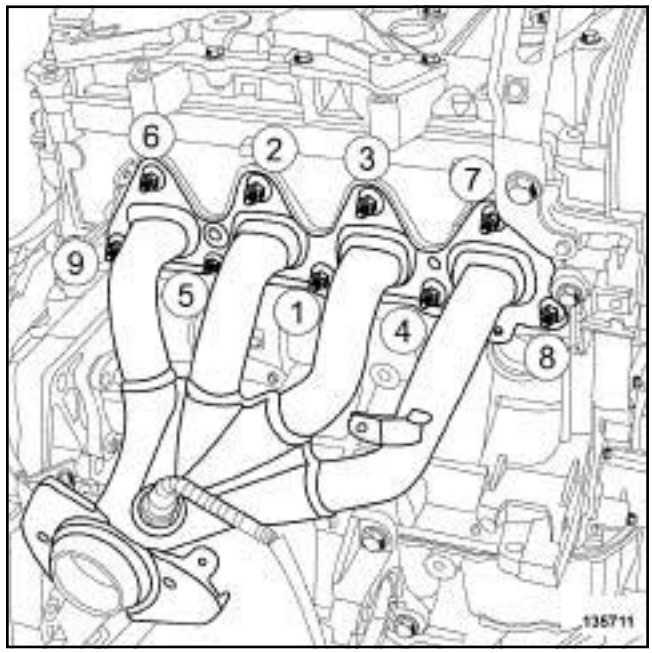

135711

- ❑ Refit:
  - a new exhaust manifold seal,
  - the exhaust manifold.
- ❑ Torque tighten in order the **exhaust manifold nuts (26 N.m)**.

III - FINAL OPERATION

- ❑ Refit the upper heat shield.

K4M

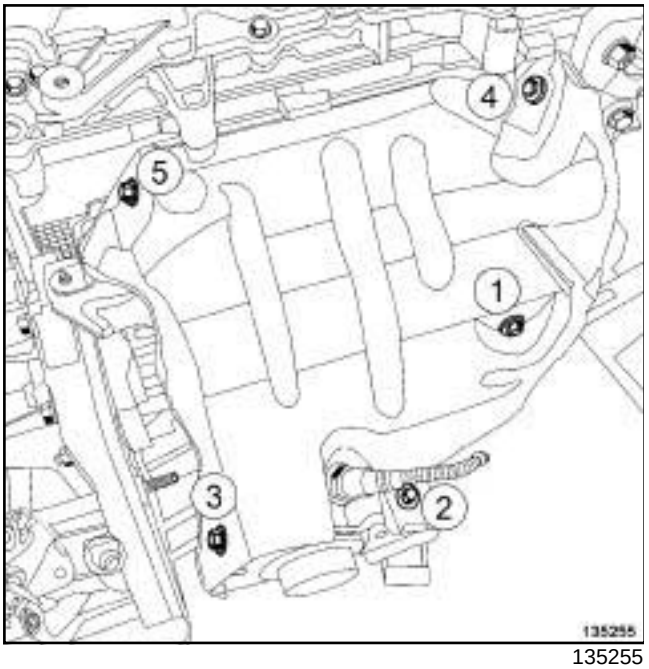

135255

- ❑ Screw on the bolts (**4**) and (**5**) without tightening.
- ❑ Tighten in order and to torque the **bolts of the upper heat shield12 N. (m)**.
- ❑ Refit the exhaust manifold stay.
- ❑ Tighten to torque:
  - the **exhaust manifold stay bolt (44 N.m)**,
  - the **exhaust manifold stay nut44 N (.m)**.
- ❑ Refit:
  - a new ring between the exhaust manifold and the catalytic converter,
  - the exhaust bracket bolts,
  - the heater matrix hose retaining bracket.
- ❑ Torque tighten the **retaining bracket bolt of the heater matrix hoses10 (N.m)**.
- ❑ Clip the hoses onto the retaining bracket of the heater matrix hoses.
- ❑ Connect the upstream oxygen sensor connector.
- ❑ Refit:
  - the engine undertray,
  - the intake distributor (see **12A**, **Fuel mixture**, **Inlet manifold: Removal - Refitting**, page **12A-23**) .

B95 or D95

- ❑ Refit the coils (see **17A**, **Ignition**, **Coils Removal - Refitting**, page **17A-1**) .
- ❑ Refit the throttle valve (see **12A**, **Fuel mixture**, **Throttle valve: Removal - Refitting**, page **12A-17**) .

B95 or D95

- ❑ Refit:
  - the scoop under the scuttle panel grille (see **Scoop under scuttle panel grille: Removal - Refitting**) (56A, Exterior equipment).
  - the scuttle panel grille (see **Scuttle panel grille: Removal - Refitting**) (56A, Exterior equipment),
  - the windscreen wiper arms (see **Windscreen wiper arm: Removal - Refitting**) (85A, Wiping - Washing).

J95

- ❑ Refit:
  - the centre section of the scoop under the scuttle panel grille (see **Scoop under scuttle panel grille: Removal - Refitting**) (56A, Exterior equipment),
  - the centre section of the scuttle panel grille (see **Scuttle panel grille: Removal - Refitting**) (56A, Exterior equipment).
- ❑ Refit the engine cover.
- ❑ Connect the battery (see **Battery: Removal - Refitting**) (80A, Battery).

K9K, and 830 or 832

Tightening torques ▽	
exhaust manifold nuts	**26 N.m**

IMPORTANT
Wear protective gloves during the operation.

REMOVAL

I - REMOVAL PREPARATION OPERATION

❑ Position the vehicle on a two-post lift (see **Vehicle: Towing and lifting**) (02A, Lifting equipment).

❑ Disconnect the battery (see **Battery: Removal - Refitting**) (80A, Battery).

J95

❑ Remove:

- the centre section of the scuttle panel grille (see **Scuttle panel grille: Removal - Refitting**) ,
- the centre section of the scoop under the scuttle panel grille (see **Scoop under scuttle panel grille: Removal - Refitting**) .

❑ Remove:

- the engine cover,
- the engine undertray bolts,
- the engine undertray,

K9K, and 830

❑ Remove the lower engine tie-bar (see **19D**, **Engine mounting**, **Lower engine tie-bar: Removal - Refitting**, page **19D-33**) .

❑ Remove:

- the catalytic converter (see **19B**, **Exhaust**, **Catalytic converter: Removal - Refitting**, page **19B-17**) ,
- the turbocharger air outlet pipe (see **12B**, **Turbocharging**, **Intercooler air inlet pipe: Removal - Refitting**, page **12B-41**) ,
- the turbocharger oil supply pipe (see **12B**, **Turbocharging**, **Turbocharger oil pipe: Removal - Refitting**, page **12B-22**) ,
- the turbocharger oil return pipe (see **12B**, **Turbocharging**, **Turbocharger oil pipe: Removal - Refitting**, page **12B-22**) ,
- the turbocharger (see **12B**, **Turbocharging**, **Turbocharger: Removal - Refitting**, page **12B-8**) .

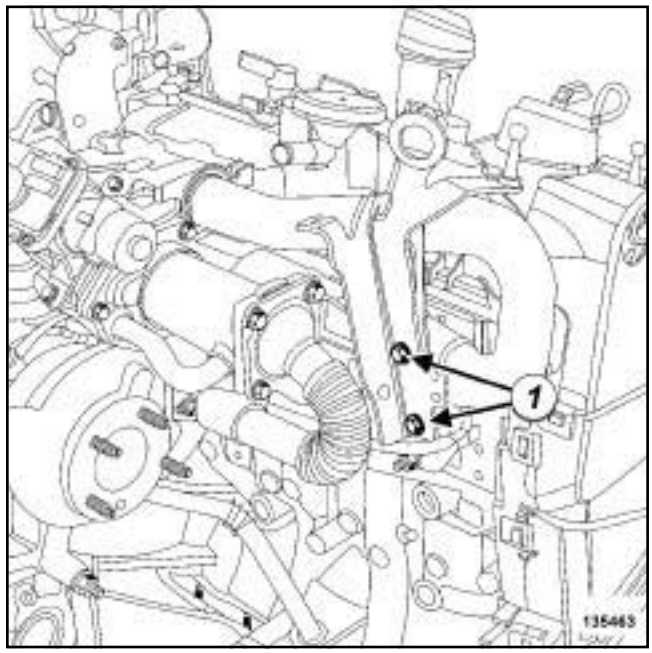

135463

❑ Remove:

- the bolts (**1**) from the lifting eye at the timing end,
- the lifting eye on the timing end,
- the rigid exhaust gas recirculation pipe (see **14A**, **Antipollution**, **Exhaust gas recirculation rigid pipe: Removal - Refitting**, page **14A-30**) .

K9K, and 830 or 832

II - OPERATION FOR REMOVAL OF PART CONCERNED

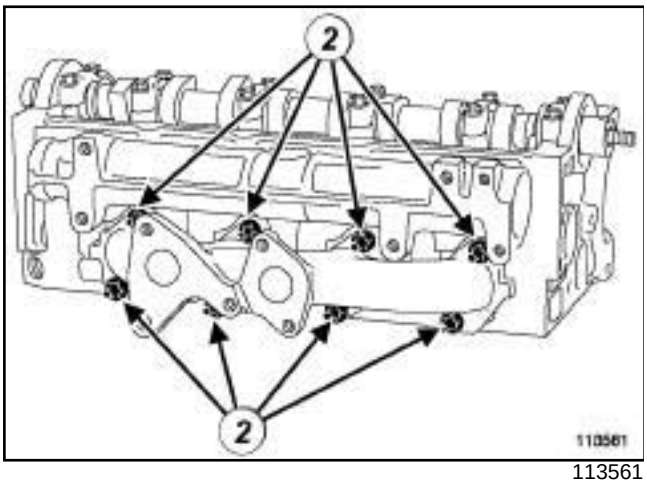

113561

❑ Remove:

- the nuts (**2**) from the exhaust manifold,
- the exhaust manifold.

❑ Mark the position of the exhaust manifold gasket.

❑ Remove the exhaust manifold gasket.

REFITTING

I - REFITTING PREPARATION OPERATION

❑ **parts always to be replaced: Exhaust manifold seal (10,07,02,07)**.

❑ Use **ABRASIVE PADS** to clean the joint face:

- the cylinder head,
- of the exhaust manifold, if it is to be reused.

❑ Use **SURFACE CLEANER** (see **Vehicle: Parts and ingredients for the repairwork**) (04B, Consumables - Products) and **CLEAN CLOTHS** to clean and degrease the joint faces:

- the cylinder head,
- of the exhaust manifold, if it is to be reused.

II - REFITTING OPERATION FOR PART CONCERNED

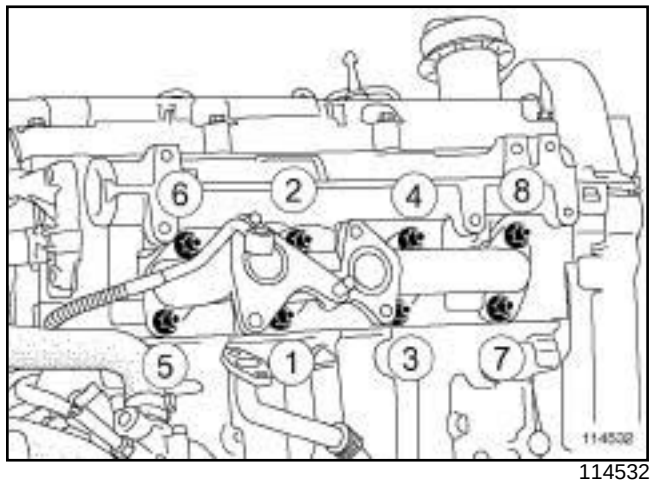

114532

❑ Refit:

- a new exhaust manifold gasket in the position marked during removal,
- the exhaust manifold.

❑ Torque tighten in order the **exhaust manifold nuts (26 N.m)**.

III - FINAL OPERATION

❑ Refit:

- the exhaust gas recirculation rigid pipe (see **14A**, **Antipollution**, **Exhaust gas recirculation rigid pipe: Removal - Refitting**, page **14A-30**) ,
- the lifting eye on the timing end,
- the turbocharger (see **12B**, **Turbocharging**, **Turbocharger: Removal - Refitting**, page **12B-8**) .
- the turbocharger oil return pipe (see **12B**, **Turbocharging**, **Turbocharger oil pipe: Removal - Refitting**, page **12B-22**) ,
- the turbocharger oil supply pipe (see **12B**, **Turbocharging**, **Turbocharger oil pipe: Removal - Refitting**, page **12B-22**) ,
- the turbocharger air outlet pipe (see **12B**, **Turbocharging**, **Intercooler air inlet pipe: Removal - Refitting**, page **12B-41**) ,
- the catalytic converter (see **19B**, **Exhaust**, **Catalytic converter: Removal - Refitting**, page **19B-17**) .

K9K, and 830 or 832

K9K, and 830

❑ Refit the lower engine tie-bar (see **19D**, **Engine mounting**, **Lower engine tie-bar: Removal - Refitting**, page **19D-33**) .

❑ Refit:

- the engine undertray,
- the engine cover.

J95

❑ Refit:

- the centre section of the scoop under the scuttle panel grille (see **Scoop under scuttle panel grille: Removal - Refitting**) ,
- the centre section of the scuttle panel grille (see **Scuttle panel grille: Removal - Refitting**) .

❑ Connect the battery (see **Battery : Removal - Refitting**) (80A, Battery).

Exhaust manifold: Removal - Refitting

F4R

Tightening torques ▽	
exhaust manifold nuts	**25 N.m**

IMPORTANT
Wear heat protective gloves during the operation.

REMOVAL

I - REMOVAL PREPARATION OPERATION

❑ Position the vehicle on a two-post lift (see **Vehicle: Towing and lifting**) (02A, Lifting equipment).

❑ Disconnect the battery (see **Battery: Removal - Refitting**) (80A, Battery).

❑ Remove:

- the engine cover,
- the engine undertray bolts,
- the engine undertray,
- the connecting hose (see **19B**, **Exhaust**, **Connecting hose: Removal - Refitting**, page **19B-60**) ,
- the windscreen wiper arms (see **Windscreen wiper arm: Removal - Refitting**) (85A, Wiping - Washing),
- the scuttle panel grille (see **Scuttle panel grille: Removal - Refitting**) (56A, Exterior equipment),
- the scoop under the scuttle panel grille (see **Scoop under scuttle panel grille: Removal - Refitting**) (56A, Exterior equipment),
- the front right-hand wheel (see **Wheel: Removal - Refitting**) (35A, Wheels and tyres),
- the front section of the front right-hand wheel arch liner (see **Front wheel arch liner: Removal - Refitting**) (55A, Exterior protection).

❑ Drain the manual gearbox (see **Manual gearbox oil: Draining - Refilling**) (21A, Manual gearbox).

❑ Remove:

- the front right-hand wheel driveshaft (see **Front right-hand wheel driveshaft: Removal - Refitting**) (29A, Driveshafts),
- the right-hand differential output seal (see **Differential output seal: Removal - Refitting**) (21A, Manual gearbox),
- the lower engine tie-bar (see **19D**, **Engine mounting**, **Lower engine tie-bar: Removal - Refitting**, page **19D-33**) ,
- the connecting hose (see **19B**, **Exhaust**, **Connecting hose: Removal - Refitting**, page **19B-60**) ,
- the catalytic converter (see **19B**, **Exhaust**, **Catalytic converter: Removal - Refitting**, page **19B-17**) .

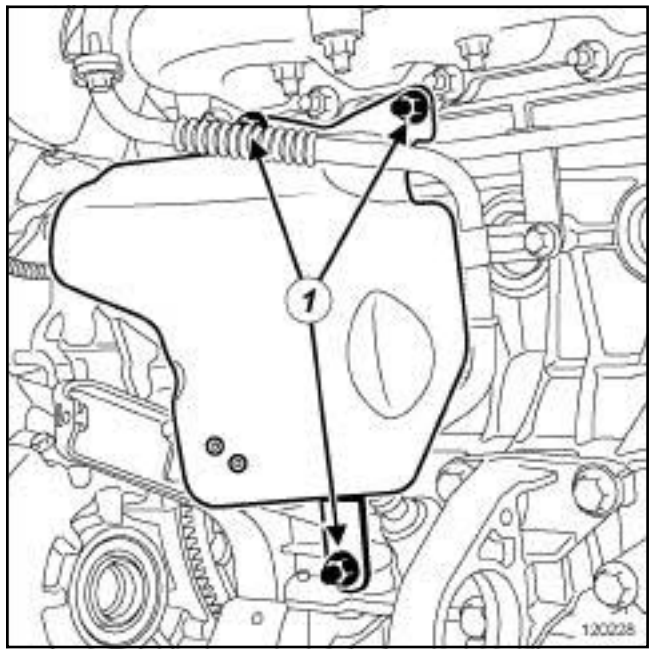

120228

❑ Remove:

- the heat shield bolts (**1**) from the starter,
- the heat shield from the starter,
- the turbocharger (see **12B**, **Turbocharging**, **Turbocharger: Removal - Refitting**, page **12B-8**) .

F4R

II - OPERATION FOR REMOVAL OF PART CONCERNED

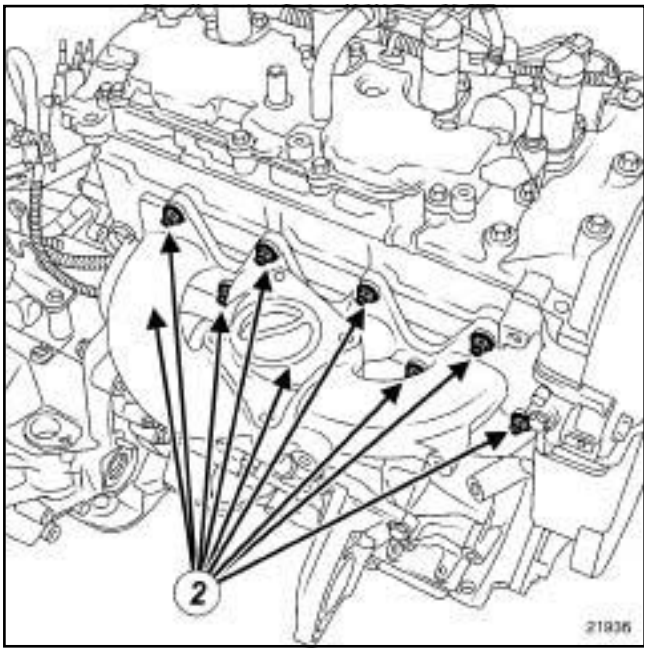

21936

❑ Remove:

- the nuts (**2**) from the exhaust manifold,
- the exhaust manifold,
- the exhaust manifold gasket.

REFITTING

I - REFITTING PREPARATION OPERATION

❑ **parts always to be replaced: Exhaust manifold seal (10,07,02,07)**.

❑ Use **SURFACE CLEANER** (see **Vehicle: Parts and ingredients for the repairwork**) (04B, Consumables - Products) to clean and degrease:

- the exhaust manifold joint face if it is to be re-used,
- the cylinder head joint face.

> Note:
>
> If a stud loosens during this operation, coat it with **HIGH STRENGTH THREAD LOCK** (see **Vehicle: Parts and ingredients for the repairwork**) (04B, Consumables - Products).

II - REFITTING OPERATION FOR PART CONCERNED

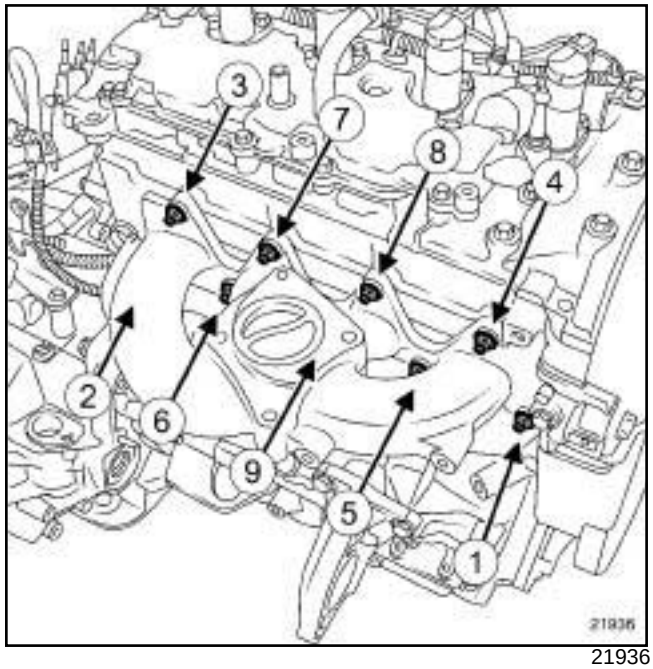

21936

❑ Refit:

- a new exhaust manifold gasket,
- the exhaust manifold.

❑ Screw on the exhaust manifold nuts without tightening them.

❑ Tighten to torque and in order the **exhaust manifold nuts (25 N.m)**.

III - FINAL OPERATION

❑ Refit:

- the heat shield to the starter,
- the catalytic converter (see **19B**, **Exhaust**, **Catalytic converter: Removal - Refitting**, page **19B-17**) ,
- the connecting hose (see **19B**, **Exhaust**, **Connecting hose: Removal - Refitting**, page **19B-60**) ,
- the lower engine tie-bar (see **19D**, **Engine mounting**, **Lower engine tie-bar: Removal - Refitting**, page **19D-33**) ,
- a new right-hand differential output seal (see **Differential output seal: Removal - Refitting**) (21A, Manual gearbox),
- the front right-hand wheel driveshaft (see **Front right-hand wheel driveshaft: Removal - Refitting**) (29A, Driveshafts).

❑ Fill the manual gearbox (see **Manual gearbox oil: Draining - Refilling**) (21A, Manual gearbox).

F4R

❑ Refit:

- the front section of the front right-hand wheel arch liner (see **Front wheel arch liner: Removal - Refitting**) (55A, Exterior protection),
- the front right-hand wheel (see **Wheel: Removal - Refitting**) (35A, Wheels and tyres),
- the scoop under the scuttle panel grille (see **Scoop under scuttle panel grille: Removal - Refitting**) (56A, Exterior equipment),
- the scuttle panel grille (see **Scuttle panel grille: Removal - Refitting**) (56A, Exterior equipment),
- the windscreen wiper arms (see **Windscreen wiper arm: Removal - Refitting**) (85A, Wiping - Washing),
- the connecting hose (see **19B**, **Exhaust**, **Connecting hose: Removal - Refitting**, page **19B-60**) ,
- the engine undertray,
- the engine cover.

❑ Connect the battery (see **Battery : Removal - Refitting**) (80A, Battery).

K9K, and 836

Tightening torques ▽	
exhaust manifold nuts	**26 N.m**

REMOVAL

I - REMOVAL PREPARATION OPERATION

❑ Position the vehicle on a two-post lift (see **Vehicle: Towing and lifting**) (02A, Lifting equipment).

❑ Remove:

- the engine cover,
- the engine undertray bolts,
- the engine undertray.

J95

❑ Remove:

- the scuttle panel grille centre section (see **Scuttle panel grille: Removal - Refitting**) ,
- the scoop under the centre section of the scuttle panel grille (see **Scoop under scuttle panel grille: Removal - Refitting**) .

❑ Remove:

- the exhaust gases duct at the turbocharger outlet (see **12B**, **Turbocharging**, **Turbocharger outlet exhaust gas duct: Removal - Refitting**, page **12B-49**) ,
- the turbocharger oil supply pipe (see **12B**, **Turbocharging**, **Turbocharger oil pipe: Removal - Refitting**, page **12B-22**) ,
- the turbocharger oil return pipe (see **12B**, **Turbocharging**, **Turbocharger oil pipe: Removal - Refitting**, page **12B-22**) ,
- the exhaust gas recirculation rigid pipe (see **14A**, **Antipollution**, **Exhaust gas recirculation rigid pipe: Removal - Refitting**, page **14A-30**) ,
- the exhaust gas recirculation assembly (see **14A**, **Antipollution**, **Exhaust gas recirculation assembly: Removal - Refitting**, page **14A-18**) ,
- the turbocharger (see **12B**, **Turbocharging**, **Turbocharger: Removal - Refitting**, page **12B-8**) ,
- the exhaust gas temperature sensor (see **19B**, **Exhaust**, **Exhaust gas temperature sensor: Removal - Refitting**, page **19B-50**) .

II - OPERATION FOR REMOVAL OF PART CONCERNED

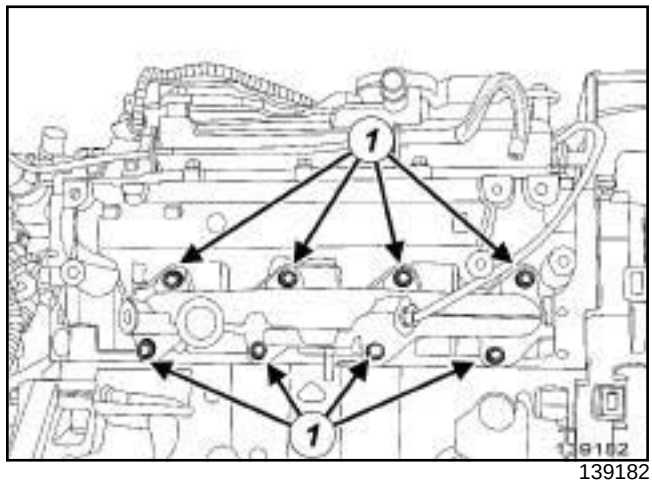

139182

❑ Remove:

- the exhaust manifold nuts,
- the exhaust manifold,
- the exhaust manifold gasket.

REFITTING

I - REFITTING PREPARATION OPERATION

❑ **parts always to be replaced: Exhaust manifold seal (10,07,02,07)**

❑ Use **ABRASIVE PADS** to clean the joint face:

- the cylinder head,
- of the exhaust manifold, if it is to be reused.

❑ Use **SURFACE CLEANER** (see **Vehicle: Parts and consumables for repair**) (04B, Consumables - Products) and **CLEAN CLOTHS** to clean and degrease the joint faces:

- the cylinder head,
- of the exhaust manifold, if it is to be reused.

K9K, and 836

II - REFITTING OPERATION FOR PART CONCERNED

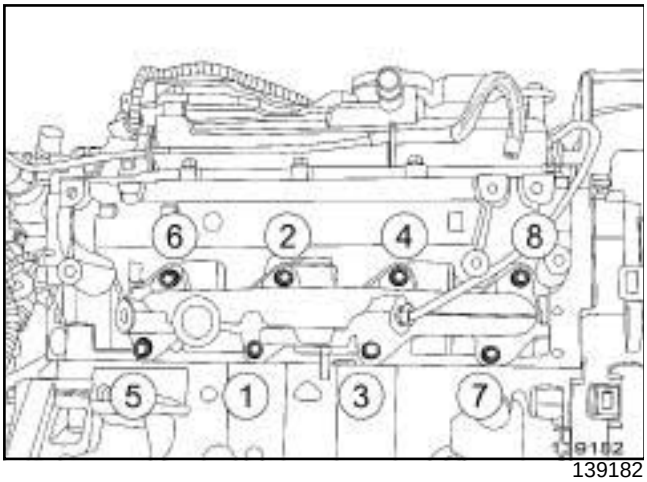

139182

❑ Refit:

- the exhaust manifold gasket,
- the exhaust manifold.

❑ Torque tighten in order the **exhaust manifold nuts (26 N.m)**.

III - FINAL OPERATION

❑ Refit:

- the exhaust gas temperature sensor (see **19B**, **Exhaust**, **Exhaust gas temperature sensor: Removal - Refitting**, page **19B-50**) ,
- the turbocharger (see **12B**, **Turbocharging**, **Turbocharger: Removal - Refitting**, page **12B-8**) ,
- the exhaust gas recirculation assembly (see **14A**, **Antipollution**, **Exhaust gas recirculation assembly: Removal - Refitting**, page **14A-18**) ,
- the exhaust gas recirculation rigid pipe (see **14A**, **Antipollution**, **Exhaust gas recirculation rigid pipe: Removal - Refitting**, page **14A-30**) ,
- the turbocharger oil return pipe (see **12B**, **Turbocharging**, **Turbocharger oil pipe: Removal - Refitting**, page **12B-22**) ,
- the turbocharger oil supply pipe (see **12B**, **Turbocharging**, **Turbocharger oil pipe: Removal - Refitting**, page **12B-22**) ,
- the exhaust gas duct at the turbocharger outlet (see **12B**, **Turbocharging**, **Turbocharger outlet exhaust gas duct: Removal - Refitting**, page **12B-49**) .

J95

❑ Refit:

- the scoop under the centre section of the scuttle panel grille (see **Scoop under scuttle panel grille: Removal - Refitting**) ,
- the scuttle panel grille centre section (see **Scuttle panel grille: Removal - Refitting**) .

❑ Refit:

- the engine undertray,
- the engine cover.

F4R or F9Q or K9K

I - TURBOCHARGER: GENERAL INSTRUCTIONS

To test the turbocharger pressure regulator **see Technical Note 3419A, Turbocharger fault finding, 12B, Turbocharger, Fault finding - tests**.

WARNING

The turbocharger pressure regulator rod must not be adjusted.

II - TURBOCHARGER CIRCUIT DIAGRAM

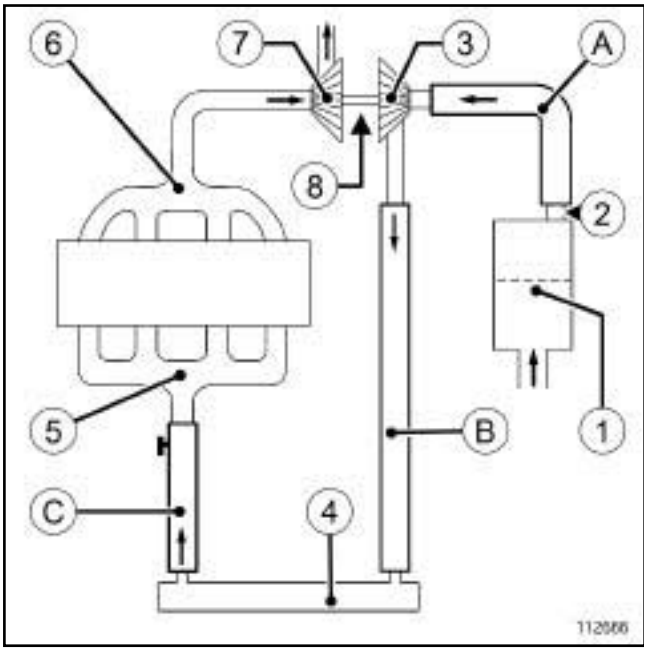

112666

(**1**)	Air filter unit
(**2**)	Air flowmeter
(**3**)	Compressor wheel
(**4**)	Intercooler
(**5**)	Inlet manifold
(**6**)	Exhaust manifold
(**7**)	Turbine wheel
(**8**)	Bearing system (bearing + wheel shaft)
(**A**)	Air filter unit air outlet pipe
(**B**)	Turbocharger air outlet pipe
(**C**)	Intercooler air outlet pipe

III - APPLICATION CONDITIONS OF INSTRUCTIONS

The instructions below must be followed when replacing a turbocharger due to mechanical damage:

- damage to the bearing system,
- broken shaft or turbine wheel,
- compressor wheel rubbing against the turbocharger casing,
- broken or damaged compressor wheel,
- extensive clogging of the turbine wheel casing (hard deposits).

FOR THE AIR CIRCUIT:

- Consequences:
  - swarf or metal objects in the turbocharger inlet and outlet pipes,
  - oil in the air circuit (collected in the intercooler).
- Risks (after replacing the turbocharger):
  - metal objects sucked in by the compressor wheel (destruction of the turbocharger).

FOR THE LUBRICATION CIRCUIT:

- Consequences:
  - swarf found in the engine oil circuit,
  - circulation of swarf within the circuit.
- Risks (after replacing the turbocharger):
  - premature wear on the bearing system (destruction of turbocharger).

WARNING

Metal objects may enter the oil and air circuits as a result of a broken turbocharger.

Failure to follow the INSTRUCTIONS listed will lead to the turbocharger breaking again.

INSTRUCTIONS:

- Drain the engine oil (see **10A**, **Engine and cylinder block assembly**, **Engine oil: Draining - Refilling**, page **10A-40**)
- Replace the oil filter (see **10A**, **Engine and cylinder block assembly**, **Oil filter: Removal - Refitting**, page **10A-48**) .
- Replace the seals and fittings,
- Carry out the following only if the compressor wheel is broken or rubbing against the turbocharger casing:
  - Drain the intercooler,

F4R or F9Q or K9K

• Clean the turbocharger air pipes.

Note:

When carrying out an operation on the air or lubrication circuit, it is necessary to plug the open holes to prevent any risk of foreign bodies entering the system.

IV - AIR CIRCUIT*: INSTRUCTIONS FOLLOWING MECHANICAL DAMAGE TO THE TURBOCHARGER

Note:

(*) These instructions for the air circuit are only to be followed in the case of:

- broken compressor wheel,
- compressor wheel rubbing against the turbocharger casing.

Remove the intercooler if fitted to the vehicle (see **12B**, **Turbocharging**, **Intercooler: Removal - Refitting**, page **12B-37**) .

Turn the intercooler over and allow the oil inside to drain out.

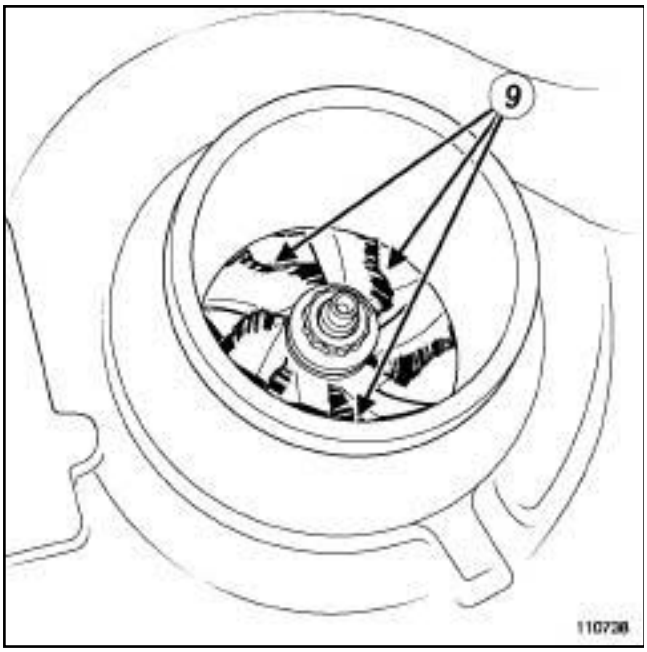

110738

Note:

If the compressor wheel (**9**) is damaged, metal objects are ejected inside the air pipes.

Check that there are no metal objects inside the flowmeter ***(2)*** .

Remove:

- the air pipe ***(A)*** (between the air filter box and the turbocharger),
- the air pipe ***(B)*** (between the turbocharger and the intercooler).

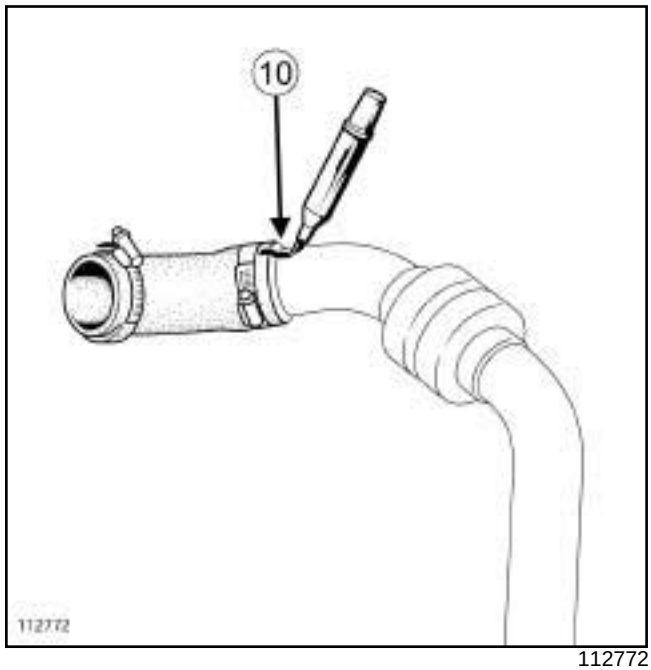

112772

For air pipes comprising several components:

- mark (**10**) the fitting position of each component,
- separate all the components.

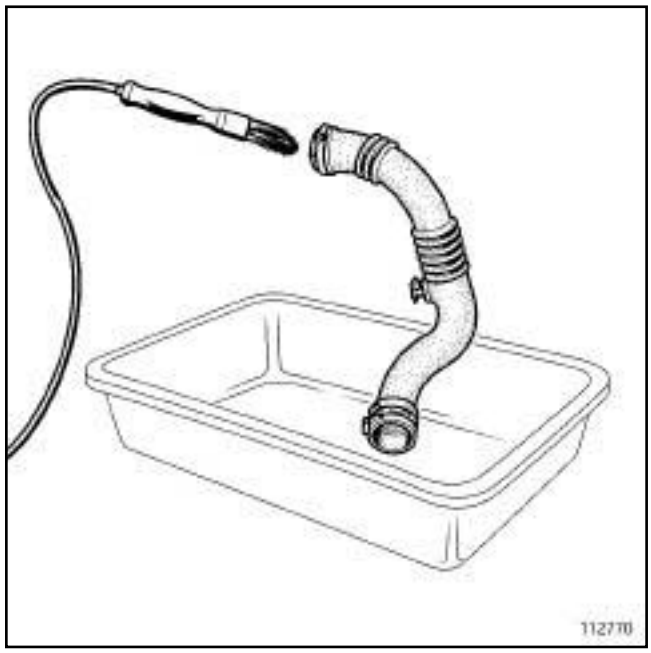

112770

F4R or F9Q or K9K

Clean the removed pipes one by one using the cleaning station:

- brush as much of the inside of the pipe as possible (only use brushes with plastic bristles),
- wash plenty of cleaning product from the cleaning station through the pipe,
- allow the cleaned pipe to drain by standing it upright,
- ensure the cleaning product has drained out completely (check areas where liquid may be retained, e.g. gaiters, resonators etc.).

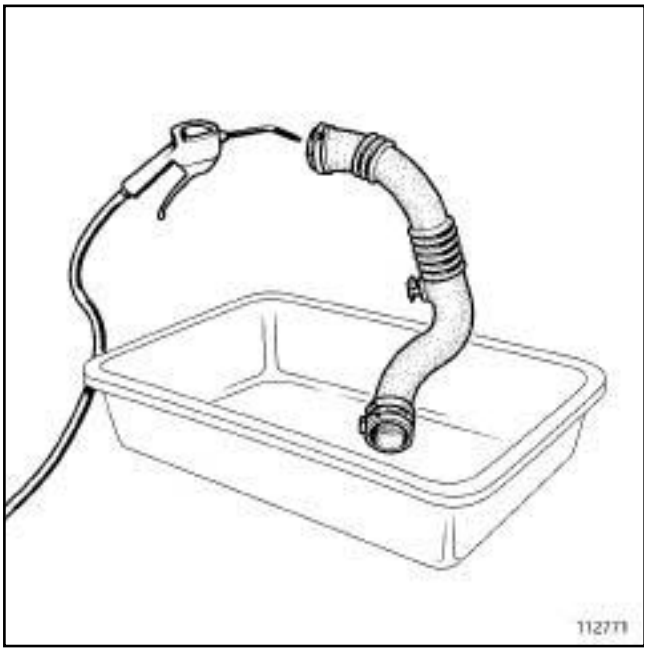

112771

Dry the pipes one by one using a compressed air spray gun.

For pipes comprising several components:

- assemble the components, taking note of their correct fitting position ***(10)*** .

Refit:

- the air pipe ***(A)*** (between the air filter box and the turbocharger),
- the air pipe ***(B)*** (between the turbocharger and the intercooler).

Refit the intercooler, if fitted to the vehicle (see **12B**, **Turbocharging**, **Intercooler: Removal - Refitting**, page **12B-37**) .

V - LUBRICATION CIRCUIT: INSTRUCTIONS FOLLOWING MECHANICAL DAMAGE TO THE TURBOCHARGER**

Note:

(**) These instructions relating to the lubrication circuit must always be followed in all cases of mechanical damage as listed above.

Drain the engine oil (see **10A**, **Engine and cylinder block assembly**, **Engine oil: Draining - Refilling**, page **10A-40**) .

Replace the oil filter (see **10A**, **Engine and cylinder block assembly**, **Oil filter: Removal - Refitting**, page **10A-48**) .

Fill the engine with a suitable oil type only (see **Engine oil: Specifications**) (Technical Note 6013A, 04A, Lubricants).

VI - GENERAL INSTRUCTIONS TO BE FOLLOWED WHEN REMOVING A TURBOCHARGER

Replace:

- the oil supply pipe:
  - if the pipe is blocked, even partially (due to scale, carbonised oil etc.),
  - if the pipe is fitted with self-retaining seals.
- the oil return pipe:
  - if the pipe is blocked, even partially (due to scale, carbonised oil etc.),
  - if the pipe is fitted with self-retaining seals.
- all seals that have been removed,
- all fittings that have been removed.

WARNING
Failure to observe the following procedure may lead to destruction of the turbocharger.

When starting the engine:

- do not accelerate,
- allow the engine to run for **1 minute**,the time taken for the oil circuit pressure to increase (until the oil pressure warning light on the instrument panel goes out),
- accelerate several times at no load,
- check the air circuit and the oil circuit for leaks.

Essential equipment
parts washer

I - TURBOCHARGER: GENERAL INSTRUCTIONS

For the turbocharging pressure regulator check (see **Fault Finding - Tests**) (Technical Note 3419A, 12B, Turbocharging).

WARNING
It is prohibited to adjust the turbocharger turbocharging pressure regulator rod.

WARNING
Ensure that no foreign bodies enter the turbine or compressor during the refitting operation.

Check that the turbocharger oil return pipe is not partially or completely blocked by scale. Check that there are no leaks. If there are, replace the part.

II - TURBOCHARGER CIRCUIT DIAGRAM

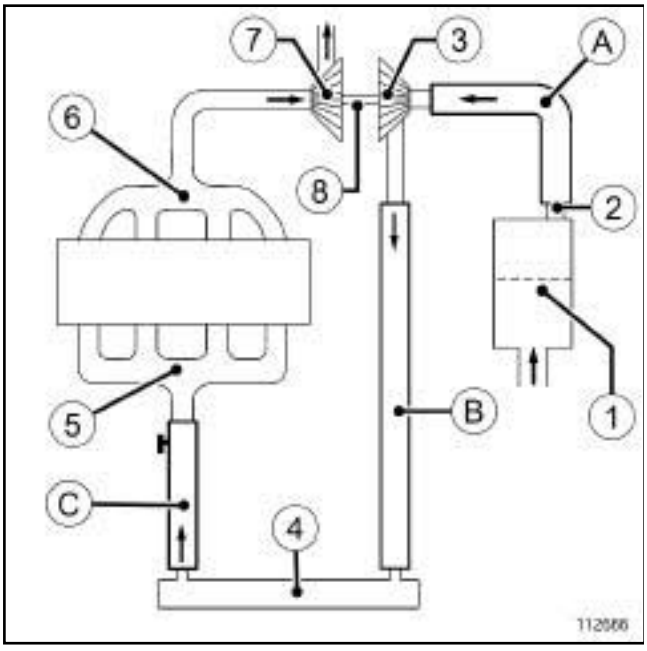

112666

(**1**)	Air filter unit
(**2**)	Airflow meter
(**3**)	Compressor wheel
(**4**)	Air-to-air intercooler
(**5**)	Inlet manifold
(**6**)	Exhaust manifold
(**7**)	Turbine wheel
(**8**)	Bearing system (bearing + wheel shaft)
(**A**)	Air filter unit air outlet pipe
(**B**)	Turbocharger air outlet pipe
(**C**)	Intercooler air outlet pipe

III - APPLICATION CONDITIONS FOR THE INSTRUCTIONS

The instructions below must be followed when replacing a turbocharger due to mechanical damage:

- damage to the bearing system,
- broken shaft or turbine wheel,
- compressor wheel rubbing against the turbocharger casing,
- broken or damaged compressor wheel,
- extensive clogging of the turbine wheel casing (hard deposits).

1 - For the air circuit:

- Consequences:
  - projections of swarf or metal objects in the inlet and outlet pipes of the turbocharger,
  - splashes of oil in the air circuit (collected in the air-air intercooler)
- Risks (after replacing the turbocharger):
  - metal objects sucked in by the compressor wheel (destruction of the turbocharger).

2 - For the lubrication circuit:

- Consequences:
  - projections of swarf in the engine oil circuit,
  - circulation of swarf within the circuit.
- Risks (after replacing the turbocharger):
  - premature wear on the bearing system (destruction of turbocharger).

WARNING
Metal objects may enter the oil and air circuits as a result of a broken turbocharger.

Failure to observe the following instructions will lead to the turbocharger breaking again.

3 - List of instructions

- Drain the engine oil (see **10A**, **Engine and cylinder block assembly**, **Engine oil: Draining - Refilling**, page **10A-40**) .
- Replace the oil filter (see **10A**, **Engine and cylinder block assembly**, **Oil filter: Removal - Refitting**, page **10A-48**) .
- Replace the seals and fittings,
- Carry out the following only if the compressor wheel is broken or rubbing against the turbocharger casing:
  - Drain the intercooler,
  - Clean the turbocharger air pipes.

Note:

When carrying out an operation on the air or lubrication circuit, it is necessary to plug the open holes to prevent any risk of foreign bodies entering the system.

IV - AIR CIRCUIT*: INSTRUCTIONS FOLLOWING MECHANICAL DAMAGE TO THE TURBOCHARGER

Note:

(*) These instructions for the air circuit are only to be followed in the case of:

- broken compressor wheel,
- or compressor wheel rubbing against the turbocharger casing.

Remove the intercooler if fitted to the vehicle (see **12B**, **Turbocharging**, **Intercooler: Removal - Refitting**, page **12B-37**) .

Turn the intercooler over and allow the oil inside to drain out.

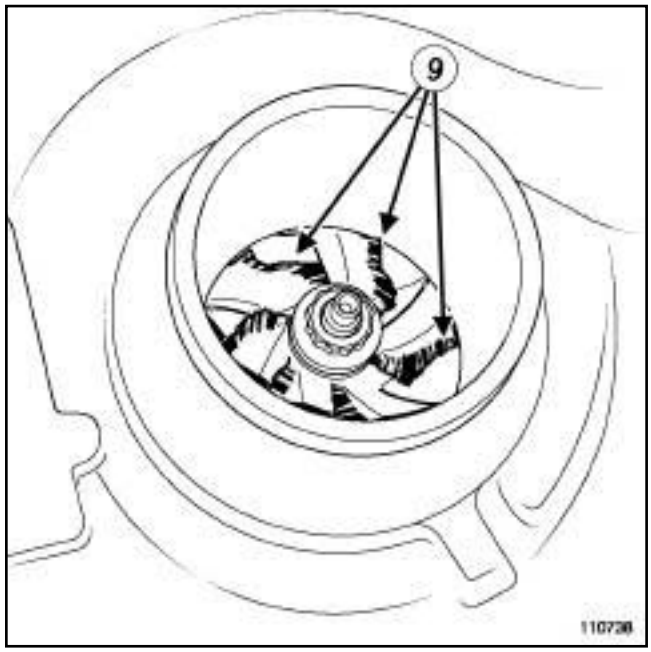

110738

Note:

If the compressor wheel (**9**) is damaged, metal objects have been projected inside the air pipes.

Check that there are no metal objects inside the flowmeter ***(2)*** .

Remove:

- the air pipe ***(A)*** (between the air filter unit and the turbocharger),
- the air pipe ***(B)*** (between the turbocharger and the intercooler).

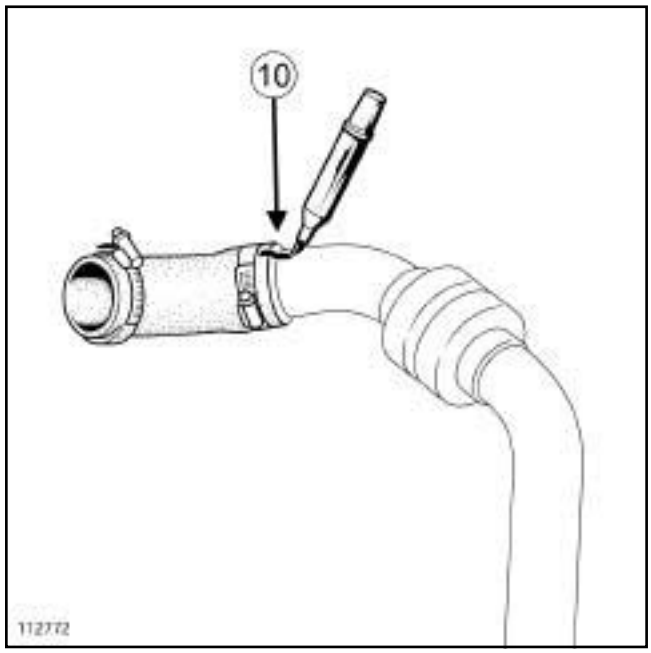

112772

For air pipes made up of several components:

- mark (**10**) the fitting position of each component,
- separate all the components.

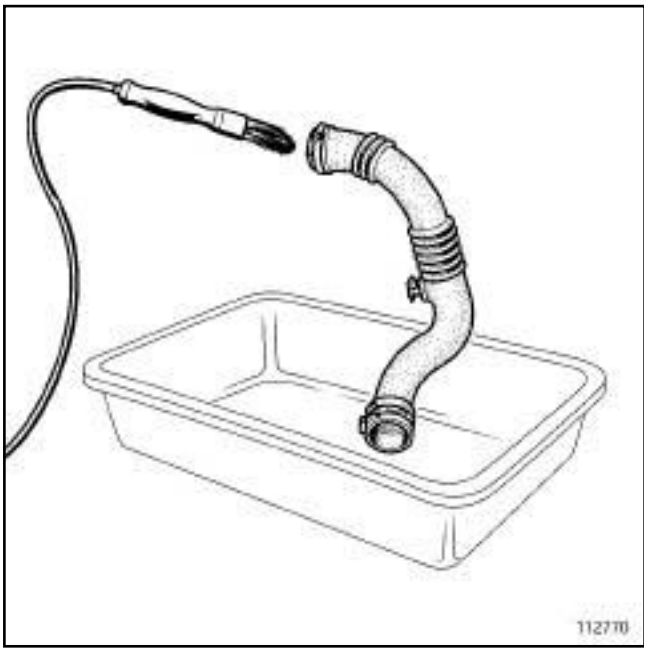

112770

One by one, clean the pipes removed with the **parts washer** :

- brush as much of the inside of the pipe as possible (only use brushes with plastic bristles),
- wash plenty of cleaning product from the cleaning station through the pipe,
- allow the cleaned pipe to drain by standing it upright,
- ensure that the cleaning product has drained out completely (check areas where liquid may be retained: gaiters, resonator, etc.).

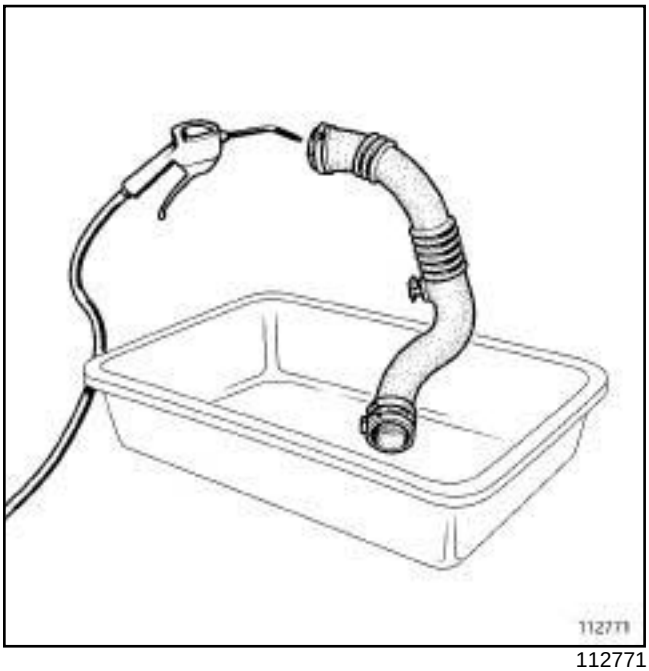

112771

Dry the pipes one by one using a compressed air gun.

For pipes comprising several components:

- assemble the components, taking note of their correct fitting position ***(10)*** .

Refit:

- the air pipe(between the air filter unit and the turbocharger) ***(A)*** ,
- the air pipe ***(B)*** (between the turbocharger and the intercooler).

Refit the intercooler, if fitted to the vehicle (see **12B**, **Turbocharging**, **Intercooler: Removal - Refitting**, page **12B-37**) .

V - LUBRICATION CIRCUIT: INSTRUCTIONS FOLLOWING MECHANICAL DAMAGE TO THE TURBOCHARGER**

Note:

(**) These instructions relating to the lubrication circuit must always be followed in all cases of mechanical damage as listed above.

Drain the engine oil (see **10A**, **Engine and cylinder block assembly**, **Engine oil: Draining - Refilling**, page **10A-40**) .

Replace the oil filter (see **10A**, **Engine and cylinder block assembly**, **Oil filter: Removal - Refitting**, page **10A-48**) .

Fill the engine with the correct type of oil only (see **Engine oil: Specifications**) .

VI - GENERAL INSTRUCTIONS TO BE FOLLOWED WHEN REMOVING A TURBOCHARGER

Always replace:

- the oil supply pipe:
  - if the pipe is blocked, even partially (due to scale, carbonised oil etc.),
  - if the pipe is fitted with self-retaining seals.
- the oil return pipe:
  - if the pipe is blocked, even partially (due to scale, carbonised oil etc.),
  - if the pipe is fitted with self-retaining seals.
- all seals that have been removed,
- all fittings that have been removed.

WARNING
Failure to observe the following procedure may lead to destruction of the turbocharger.

When starting the engine:

- do not accelerate,
- allow the engine to run for **1 minute**,the time taken for the oil circuit pressure to increase (until the oil pressure warning light on the instrument panel goes out),
- accelerate several times at no load,
- check the air circuit and the oil circuit for leaks.

F9Q

Tightening torques ▽	
turbocharger nuts	**25 Nm**
turbocharger bracket bolts	**25 N.m**

REMOVAL

I - REMOVAL PREPARATION OPERATION

❑ Position the vehicle on a two-post lift (see **Vehicle: Towing and lifting**) (02A, Lifting equipment).

❑ Remove:

- the engine cover,
- the engine undertray bolts,
- the engine undertray,
- the windscreen wiper arms (see **Windscreen wiper arm: Removal - Refitting**) (85A, Wiping - Washing),
- the scuttle panel grille (see **Scuttle panel grille: Removal - Refitting**) (56A, Exterior equipment),
- the scoop under the scuttle panel grille (see **Scoop under scuttle panel grille: Removal - Refitting**) (56A, Exterior equipment),
- the battery (see **Battery: Removal - Refitting**) (80A, Battery),
- the battery tray (see **Battery tray: Removal - Refitting**) (80A, Battery),
- the intercooler air inlet pipe (see **12B**, **Turbocharging**, **Intercooler air inlet pipe: Removal - Refitting**, page **12B-41**) ,
- the exhaust gas recirculation rigid pipes (see **14A**, **Antipollution**, **Exhaust gas recirculation rigid pipe: Removal - Refitting**, page **14A-30**) ,
- the exhaust gas recirculation assembly (see **14A**, **Antipollution**, **Exhaust gas recirculation assembly: Removal - Refitting**, page **14A-18**) ,
- the exhaust gases duct at the turbocharger outlet (see **12B**, **Turbocharging**, **Turbocharger outlet exhaust gas duct: Removal - Refitting**, page **12B-49**) ,
- the turbocharger oil pipe (see **12B**, **Turbocharging**, **Turbocharger oil pipe: Removal - Refitting**, page **12B-22**) ,
- the lower engine tie-bar (see **19D**, **Engine mounting**, **Lower engine tie-bar: Removal - Refitting**, page **19D-33**) .

II - OPERATION FOR REMOVAL OF PART CONCERNED

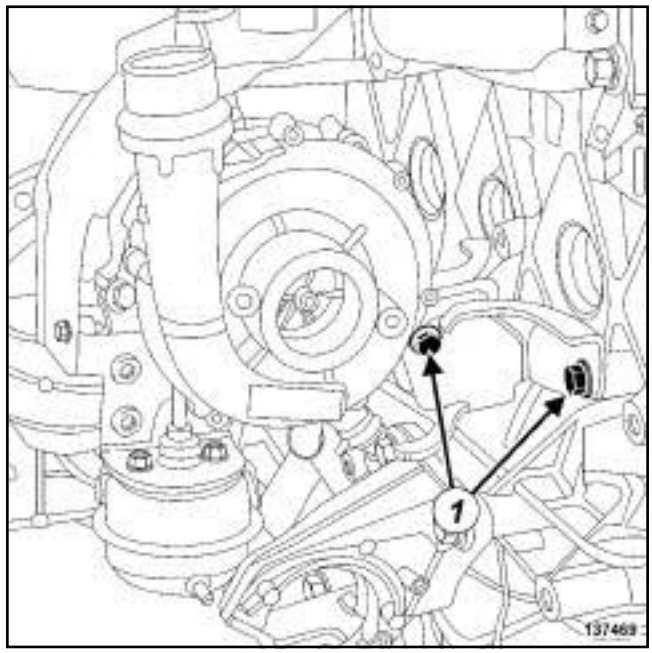

137469

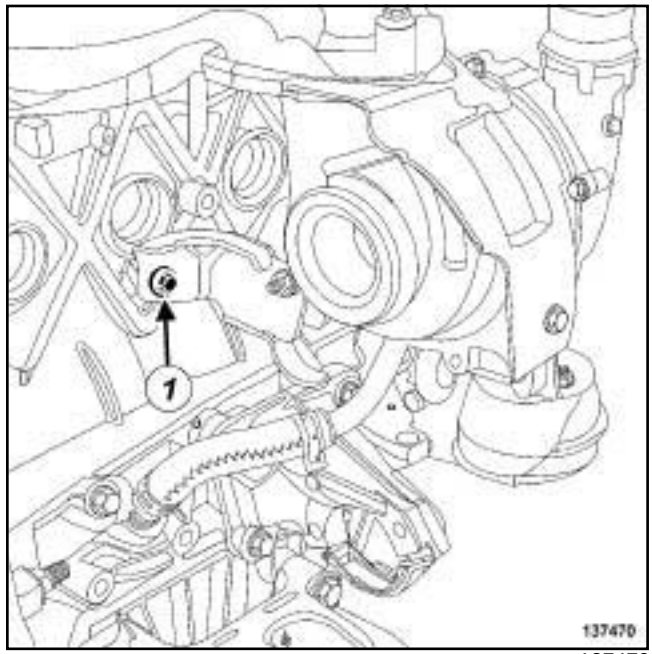

137470

❑ Remove:

- the bolts (**1**) from the turbocharger strut,
- the turbocharger strut.

F9Q

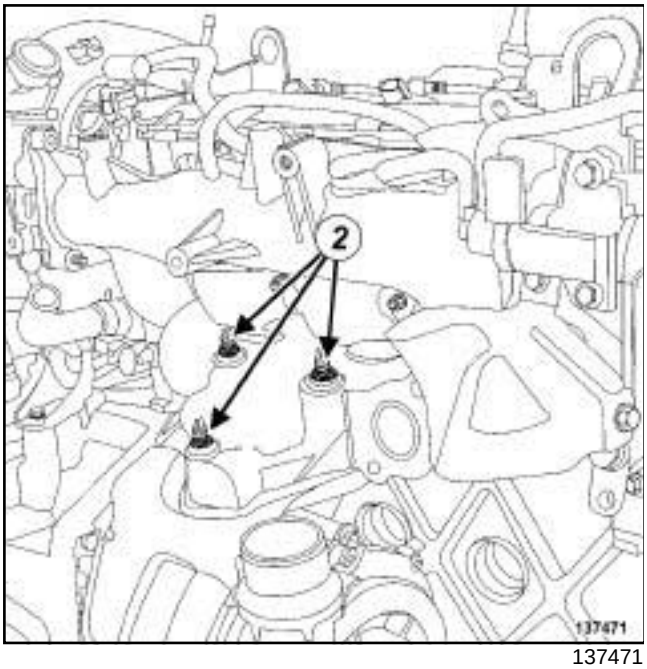

137471

❑ Remove:

- the turbocharger nuts (**2**) ,
- the turbocharger,
- the turbocharger heat shield.

REFITTING

I - REFITTING PREPARATION OPERATION

❑ Always replace the turbocharger heat shield.

❑ Use **SURFACE CLEANER** (see **Vehicle: Parts and ingredients for the repairwork**) (04B, Consumables - Products) to clean and degrease the joint faces:

- on the turbocharger,
- of the exhaust manifold.

II - REFITTING OPERATION FOR PART CONCERNED

❑ Refit:

- a new turbocharger heat shield,
- the turbocharger,
- the turbocharger strut.

❑ Torque tighten the **turbocharger nuts (25 Nm)**.

❑ Torque tighten the **turbocharger bracket bolts (25 N.m)**.

III - FINAL OPERATION

❑ Refit:

- the lower engine tie-bar (see **19D**, **Engine mounting**, **Lower engine tie-bar: Removal - Refitting**, page **19D-33**) ,
- the turbocharger oil pipe (see **12B**, **Turbocharging**, **Turbocharger oil pipe: Removal - Refitting**, page **12B-22**) ,
- the exhaust gases duct at the turbocharger outlet (see **12B**, **Turbocharging**, **Turbocharger outlet exhaust gas duct: Removal - Refitting**, page **12B-49**) ,
- the exhaust gas recirculation assembly (see **14A**, **Antipollution**, **Exhaust gas recirculation assembly: Removal - Refitting**, page **14A-18**) ,
- the exhaust gas recirculation rigid pipes (see **14A**, **Antipollution**, **Exhaust gas recirculation rigid pipe: Removal - Refitting**, page **14A-30**) ,
- the intercooler air inlet pipe (see **12B**, **Turbocharging**, **Intercooler air inlet pipe: Removal - Refitting**, page **12B-41**) ,
- the battery tray (see **Battery tray: Removal - Refitting**) (80A, Battery),
- the battery (see **Battery : Removal - Refitting**) (80A, Battery),
- the scoop under the scuttle panel grille (see **Scoop under scuttle panel grille: Removal - Refitting**) (56A, Exterior equipment),
- the scuttle panel grille (see **Scuttle panel grille: Removal - Refitting**) (56A, Exterior equipment),
- the windscreen wiper arms (see **Windscreen wiper arm: Removal - Refitting**) (85A, Wiping - Washing),
- the engine undertray,
- the engine cover.

K9K, and 830 or 832

Tightening torques ▽	
turbocharger studs on the exhaust manifold	**9 Nm**
turbocharger stud on the turbocharger	**9 Nm**
turbocharger nuts	**28 Nm**

IMPORTANT
Wear protective gloves during the operation.

REMOVAL

I - REMOVAL PREPARATION OPERATION

❑ Position the vehicle on a two-post lift (see **Vehicle: Towing and lifting**) (02A, Lifting equipment).

❑ Disconnect the battery (see **Battery: Removal - Refitting**) (80A, Battery).

❑ Remove:

- the engine cover,
- the engine undertray bolts,
- the engine undertray.

K9K, and 830

❑ Remove the lower engine tie-bar (see **19D**, **Engine mounting**, **Lower engine tie-bar: Removal - Refitting**, page **19D-33**) .

❑ Remove:

- the catalytic converter (see **19B**, **Exhaust**, **Catalytic converter: Removal - Refitting**, page **19B-17**) ,
- the turbocharger oil return pipe (see **12B**, **Turbocharging**, **Turbocharger oil pipe: Removal - Refitting**, page **12B-22**) ,
- the turbocharger air outlet pipe (see **12B**, **Turbocharging**, **Intercooler air inlet pipe: Removal - Refitting**, page **12B-41**) ,
- the turbocharger oil supply pipe (see **12B**, **Turbocharging**, **Turbocharger oil pipe: Removal - Refitting**, page **12B-22**) .

II - OPERATION FOR REMOVAL OF PART CONCERNED

❑ Disconnect the turbocharging pressure regulation valve control hose from the turbocharger.

K9K, and 832

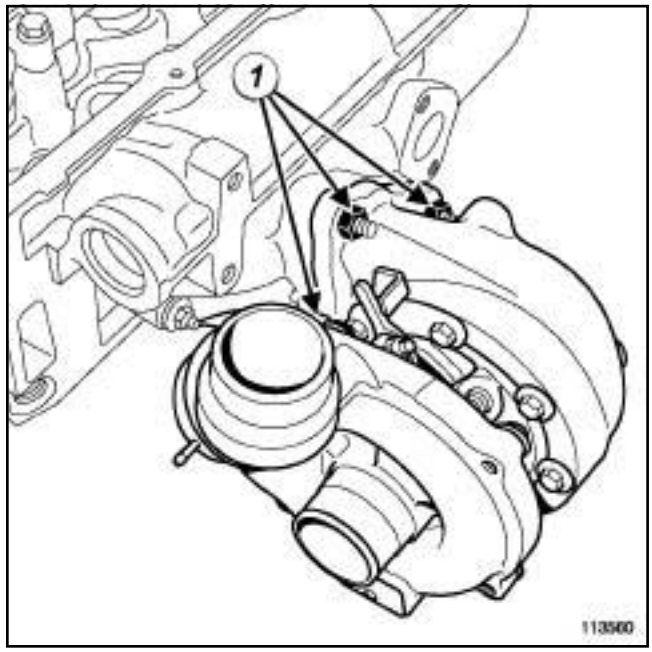

113560

❑ Remove:

- the turbocharger nuts (**1**) ,
- the turbocharger,
- the turbocharger seal.

K9K, and 830 or 832

K9K, and 830

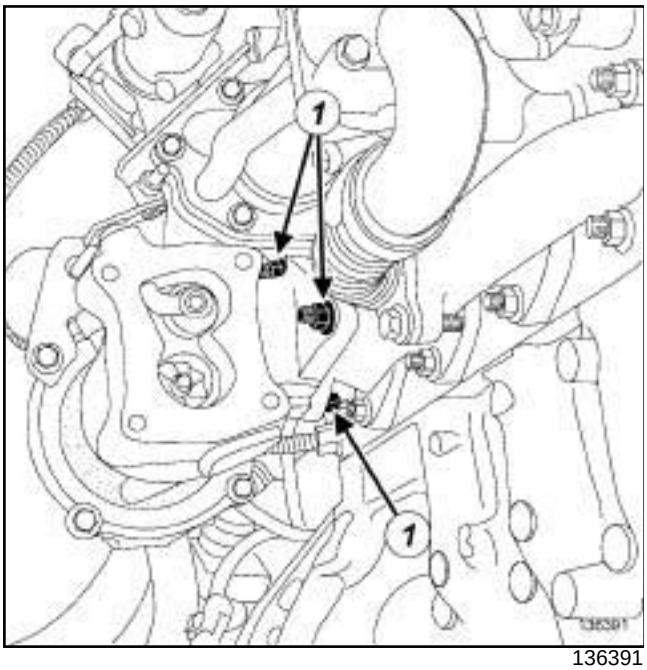

136391

❑ Remove:

- the turbocharger nuts (**1**) ,
- the turbocharger,
- the turbocharger seal.

REFITTING

I - REFITTING PREPARATION OPERATION

❑

WARNING
Ensure that no foreign bodies enter the turbine or compressor during the refitting operation.

Check that the turbocharger oil return pipe is not partially or completely blocked by scale. Check that there are no leaks. If there are, replace the part.

WARNING
Following a turbocharger fault, check that the intercooler and air circuit assembly are not full of oil. If they are, remove them and clean them with a cleaning tray or station and dry them with a compressed air gun.

❑ **parts always to be replaced: seal between exhaust manifold and turbocharger (10,09,01,07)**.

❑ Use **ABRASIVE PADS** to clean the joint faces:

- the exhaust manifold,
- of the turbocharger if reused.

❑ Use **SURFACE CLEANER** (see **Vehicle: Parts and ingredients for the repairwork**) (04B, Consumables - Products) and **CLEAN CLOTHS** to clean and degrease the joint faces:

- the exhaust manifold,
- of the turbocharger if reused.

❑ When replacing the turbocharger studs, torque tighten:

- the **turbocharger studs on the exhaust manifold (9 Nm)**,
- the **turbocharger stud on the turbocharger (9 Nm)**.

II - REFITTING OPERATION FOR PART CONCERNED

❑ Refit:

- a new seal between the exhaust manifold and the turbocharger on the exhaust manifold,
- the turbocharger.

❑ Torque tighten the **turbocharger nuts (28 Nm)**.

❑ Connect the turbocharger pressure regulating valve control hose.

III - FINAL OPERATION

❑ Refit:

- the turbocharger oil supply pipe (see **12B**, **Turbocharging**, **Turbocharger oil pipe: Removal - Refitting**, page **12B-22**) ,
- the turbocharger air outlet pipe (see **12B**, **Turbocharging**, **Intercooler air inlet pipe: Removal - Refitting**, page **12B-41**) ,
- the turbocharger oil return pipe (see **12B**, **Turbocharging**, **Turbocharger oil pipe: Removal - Refitting**, page **12B-22**) ,
- the catalytic converter (see **19B**, **Exhaust**, **Catalytic converter: Removal - Refitting**, page **19B-17**) .

K9K, and 830 or 832

K9K, and 830

- ❑ Refit the lower engine tie-bar (see **19D**, **Engine mounting**, **Lower engine tie-bar: Removal - Refitting**, page **19D-33**) .

- ❑ Refit:
  - the engine undertray,
  - the engine cover.
- ❑ Connect the battery (see **Battery : Removal - Refitting**) (80A, Battery).

F4R

Essential special tooling	
Ms. 583	Hose clamp pliers.

Tightening torques ▽	
turbocharger studs	**8.5 N.m**
turbocharger oil return pipe bolts	**12 Nm**
turbocharger cooling duct bolts	**12 N.m**
turbocharger upper nut	**15 N.m + 75° ± 6**
turbocharger lower nuts	**15 N.m + 75° ± 6**
clip for the air filter unit air outlet pipe at the air filter unit end	**6 N.m**
clip for the air filter unit air outlet pipe at the throttle unit end	**6 N.m**
clip for the intercooler air inlet pipe	**6 N.m**
catalytic converter strut bolt	**8 N.m**
catalytic converter strut nut	**44 N.m**
relay bearing bolts	**44 N.m**
lower engine tie-bar support bolts	**62 N.m**

IMPORTANT

Wear heat protective gloves during the operation.

WARNING

The turbocharger pressure regulator rod must not be adjusted.

WARNING

Metal objects may enter the oil and air circuits as a result of a broken turbocharger.

Failure to observe the following instructions will lead to the turbocharger breaking again.

WARNING

Following a turbocharger fault, check that the intercooler and air circuit assembly are not full of oil. If they are, remove them and clean them with a cleaning tray or station and dry them with a compressed air gun.

REMOVAL

I - REMOVAL PREPARATION OPERATION

❑ Position the vehicle on a two-post lift (see **Vehicle: Towing and lifting**) (02A, Lifting equipment).

❑ Remove:

- the engine undertray bolts,
- the engine undertray,
- the engine cover.

❑ Disconnect the battery (see **Battery: Removal - Refitting**) (80A, Battery).

❑ Remove:

- the windscreen wiper arms (see **Windscreen wiper arm: Removal - Refitting**) (85A, Wiping - Washing),
- the scuttle panel grille (see **Scuttle panel grille: Removal - Refitting**) (56A, Exterior equipment),
- the scoop under the scuttle panel grille (see **Scoop under scuttle panel grille: Removal - Refitting**) (56A, Exterior equipment),

F4R

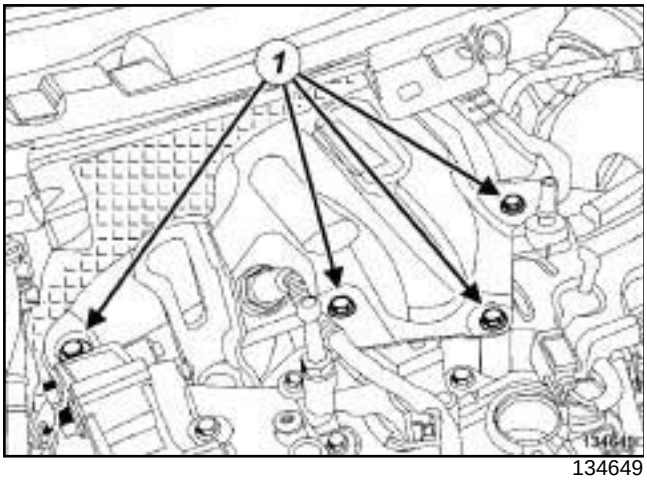

134649

❑

WARNING

To prevent the surrounding components from overheating, do not damage (tear, pierce, bend, etc.) a heat shield.

Any damaged heat shields must be replaced.

Remove:

- the bolts (**1**) from the turbocharger heat shield,
- the turbocharger heat shield.

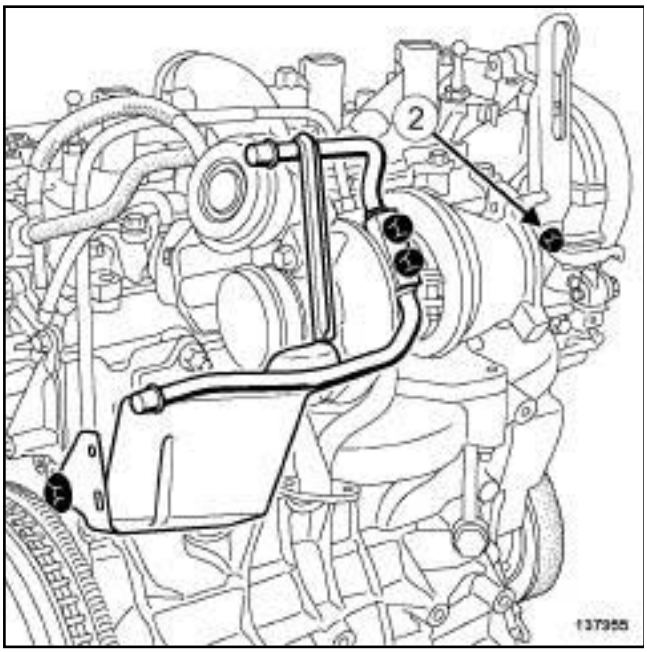

137955

❑ Remove:

- the bolt (**2**) from the lifting eye,
- the lifting eye,
- the front right-hand wheel (see **Wheel: Removal - Refitting**) (35A, Wheels and tyres),
- the front section of the front right-hand wheel arch liner (see **Front wheel arch liner: Removal - Refitting**) (55A, Exterior protection).

❑ Drain the manual gearbox (see **Manual gearbox oil: Draining - Refilling**) (21A, Manual gearbox).

❑ Remove:

- the front right-hand wheel driveshaft (see **Front right-hand wheel driveshaft: Removal - Refitting**) (29A, Driveshafts),
- the right-hand differential output seal (see **Differential output seal: Removal - Refitting**) (21A, Manual gearbox),
- the lower engine tie-bar (see **19D**, **Engine mounting**, **Lower engine tie-bar: Removal - Refitting**, page **19D-33**) .

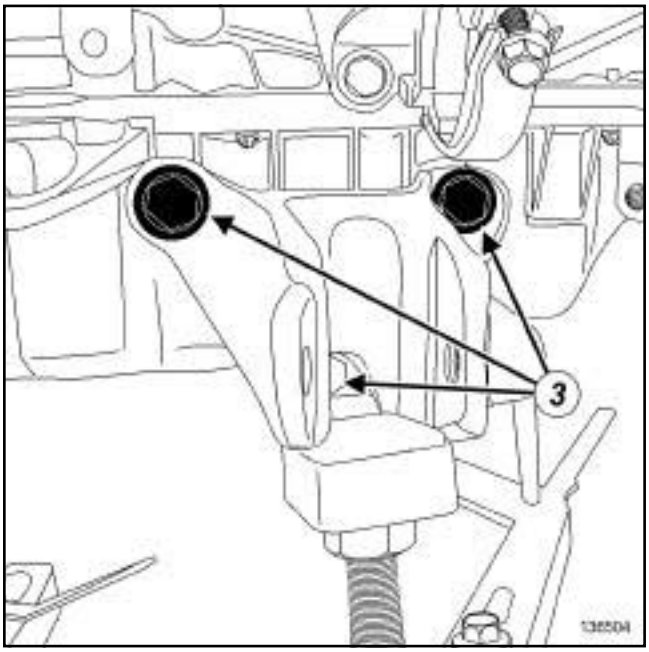

136504

❑ Remove:

- the lower engine tie-bar mounting bolts (**3**) ,
- the lower engine tie-bar support.

F4R

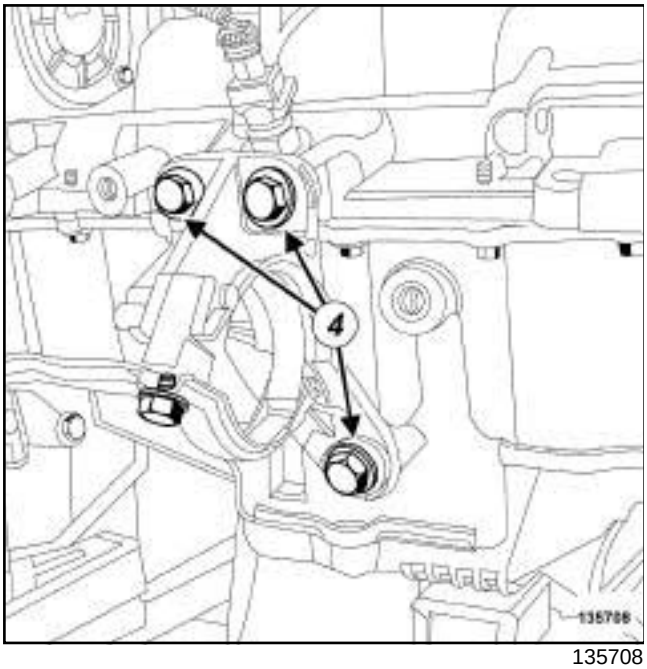

135708

❑ Remove:

- the bolts (**4**) from the relay bearing support,
- the relay bearing support.

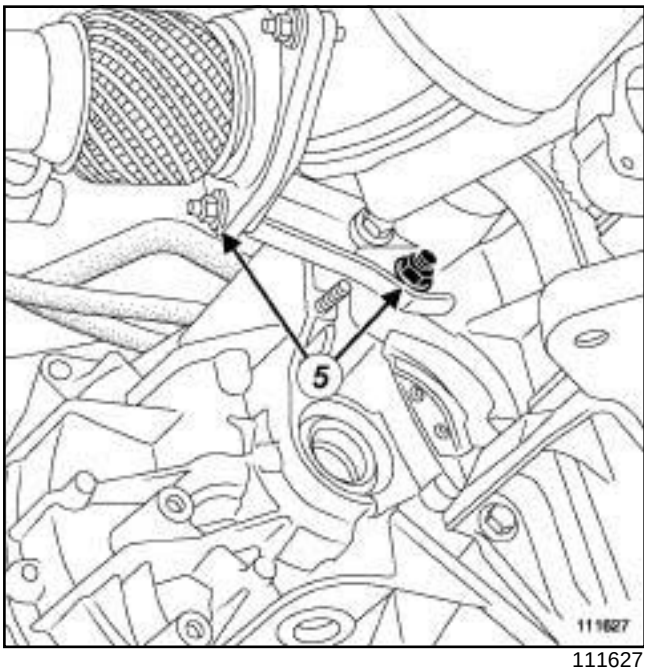

111627

❑ Remove:

- the catalytic converter side stay nuts (**5**) ,
- the catalytic converter strut.

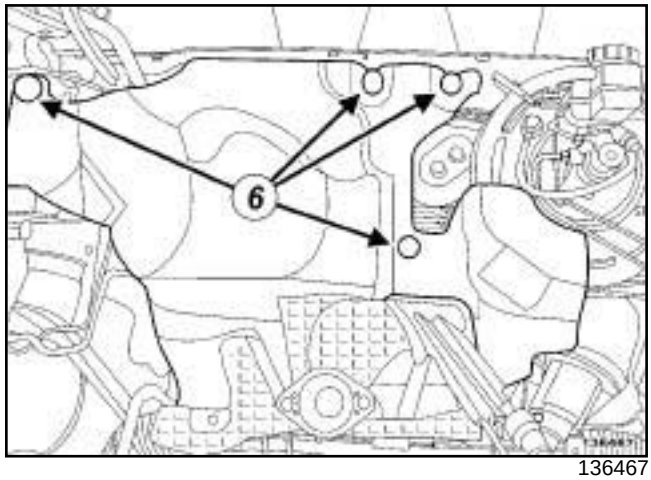

136467

❑ Remove:

- the bolts (**6**) from the bulkhead upper heat shield,
- the bulkhead upper heat shield,
- the connecting hose (see **19B**, **Exhaust**, **Connecting hose: Removal - Refitting**, page **19B-60**) ,
- the catalytic converter (see **19B**, **Exhaust**, **Catalytic converter: Removal - Refitting**, page **19B-17**) ,
- the turbocharger oil pipes (see **12B**, **Turbocharging**, **Turbocharger oil pipe: Removal - Refitting**, page **12B-22**) .

❑ Fit the tools **(Ms. 583)** onto the turbocharger cooling hoses.

❑ Disconnect the turbocharger cooling hoses.

F4R

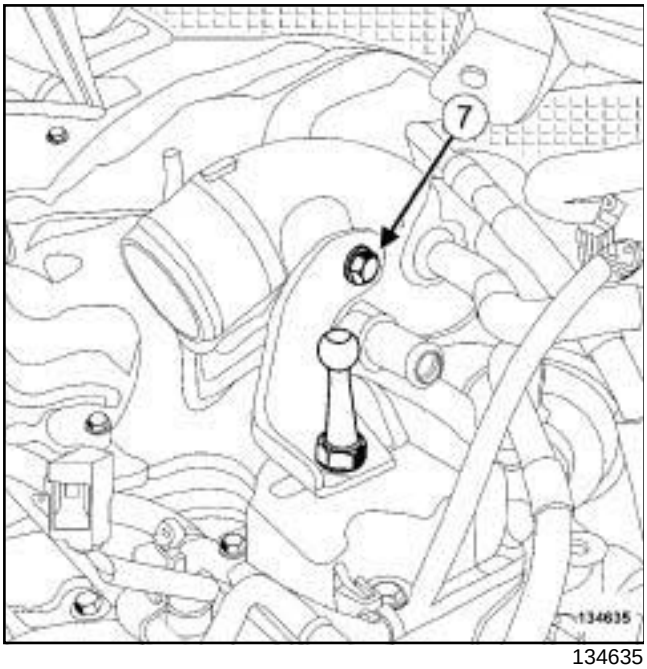

134635

❑ Remove the bolt (**7**) from the turbocharger retaining bracket.

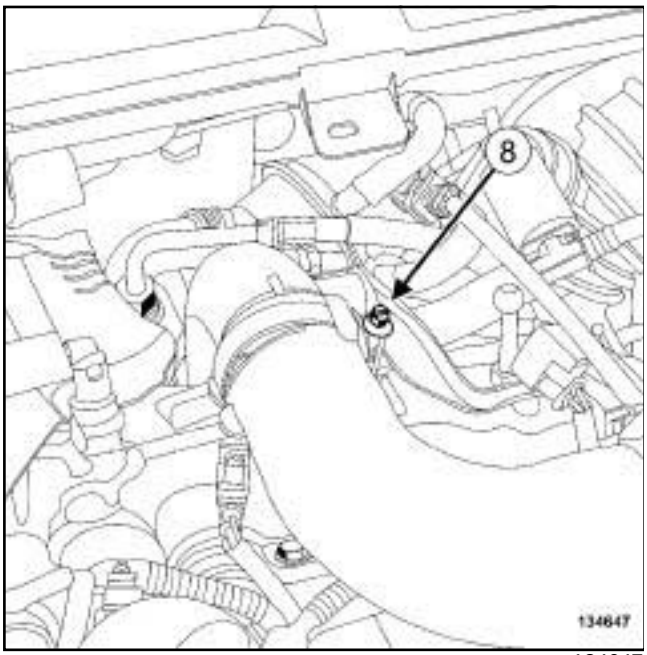

134647

❑ Loosen the clip (**8**) on the intercooler air inlet pipe.

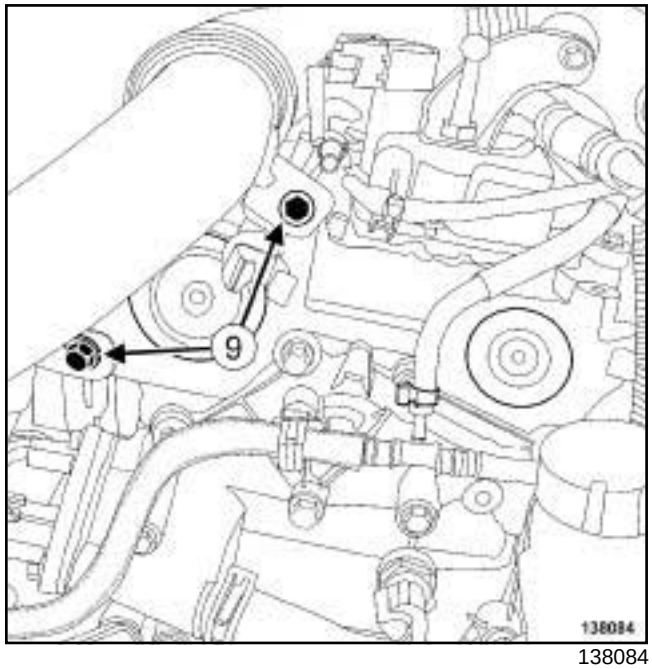

138084

❑ Remove the intercooler air inlet pipe retaining bolts (**9**) .

❑ Move the intercooler air outlet pipe to one side.

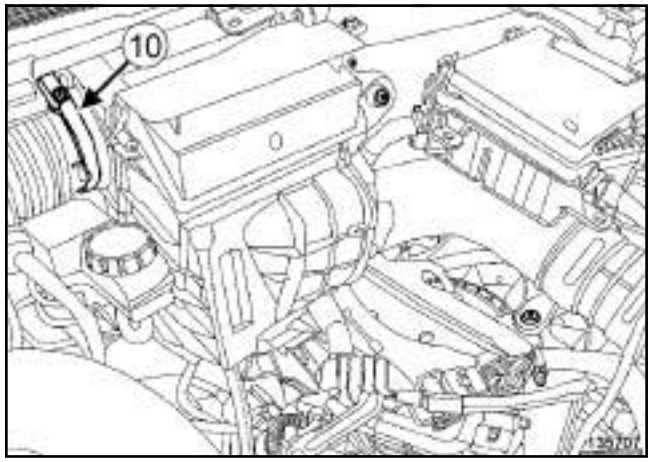

135707

❑ Loosen the air filter unit air outlet pipe clip (**10**) on the air filter unit end.

F4R

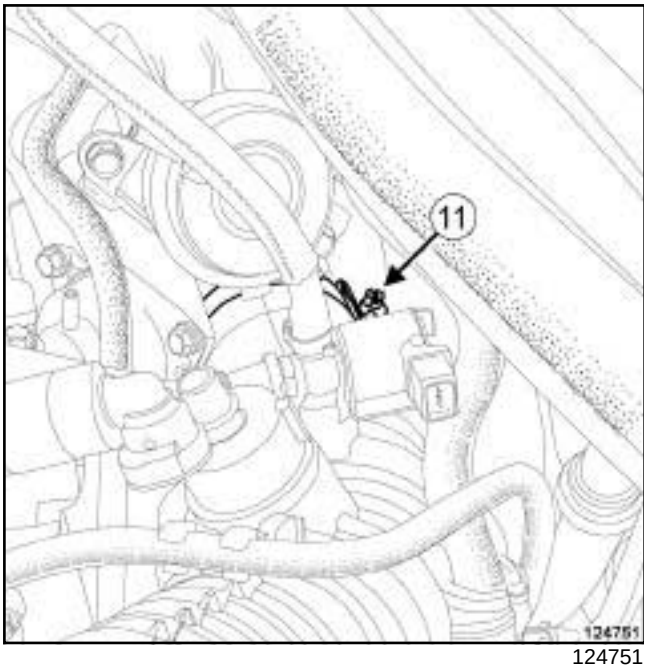

124751

❑ Undo the clip (**11**) for the air pipe at the outlet of the air filter box on the turbocharger side.

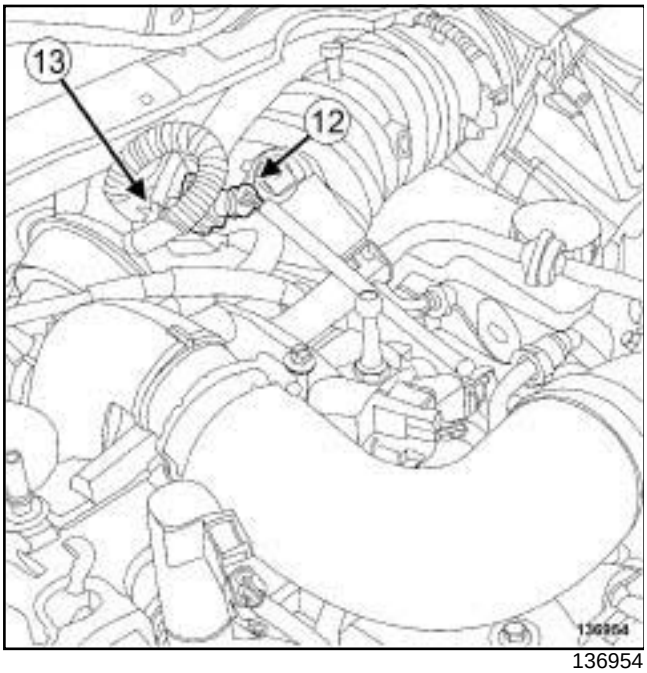

136954

❑ Disconnect the connector (**12**) from the turbocharging pressure regulation control solenoid valve.

❑ Unclip the turbocharging pressure regulation solenoid control valve at (**13**) .

❑ Remove the air outlet pipe from the air filter box.

II - OPERATION FOR REMOVAL OF PART CONCERNED

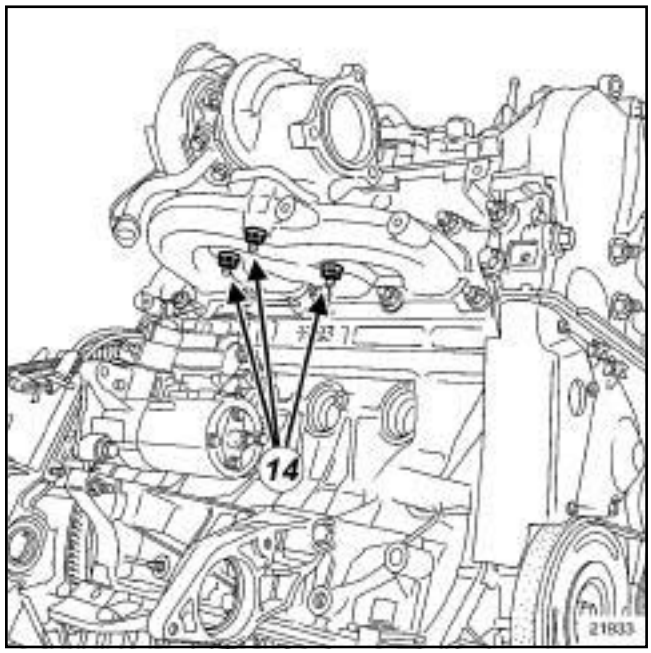

21933

❑ Remove the turbocharger lower nuts (**14**) .

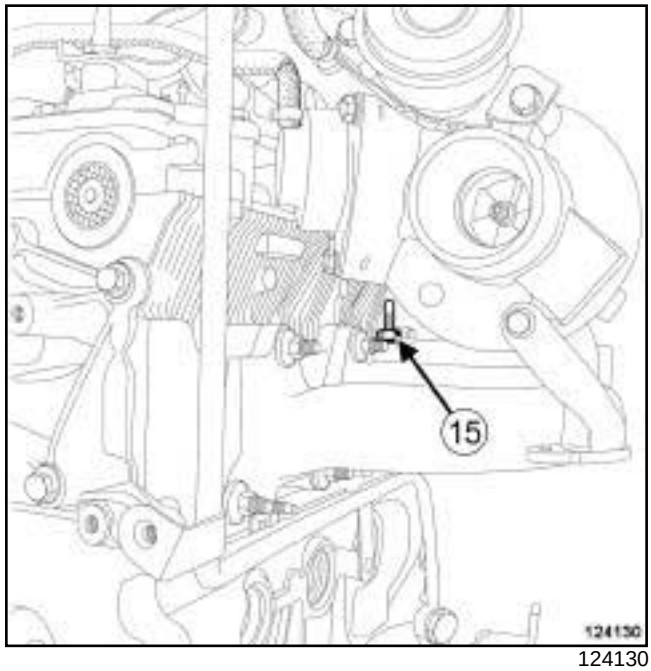

124130

❑ Remove:

- the turbocharger upper nut (**15**) ,
- the turbocharger,
- the turbocharger seal on the exhaust manifold.

F4R

REFITTING

I - REFITTING PREPARATION OPERATION

❑ **parts always to be replaced: seal between exhaust manifold and turbocharger (10,09,01,07)**.

❑ **parts always to be replaced: turbocharger oil pipe seal (10,09,03,05)**.

❑ **parts always to be replaced: Turbocharger nut (10,09,01,03)**.

❑ Use **SURFACE CLEANER** (see **Vehicle: Parts and ingredients for the repairwork**) (04B, Consumables - Products) to clean and degrease:

- the exhaust manifold joint face,
- the turbocharger gasket face if reused.

> Note:
>
> If a stud comes loose during removal, coat it with **HIGH RESISTANCE THREADLOCK** (see **Vehicle: Parts and consumables for repair**) (04B, Consumables - Products).
>
> Torque tighten the **turbocharger studs (8.5 N.m)**.

> **WARNING**
>
> Ensure that no foreign bodies enter the turbine or compressor during the refitting operation.
>
> Check that the turbocharger oil return pipe is not partially or completely blocked due to scale. Check that there are no leaks. If there are, replace the part.

If replacing the turbocharger

❑ Remove:

- the turbocharger oil return pipe bolts
- the bolts from the turbocharger cooling duct,
- the oil return pipe,
- the turbocharger cooling duct,
- the oil return pipe seals.

❑ Use **SURFACE CLEANER** (see **Vehicle: Parts and ingredients for the repairwork**) (04B, Consumables - Products) to clean and degrease the joint face of the turbocharger oil return pipe.

❑ Refit:

- a new turbocharger oil return pipe seal to the turbocharger oil return pipe,
- a new turbocharger oil return pipe to the turbocharger,
- the oil return pipe retaining bolts to the turbocharger,
- the turbocharger cooling duct,
- the turbocharger cooling duct retaining bolts.

❑ Tighten to torque:

- the **turbocharger oil return pipe bolts (12 Nm)**,
- the **turbocharger cooling duct bolts (12 N.m)**.

II - REFITTING OPERATION FOR PART CONCERNED

❑ Refit:

- a new seal between the turbocharger and the exhaust manifold,
- the turbocharger,
- a new upper nut to the turbocharger,
- new lower nuts to the turbocharger.

❑ Tighten to torque:

- the **turbocharger upper nut (15 N.m + 75° ± 6)**,
- the **turbocharger lower nuts (15 N.m + 75° ± 6)**.

III - FINAL OPERATION

❑ Refit the air outlet pipe onto the air filter unit.

❑ Tighten to torque:

- the **clip for the air filter unit air outlet pipe at the air filter unit end (6 N.m)**,
- the **clip for the air filter unit air outlet pipe at the throttle unit end (6 N.m)**.

❑ Clip:

- the turbocharging pressure regulation valve control solenoid valve,
- the vacuum pipe from the brake servo.

❑ Connect the connector for the turbocharging pressure regulation control solenoid valve.

❑ Fit:

- the air pipe at the intercooler inlet,
- the retaining bracket bolts for the intercooler air inlet pipe.

❑ Torque tighten the **clip for the intercooler air inlet pipe (6 N.m)**.

❑ Refit the bolt for the turbocharger retaining bracket.

❑ Connect the turbocharger cooling hoses.

F4R

- ❑ Remove the tools **(Ms. 583)** from the turbocharger cooling hoses.
- ❑ Refit:
  - the turbocharger oil pipes (see **12B**, **Turbocharging**, **Turbocharger oil pipe: Removal - Refitting**, page **12B-22**) ,
  - the catalytic converter (see **19B**, **Exhaust**, **Catalytic converter: Removal - Refitting**, page **19B-17**) ,
  - the bulkhead upper heat shield,
  - Refit the catalytic converter strut.
- ❑ Tighten to torque:
  - the **catalytic converter strut bolt (8 N.m)**,
  - the **catalytic converter strut nut (44 N.m)**.
- ❑ Refit the relay bearing.
- ❑ Torque tighten the **relay bearing bolts (44 N.m)**.
- ❑ Refit the lower engine tie-bar support.
- ❑ Torque tighten the **lower engine tie-bar support bolts (62 N.m)**.
- ❑ Refit:
  - the lower engine tie-bar (see **19D**, **Engine mounting**, **Lower engine tie-bar: Removal - Refitting**, page **19D-33**) ,
  - a new right-hand differential output seal (see **Differential output seal: Removal - Refitting**) (21A, Manual gearbox),
  - the front right-hand wheel driveshaft (see **Front right-hand wheel driveshaft: Removal - Refitting**) (29A, Driveshafts).
- ❑ Fill the manual gearbox (see **Manual gearbox oil: Draining - Refilling**) (21A, Manual gearbox).
- ❑ Refit:
  - the connecting hose (see **19B**, **Exhaust**, **Connecting hose: Removal - Refitting**, page **19B-60**) ,
  - the engine undertray,
  - the front section of the front right-hand wheel arch liner (see **Front wheel arch liner: Removal - Refitting**) (55A, Exterior protection),
  - the front right-hand wheel (see **Wheel: Removal - Refitting**) (35A, Wheels and tyres),
  - the lifting eye,
  - the turbocharger heat shield.
- ❑ Refit:
  - the scoop under the scuttle panel grille (see **Scoop under scuttle panel grille: Removal - Refitting**) (56A, Exterior equipment),
  - the scuttle panel grille (see **Scuttle panel grille: Removal - Refitting**) (56A, Exterior equipment),
  - the windscreen wiper arms (see **Rear screen wiper arm: Removal - Refitting**) (85A, Wiping - Washing).
- ❑ Connect the battery (see **Battery : Removal - Refitting**) (80A, Battery).
- ❑ Refit the engine cover.

K9K, and 836

Tightening torques ▽	
turbocharger studs on the exhaust manifold	**9 N.m**
turbocharger stud on the turbocharger	**9 N.m**
turbocharger nuts	**28 N.m**

REMOVAL

I - REMOVAL PREPARATION OPERATION

❑ Position the vehicle on a two-post lift (see **Vehicle: Towing and lifting**) (02A, Lifting equipment).

❑ Remove:

- the engine cover,
- the engine undertray bolts,
- the engine undertray,
- the exhaust gases duct at the turbocharger outlet (see **12B**, **Turbocharging**, **Turbocharger outlet exhaust gas duct: Removal - Refitting**, page **12B-49**) ,
- the turbocharger oil supply pipe (see **12B**, **Turbocharging**, **Turbocharger oil pipe: Removal - Refitting**, page **12B-22**) ,
- the turbocharger oil return pipe (see **12B**, **Turbocharging**, **Turbocharger oil pipe: Removal - Refitting**, page **12B-22**) ,
- the exhaust gas recirculation rigid pipe (see **14A**, **Antipollution**, **Exhaust gas recirculation rigid pipe: Removal - Refitting**, page **14A-30**) ,
- the exhaust gas recirculation assembly (see **14A**, **Antipollution**, **Exhaust gas recirculation assembly: Removal - Refitting**, page **14A-18**) .

II - OPERATION FOR REMOVAL OF PART CONCERNED

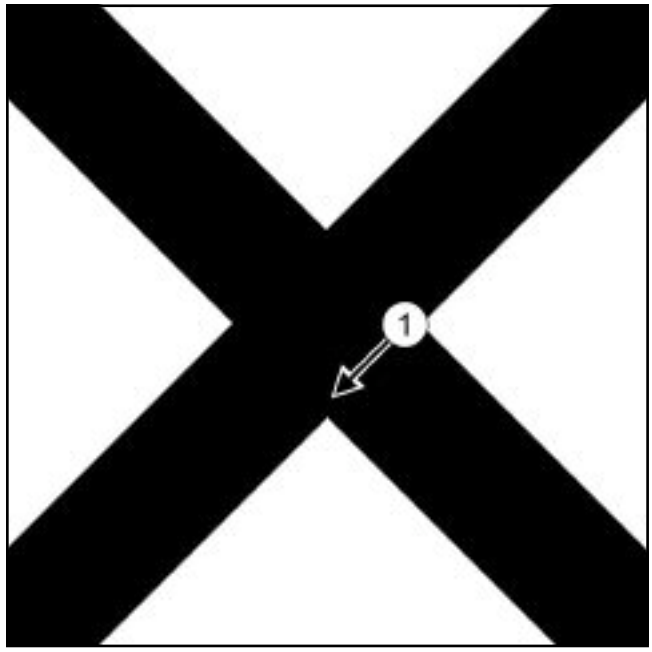

100000-1

❑ Remove:

- the turbocharger nuts (**1**) ,
- the turbocharger,
- the turbocharger seal.

REFITTING

I - REFITTING PREPARATION OPERATION

❑

> **WARNING**
> Ensure that no foreign bodies enter the turbine or compressor during the refitting operation.
>
> Check that the turbocharger oil return pipe is not partially or completely blocked by scale. Check that there are no leaks. If there are, replace the part.

> **WARNING**
> Following a turbocharger fault, check that the intercooler and air circuit assembly are not full of oil. If they are, remove them and clean them with a cleaning tray or station and dry them with a compressed air gun.

❑ **parts always to be replaced: seal between exhaust manifold and turbocharger (10,09,01,07)**.

K9K, and 836

- Use **ABRASIVE PADS** to clean the joint faces:
  - the exhaust manifold,
  - of the turbocharger if reused.
- Use **SURFACE CLEANER** (see **Vehicle: Parts and ingredients for the repairwork**) (04B, Consumables - Products) and **CLEAN CLOTHS** to clean and degrease the joint faces:
  - the exhaust manifold,
  - of the turbocharger if reused.
- When replacing the turbocharger studs, torque tighten:
  - the **turbocharger studs on the exhaust manifold (9 N.m)**,
  - the **turbocharger stud on the turbocharger (9 N.m)**.

II - REFITTING OPERATION FOR PART CONCERNED

- Refit the turbocharger fitted with a new seal.
- Torque tighten the **turbocharger nuts (28 N.m)**.

III - FINAL OPERATION

- Refit:
  - the exhaust gas recirculation assembly (see **14A**, **Antipollution**, **Exhaust gas recirculation assembly: Removal - Refitting**, page **14A-18**) ,
  - the exhaust gas recirculation rigid pipe (see **14A**, **Antipollution**, **Exhaust gas recirculation rigid pipe: Removal - Refitting**, page **14A-30**) ,
  - the turbocharger oil return pipe (see **12B**, **Turbocharging**, **Turbocharger oil pipe: Removal - Refitting**, page **12B-22**) ,
  - the turbocharger oil supply pipe (see **12B**, **Turbocharging**, **Turbocharger oil pipe: Removal - Refitting**, page **12B-22**) ,
  - the exhaust gases duct at the turbocharger outlet (see **12B**, **Turbocharging**, **Turbocharger outlet exhaust gas duct: Removal - Refitting**, page **12B-49**) ,
  - the engine undertray,
  - the engine cover.

Turbocharger oil pipe: Removal - Refitting

K9K, and 830 or 832

Essential special tooling	
Mot. 1566	Spanner for removing high pressure pipes.
Mot. 1746	Offset spanner for tightening high pressure pump pipes.

Essential equipment
self-contained starter
diagnostic tool

Tightening torques ▽	
turbocharger oil supply pipe nut on the cylinder head	**35 N.m**
turbocharger oil supply pipe hollow bolt	**14 N.m**
clip for the air filter unit air outlet pipe clip on the turbocharger	**5.5 N.m**
clip for the air filter unit air outlet pipe on the air filter unit	**5.5 N.m**
turbocharger oil return pipe bolts	**12 N.m**

Note:

This procedure deals with removing and refitting the turbocharger oil return pipe and the turbocharger oil supply pipe.

IMPORTANT

Wear leaktight gloves (Nitrile type) for this operation.

IMPORTANT

Wear protective gloves during the operation.

WARNING

Ensure that no foreign bodies enter the turbine or compressor during the refitting operation.

Check that the turbocharger oil return pipe is not partially or completely blocked by scale. Check that there are no leaks. If there are, replace the part.

WARNING

Metal objects may enter the oil and air circuits as a result of a broken turbocharger.

Failure to observe the following instructions will lead to the turbocharger breaking again.

REMOVING THE TURBOCHARGER OIL SUPPLY PIPE

I - REMOVAL PREPARATION OPERATION

❑ Disconnect the battery (see **Battery : Removal - Refitting**) (80A, Battery).

❑ Remove the front engine cover.

K9K, and 832

❑ Disconnect:

- the oil vapour rebreathing pipe union from the air filter unit air outlet pipe,
- the oil vapour rebreathing pipe from the rocker cover.

❑ Remove the oil vapour rebreathing pipe.

K9K, and 830 or 832

K9K, and 830

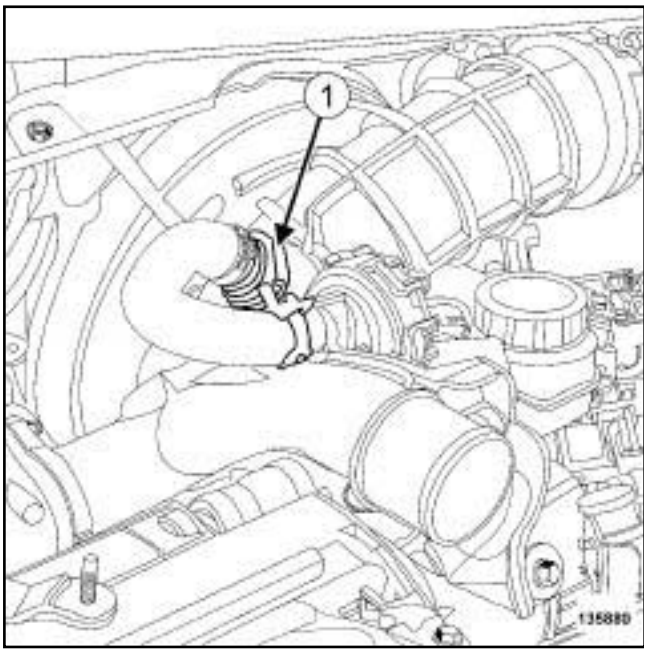

135880

❑ Disconnect the oil vapour rebreathing pipe from the air filter unit air outlet pipe (**1**) .

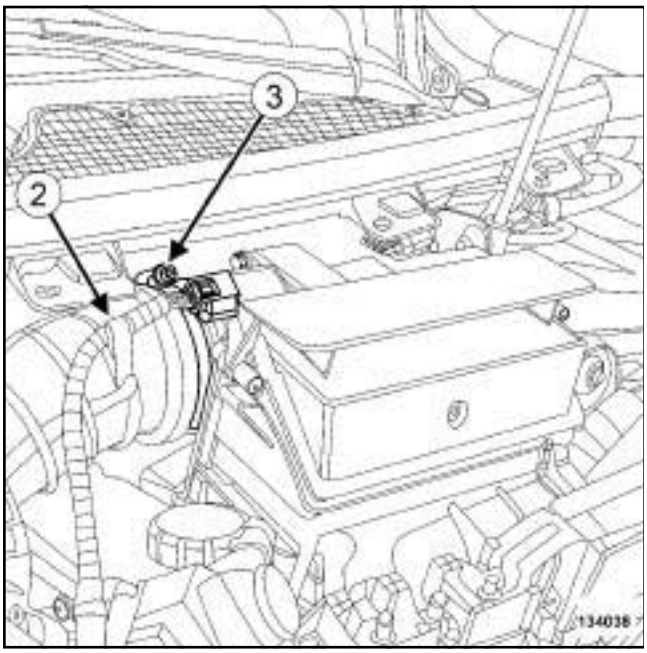

134038

❑ Unclip the air flowmeter wiring from the air filter unit air outlet pipe at (**2**) .

❑ Loosen the clip (**3**) of the air filter unit air outlet pipe from the air filter unit.

❑ Disconnect the air filter unit air outlet pipe from the air filter unit.

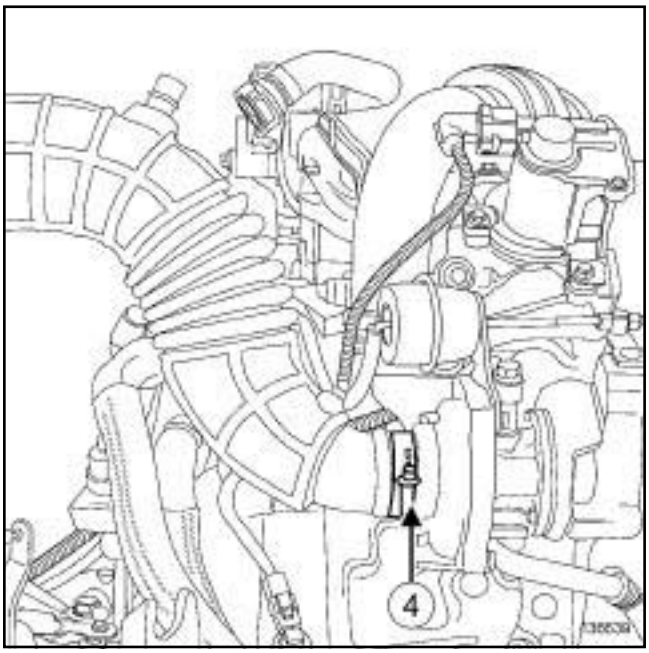

136639

❑ Undo the air filter unit air outlet pipe clip (**4**) from the turbocharger.

❑ Disconnect the air filter unit air outlet pipe from the turbocharger.

❑ Remove the air outlet pipe from the air filter box.

K9K, and 830 or 832

II - OPERATION FOR REMOVAL OF PART CONCERNED

K9K, and 832

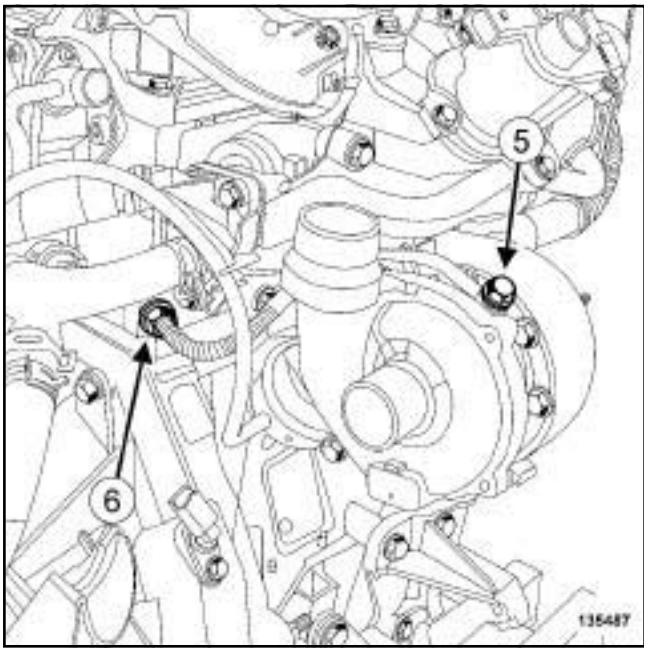

135487

- ❑ Remove the turbocharger oil supply pipe hollow bolt (**5**) .
- ❑ Loosen the nut (**6**) for the turbocharger oil supply pipe on the cylinder head, using the tool **(Mot. 1566)** or the tool **(Mot. 1746)**.
- ❑ Remove the nut (**6**) for the turbocharger oil supply pipe from the cylinder head.

K9K, and 830

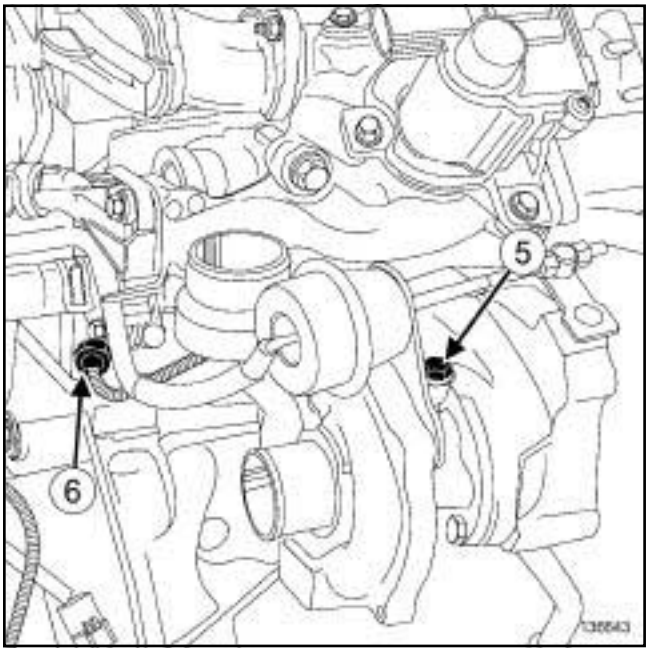

136643

- ❑ Remove the turbocharger oil supply pipe hollow bolt (**5**) .
- ❑ Loosen the nut (**6**) for the turbocharger oil supply pipe on the cylinder head, using the tool **(Mot. 1566)** or the tool **(Mot. 1746)**.
- ❑ Remove the nut (**6**) for the turbocharger oil supply pipe from the cylinder head.

- ❑ Remove the turbocharger oil supply pipe.
- ❑ Wipe away any oil run-off.

REFITTING THE TURBOCHARGER OIL SUPPLY PIPE

I - REFITTING PREPARATION OPERATION

- ❑ **parts always to be replaced: turbocharger oil supply pipe (10,09,03,01)**.
- ❑ **parts always to be replaced: Turbocharger oil supply pipe bolt (10,09,03,04)**.

II - REFITTING OPERATION FOR PART CONCERNED

- ❑ Fit a new turbocharger oil supply pipe.
- ❑ Fit the nut for the new turbocharger oil supply pipe to the cylinder head, without tightening it.

K9K, and 830 or 832

- ❑ Refit a new hollow bolt for the turbocharger oil supply pipe bolt on the turbocharger.
- ❑ Tighten to torque:
  - the **turbocharger oil supply pipe nut on the cylinder head (35 N.m)** using the tool **(Mot. 1566)** or the tool **(Mot. 1746)**,
  - the **turbocharger oil supply pipe hollow bolt (14 N.m)**,

III - FINAL OPERATION

- ❑ Fit the air filter unit air outlet pipe.
- ❑ Connect the air filter unit air outlet pipe to the turbocharger.
- ❑ Torque tighten the **clip for the air filter unit air outlet pipe clip on the turbocharger (5.5 N.m)**.
- ❑ Connect the air filter unit air outlet pipe to the air filter unit.
- ❑ Torque tighten the **clip for the air filter unit air outlet pipe on the air filter unit (5.5 N.m)**.
- ❑ Clip the air flowmeter wiring onto the air filter unit air outlet pipe.

K9K, and 832

- ❑ Fit the oil vapour rebreathing pipe.
- ❑ Connect the oil vapour rebreathing pipe onto the rocker cover.

- ❑ Connect the oil vapour rebreathing union to the air filter unit air outlet pipe.
- ❑ Refit the engine cover.
- ❑ Connect the battery (see **Battery : Removal - Refitting**) (80A, Battery).
- ❑ Disconnect the high pressure pump flow actuator connector and the connector for each diesel fuel injector in order to prevent the engine from starting.
- ❑ Connect a **self-contained starter**.
- ❑ Run the starter until the oil pressure warning light goes out on the instrument panel (wait for a few seconds).
- ❑ Switch off the ignition.
- ❑ Disconnect the **self-contained starter**.
- ❑ Connect the high pressure pump flow actuator connector and the connector for each diesel fuel injector.
- ❑ Start the engine.
- ❑ Let the engine idle then depress the accelerator several times with no load.
- ❑ Switch off the ignition.
- ❑ Check:
  - that the turbocharger is operating correctly,
  - that there are no oil leaks from the turbocharger.
- ❑ Use the **diagnostic tool** to check for an absence of stored faults; deal with these and clear them as necessary.

REMOVING THE TURBOCHARGER OIL RETURN PIPE

I - REMOVAL PREPARATION OPERATION

- ❑ Position the vehicle on a two-post lift (see **Vehicle: Towing and lifting**) (02A, Lifting equipment).
- ❑ Disconnect the battery (see **Battery : Removal - Refitting**) (80A, Battery).
- ❑ Remove:
  - the engine undertray bolts,
  - the engine undertray.

K9K, and 830

- ❑ Remove the lower engine tie-bar (see **19D**, **Engine mounting**, **Lower engine tie-bar: Removal - Refitting**, page **19D-33**) .

- ❑ Remove the catalytic converter (see **19B**, **Exhaust**, **Catalytic converter: Removal - Refitting**, page **19B-17**) .

K9K, and 830 or 832

II - OPERATION FOR REMOVAL OF PART CONCERNED

K9K, and 832

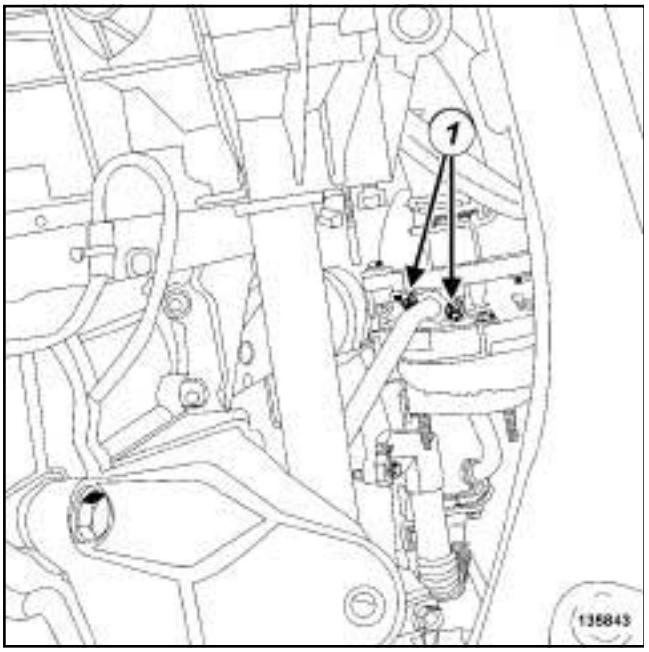

135843

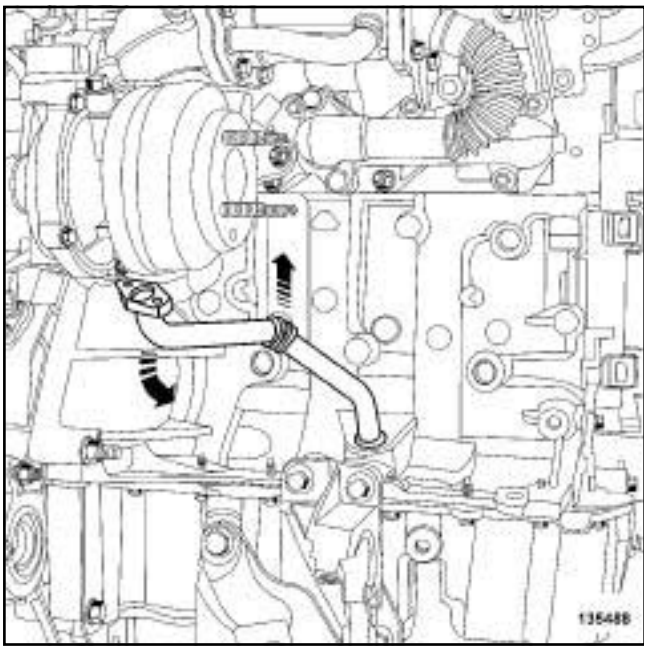

135488

❑ Remove the turbocharger oil return pipe bolts (**1**) .

K9K, and 830

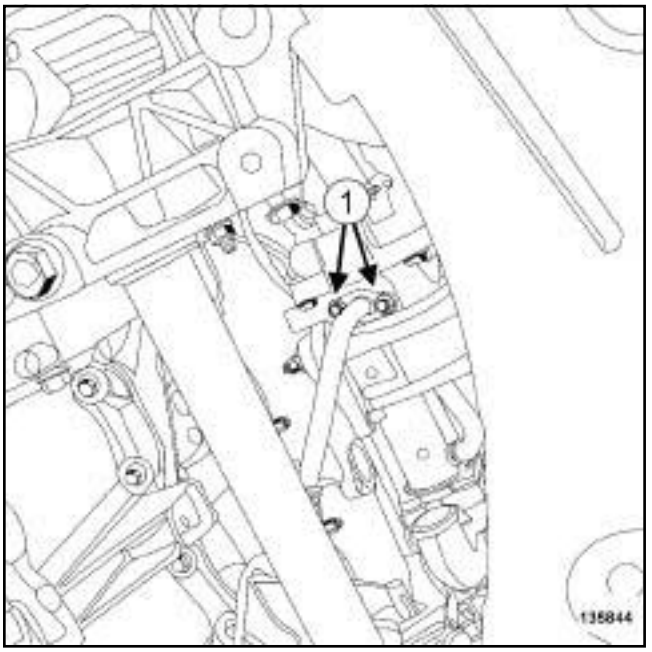

135844

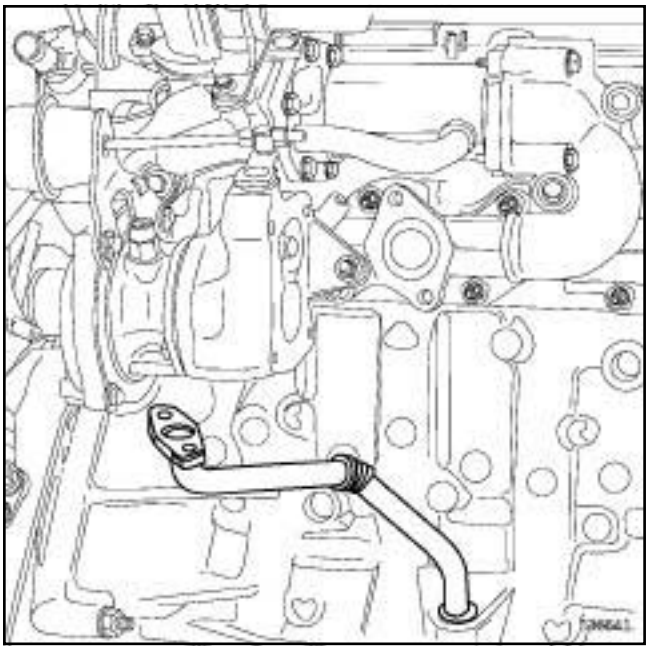

136641

❑ Remove the turbocharger oil return pipe bolts (**1**) .

❑ Turn the turbocharger oil return pipe to facilitate its removal.

❑ Extract the turbocharger oil return pipe from the cylinder block.

K9K, and 830 or 832

REFITTING THE TURBOCHARGER OIL RETURN PIPE

I - REFITTING PREPARATION OPERATION

- ❑ **parts always to be replaced: turbocharger oil pipe seal (10,09,03,05)**.
- ❑ Lubricate the new turbocharger oil return pipe O-ring with clean engine oil.

II - REFITTING OPERATION FOR PART CONCERNED

- ❑ Fit a new turbocharger oil return pipe equipped with a new seal.
- ❑ Refit the turbocharger oil return pipe bolts.
- ❑ Torque tighten the **turbocharger oil return pipe bolts (12 N.m)**.

III - FINAL OPERATION

- ❑ Refit the catalytic converter (see **19B**, **Exhaust**, **Catalytic converter: Removal - Refitting**, page **19B-17**) .

K9K, and 830

- ❑ Refit the lower engine tie-bar (see **19D**, **Engine mounting**, **Lower engine tie-bar: Removal - Refitting**, page **19D-33**) .

- ❑ Refit the engine undertray.
- ❑ Connect the battery (see **Battery : Removal - Refitting**) (80A, Battery).

F9Q

Tightening torques ▽	
turbocharger oil supply pipe hollow bolt on the cylinder block	**44 N.m**
turbocharger oil supply pipe hollow bolt on the turbocharger	**12 N.m**
turbocharger oil return pipe bolts on the turbocharger	**11 N.m**
turbocharger oil return pipe bolt on the cylinder block	**44 N.m**
bolts of the bracket for the exhaust gases duct at the outlet of the turbocharger	**44 N.m**

REMOVING THE TURBOCHARGER OIL SUPPLY PIPE

I - REMOVAL PREPARATION OPERATION

❑ Position the vehicle on a two-post lift (see **Vehicle: Towing and lifting**) (02A, Lifting equipment).

❑ Remove:

- the engine cover,
- the engine undertray bolts,
- the engine undertray,
- the windscreen wiper arms (see **Windscreen wiper arm: Removal - Refitting**) (85A, Wiping - Washing),
- the scuttle panel grille (see **Scuttle panel grille: Removal - Refitting**) (56A, Exterior equipment),
- the scoop under the scuttle panel grille (see **Scoop under scuttle panel grille: Removal - Refitting**) (56A, Exterior equipment),
- the battery (see **Battery: Removal - Refitting**) (80A, Battery),
- the battery tray (see **Battery tray: Removal - Refitting**) (80A, Battery),
- the intercooler air inlet pipe (see **12B**, **Turbocharging**, **Intercooler air inlet pipe: Removal - Refitting**, page **12B-41**) .

II - OPERATION FOR REMOVAL OF PART CONCERNED

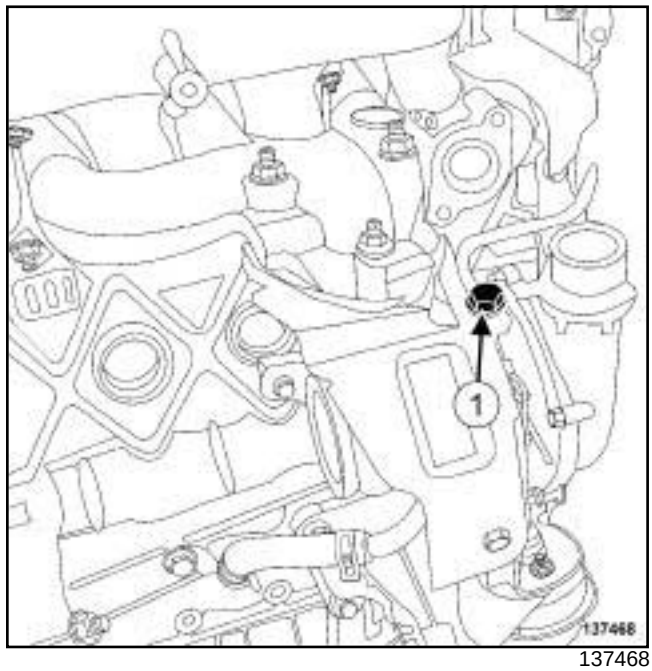

137468

❑ Remove the hollow bolt for the turbocharger oil supply pipe (**1**) from the turbocharger.

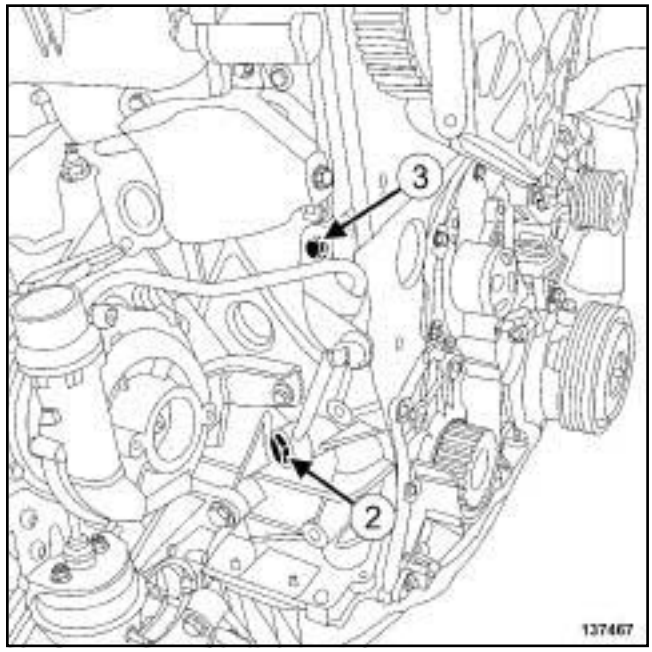

137467

❑ Remove:

- the turbocharger oil supply pipe hollow bolt (**2**) from the cylinder block,
- the turbocharger oil supply pipe bolt (**3**) ,
- the turbocharger oil supply pipe.

F9Q

REFITTING THE TURBOCHARGER OIL SUPPLY PIPE

I - REFITTING OPERATION FOR PART CONCERNED

❏ Refit the turbocharger oil supply pipe.

❏ Fit without tightening:

- the turbocharger oil supply pipe hollow bolt onto the cylinder block,
- the turbocharger oil supply pipe hollow bolt to the turbocharger,
- the turbocharger oil supply pipe bolt.

❏ Tighten to torque:

- the **turbocharger oil supply pipe hollow bolt on the cylinder block (44 N.m)**,
- the **turbocharger oil supply pipe hollow bolt on the turbocharger (12 N.m)**.

❏ Torque tighten the turbocharger oil supply pipe bolt.

II - FINAL OPERATION

❏ Refit:

- the intercooler air inlet pipe (see **12B**, **Turbocharging**, **Intercooler air inlet pipe: Removal - Refitting**, page **12B-41**) ,
- the battery tray (see **Battery tray: Removal - Refitting**) (80A, Battery),
- the battery (see **Battery : Removal - Refitting**) (80A, Battery),
- the scoop under the scuttle panel grille (see **Scoop under scuttle panel grille: Removal - Refitting**) (56A, Exterior equipment),
- the scuttle panel grille (see **Scuttle panel grille: Removal - Refitting**) (56A, Exterior equipment),
- the windscreen wiper arms (see **Windscreen wiper arm: Removal - Refitting**) (85A, Wiping - Washing),
- the engine undertray,
- the engine cover.

REMOVING THE TURBOCHARGER OIL RETURN PIPE

I - REMOVAL PREPARATION OPERATION

❏ Position the vehicle on a two-post lift (see **Vehicle: Towing and lifting**) (02A, Lifting equipment).

❏ Remove:

- the engine undertray bolts,
- the engine undertray.

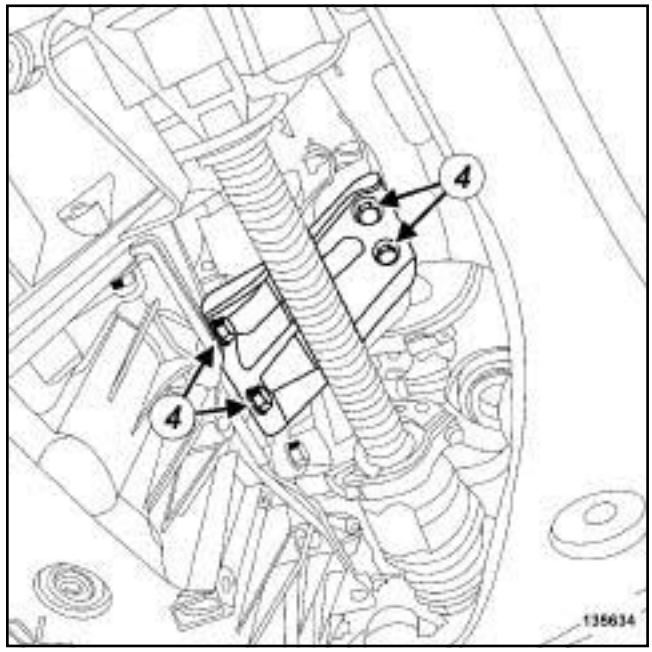

135634

❏ Remove:

- the bolts (**4**) from the bracket of the exhaust gases duct at the outlet of the turbocharger,
- the bracket from the exhaust gases duct at the outlet of the turbocharger.

F9Q

II - OPERATION FOR REMOVAL OF PART CONCERNED

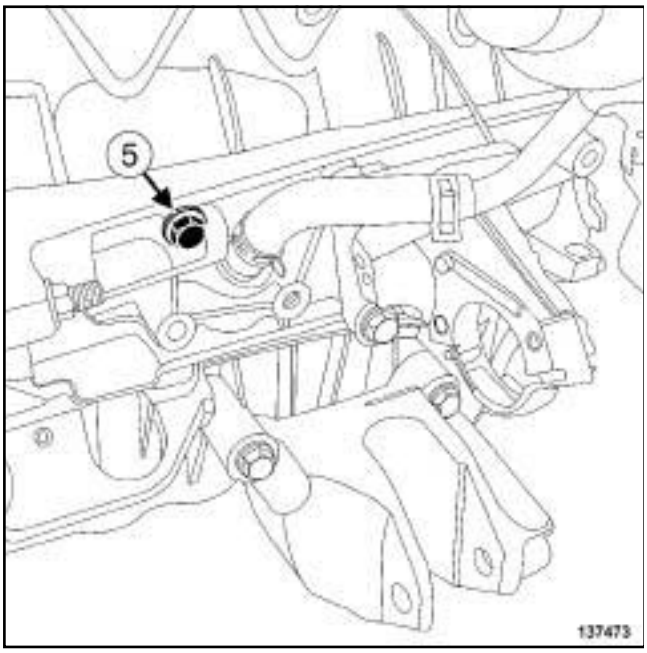

137473

❑ Remove the turbocharger oil return pipe bolt (**5**) from the cylinder block.

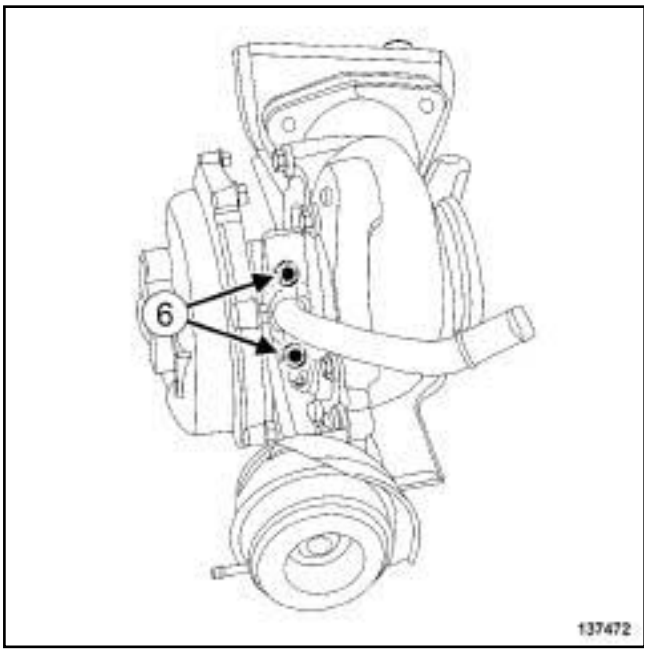

137472

❑ Remove:

- the turbocharger oil return pipe bolts (**6**) from the turbocharger,
- the turbocharger oil return pipe.

REFITTING THE TURBOCHARGER OIL RETURN PIPE

I - REFITTING PREPARATION OPERATION

❑ Always replace:

- the turbocharger oil return pipe seal on the cylinder block,
- the turbocharger oil return pipe seal on the turbocharger.

II - REFITTING OPERATION FOR PART CONCERNED

❑ Refit the turbocharger oil return pipe, fitted with new seals.

❑ Tighten to torque:

- the **turbocharger oil return pipe bolts on the turbocharger (11 N.m)**,
- the **turbocharger oil return pipe bolt on the cylinder block (44 N.m)**.

III - FINAL OPERATION

❑ Refit the bracket for the exhaust gases duct at the outlet of the turbocharger.

❑ Torque tighten the **bolts of the bracket for the exhaust gases duct at the outlet of the turbocharger (44 N.m)**.

❑ Refit the engine undertray.

Turbocharger oil pipe: Removal - Refitting

F4R

Essential special tooling	
Ms. 583	Hose clamp pliers.
Mot. 1448	Long nose pliers for hose clips.

Tightening torques ▽	
turbocharger oil supply pipe hollow bolt on the cylinder block	**45 Nm**
turbocharger oil supply pipe union on the turbocharger	**25 N.m**
oil supply pipe bolt on the cylinder block	**25 N.m**
turbocharger cooling pipe hollow bolts (initial torque)	**12 N.m**
hollow bolts of the turbocharger cooling pipe on the turbocharger	**27 N.m**
bolt for the turbocharger oil pipe heat shield on the coolant pipe housing outlet	**10 N.m**
turbocharger oil return pipe bolts on the turbocharger	**8 Nm**
turbocharger oil return pipe bolt on the cylinder block	**25 Nm**

IMPORTANT

Wear protective gloves during the operation.

WARNING

Prepare for the flow of fluid, and protect the surrounding components.

Note:

This procedure deals with removing and refitting the turbocharger oil supply pipe and the turbocharger oil return pipe.

REMOVING THE TURBOCHARGER OIL SUPPLY PIPE

I - REMOVAL PREPARATION OPERATION

❏ Position the vehicle on a two-post lift (see **Vehicle: Towing and lifting**) (02A, Lifting equipment).

❏ Disconnect the battery (see **Battery : Removal - Refitting**) (80A, Battery).

❏ Remove:

- the engine cover,
- the engine undertray bolts,
- the engine undertray,
- the windscreen wiper arms (see **Windscreen wiper arm: Removal - Refitting**) (85A, Wiping - Washing),
- the scuttle panel grille (see **Scuttle panel grille: Removal - Refitting**) (56A, Exterior equipment),
- the scoop under the scuttle panel grille (see **Scoop under scuttle panel grille: Removal - Refitting**) (56A, Exterior equipment),
- the upstream oxygen sensor (see **17B**, **Petrol injection**, **Oxygen sensors: Removal - Refitting**, page **17B-1**) ,
- the front right-hand wheel (see **Wheel: Removal - Refitting**) (35A, Wheels and tyres),
- the front section of the front right-hand wheel arch liner (see **Front wheel arch liner: Removal - Refitting**) (55A, Exterior protection).

❏ Drain the manual gearbox (see **Manual gearbox oil: Draining - Refilling**) (21A, Manual gearbox).

❏ Remove:

- the front right-hand wheel driveshaft (see **Front right-hand wheel driveshaft: Removal - Refitting**) (29A, Driveshafts),
- the right-hand differential output seal (see **Differential output seal: Removal - Refitting**) (21A, Manual gearbox),
- the lower engine tie-bar (see **19D**, **Engine mounting**, **Lower engine tie-bar: Removal - Refitting**, page **19D-33**) ,

F4R

- the exhaust connecting hose (see **19B**, **Exhaust**, **Connecting hose: Removal - Refitting**, page **19B-60**) ,
- the catalytic converter (see **19B**, **Exhaust**, **Catalytic converter: Removal - Refitting**, page **19B-17**) .

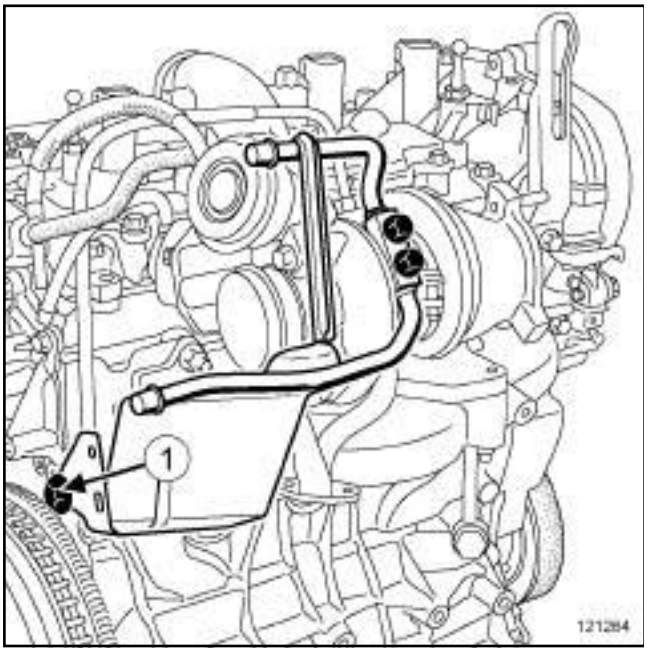

121264

❑ Remove the bolt (**1**) from the turbocharger cooling pipe heat shield on the coolant pipe housing outlet.

❑ Fit the tools **(Ms. 583)** onto the turbocharger cooling hoses.

❑ Remove the turbocharger cooling hose clips using the tool **(Mot. 1448)**.

❑ Disconnect the turbocharger cooling hoses.

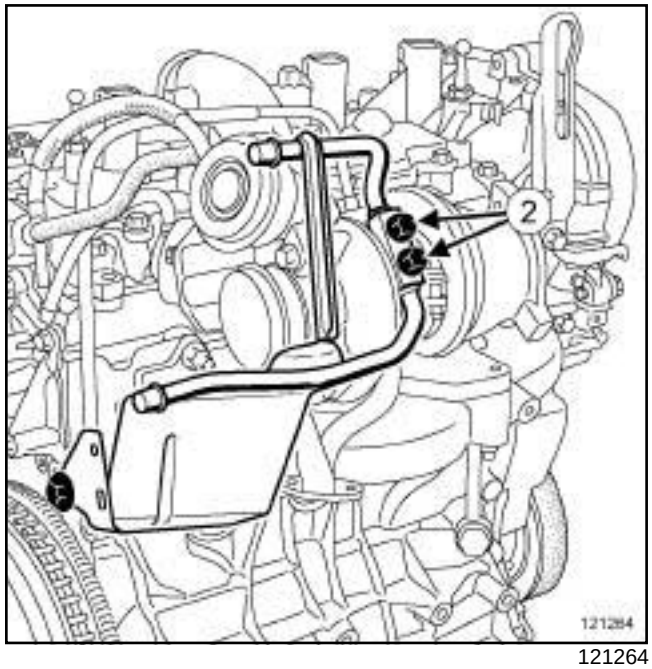

121264

❑ Remove:

- the hollow bolts (**2**) from the cooling pipe on the turbocharger,
- the turbocharger cooling pipe.

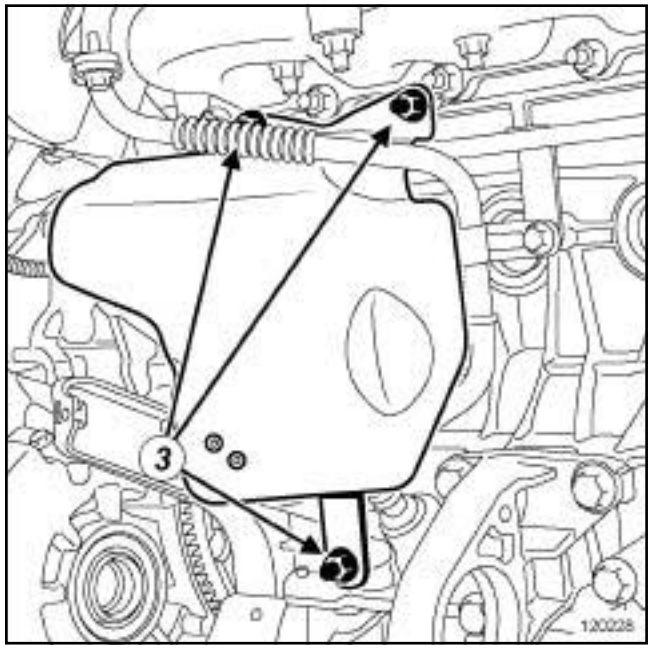

120228

❑ Remove:

- the nuts (**3**) from the starter heat shield,
- the starter heat shield.

F4R

II - OPERATION FOR REMOVAL OF PART CONCERNED

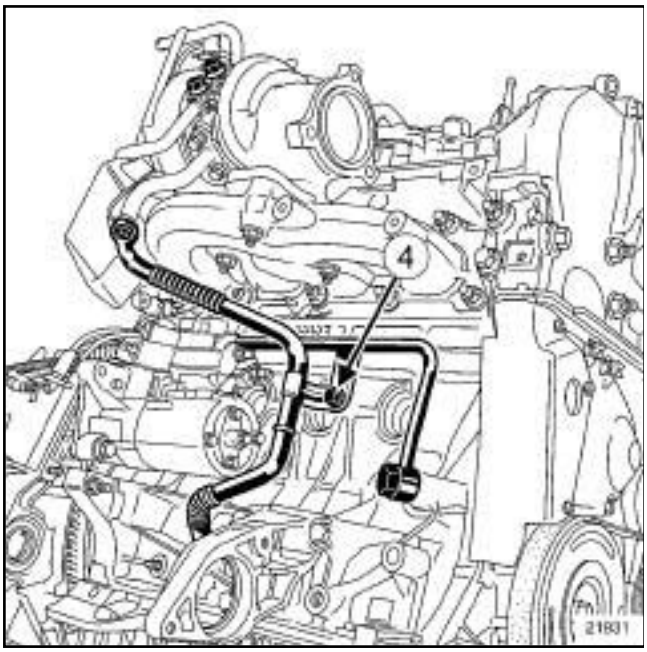

21931

❑ Remove the bolt (**4**) securing the turbocharger oil supply pipe to the cylinder block.

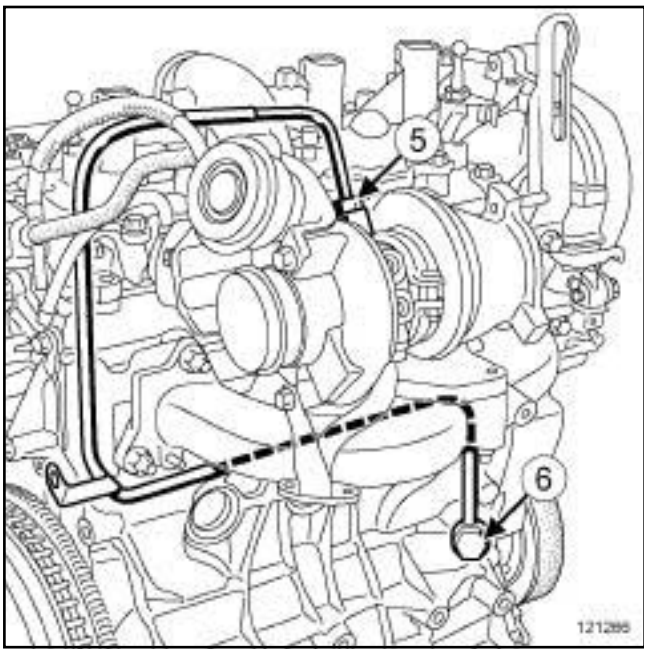

121266

❑ Undo the turbocharger oil supply pipe union (**5**) on the turbocharger.

❑ Remove:

- the turbocharger oil supply pipe hollow bolt (**6**) on the cylinder block,
- the turbocharger oil supply pipe,
- the turbocharger oil supply pipe seals.

REFITTING THE TURBOCHARGER OIL SUPPLY PIPE

I - REFITTING PREPARATION OPERATION

❑ **parts always to be replaced: turbocharger oil pipe seal (10,09,03,05)**.

❑ **parts always to be replaced: turbocharger rigid cooling pipe seal (10,09,01,09)**.

❑ Remove the turbocharger cooling pipe seals.

❑ Use **SURFACE CLEANER** (see **Vehicle: Parts and ingredients for the repairwork**) (04B, Consumables - Products) to clean and degrease:

- the cylinder block joint face around the turbocharger oil supply pipe hollow bolt,
- the turbocharger joint face around the turbocharger cooling pipe hollow bolts.

❑ Refit new seals on the turbocharger cooling pipe.

II - REFITTING OPERATION FOR PART CONCERNED

❑ Refit the turbocharger oil supply pipe.

❑ Fit without tightening:

- the turbocharger oil supply pipe union on the turbocharger,
- the turbocharger oil supply pipe hollow bolt onto the cylinder block,
- the bolt securing the turbocharger oil supply pipe to the cylinder block.

❑ Tighten to torque:

- the **turbocharger oil supply pipe hollow bolt on the cylinder block (45 Nm)**,
- the **turbocharger oil supply pipe union on the turbocharger (25 N.m)**,
- the **oil supply pipe bolt on the cylinder block (25 N.m)**.

III - FINAL OPERATION

❑ Refit:

- the heat shield to the starter,
- the turbocharger cooling pipe,
- the turbocharger cooling pipe hollow bolts on the turbocharger.

❑ Pre-tighten to torque the **turbocharger cooling pipe hollow bolts (initial torque) (12 N.m)**.

F4R

- ❑ Tighten to torque:
  - the **hollow bolts of the turbocharger cooling pipe on the turbocharger (27 N.m)**,
  - the **bolt for the turbocharger oil pipe heat shield on the coolant pipe housing outlet (10 N.m)**.
- ❑ Connect the turbocharger cooling hoses.
- ❑ Fit the turbocharger cooling hose clips using the tool **(Mot. 1448)**.
- ❑ Remove the tools **(Ms. 583)** from the turbocharger cooling hoses.
- ❑ Refit:
  - the catalytic converter (see **19B**, **Exhaust**, **Catalytic converter: Removal - Refitting**, page **19B-17**) ,
  - the exhaust connecting hose (see **19B**, **Exhaust**, **Connecting hose: Removal - Refitting**, page **19B-60**) ,
  - the lower engine tie-bar (see **19D**, **Engine mounting**, **Lower engine tie-bar: Removal - Refitting**, page **19D-33**) ,
  - a new right-hand differential output seal (see **Differential output seal: Removal - Refitting**) (21A, Manual gearbox),
  - the front right-hand wheel driveshaft (see **Front right-hand wheel driveshaft: Removal - Refitting**) (29A, Driveshafts).
- ❑ Fill the manual gearbox (see **Manual gearbox oil: Draining - Refilling**) (21A, Manual gearbox).
- ❑ Refit:
  - the front section of the front right-hand wheel arch liner (see **Front wheel arch liner: Removal - Refitting**) (55A, Exterior protection),
  - the front right-hand wheel (see **Wheel: Removal - Refitting**) (35A, Wheels and tyres),
  - the upstream oxygen sensor (see **17B**, **Petrol injection**, **Oxygen sensors: Removal - Refitting**, page **17B-1**) ,
  - the scoop under the scuttle panel grille (see **Scoop under scuttle panel grille: Removal - Refitting**) (56A, Exterior equipment),
  - the scuttle panel grille (see **Scuttle panel grille: Removal - Refitting**) (56A, Exterior equipment),
  - the windscreen wiper arms (see **Windscreen wiper arm: Removal - Refitting**) (85A, Wiping - Washing),
  - the engine undertray,
  - the engine cover.
- ❑ Connect the battery (see **Battery : Removal - Refitting**) (80A, Battery).
- ❑ Top up the coolant and carry out the bleed operation (see **19A**, **Cooling**, **Cooling circuit: Draining - Refilling**, page **19A-17**) .

REMOVING THE TURBOCHARGER OIL RETURN PIPE

I - REMOVAL PREPARATION OPERATION

- ❑ Position the vehicle on a two-post lift (see **Vehicle: Towing and lifting**) (02A, Lifting equipment).
- ❑ Disconnect the battery (see **Battery : Removal - Refitting**) (80A, Battery).
- ❑ Remove:
  - the engine cover,
  - the engine undertray bolts,
  - the engine undertray,
  - the windscreen wiper arms (see **Windscreen wiper arm: Removal - Refitting**) (85A, Wiping - Washing),
  - the scuttle panel grille (see **Scuttle panel grille: Removal - Refitting**) (56A, Exterior equipment),
  - the scoop under the scuttle panel grille (see **Scoop under scuttle panel grille: Removal - Refitting**) (56A, Exterior equipment).
  - the front right-hand wheel (see **Wheel: Removal - Refitting**) (35A, Wheels and tyres),
  - the front section of the front right-hand wheel arch liner (see **Front wheel arch liner: Removal - Refitting**) (55A, Exterior protection).
- ❑ Drain the manual gearbox (see **Manual gearbox oil: Draining - Refilling**) (21A, Manual gearbox).
- ❑ Remove:
  - the front right-hand wheel driveshaft (see **Front right-hand wheel driveshaft: Removal - Refitting**) (29A, Driveshafts),
  - the right-hand differential output seal (see **Differential output seal: Removal - Refitting**) (21A, Manual gearbox),
  - the lower engine tie-bar (see **19D**, **Engine mounting**, **Lower engine tie-bar: Removal - Refitting**, page **19D-33**) ,
  - the exhaust connecting hose (see **19B**, **Exhaust**, **Connecting hose: Removal - Refitting**, page **19B-60**) ,

F4R

- the catalytic converter (see **19B**, **Exhaust**, **Catalytic converter: Removal - Refitting**, page **19B-17**) .

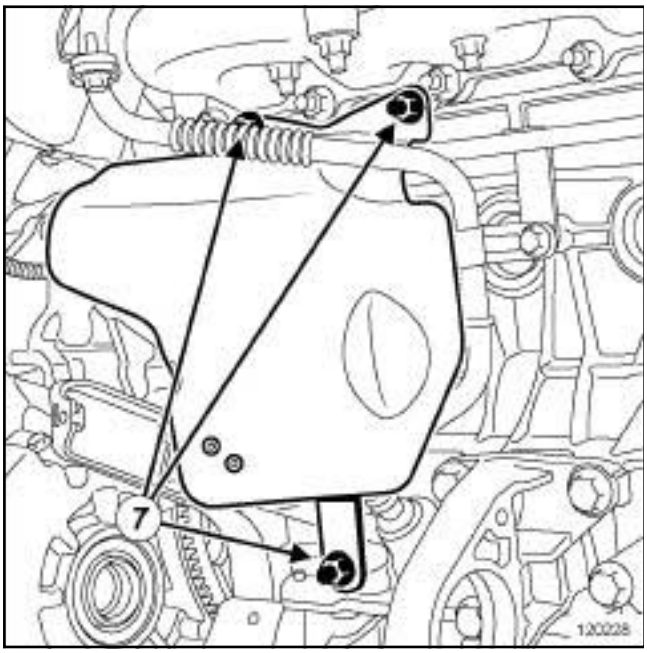

120228

❑ Remove:

- the nuts (**7**) from the starter heat shield,
- the starter heat shield.

II - OPERATION FOR REMOVAL OF PART CONCERNED

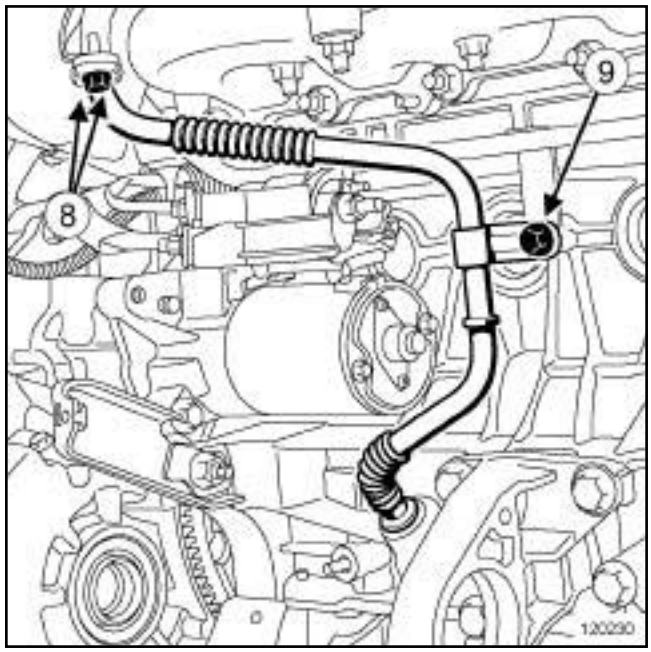

120230

❑ Remove:

- the turbocharger oil return pipe bolts (**8**) on the turbocharger,
- the bolt (**9**) from the turbocharger oil return pipe on the cylinder block,
- the turbocharger oil return pipe,
- the turbocharger oil return pipe gaskets.

REFITTING THE TURBOCHARGER OIL RETURN PIPE

I - REFITTING PREPARATION OPERATION

❑ **parts always to be replaced: turbocharger oil pipe seal (10,09,03,05)**.

❑ **parts always to be replaced: Turbocharger oil return pipe (10,09,03,02)**.

❑ Use **SURFACE CLEANER** (see **Vehicle: Parts and ingredients for the repairwork**) (04B, Consumables - Products) to clean and degrease:

- the turbocharger oil return pipe joint face if it is to be reused,
- the intermediate oil return pipe joint face.

❑ Refit the new seals onto the turbocharger oil return pipe.

❑ Lubricate the O-rings of the turbocharger oil return pipe.

F4R

II - REFITTING OPERATION FOR PART CONCERNED

❏ Fit the turbocharger oil return pipe, first positioning it in the cylinder block.

❏ Refit the turbocharger oil return pipe bolts on the turbocharger.

❏ Torque tighten the **turbocharger oil return pipe bolts on the turbocharger (8 Nm)**.

❏ Refit the turbocharger oil return pipe bolt on the cylinder block.

❏ Tighten to torque the **turbocharger oil return pipe bolt on the cylinder block (25 Nm)**.

III - FINAL OPERATION

❏ Refit:

- the heat shield to the starter,
- the catalytic converter (see **19B**, **Exhaust**, **Catalytic converter: Removal - Refitting**, page **19B-17**) ,
- the exhaust connecting hose (see **19B**, **Exhaust**, **Connecting hose: Removal - Refitting**, page **19B-60**) ,
- the lower engine tie-bar (see **19D**, **Engine mounting**, **Lower engine tie-bar: Removal - Refitting**, page **19D-33**) ,
- a new right-hand differential output seal (see **Differential output seal: Removal - Refitting**) (21A, Manual gearbox),
- the front right-hand wheel driveshaft (see **Front right-hand wheel driveshaft: Removal - Refitting**) (29A, Driveshafts).

❏ Fill the manual gearbox (see **Manual gearbox oil: Draining - Refilling**) (21A, Manual gearbox).

❏ Refit:

- the front section of the front right-hand wheel arch liner (see **Front wheel arch liner: Removal - Refitting**) (55A, Exterior protection),
- the front right-hand wheel (see **Wheel: Removal - Refitting**) (35A, Wheels and tyres),
- the scoop under the scuttle panel grille (see **Scoop under scuttle panel grille: Removal - Refitting**) (56A, Exterior equipment),
- the scuttle panel grille (see **Scuttle panel grille: Removal - Refitting**) (56A, Exterior equipment),
- the windscreen wiper arms (see **Windscreen wiper arm: Removal - Refitting**) (85A, Wiping - Washing),
- the engine undertray,
- the engine cover.

❏ Connect the battery (see **Battery : Removal - Refitting**) (80A, Battery).

F4R or F9Q or K9K

REMOVAL

I - REMOVAL PREPARATION OPERATION

❑ Position the vehicle on a two-post lift (see **Vehicle: Towing and lifting**) (02A, Lifting equipment).

❑ Remove:

- the front wheels (see **Wheel: Removal - Refitting**) (35A, Wheels and tyres),
- the engine undertray bolts,
- the engine undertray,
- the front section of the front wheel arch liners (see **Front wheel arch liner: Removal - Refitting**) (55A, Exterior protection),
- the front bumper (see **Front bumper: Removal - Refitting**) (55A, Exterior protection).

K9K

❑ Remove:

- the right-hand headlight (see **Front headlight: Removal - Refitting**) (80B, Headlights),
- the front right-hand support of the front bumper (see **Front bumper support: Removal - Refitting**) (42A, Front upper structure).

II - OPERATION FOR REMOVAL OF PART CONCERNED

❑ Remove:

- the upper air deflector,
- the side air deflectors.

K9K

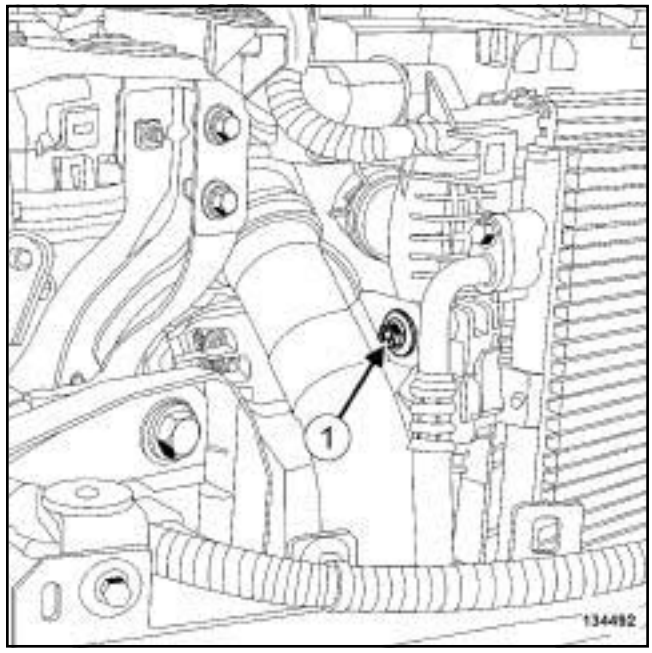

134492

❑ Remove the bolt (**1**) on the intercooler air inlet pipe.

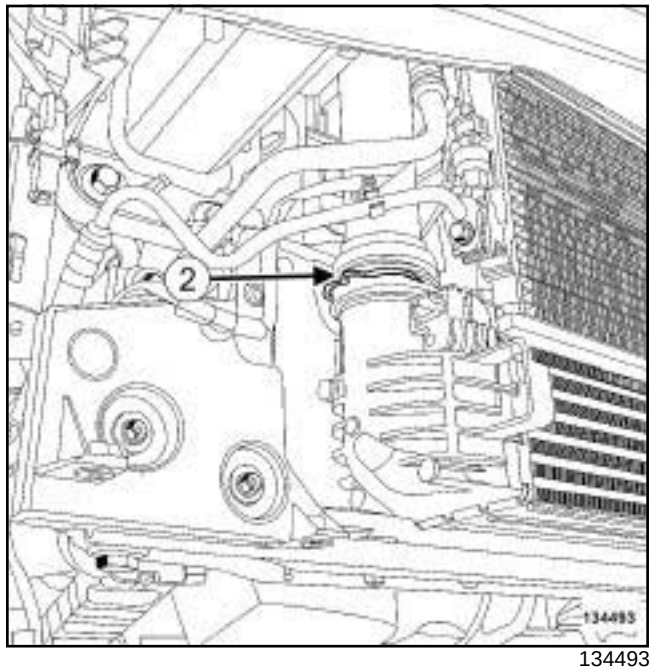

134493

❑ Remove:

- the clip (**2**) from the intercooler air inlet pipe,
- the air pipe at the intercooler inlet.

F4R or F9Q or K9K

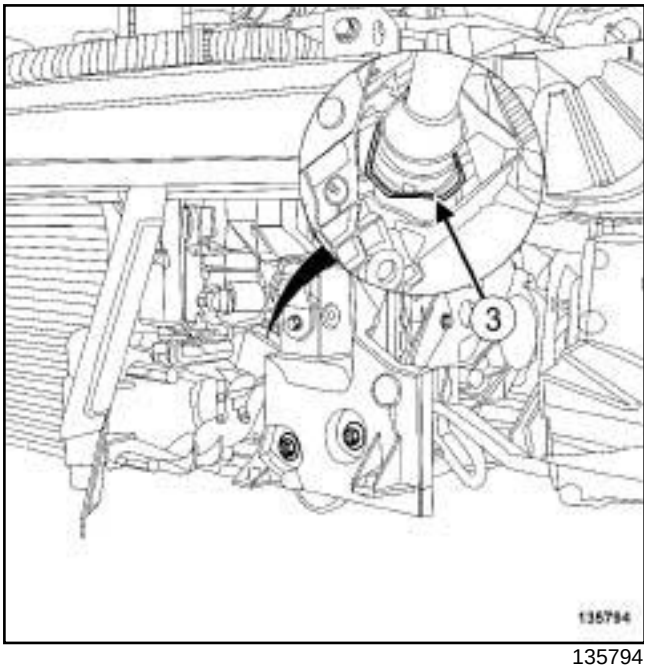

135794

❑ Remove:

- the clip (**3**) on the intercooler air outlet pipe,
- the air pipe at the intercooler outlet.

F4R or F9Q

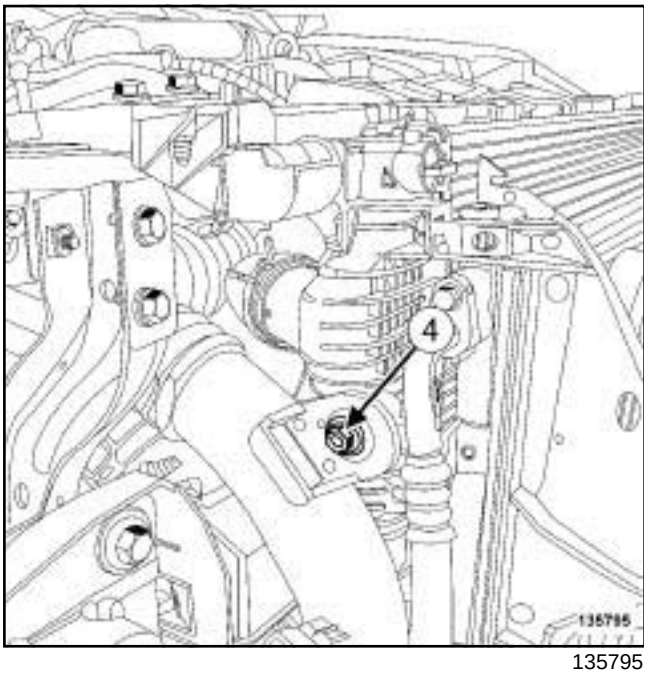

135795

❑ Remove the bolt (**4**) from the intercooler air outlet pipe.

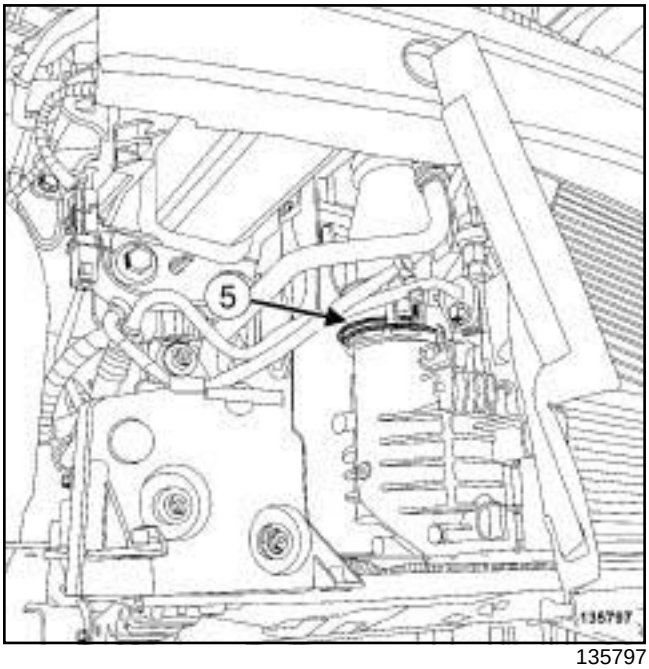

135797

❑ Remove:

- the clip (**5**) on the intercooler air outlet pipe,
- the air pipe at the intercooler outlet.

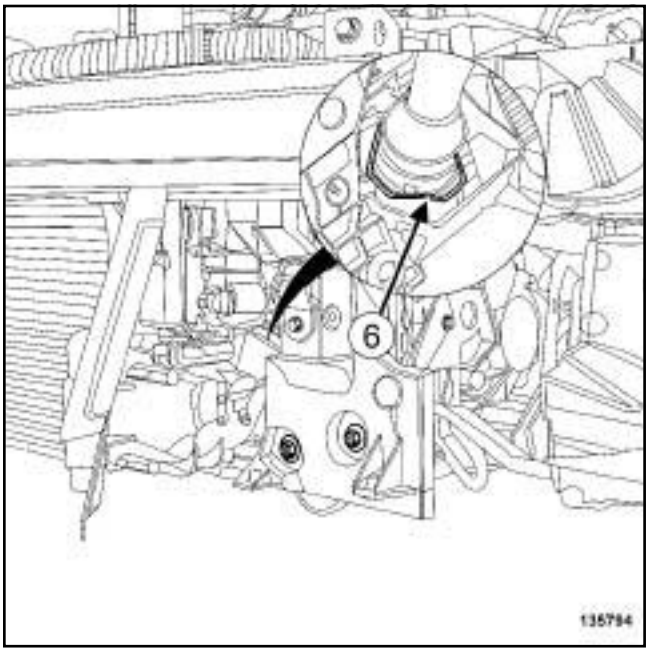

135794

❑ Remove:

- the clip (**6**) from the intercooler air inlet pipe,
- the air pipe at the intercooler inlet.

F4R or F9Q or K9K

❑ Remove:

- the intercooler air inlet pipe seal,
- the intercooler air outlet pipe seal.

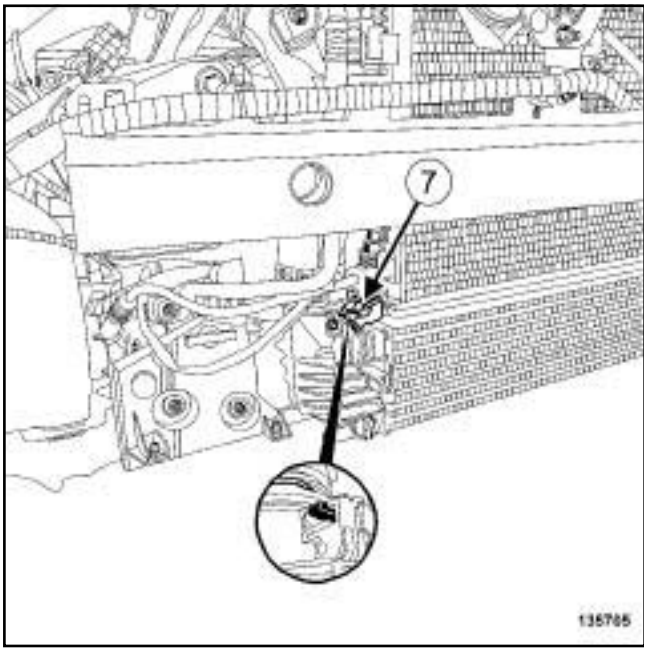

135705

❑ Press on the intercooler clip (**7**) .

❑ Unclip the intercooler in the direction of the arrow.

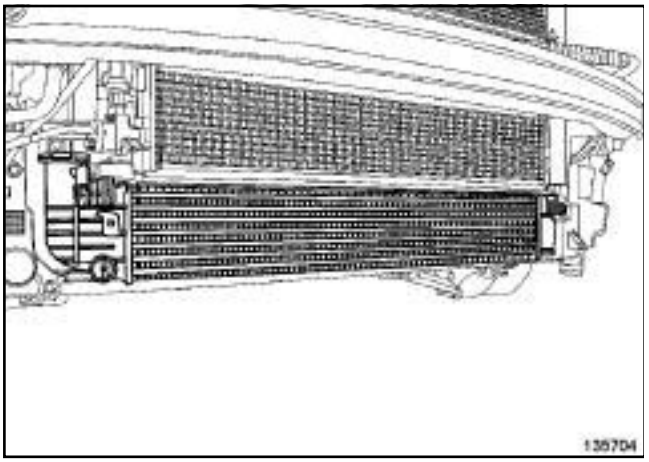

135704

❑ Remove the intercooler.

REFITTING

I - REFITTING PREPARATION OPERATION

❑ **parts always to be replaced: turbocharger air cooler air inlet pipe seal (10,09,04,04)**.

❑ **parts always to be replaced: turbocharger air cooler air outlet pipe seal (10,09,04,05)**.

II - REFITTING OPERATION FOR PART CONCERNED

❑ Refit:

- the intercooler,
- a new seal to the intercooler air outlet pipe,
- a new seal to the intercooler air inlet pipe.

❑ Connect:

- the intercooler air outlet pipe,
- the air pipe at the intercooler inlet.

❑ Clip on the intercooler air pipe clips.

> Note:
>
> Check that the air pipes are correctly clipped onto the intercooler.

F4R or F9Q

❑ Refit the bolt to the intercooler air outlet pipe.

K9K

❑ Refit the bolt on the intercooler air inlet pipe.

❑ Refit:

- the side deflectors,
- the upper deflector.

III - FINAL OPERATION

K9K

❑ Refit:

- the front right-hand support of the front bumper (see **Front bumper support: Removal - Refitting**) (42A, Front upper structure),
- the right-hand headlight (see **Front headlight: Removal - Refitting**) (80B, Headlights).

❑ Refit:

- the front bumper (see **Front bumper: Removal - Refitting**) (55A, Exterior protection),

F4R or F9Q or K9K

- the front section of the front wheel arch liners (see **Front wheel arch liner: Removal - Refitting**) (55A, Exterior protection),
- the engine undertray,
- the front wheels (see **Wheel: Removal - Refitting**) (35A, Wheels and tyres).

K9K

Note:

This procedure describes removing and refitting the turbocharger air outlet pipe and the intercooler air inlet pipe.

REMOVING THE TURBOCHARGER AIR OUTLET PIPE

I - REMOVAL PREPARATION OPERATION

❑ Remove the front engine cover.

II - OPERATION FOR REMOVAL OF PART CONCERNED

K9K, and 832

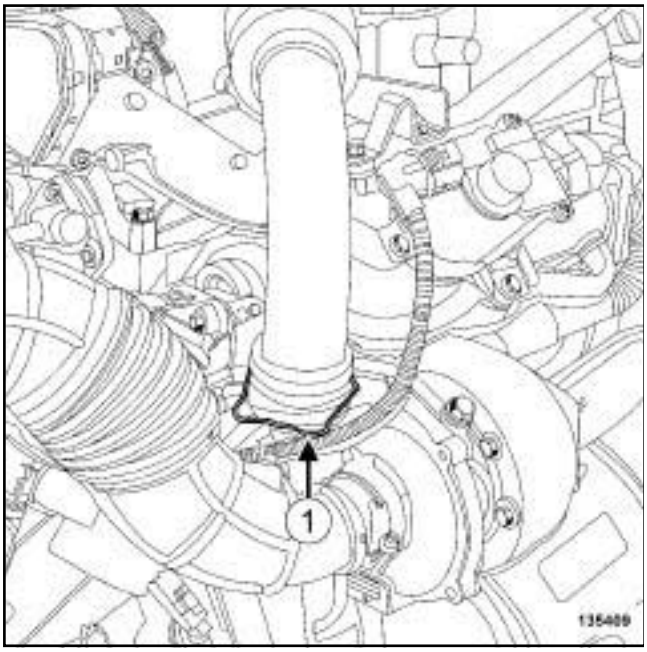

135409

❑ Pull the clip (**1**) for the turbocharger air outlet pipe from the turbocharger.

K9K, and 830

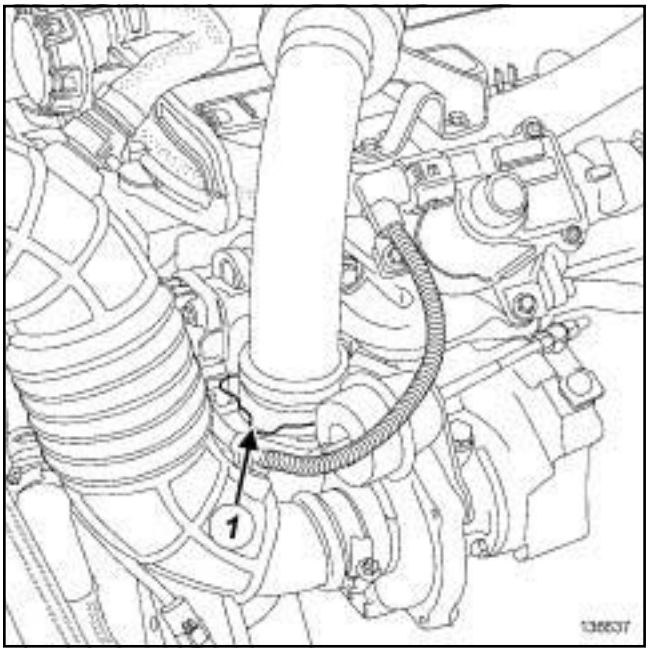

136637

❑ Pull the clip (**1**) for the turbocharger air outlet pipe from the turbocharger.

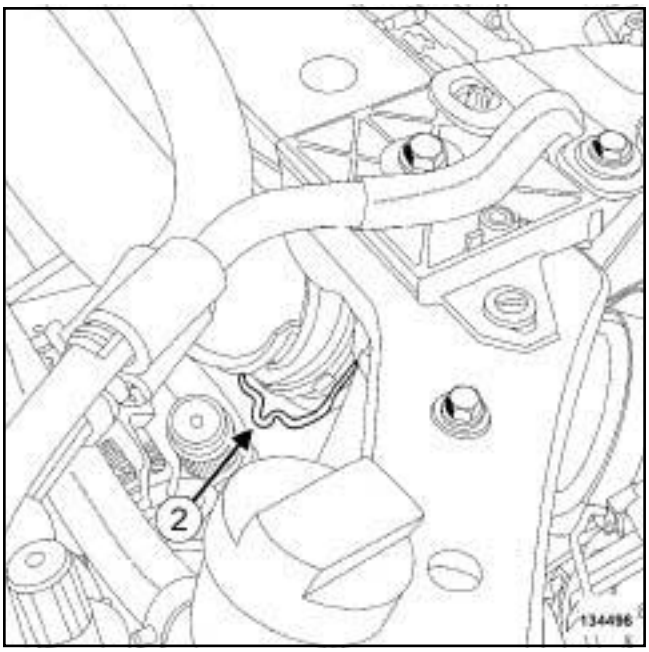

134496

❑ Pull the clip for the intercooler air inlet pipe (**2**) from the turbocharger air outlet pipe.

K9K

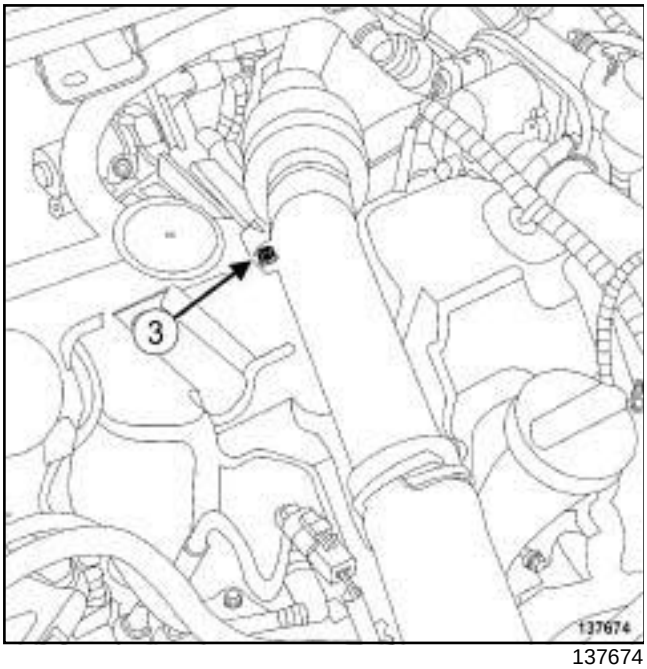

137674

❑ Remove:

- the bolt (**3**) from the turbocharger air outlet pipe,
- the turbocharger air outlet pipe,
- the seals from the turbocharger air outlet pipe.

REFITTING THE TURBOCHARGER AIR OUTLET PIPE

I - REFITTING PREPARATION OPERATION

❑ Always replace the seals for the turbocharger air outlet pipe.

II - REFITTING OPERATION FOR PART CONCERNED

❑ Refit:

- new turbocharger air outlet pipe seals in the turbocharger air outlet pipe,
- the turbocharger outlet air pipe.

❑ Fit the clips onto the turbocharger air outlet pipe.

❑ Clip the turbocharger air outlet pipe onto:

- the air pipe at the intercooler inlet,
- the turbocharger.

❑ Refit the turbocharger air outlet pipe bolt.

III - FINAL OPERATION

❑ Refit the engine cover.

REMOVING THE INTERCOOLER AIR INLET PIPE

I - REMOVAL PREPARATION OPERATION

❑ Remove:

- the engine cover,
- the turbocharger air outlet pipe,
- the front wheels (see **Wheel: Removal - Refitting**) (35A, Wheels and tyres),
- the front section of the front wheel arch liners (see **Front wheel arch liner: Removal - Refitting**) (55A, Exterior protection),
- the engine undertray bolts,
- the engine undertray,
- the front bumper (see **Front bumper: Removal - Refitting**) (55A, Exterior protection),
- the right-hand headlight (see **Front headlight: Removal - Refitting**) (80B, Headlights),
- the front right-hand bumper support (see **Front bumper support: Removal - Refitting**) (42A, Front upper structure).

II - OPERATION FOR REMOVAL OF PART CONCERNED

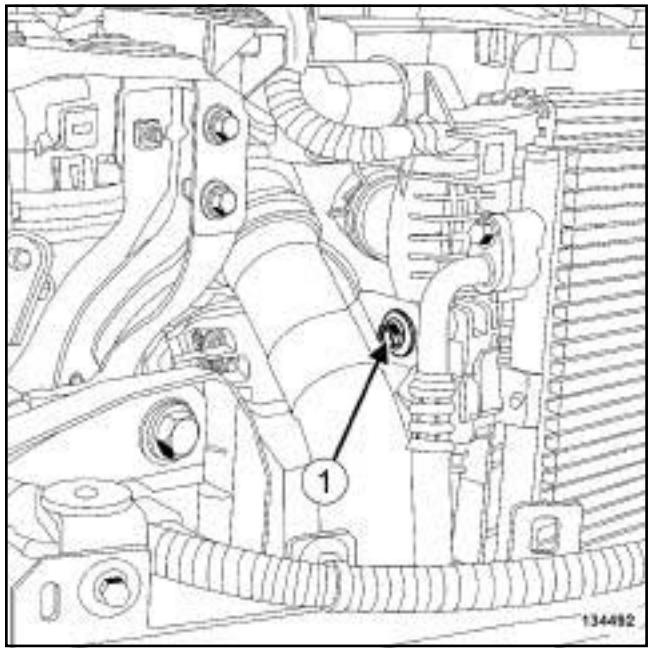

134492

❑ Pull the intercooler clip (**1**) from the intercooler air inlet pipe.

K9K

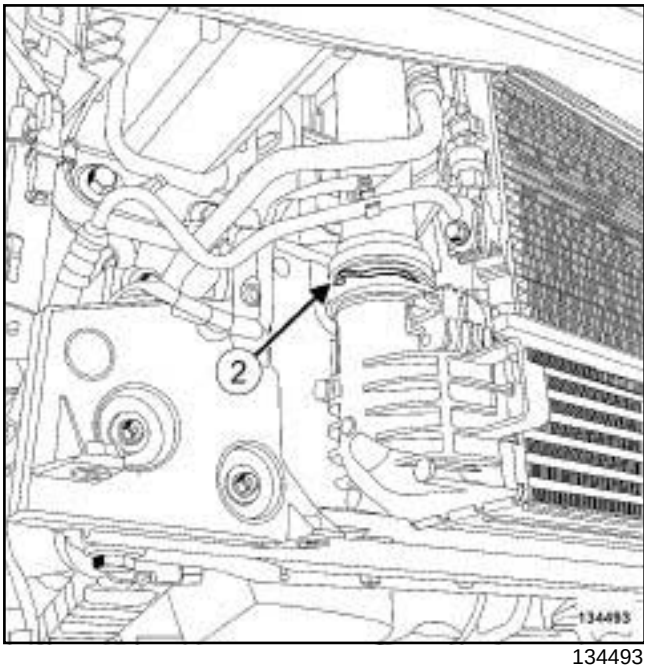

134493

❑ Remove:

- the intercooler air inlet pipe bolt (**2**) from the cooling radiator,
- the air pipe at the intercooler inlet,
- the intercooler air inlet pipe seal.

REFITTING THE INTERCOOLER AIR INLET PIPE

I - REFITTING PREPARATION OPERATION

❑ **parts always to be replaced: turbocharger air cooler air inlet pipe seal (10,09,04,04)**.

II - REFITTING OPERATION FOR PART CONCERNED

❑ Refit:

- a new seal to the intercooler air inlet pipe,
- the air pipe at the intercooler inlet.

❑ Fit the clip on the intercooler air inlet pipe.

❑ Clip the intercooler air inlet pipe onto the intercooler.

❑ Refit the bolt for the intercooler air inlet pipe onto the cooling radiator.

III - FINAL OPERATION

❑ Refit:

- the front right-hand bumper support (see **Front bumper support: Removal - Refitting**) (42A, Front upper structure),
- the right-hand headlight (see **Front headlight: Removal - Refitting**) (80B, Headlights),
- the front bumper (see **Front bumper: Removal - Refitting**) (55A, Exterior protection),
- the engine undertray,
- the front section of the front wheel arch liners (see **Front wheel arch liner: Removal - Refitting**) (55A, Exterior protection),
- the front wheels (see **Wheel: Removal - Refitting**) (35A, Wheels and tyres),
- the intercooler air outlet pipe,
- the engine cover.

F9Q

Tightening torques ▽	
turbocharger air inlet pipe bolts	**8 N.m**

REMOVAL

I - REMOVAL PREPARATION OPERATION

❑ Position the vehicle on a two-post lift (see **Vehicle: Towing and lifting**) (02A, Lifting equipment).

❑ Remove:

- the engine cover,
- the engine undertray bolts,
- the engine undertray,
- the windscreen wiper arms (see **Windscreen wiper arm: Removal - Refitting**) (85A, Wiping - Washing),
- the scuttle panel grille (see **Scuttle panel grille: Removal - Refitting**) (56A, Exterior equipment),
- the scoop under the scuttle panel grille (see **Scoop under scuttle panel grille: Removal - Refitting**) (56A, Exterior equipment),
- the battery (see **Battery: Removal - Refitting**) (80A, Battery),
- the battery tray (see **Battery tray: Removal - Refitting**) (80A, Battery).

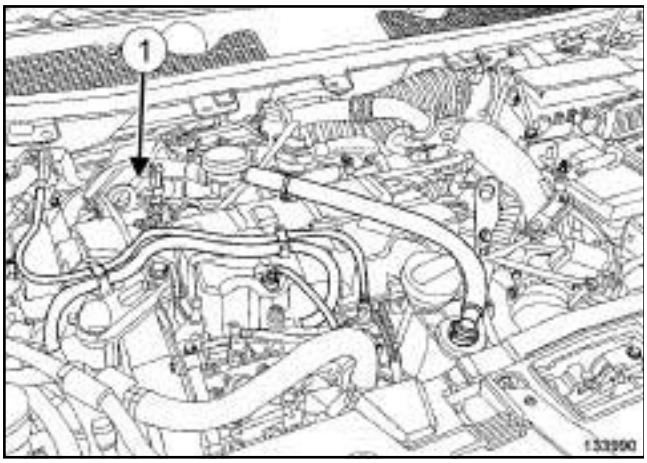

133990

❑ Disconnect the oil vapour rebreathing pipe (**1**) from the intermediate air pipe between the air filter unit and the turbocharger.

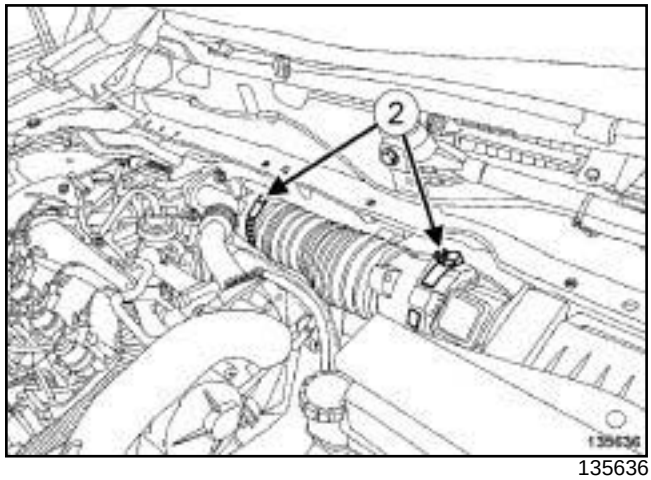

135636

❑ Undo the clips (**2**) for the air filter unit air outlet pipe.

❑ Remove the air outlet pipe from the air filter box.

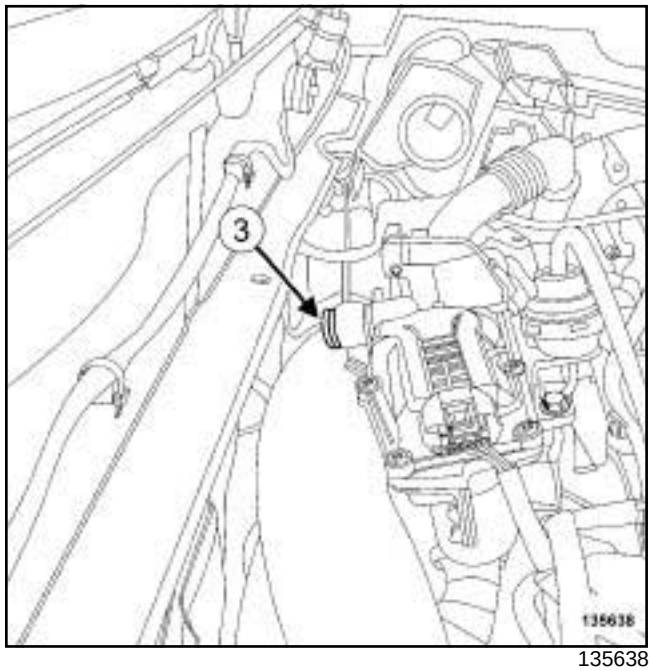

135638

❑ Remove the bolt (**3**) from the intermediate air pipe between the air filter unit and the turbocharger on the exhaust gas recirculation assembly.

F9Q

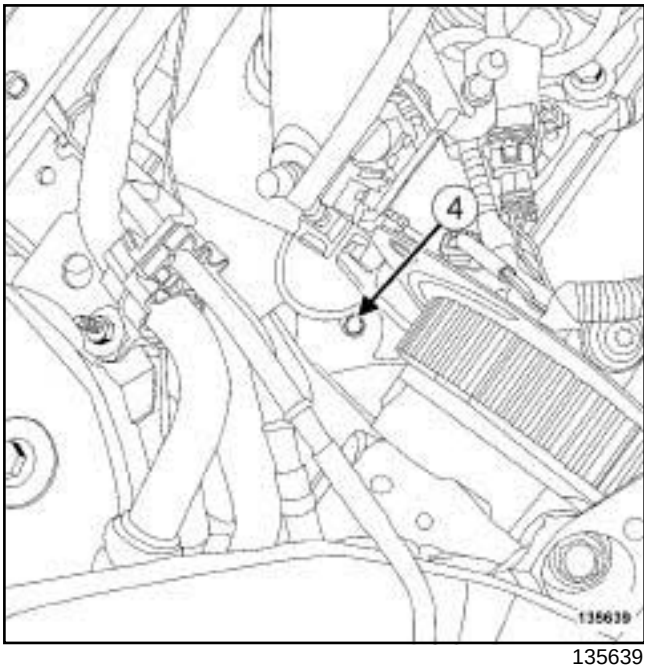

135639

❑ Loosen the bolt (**4**) of the intermediate air pipe between the air filter unit and the turbocharger on the turbocharger air inlet pipe.

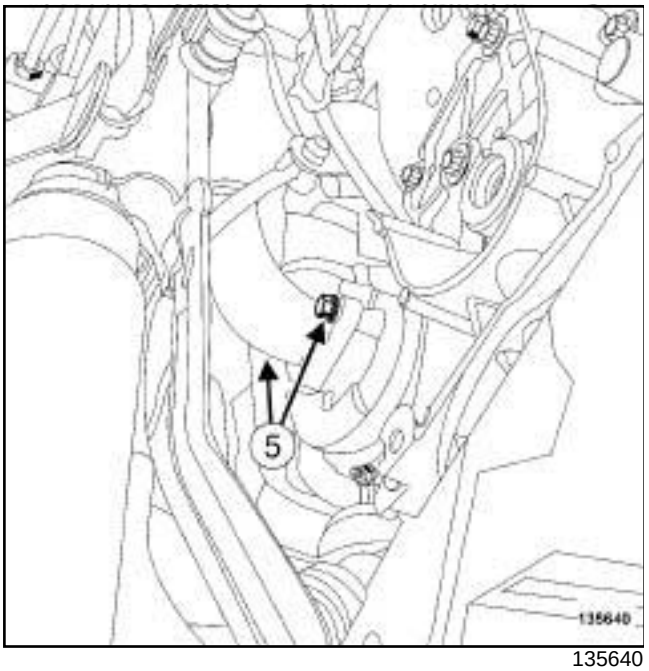

135640

❑ Remove the bolts (**5**) from the turbocharger air inlet pipe.

❑ Disconnect the intermediate air pipe between the air filter unit and the turbocharger from the turbocharger air inlet pipe by pivoting it.

❑ Remove:

- the intermediate air pipe between the air filter unit and the turbocharger,
- the turbocharger air inlet pipe.

II - OPERATION FOR REMOVAL OF PART CONCERNED

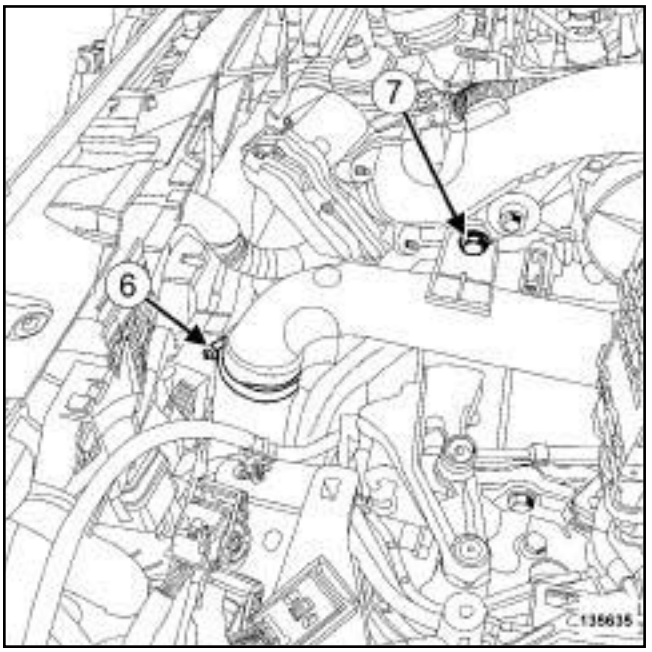

135635

❑ Loosen the clip (**6**) on the intercooler air inlet pipe.

❑ Disconnect the intercooler air inlet pipe.

❑ Remove the bolt (**7**) from the intercooler air inlet pipe on the pipe at the inlet of the distributor.

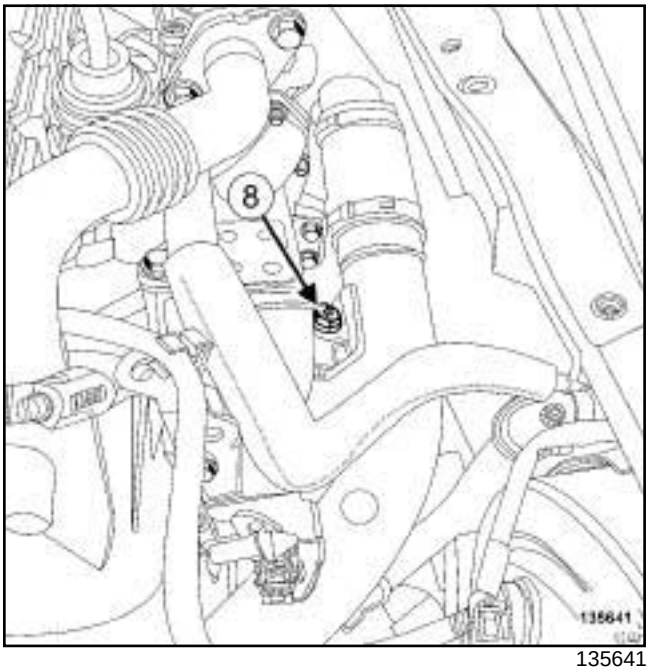

135641

❑ Remove the bolt (**8**) from the intercooler air inlet pipe on the exhaust gas recirculation assembly.

F9Q

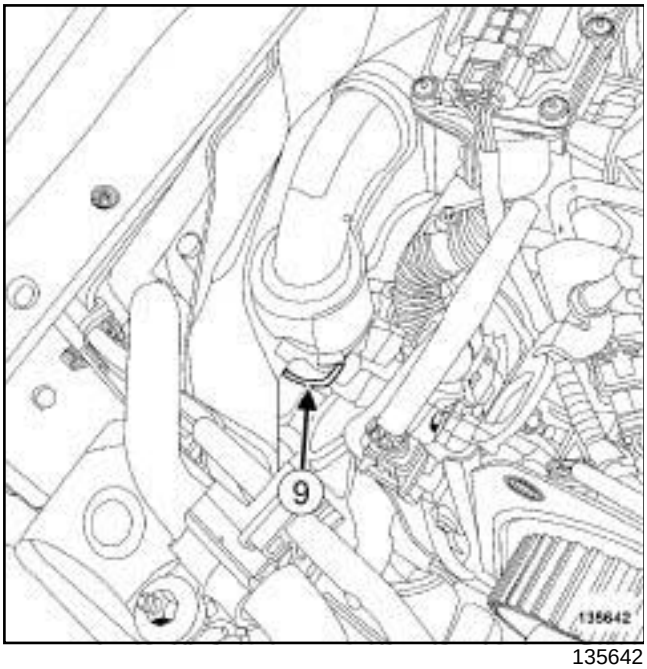

135642

❑ Pull the clip (**9**) from the intercooler inlet air pipe.

❑ Disconnect the intercooler air inlet pipe.

❑ Remove the air pipe at the intercooler inlet.

REFITTING

I - REFITTING PREPARATION OPERATION

❑ Always replace:

- the intercooler air inlet pipe seal,
- the seal between the turbocharger air inlet pipe and the intermediate pipe between the air filter unit and the turbocharger.

❑ Push the intercooler air inlet pipe clip back on.

II - REFITTING OPERATION FOR PART CONCERNED

❑ Fit the intercooler air inlet pipe equipped with a new seal.

❑ Clip the intercooler air inlet pipe on the turbocharger.

❑ Refit:

- the bolt for the intercooler air inlet pipe on the exhaust gas recirculation assembly,
- the bolt for the intercooler air inlet pipe on the pipe at the inlet of the distributor.

❑ Connect the intercooler air inlet pipe.

❑ Fasten the clip on the intercooler air inlet pipe.

III - FINAL OPERATION

❑ Fit:

- the turbocharger air inlet pipe equipped with a new seal,
- the intermediate air pipe between the air filter unit and the turbocharger.

❑ Lubricate the seal between the turbocharger air inlet pipe and the intermediate air pipe between the air filter unit with engine oil.

❑ Connect the intermediate air pipe between the air filter unit and the turbocharger to the turbocharger air inlet pipe by pivoting it.

❑ Refit the turbocharger air inlet pipe bolts.

❑ Torque tighten the **turbocharger air inlet pipe bolts (8 N.m)**.

❑ Tighten the bolt for the intermediate air pipe between the air filter unit and the turbocharger on the turbocharger air inlet pipe.

❑ Refit the bolt for the intermediate air pipe between the air filter unit and the turbocharger on the exhaust gas recirculation assembly.

❑ Refit the air outlet pipe onto the air filter unit.

❑ Connect the oil vapour rebreathing pipe to the intermediate air pipe between the air filter unit and the turbocharger.

❑ Refit:

- the battery tray (see **Battery tray: Removal - Refitting**) (80A, Battery),
- the battery (see **Battery : Removal - Refitting**) (80A, Battery),
- the scoop under the scuttle panel grille (see **Scoop under scuttle panel grille: Removal - Refitting**) (56A, Exterior equipment),
- the scuttle panel grille (see **Scuttle panel grille: Removal - Refitting**) (56A, Exterior equipment),
- the windscreen wiper arms (see **Windscreen wiper arm: Removal - Refitting**) (85A, Wiping - Washing),
- the engine cover,
- the engine undertray.

F4R

Tightening torques ▽	
intercooler air inlet pipe clip	**6 N.m**

REMOVAL

I - REMOVAL PREPARATION OPERATION

❑ Position the vehicle on a two-post lift (see **Vehicle: Towing and lifting**) (02A, Lifting equipment).

❑ Remove:

- the engine cover,
- the battery cover,
- the petrol injection computer cover,
- the engine undertray bolts,
- the engine undertray,
- the front left-hand wheel (see **Wheel: Removal - Refitting**) (35A, Wheels and tyres),
- the front section of the front left-hand wheel arch liner (see **Front wheel arch liner: Removal - Refitting**) (55A, Exterior protection).

II - OPERATION FOR REMOVAL OF PART CONCERNED

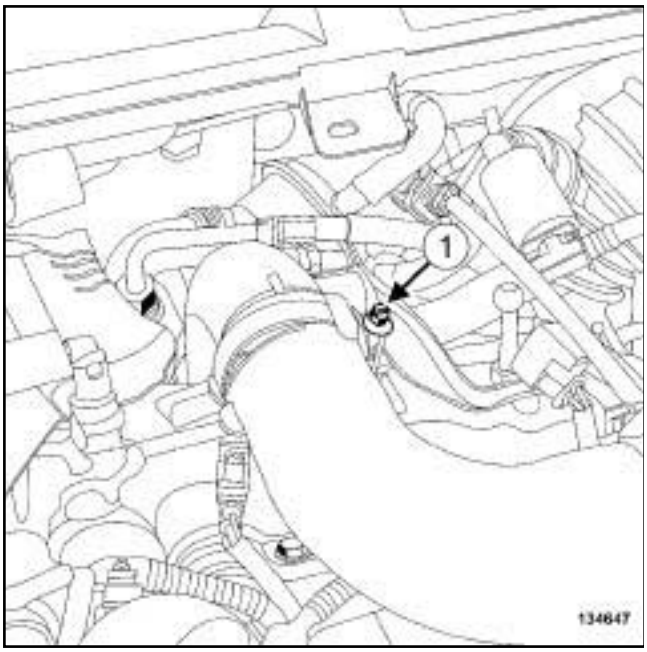

134647

❑ Loosen the clip (**1**) on the intercooler air inlet pipe.

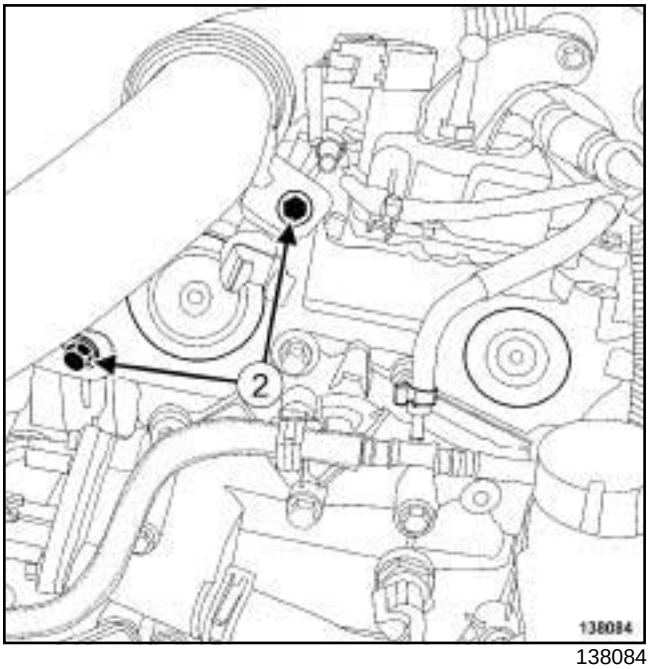

138084

❑ Remove the air pipe bolts (**2**) at the intercooler inlet.

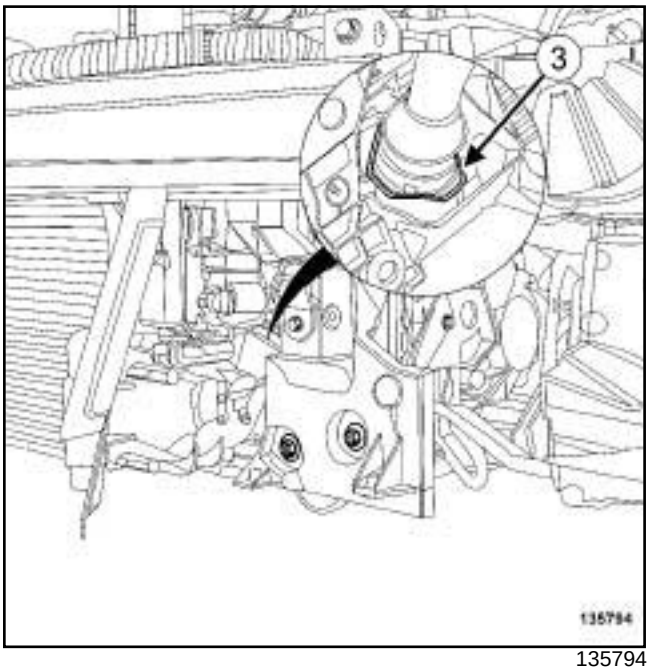

135794

❑ Remove the clip (**3**) for the intercooler air inlet pipe.

❑ Remove:

- the air pipe at the intercooler inlet,
- the intercooler air inlet pipe seal.

F4R

REFITTING

I - REFITTING PREPARATION OPERATION

❑ **parts always to be replaced: turbocharger air cooler air inlet pipe seal (10,09,04,04)**.

II - REFITTING OPERATION FOR PART CONCERNED

❑ Fit the intercooler air inlet pipe equipped with a new seal.

❑ Clip the intercooler air inlet pipe onto the intercooler.

❑ Refit the bolts on the intercooler air inlet pipe.

❑ Connect the intercooler air inlet pipe on the turbocharger.

❑ Torque tighten the **intercooler air inlet pipe clip (6 N.m)**.

III - FINAL OPERATION

❑ Refit:

- the front section of the front left-hand wheel arch liner (see **Front wheel arch liner: Removal - Refitting**) (55A, Exterior protection),
- the front left-hand wheel (see **Wheel: Removal - Refitting**) (35A, Wheels and tyres),
- the engine undertray,
- the petrol injection computer cover,
- the battery cover,
- the engine cover.

F9Q

Tightening torques ▽	
clip of the turbocharger outlet exhaust gas duct (initial torque)	**5 N.m**
bolts on the bracket of the turbocharger outlet exhaust gas duct	**44 N.m**
clip of the turbocharger outlet exhaust gas duct	**20 N.m**

REMOVAL

I - REMOVAL PREPARATION OPERATION

❑ Position the vehicle on a two-post lift (see **Vehicle: Towing and lifting**) (02A, Lifting equipment).

❑ Remove:

- the engine undertray bolts,
- the engine undertray.

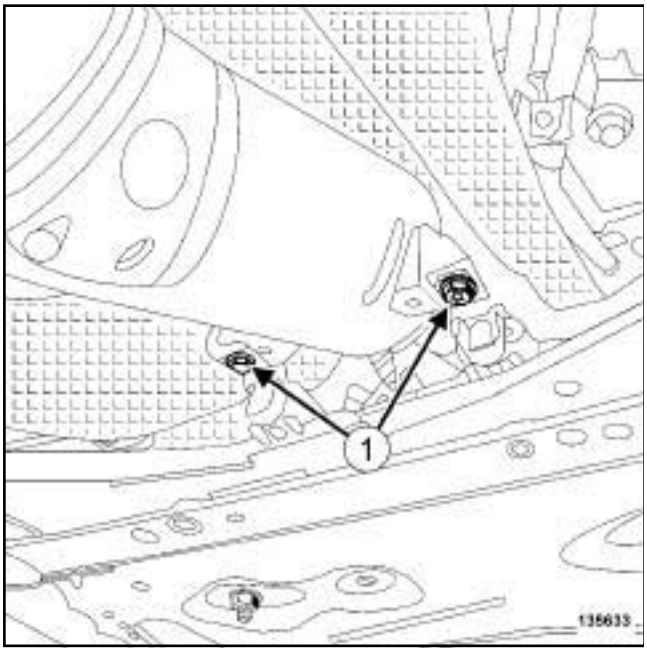

135633

❑ Remove the bolts (**1**) from the catalytic converter.

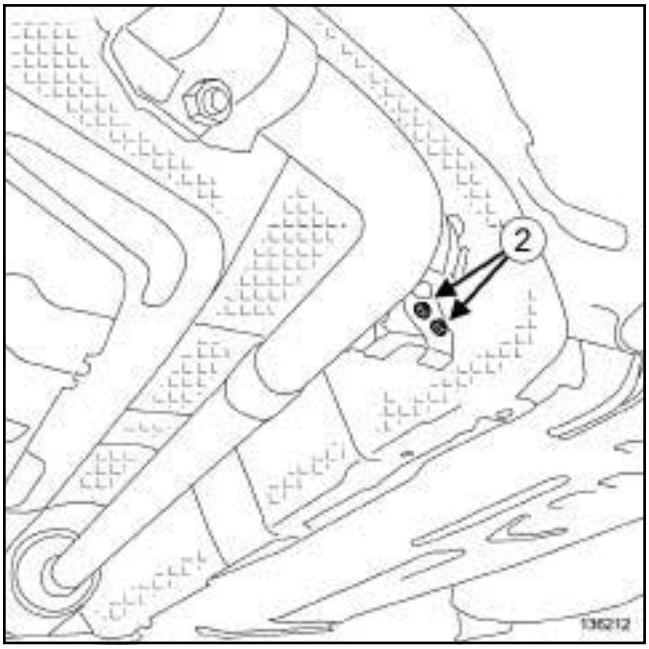

136212

❑ Remove the bolts (**2**) from the intermediate pipe.

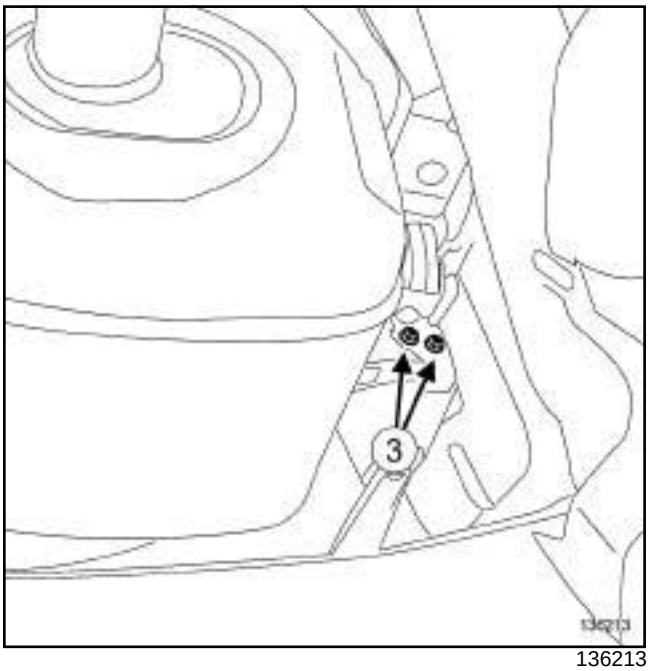

136213

❑ Remove the silencer bolts.

F9Q

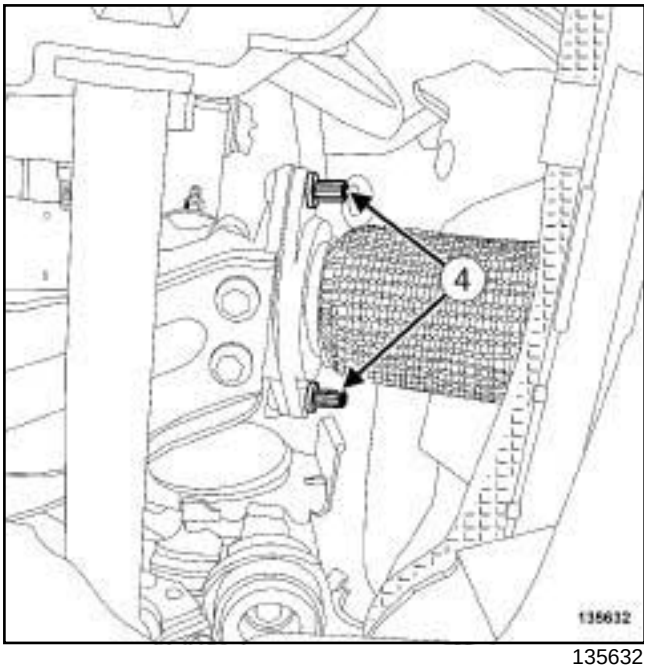

135632

❑ Remove:

- the nuts (**4**) from the exhaust flange,
- the exhaust flange seal.

❑ Move the exhaust pipe to one side.

II - OPERATION FOR REMOVAL OF PART CONCERNED

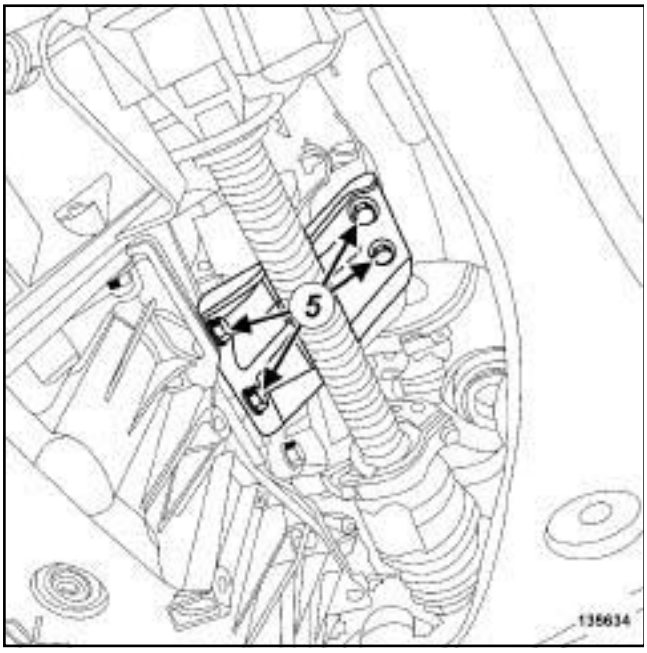

135634

❑ Remove:

- the bolts (**5**) from the bracket of the turbocharger outlet exhaust gas duct,
- the bracket from the turbocharger outlet exhaust gas duct.

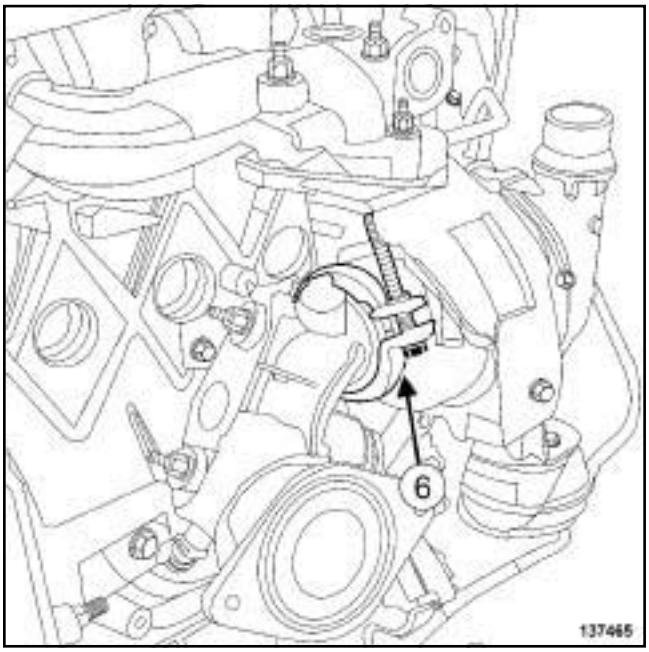

137465

❑ Remove:

- the clip (**6**) from the turbocharger outlet exhaust gas duct,
- the turbocharger outlet exhaust gas duct.

REFITTING

I - REFITTING PREPARATION OPERATION

❑ Always replace:

- the clip of the turbocharger outlet exhaust gas duct,
- the exhaust flange seal.

II - REFITTING OPERATION FOR PART CONCERNED

❑ Fit a new clip on the turbocharger outlet exhaust gas duct.

❑ Fit the turbocharger outlet exhaust gas duct on the turbocharger.

❑ Refit the bracket for the turbocharger outlet exhaust gas duct.

❑ Fit without tightening the bolts on the bracket of the turbocharger outlet exhaust gas duct.

F9Q

❏ Torque tighten the **clip of the turbocharger outlet exhaust gas duct (initial torque) (5 N.m)**.

> Note:
>
> The clip sold as a spare part is different from the original clip.
>
> Only the clip sold as a spare part enables torque tightening under the conditions of tightening in After-Sales.

❏ Tighten to torque:

- the **bolts on the bracket of the turbocharger outlet exhaust gas duct (44 N.m)**,
- the **clip of the turbocharger outlet exhaust gas duct (20 N.m)**.

III - FINAL OPERATION

❏ Refit a new exhaust flange seal.

❏ Fit the exhaust pipe.

❏ Refit:

- the silencer bolts,
- the intermediate pipe bolts,
- the catalytic converter bolts,
- the exhaust flange nuts,
- the engine undertray.

K9K, and 836

Tightening torques ▽	
turbocharger outlet exhaust gas duct bolts	**XX N.m**
exhaust bracket bolts	**XX Nm**
exhaust fuel injector cooler bolts	**XX N.m**
turbocharger outlet exhaust gas duct stay bolts	**XX N.m**

IMPORTANT
Wear protective gloves during the operation.

IMPORTANT
Wear leaktight gloves (Nitrile type) for this operation.

REMOVAL

I - REMOVAL PREPARATION OPERATION

❑ Position the vehicle on a two-post lift (see **Vehicle: Towing and lifting**) (02A, Lifting equipment).

❑ Remove:

- the engine cover,
- the engine undertray bolts,
- the engine undertray.

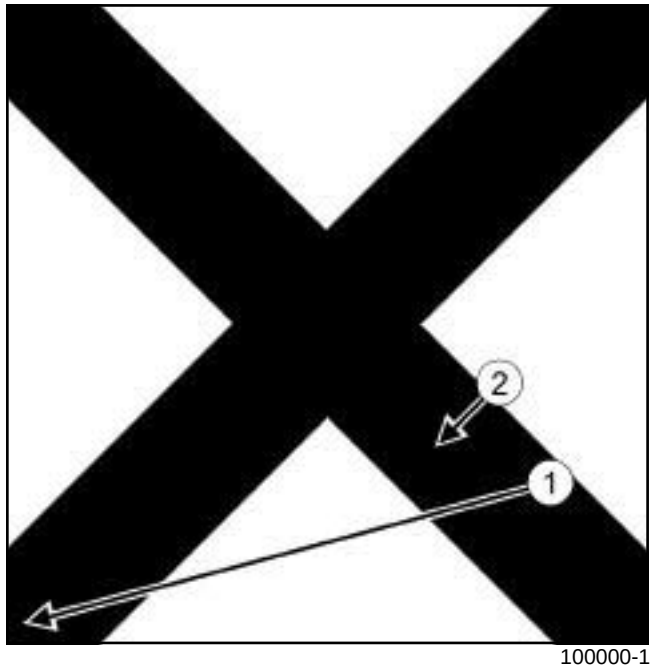

100000-1

❑ Undo:

- the air filter unit air outlet pipe clip (**1**) on the air filter unit,
- the air filter unit air outlet pipe clip (**2**) on the turbocharger air inlet pipe.

❑ Remove the air filter unit air outlet pipe.

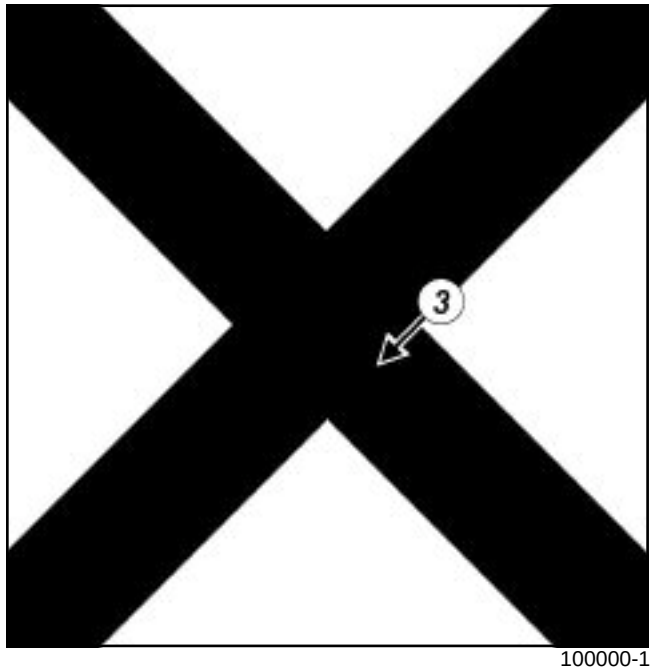

100000-1

❑ Unclip the turbocharging pressure regulation solenoid valve hose from the turbocharger air inlet pipe at (**3**) .

K9K, and 836

100000-1

❑ Remove the turbocharger air inlet pipe bolt from the exhaust gas recirculation assembly (**4**) .

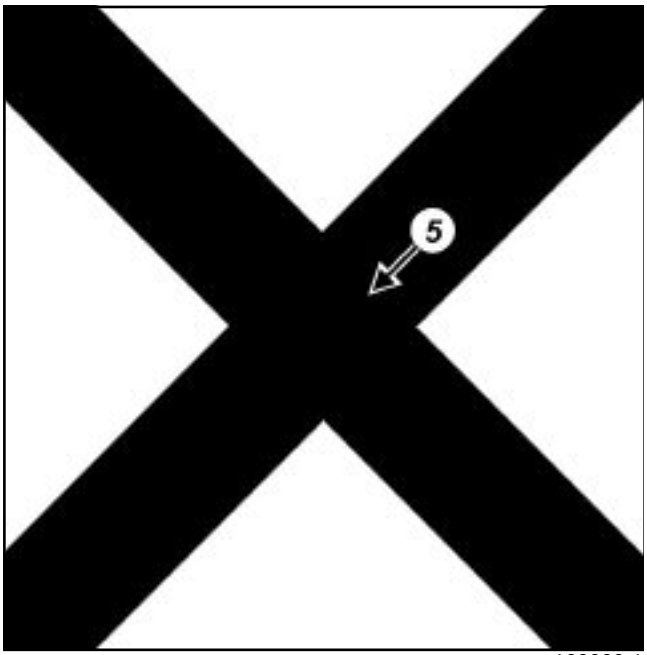

100000-1

❑ Disconnect the oil vapour rebreathing pipe from the rocker cover (**5**) .

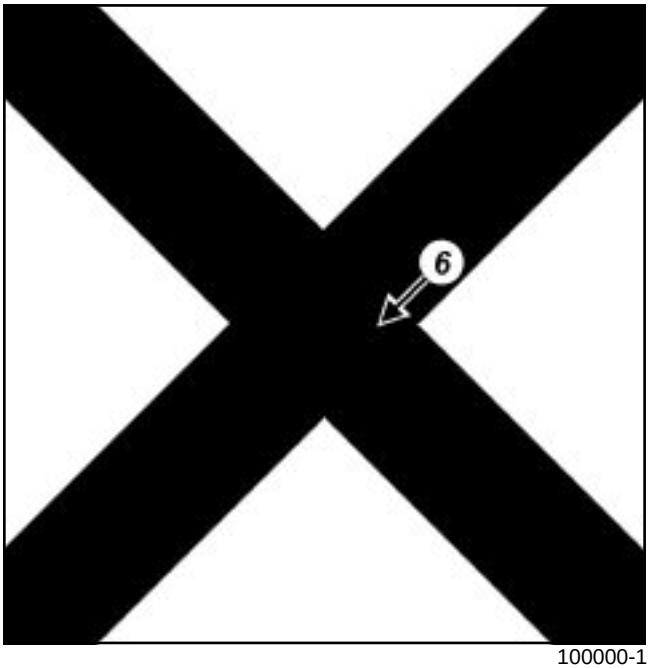

100000-1

❑ Remove:

- the turbocharger air inlet pipe bolts (**6**) from the turbocharger,
- the turbocharger air inlet pipe.

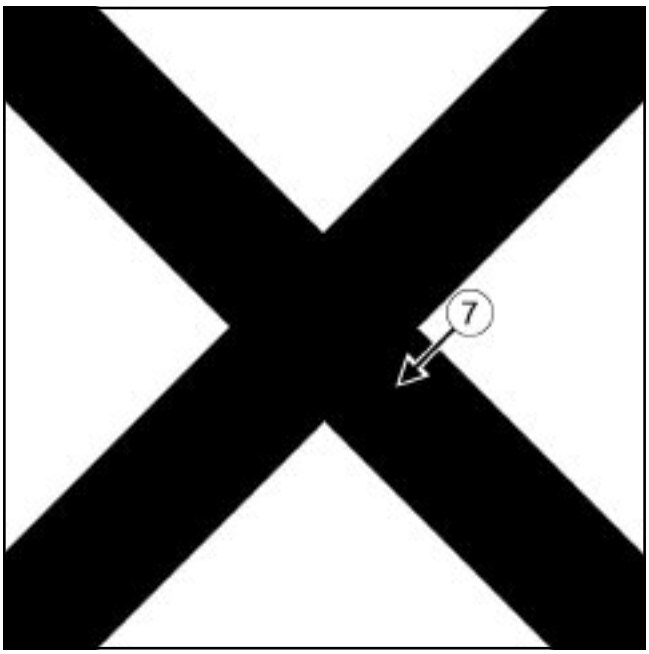

100000-1

❑ Remove:

- the bolts (**7**) from the bracket of the turbocharger outlet exhaust gas duct,
- the bracket from the turbocharger outlet exhaust gas duct.

K9K, and 836

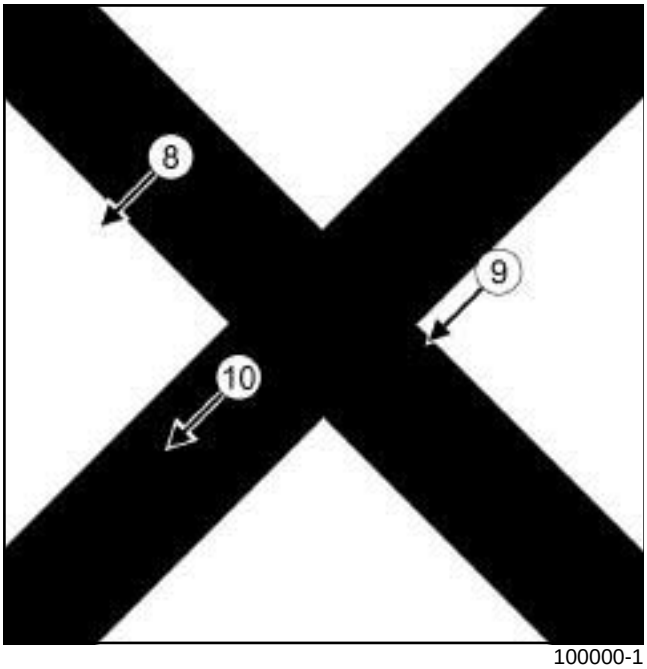

100000-1

❑ Disconnect:

- the exhaust fuel injector connector (**8**) ,
- the exhaust fuel injector fuel supply pipe union from the exhaust fuel injector (**9**) .

❑ Fit blanking plugs on:

- the fuel supply pipe opening of the exhaust fuel injector,
- the exhaust fuel injector opening.

❑ Remove:

- the bolts (**10**) from the exhaust fuel injector cooler,
- the exhaust fuel injector cooler,
- the heat shield from the turbocharger.

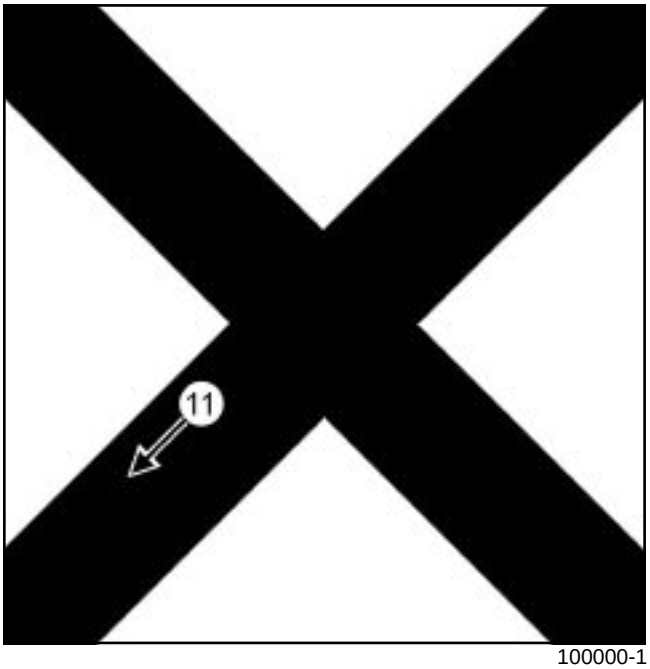

100000-1

❑ Remove the bolts (**11**) from the exhaust bracket.

❑ Move the exhaust pipe to one side.

II - OPERATION FOR REMOVAL OF PART CONCERNED

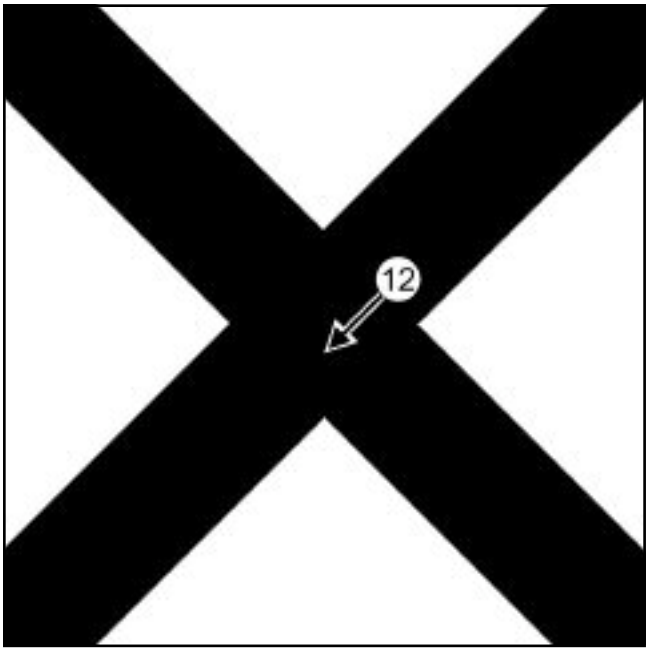

100000-1

❑ Remove:

- the bolts (**12**) from the turbocharger outlet exhaust gas duct,
- the exhaust gases duct at the turbocharger outlet,
- the seal from the turbocharger outlet exhaust gas duct.

K9K, and 836

REFITTING

I - REFITTING PREPARATION OPERATION

- ❑ **parts always to be replaced: Turbocharger heat shield (10,09,01,02)**.
- ❑ Always replace the seal of the turbocharger outlet exhaust gas duct.
- ❑ Always replace the exhaust bracket seal.
- ❑ Use **ABRASIVE PADS** to clean the joint face:
  - on the turbocharger,
  - on the turbocharger outlet exhaust gas duct on the turbocharger side if reusing,
  - on the turbocharger outlet exhaust gas duct on the exhaust pipe side if reusing,
  - on the turbocharger outlet exhaust gas duct on the exhaust fuel injector cooler side if reusing,
  - on the exhaust fuel injector cooler.
- ❑ Use **SURFACE CLEANER** (see **Vehicle: Parts and ingredients for the repairwork**) (04B, Consumables - Products) and **CLEAN CLOTHS** to degrease the joint face:
  - on the turbocharger,
  - on the turbocharger outlet exhaust gas duct on the turbocharger side if reusing,
  - on the turbocharger outlet exhaust gas duct on the exhaust pipe side if reusing,
  - on the turbocharger outlet exhaust gas duct on the exhaust fuel injector cooler side if reusing,
  - on the exhaust fuel injector cooler.

II - REFITTING OPERATION FOR PART CONCERNED

- ❑ Refit the turbocharger outlet exhaust gas duct fitted with a new seal on the turbocharger.
- ❑ Torque tighten the **turbocharger outlet exhaust gas duct bolts (XX N.m)**.

III - FINAL OPERATION

- ❑ Refit:
  - a new exhaust bracket seal,
  - the exhaust bracket bolts.
- ❑ Torque tighten the **exhaust bracket bolts (XX Nm)**.
- ❑ Refit:
  - a new turbocharger heat shield,
  - the exhaust fuel injector cooler.
- ❑ Torque tighten the **exhaust fuel injector cooler bolts (XX N.m)**.
- ❑ Remove the blanking plug:
  - from the exhaust fuel injector opening,
  - from the fuel supply pipe opening of the exhaust fuel injector.
- ❑ Connect:
  - the fuel supply pipe union of the exhaust fuel injector to the exhaust fuel injector,
  - the exhaust fuel injector connector.
- ❑ Refit the bracket for the turbocharger outlet exhaust gas duct.
- ❑ Torque tighten the **turbocharger outlet exhaust gas duct stay bolts (XX N.m)**.
- ❑ Refit the turbocharger air inlet pipe.
- ❑ Connect the oil vapour rebreathing pipe onto the rocker cover.
- ❑ Refit the turbocharger air inlet pipe bolt onto the exhaust gas recirculation assembly.
- ❑ Clip the turbocharging pressure regulation solenoid valve hose onto the turbocharger air inlet pipe.
- ❑ Refit the air outlet pipe onto the air filter unit.
- ❑ Tighten the clip of the air filter unit air outlet pipe on:
  - the turbocharger air inlet pipe,
  - the air filter unit.
- ❑ Refit:
  - the engine undertray,
  - the engine cover.

K9K

Tightening torques ▽	
intercooler air outlet pipe clip on the damper valve	**5.5 N.m**

REMOVAL

I - REMOVAL PREPARATION OPERATION

❏ Remove:

- the engine cover,
- the engine undertray bolts,
- the engine undertray.

II - OPERATION FOR REMOVAL OF PART CONCERNED

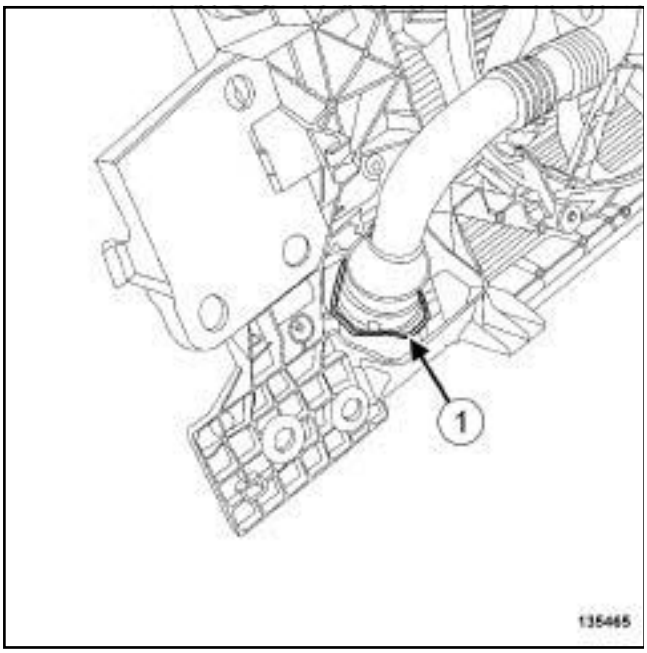

135465

❏ Pull the intercooler clip (**1**) from the intercooler air outlet pipe.

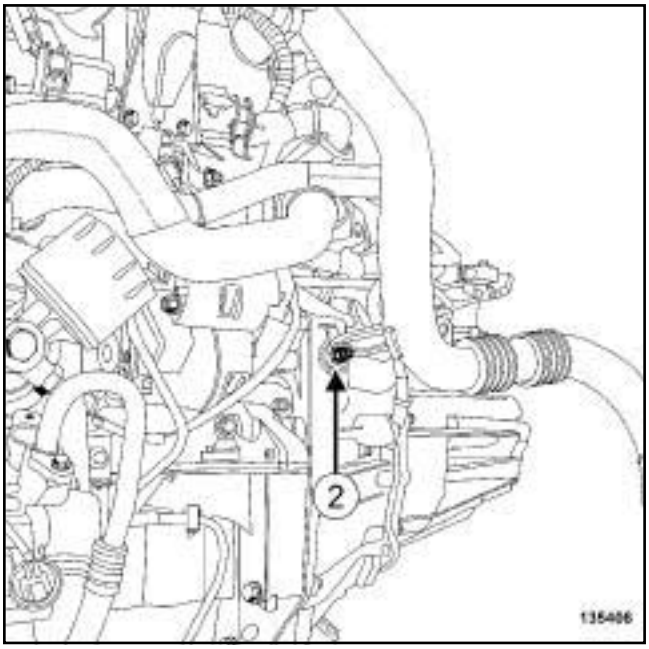

135406

❏ Remove the nut (**2**) from the bracket of the intercooler air outlet pipe.

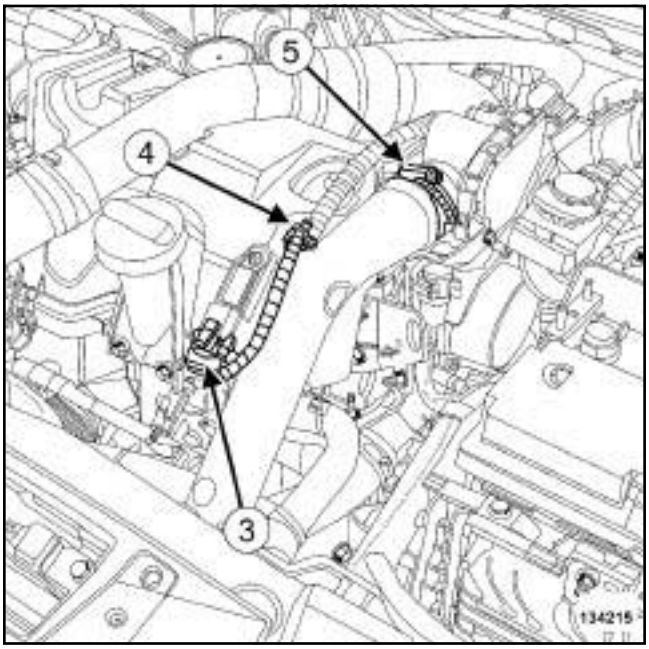

134215

❏ Disconnect the turbocharger pressure sensor connector (**3**) .

❏ Unclip the turbocharging pressure sensor wiring (**4**) from the intercooler air outlet pipe.

❏ Loosen the damper valve clip (**5**) from the intercooler air outlet pipe.

❏ Disconnect the intercooler air outlet pipe from the damper valve.

❏ Remove the intercooler air outlet pipe.

K9K

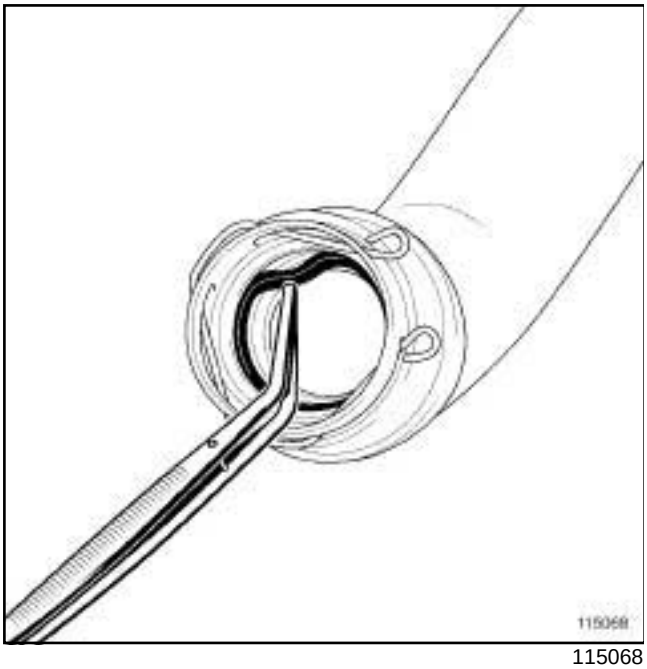

115068

❑ Remove the intercooler air outlet pipe seal at the intercooler end using tweezers.

REFITTING

I - REFITTING PREPARATION OPERATION

❑ **parts always to be replaced: turbocharger air cooler air outlet pipe seal (10,09,04,05)**.

II - REFITTING OPERATION FOR PART CONCERNED

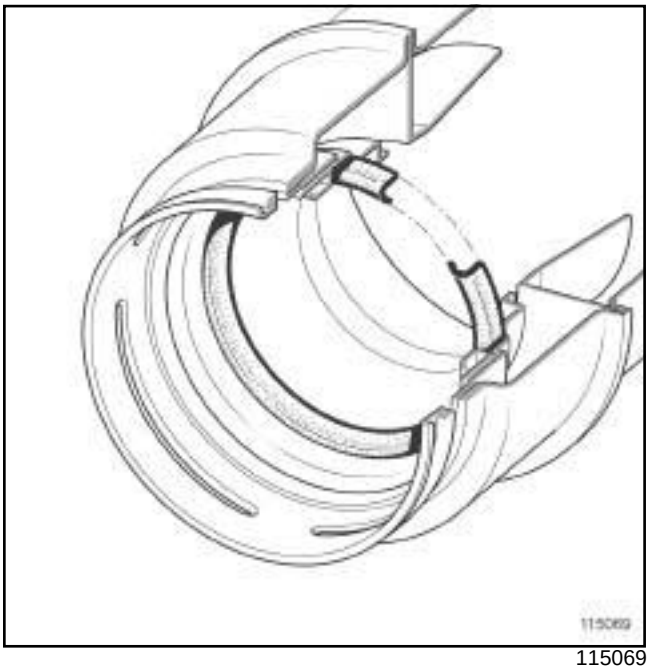

115069

❑

> Note:
>
> Check that the intercooler air outlet pipe seal at the intercooler end is fitted the correct way round.

❑ Refit:

- the new seal for the intercooler air outlet pipe at the intercooler end,
- the intercooler air outlet pipe equipped with a new seal.

❑ Connect the intercooler air outlet pipe on the damper valve.

❑ Torque tighten the **intercooler air outlet pipe clip on the damper valve (5.5 N.m)**.

❑ Clip the turbocharger pressure sensor wiring onto the intercooler air outlet pipe.

❑ Connect the turbocharger pressure sensor connector.

❑ Refit the nut for the bracket of the intercooler air outlet pipe.

❑ Fit the clip for the intercooler air outlet pipe.

❑ Clip the intercooler air outlet pipe onto the intercooler.

K9K

III - FINAL OPERATION

❑ Refit:

- the engine undertray,
- the engine cover.

Intercooler air outlet pipe: Removal - Refitting

F9Q

Tightening torques ▽	
intercooler air outlet pipe clip	**6 Nm**

REMOVAL

I - REMOVAL PREPARATION OPERATION

❑ Remove:

- the engine cover,
- the engine undertray bolts,
- the engine undertray,
- the front wheels (see **Wheel: Removal - Refitting**) (35A, Wheels and tyres),
- the front section of the front wheel arch liners (see **Front wheel arch liner: Removal - Refitting**) (55A, Exterior protection),
- the front bumper (see **Front bumper: Removal - Refitting**) (55A, Exterior protection),
- the audible warning (see **Horn: Removal - Refitting**) (82B, Horn),
- the frontal impact cross member (see **Front impact cross member: Removal - Refitting**) (41A, Front lower structure),
- the cooling radiator air deflectors,
- the headlights (see **Front headlight: Removal - Refitting**) (80B, Headlights),
- the front bumper supports (see **Front bumper support: Removal - Refitting**) (42A, Front upper structure).

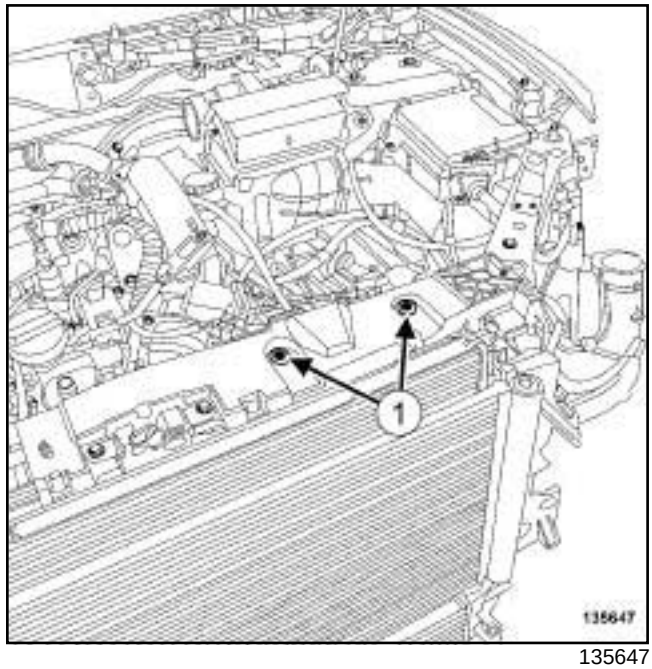

135647

❑ Remove:

- the bolts (**1**) of the engine wiring channel,
- the bonnet catch (see **Bonnet latch: Removal - Refitting**) (52A, Non-side opening element mechanisms).

F9Q

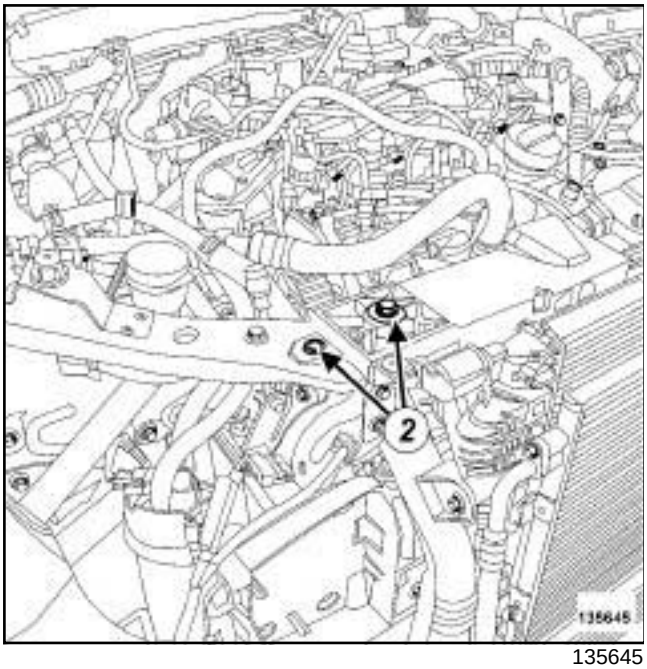

135645

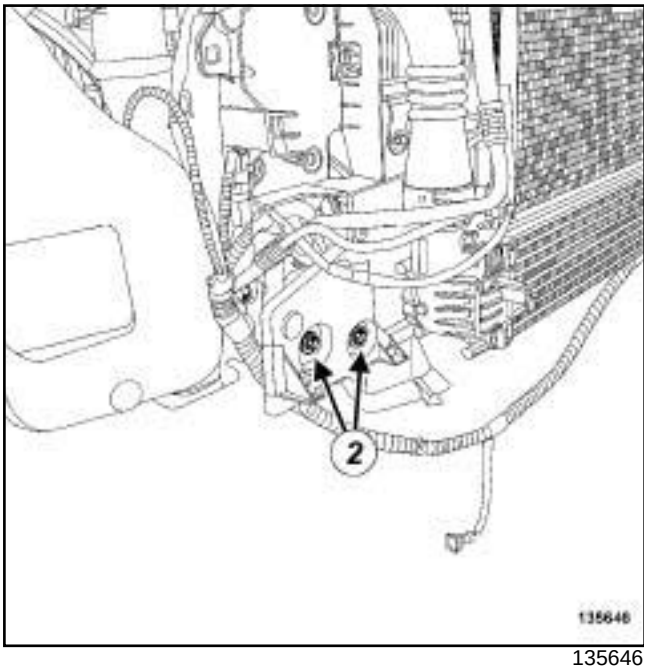

135646

❑ Remove the front end panel bolts (**2**) .

❑ Tilt the front end panel.

II - OPERATION FOR REMOVAL OF PART CONCERNED

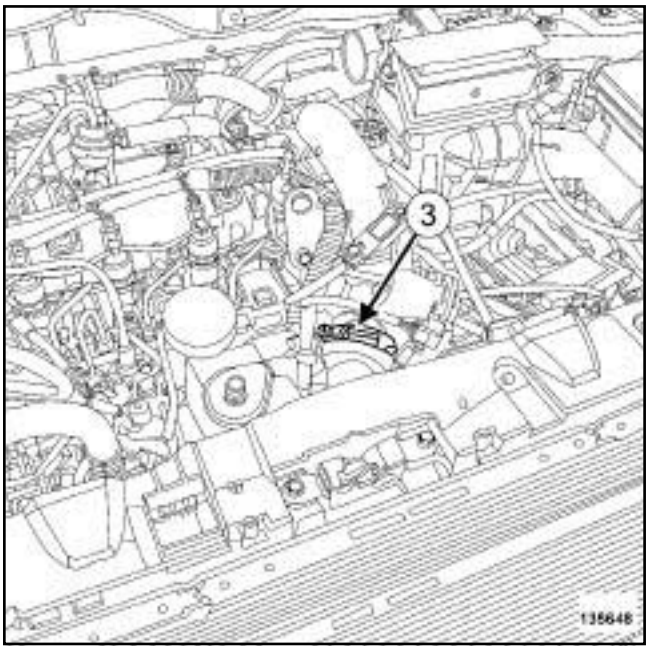

135648

❑ Undo the clip (**3**) of the intercooler air outlet pipe on the damper valve.

❑ Disconnect the intercooler air outlet pipe from the damper valve.

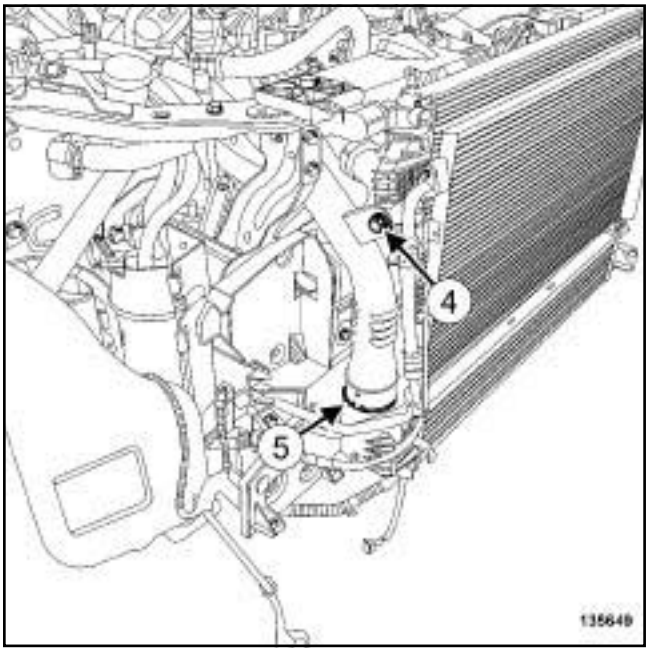

135649

❑ Remove the bolts (**4**) from the intercooler air outlet pipe.

❑ Pull the clip (**5**) from the intercooler air outlet pipe on the intercooler.

❑ Disconnect the intercooler air outlet pipe from the intercooler.

F9Q

❏ Remove the intercooler air outlet pipe.

REFITTING

I - REFITTING PREPARATION OPERATION

❏ **parts always to be replaced: Intercooler air outlet pipe (10,09,04,03)**.

II - REFITTING OPERATION FOR PART CONCERNED

❏ Fit an air pipe to the outlet of the new intercooler.

❏ Clip the intercooler air outlet pipe onto the intercooler.

❏ Refit the bolt for the intercooler air outlet pipe.

❏ Connect the intercooler air outlet pipe on the damper valve.

❏ Torque tighten the **intercooler air outlet pipe clip (6 Nm)**.

III - FINAL OPERATION

❏ Fit the front panel.

❏ Refit:

- the front end panel bolts,
- the bonnet catch (see **Bonnet latch: Removal - Refitting**) (52A, Non-side opening element mechanisms),
- the engine wiring channel bolts,
- the front bumper supports (see **Front bumper support: Removal - Refitting**) (42A, Front upper structure),
- the headlights (see **Front headlight: Removal - Refitting**) (80B, Headlights),
- the cooling radiator air deflectors,
- the frontal impact cross member (see **Front impact cross member: Removal - Refitting**) (41A, Front lower structure),
- the audible warning (see **Horn: Removal - Refitting**) (82B, Horn),
- the front bumper (see **Front bumper: Removal - Refitting**) (55A, Exterior protection),
- the front section of the front wheel arch liners (see **Front wheel arch liner: Removal - Refitting**) (55A, Exterior protection),
- the front wheels (see **Wheel: Removal - Refitting**) (35A, Wheels and tyres),
- the engine undertray,
- the engine cover.

F4R

REMOVAL

I - REMOVAL PREPARATION OPERATION

❑ Position the vehicle on a two-post lift (see **Vehicle: Towing and lifting**) (02A, Lifting equipment).

❑ Remove:

- the engine cover,
- the petrol injection computer cover,
- the engine undertray bolts,
- the engine undertray,
- the front wheels (see **Wheel: Removal - Refitting**) (35A, Wheels and tyres),
- the front section of the front wheel arch liners (see **Front wheel arch liner: Removal - Refitting**) (55A, Exterior protection),
- the front bumper (see **Front bumper: Removal - Refitting**) (55A, Exterior protection),
- the upper air deflector,
- the side air deflectors,
- the headlights (see **Front headlight: Removal - Refitting**) (80B, Headlights),
- the front bumper supports (see **Front bumper support: Removal - Refitting**) (42A, Front upper structure),
- the frontal impact cross member (see **Front impact cross member: Removal - Refitting**) (41A, Front lower structure),
- the bonnet catch (see **Bonnet latch: Removal - Refitting**) (52A, Non-side opening element mechanisms).

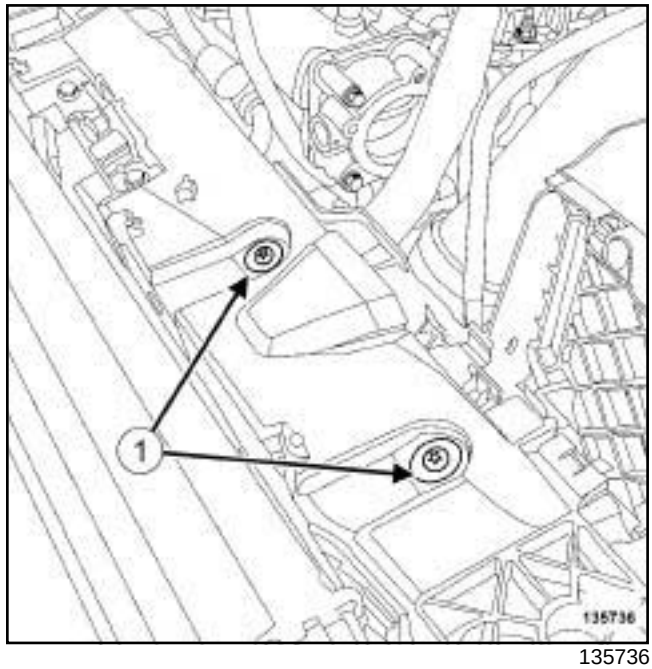

135736

❑ Remove the bolts (**1**) from the engine wiring harness channel.

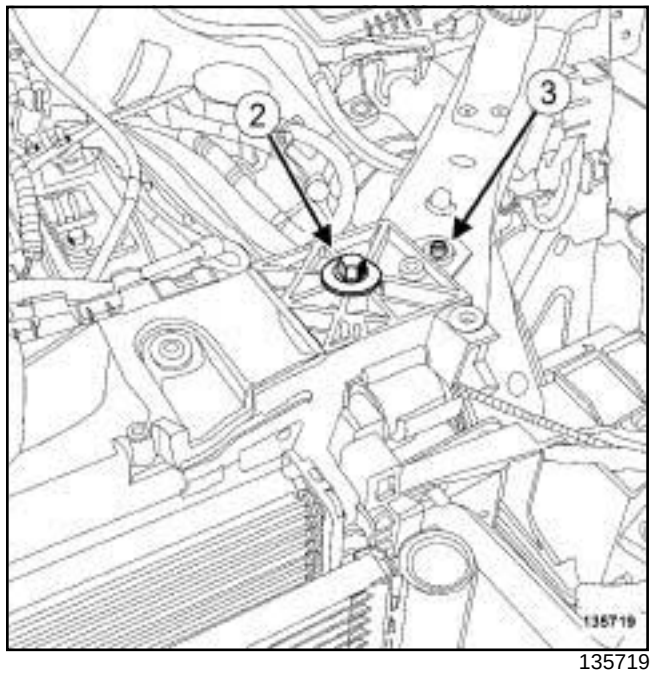

135719

❑ Remove:

- the upper bolts (**2**) from the front end panel,
- the front panel clips (**3**) .

F4R

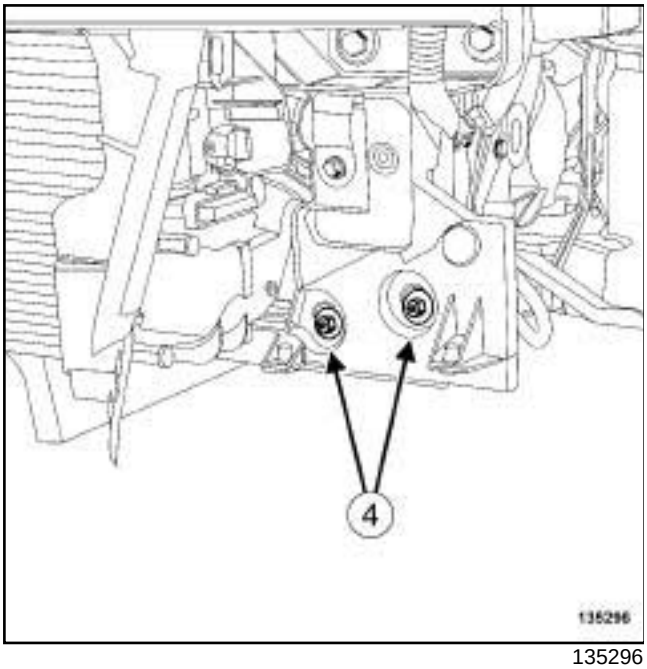

135296

❑ Remove the lower bolts (**4**) from the front end panel.

❑ Slightly tilt the front panel towards the front of the vehicle.

II - OPERATION FOR REMOVAL OF PART CONCERNED

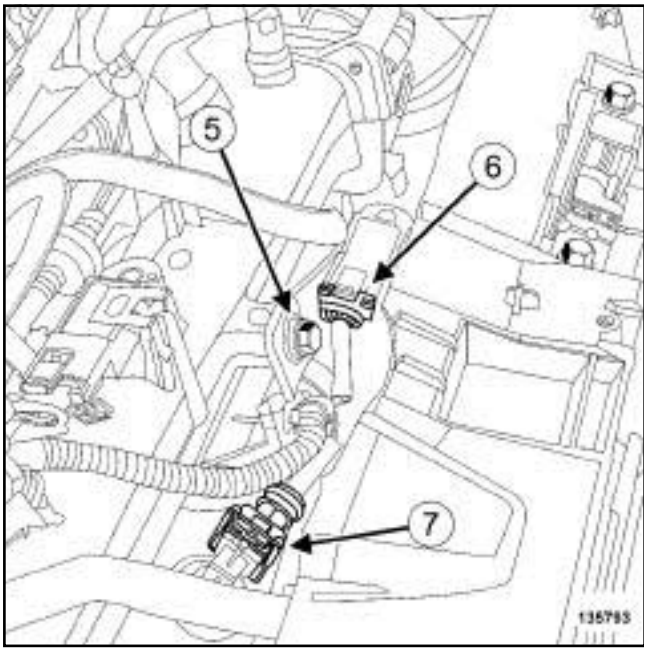

135793

❑ Remove the bolt (**5**) from the intercooler air outlet pipe.

❑ Disconnect:

- the turbocharger pressure sensor connector (**6**) ,
- the air temperature sensor connector (**7**) .

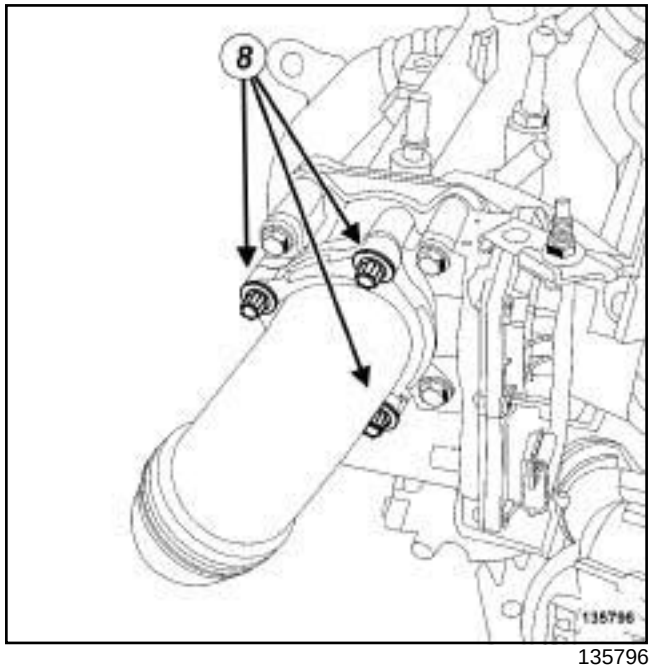

135796

❑ Remove the intercooler outlet pipe bolts (**8**) from the throttle unit.

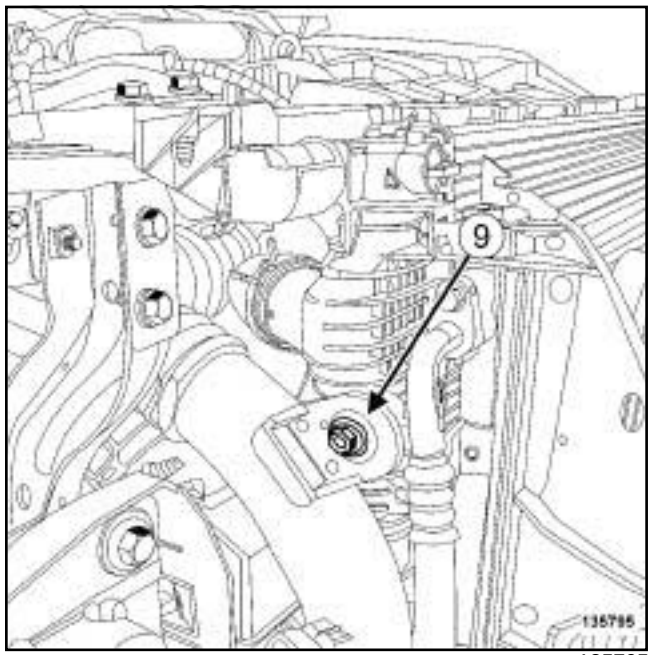

135795

❑ Remove the bolt (**9**) from the intercooler air outlet pipe.

F4R

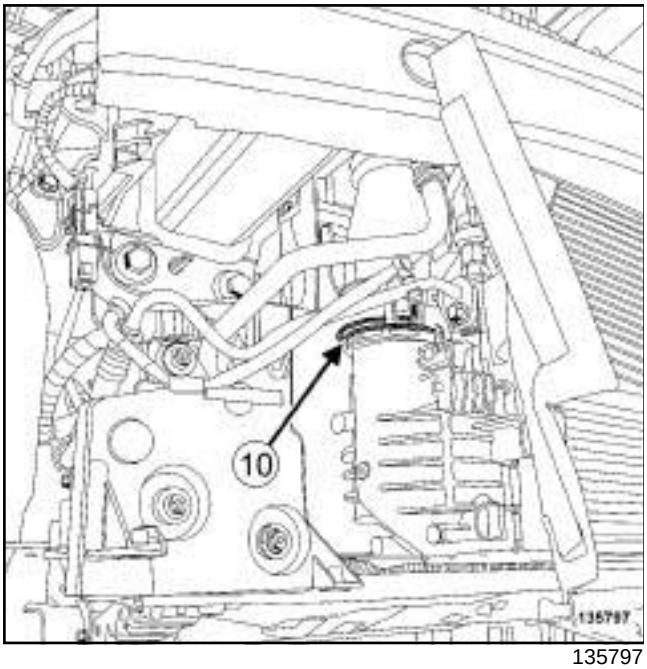

135797

❑ Move aside the clip (**10**) for the intercooler air outlet pipe.

❑ Remove:

- the intercooler air outlet pipe,
- the intercooler air outlet pipe seals.

REFITTING

I - REFITTING PREPARATION OPERATION

❑ **parts always to be replaced: turbocharger air cooler air outlet pipe seal (10,09,04,05)**.

II - REFITTING OPERATION FOR PART CONCERNED

❑ Fit the intercooler air outlet pipe equipped with a new seal.

❑ Clip the intercooler air outlet pipe onto the intercooler.

❑ Refit the bolts for the intercooler air outlet pipe.

❑ Connect:

- the air temperature sensor connector,
- the turbocharging pressure sensor connector.

III - FINAL OPERATION

❑ Refit:

- the lower bolts from the front end panel,
- the front end panel upper bolts,
- the engine wiring channel bolts,
- the bonnet catch (see **Bonnet latch: Removal - Refitting**) (52A, Non-side opening element mechanisms),
- the frontal impact cross member (see **Front impact cross member: Removal - Refitting**) (41A, Front lower structure),
- the front bumper supports (see **Front bumper support: Removal - Refitting**) (42A, Front upper structure),
- the headlights (see **Front headlight: Removal - Refitting**) (80B, Headlights),
- the side air deflectors,
- the upper air deflector,
- the front bumper (see **Front bumper: Removal - Refitting**) (55A, Exterior protection),
- the front section of the front wheel arch liners (see **Front wheel arch liner: Removal - Refitting**) (55A, Exterior protection),
- the front wheels (see **Wheel: Removal - Refitting**) (35A, Wheels and tyres),
- the engine undertray,
- the petrol injection computer cover,
- the engine cover.

Manual priming pump: Removal - Refitting

F9Q or K9K

IMPORTANT

To avoid all risk of damage to the systems, apply the safety and cleanliness instructions and operation recommendations before carrying out any repair (see **13B**, **Diesel injection**, **Diesel injection: Precautions for repair**, page **13B-1**) .

WARNING

To avoid any corrosion or damage, protect the areas on which fuel is likely to run.

WARNING

To prevent impurities from entering the circuit, place protective plugs on all fuel circuit components exposed to the open air.

WARNING

Keep the pipe unions away from contaminated areas.

REMOVAL

OPERATION FOR REMOVAL OF PART CONCERNED

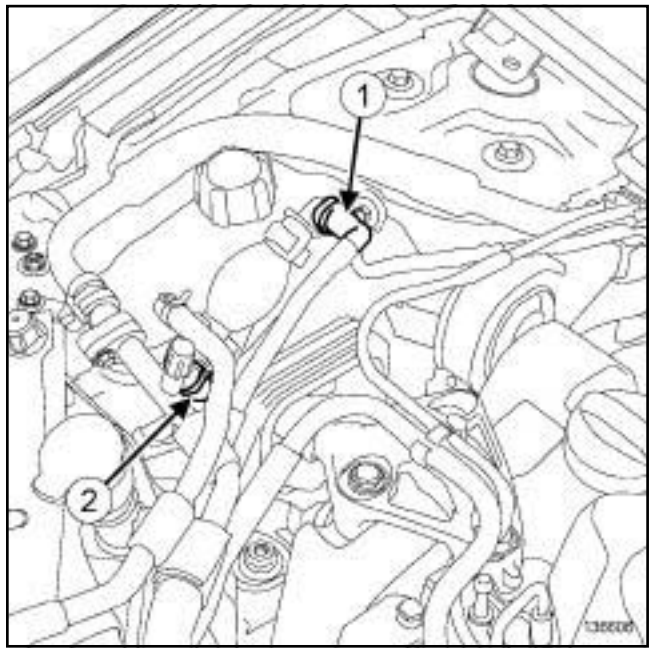

136606

❑ Disconnect from the manual priming pump:

- the fuel supply pipe union (**1**) from the fuel filter outlet,
- the fuel supply pipe union (**2**) at the inlet of the high pressure pump.

❑ Fit the correct blanking plugs on:

- the fuel supply pipe opening at the outlet of the fuel filter,
- the fuel supply pipe opening at the inlet of the high pressure pump,
- the openings of the manual priming pump.

F9Q or K9K

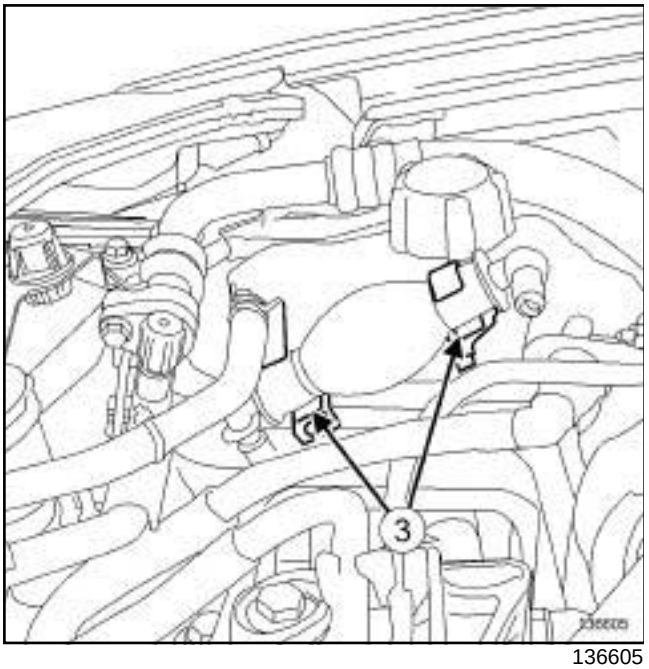

136605

- Unclip the manual priming pump from the expansion bottle at (**3**) .
- Remove the manual priming pump.

REFITTING

REFITTING OPERATION FOR PART CONCERNED

- Fit the manual priming pump.
- Clip the manual priming pump onto the expansion bottle.
- Remove the blanking plugs from:
  - the openings of the manual priming pump,
  - the fuel supply pipe opening at the inlet of the high pressure pump,
  - the fuel supply pipe opening at the outlet of the fuel filter.
- Connect:
  - the fuel supply pipe union at the inlet of the high pressure pump on the manual priming pump.
  - the fuel supply pipe union at the outlet of the fuel filter on the manual priming pump,
- Prime the fuel circuit using the manual priming pump.
- Start the engine, then let it run for a few minutes to check that it has started properly and that there are no leaks.

F9Q or K9K

IMPORTANT
Consult the safety and cleanliness advice and operation recommendations before carrying out any repair (see **13B**, **Diesel injection**, **Diesel injection: Precautions for repair**, page **13B-1**) .

WARNING
To avoid any corrosion or damage, protect the areas on which fuel is likely to run.

REMOVAL

I - REMOVAL PREPARATION OPERATION

❏ Position the vehicle on a two-post lift (see **Vehicle: Towing and lifting**) (02A, Lifting equipment).

❏ Remove:

- the front right-hand wheel (see **Wheel: Removal - Refitting**) (35A, Wheels and tyres),
- the front section of the front right-hand wheel arch liner (see **Front wheel arch liner: Removal - Refitting**) (55A, Exterior protection).

II - REMOVAL OF PART CONCERNED

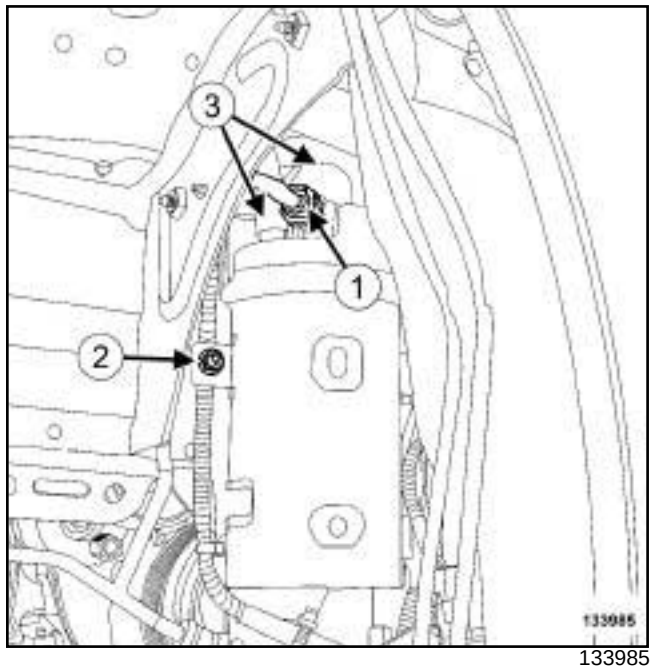

133985

❏ Disconnect the diesel fuel heater connector (**1**) .

❏ Remove the fuel filter mounting nut (**2**) .

WARNING
Keep the pipe unions away from contaminated areas.

❏ Disconnect the fuel pipes (**3**) on the fuel filter

❏ Fit blanking plugs.

❏ Remove the fuel filter.

Note:
If the fuel filter is to be re-used, fit blanking plugs.

REFITTING

I - REFITTING PREPARATION OPERATION

❏ **parts always to be replaced: fuel filter seal (11, 03,01,07)**.

II - REFITTING OPERATION FOR PART CONCERNED

❏ Refit the fuel filter onto the mounting.

❏ Connect the fuel supply pipes.

❏ Refit the fuel filter mounting nut.

❏ Connect the diesel fuel heater connector.

F9Q or K9K

Bleeding the circuit

- ❑ Fit a pipe to the injector rail fuel supply union.
- ❑ Push the pipe onto the injector rail fuel supply union.
- ❑ Prime the fuel supply circuit using the manual priming pump until fuel runs into the container.

III - DRAINING THE WATER INSIDE THE FUEL FILTER

- ❑ Periodically drain any water contained inside the fuel filter.
- ❑ For filters without a water presence sensor:
  - open the drain plug,
  - let the water flow out,
  - close the plug.
- ❑ For filters with a water presence sensor:
  - disconnect the water presence sensor offset connector,
  - unclip the water presense sensor connector,
  - loosen the water presence sensor by one turn,
  - let the water flow out,
  - tighten the water presence sensor.

IV - FINAL OPERATION

- ❑ Check that there are no fuel leaks.
- ❑ Refit:
  - the front section of the front right-hand wheel arch liner (see **Front wheel arch liner: Removal - Refitting**) (55A, Exterior protection),
  - the front right-hand wheel (see **Wheel: Removal - Refitting**) (35A, Wheels and tyres).

F4R or K4M

IMPORTANT

During this operation, be sure to:

- refrain from smoking or bringing red hot objects close to the working area,
- be careful of fuel splashes when disconnecting the union.

IMPORTANT

Wear goggles with side protectors for this operation.

IMPORTANT

Wear leaktight gloves (Nitrile type) for this operation.

WARNING

To prevent impurities from entering the circuit, place protective plugs on all fuel circuit components exposed to the open air.

WARNING

To avoid any corrosion or damage, protect the areas on which fuel is likely to run.

REMOVAL

K4M

❏ The fuel filter is located in the tank and integrated into the « pump - sender - filter » assembly. To remove the fuel filter, remove the « pump - sender - filter assembly » (see **19C**, **Tank**, **Fuel level sensor module: Removal - Refitting**, page **19C-16**) .

I - REMOVAL PREPARATION OPERATION

F4R

❏ Position the vehicle on a two-post lift (see **Vehicle: Towing and lifting**) (02A, Lifting equipment).

❏ Disconnect the battery (see **Battery: Removal - Refitting**) (80A, Battery).

II - OPERATION FOR REMOVAL OF PART CONCERNED

F4R

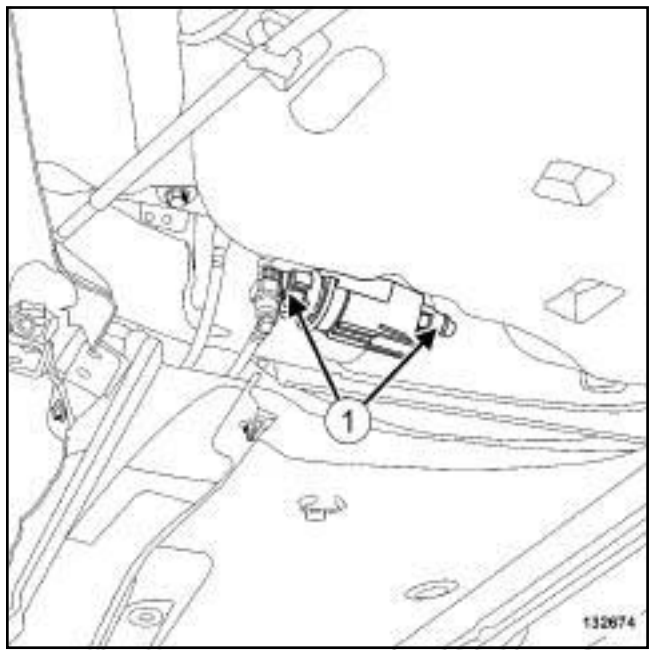

132674

❏ Disconnect the fuel filter unions (**1**) .

❏ Insert the blanking plugs.

F4R or K4M

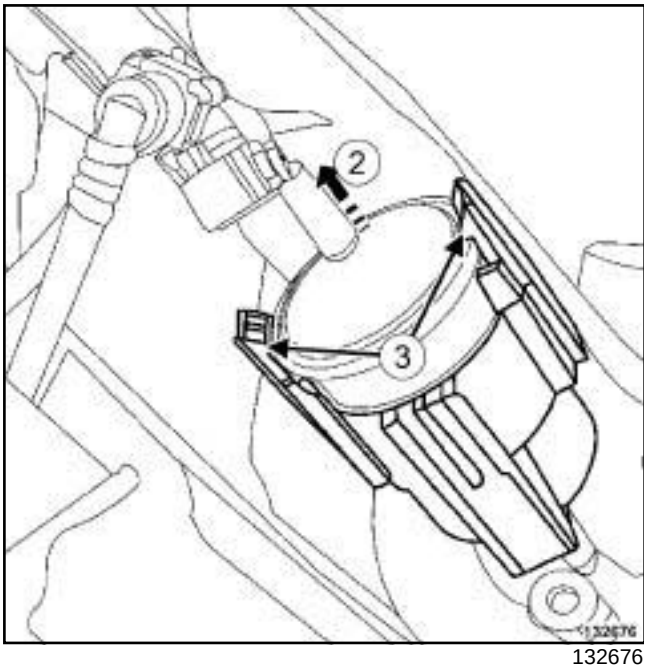

132676

- ❑ Unclip (**2**) the fuel filter at (**3**) .
- ❑ Remove the fuel filter from the fuel tank.

REFITTING

I - REFITTING OPERATION FOR PART CONCERNED

F4R

- ❑ Refit the fuel filter.
- ❑ Clip on the fuel filter.
- ❑ Remove the blanking plugs.
- ❑ Connect the unions to the fuel filter.

II - FINAL OPERATION

F4R

- ❑ Connect the battery (see **Battery: Removal - Refitting**) (80A, Battery).

Fuel pressure: check

F4R or K4M

Essential special tooling	
Mot. 1311-01	Fuel pressure test kit.
Mot. 1311-08	Union for measuring fuel pressure.

IMPORTANT

During this operation, be sure to:

- refrain from smoking or bringing red hot objects close to the working area,
- be careful of fuel splashes when disconnecting the union.

IMPORTANT

Wear goggles with side protectors for this operation.

IMPORTANT

Wear leaktight gloves (Nitrile type) for this operation.

WARNING

To avoid any corrosion or damage, protect the areas on which fuel is likely to run.

CHECKING

I - PREPARATION OPERATION FOR CHECK

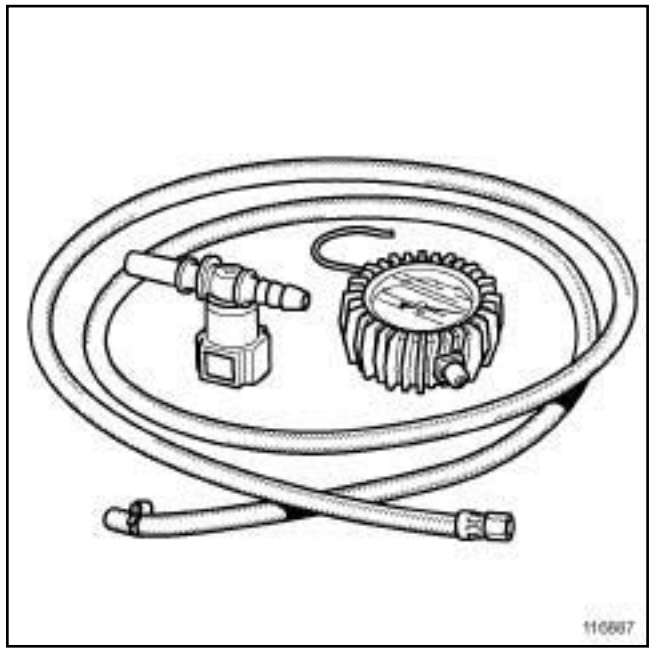

116887

❑ Ensure you have a checking tool **(Mot. 1311-01)** and a « T » union **(Mot. 1311-08)**.

❑ Remove the front engine cover.

F4R or K4M

II - TEST OPERATION

F4R

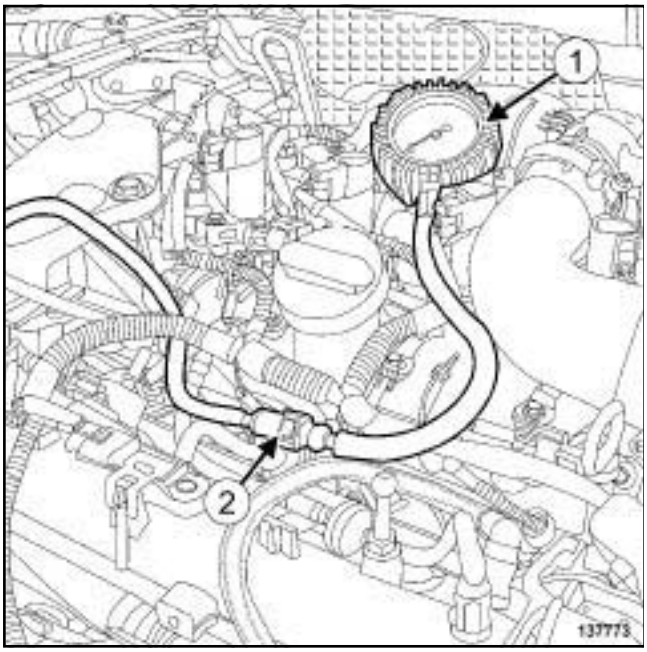

137773

❏ Disconnect fuel supply pipe union on the injector rail.

❏ Connect:

- the pipe fitted with a test pressure gauge **(Mot. 1311-01)** (**1**) , with the « T » union **(Mot. 1311-08)** (**2**) ,
- the « T » union to the injector rail,
- the injector rail fuel supply union to the « T » union **(Mot. 1311-08) (Mot. 1311-08)**.

K4M

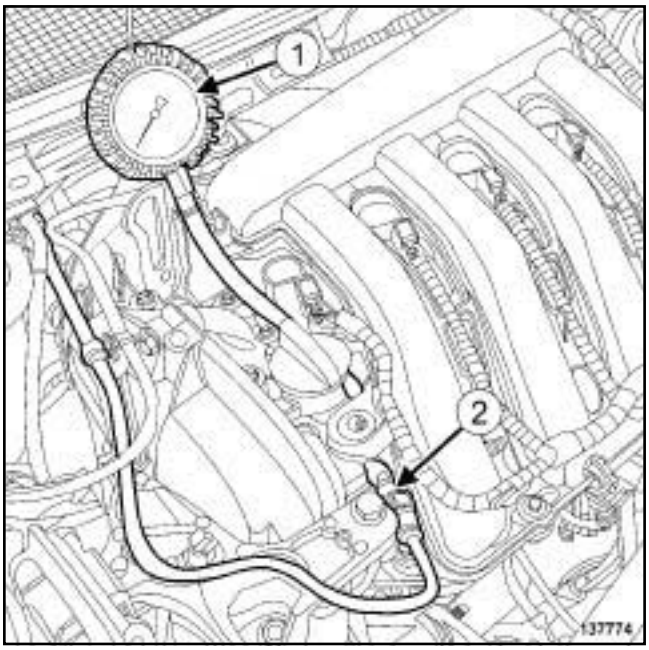

137774

❏ Disconnect fuel supply pipe union on the injector rail.

❏ Unclip the fuel pipe from the right-hand suspended engine mounting.

❏ Connect:

- the pipe fitted with a test pressure gauge **(Mot. 1311-01)** (**1**) , with the « T » union **(Mot. 1311-08)** (**2**) ,
- the « T » union **(Mot. 1311-08)** to the injector rail,
- the injector rail fuel supply union to the « T » union **(Mot. 1311-08)**.

❏ Start the engine.

❏ Record the pressure; this should be constant at **3.5 bar**.

> Note:
>
> It may take a few seconds to obtain a correct injector rail pressure reading.

❏ Switch off the engine.

❏ Start the engine.

❏ Record the pressure; this should be constant at **3.5 bar**.

❏ Switch off the engine.

F4R or K4M

III - FINAL OPERATION

- ❑ Disconnect the « T » union **(Mot. 1311-08)** from the injector rail.
- ❑ Separate the test tool **(Mot. 1311-01)** from the « T » union.
- ❑ Connect the fuel supply pipe union on the injector rail.

K4M or M4R

- ❑ Clip the fuel pipe on the right-hand suspended engine mounting.

- ❑ Refit the engine cover.

F4R or K4M

Essential special tooling	
Mot. 1311-01	Fuel pressure test kit.
Mot. 1311-08	Union for measuring fuel pressure.

Essential equipment
graduated measuring cylinder

IMPORTANT

During this operation, be sure to:

- refrain from smoking or bringing red hot objects close to the working area,
- be careful of fuel splashes when disconnecting the union.

IMPORTANT

Wear leaktight gloves (Nitrile type) for this operation.

IMPORTANT

Wear goggles with side protectors for this operation.

WARNING

To avoid any corrosion or damage, protect the areas on which fuel is likely to run.

I - PREPARATION OPERATION FOR CHECK

❏ Remove the front engine cover.

❏ Ensure you have a checking tool **(Mot. 1311-01)** and a « T » union **(Mot. 1311-08)**.

❏ Assemble the long hose of the checking tool **(Mot. 1311-01)** and the « T » union **(Mot. 1311-08)**.

❏ Disconnect the fuel supply union on the injector rail.

F4R

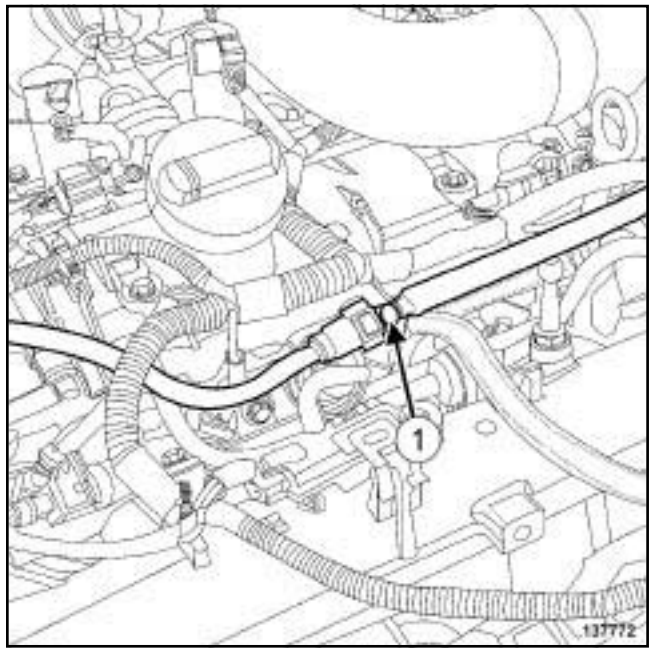

137772

❏ Connect:

- the « T » union **(Mot. 1311-08)** (**1**) to the injector rail,
- the fuel supply union to the « T » union **(Mot. 1311-08)**

F4R or K4M

K4M

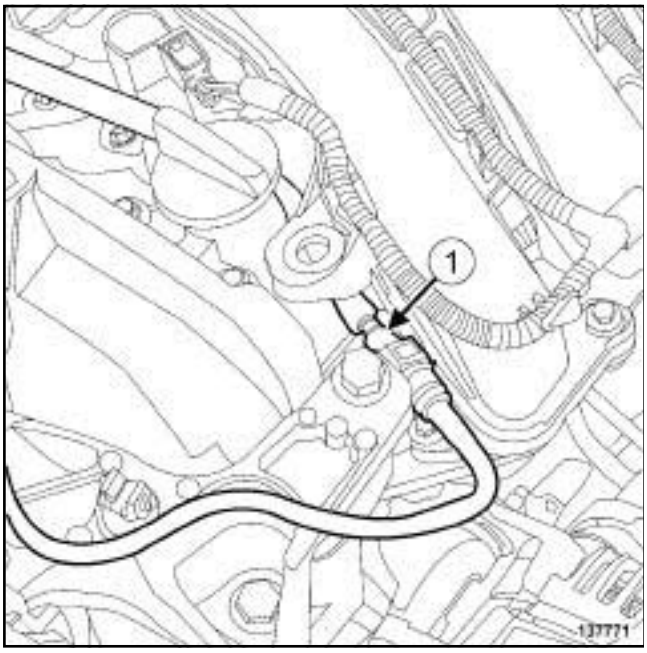

137771

- ❏ Unclip the fuel pipe from the right-hand suspended engine mounting.
- ❏ Connect:
  - the « T » union **(Mot. 1311-08)** (**1**) to the injector rail,
  - the fuel supply union to the « T » union **(Mot. 1311-08)**.

M4R

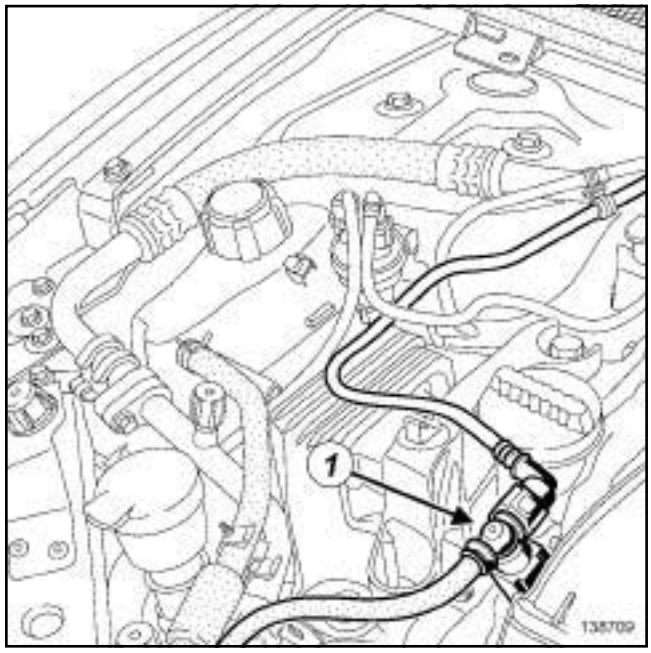

138709

- ❏ Unclip the fuel pipe from the right-hand suspended engine mounting.
- ❏ Disconnect the fuel supply union on the injector rail.
- ❏ Connect:
  - the « T » union **(Mot. 1311-08)** (**1**) to the injector rail,
  - the fuel supply union to the « T » union **(Mot. 1311-08)**.

II - FUEL FLOW CHECK

- ❏ Immerse the hose in a **2000 ml graduated measuring cylinder**.
- ❏ Unclip the Protection and Switching Unit cover.

F4R or K4M

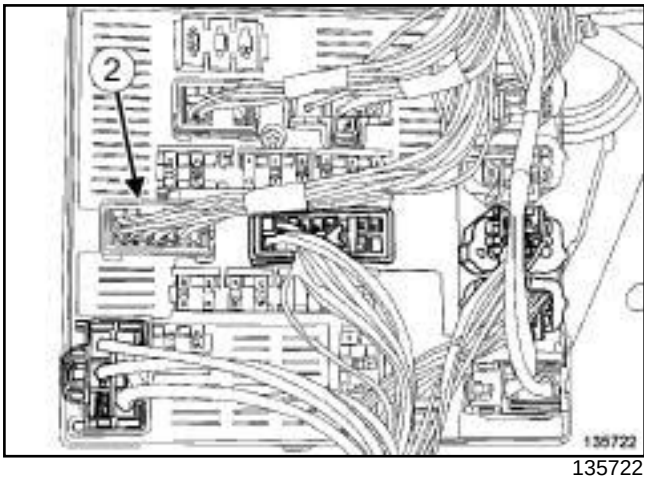

135722

❑ Disconnect brown 12 track connector (**2**) .

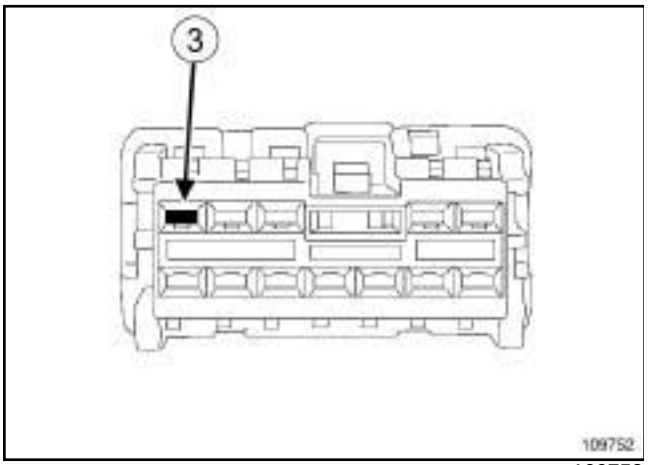

109752

❑ Connect the terminal (**3**) of the brown connector to a + battery supply to operate the fuel pump.

> Note:
>
> The flow reading should be between **80and120 l/h.**

❑ Remove the + battery feed of terminal (**3**) from the brown connector.

III - FINAL OPERATION

❑ Connect the brown 12-track connector.

❑ Clip on the Protection and Switching Unit cover.

❑ Disconnect:

- the fuel supply union from the « T » union **(Mot. 1311-08)**,
- the « T » union **(Mot. 1311-08)** on the injector rail.

❑ Connect the fuel supply union on the injector rail.

❑ Separate the checking tool **(Mot. 1311-01)** from the « T » union **(Mot. 1311-08)**.

K4M or M4R

❑ Clip the fuel pipe on the right-hand suspended engine mounting.

❑ Refit the engine cover.

Diesel injection: Precautions for repair

F9Q or K9K

I - RISKS RELATING TO CONTAMINATION

The high-pressure direct injection system is highly sensitive to contamination. The risks caused by contamination are:

- damage to or destruction of the high pressure injection system,
- a component seizing,
- a component not being properly sealed.

All After-Sales operations must be performed under very clean conditions. Having carried out an operation in good conditions means that no impurities (particles a few microns in size) have penetrated the system during dismantling.

The cleanliness principle must be applied from the filter to the injectors.

What are the sources of contamination?

- metal or plastic swarf,
- paint,
- fibres:
  - cardboard,
  - brushes,
  - paper,
  - clothing,
  - cloth,
- foreign bodies such as hair,
- ambient air,
- etc.

WARNING
Do not clean the engine with a high pressure cleaner to prevent damaging the connections.

1 - Cleaning cloths

Use lint free cleaning cloths (see **Vehicle: Parts and ingredients for the repairwork**) .

The use of rags or ordinary paper towels is prohibited: these produce lint and lose fibres, which then contaminate the fuel circuit.

Each cloth must only be used once.

2 - Blanking plugs

The blanking plugs are used to cap the fuel circuit once it is opened and to therefore prevent contaminants from entering.

A set of blanking plugs should be used once only and used plugs must be discarded: once used, the plugs are soiled and cleaning them is not sufficient to make them reusable.

Unused plugs must also be discarded and must not be used when carrying out work on an injection system.

Part number for set of blanking plugs: (see **Vehicle: Parts and ingredients for the repairwork**) (04B, Consumables - Products)

Note:
There is no specific set of blanking plugs for S9U and S9W engines. In order to comply with the cleanliness recommendations, use plugs that are compatible with the blanking plug sets for F9Q, G9U, G9T or ZD3 engines.

3 - Protective bags

Use hermetically-resealable plastic bags, using adhesive tape, for example, to store components which will be refitted and reused. Stored parts will therefore be less subject to the risk of contamination.

These are single-use bags: after use they must be discarded.

4 - Cleaning products

Two cleaning products can be used:

- an injector cleaner (see **Vehicle: Parts and ingredients for the repairwork**) (04B, Consumables - Products),
- an aerosol spray brake cleaner (see **Vehicle: Parts and ingredients for the repairwork**) (04B, Consumables - Products).

To use the injector cleaner, be sure to have a clean brush in good condition (the brush must not lose any bristles) as well as a clean container which has no impurities in it.

Note:
Use a new injector cleaner each time work is carried out (a used cleaning agent will contain impurities).

F9Q or K9K

II - ADVICE TO BE FOLLOWED BEFORE ANY OPERATION

1) Carry out the work in a clean working area and take care to protect removed components from dust using plastic bags which are hermetically-resealable, for example.

2) Always order the following from the Parts Department before carrying out work:

- **a new set of blanking plugs**, specific to the engine,
- enough lint-free **cleaning cloths**.
- one of the two **cleaning products** for fuel pipe unions,
- **the parts that are always to be replaced** after each removal operation, mentioned in the operational procedures specific to the vehicle (see related Workshop Repair Manual).

3) Wear safety goggles fitted with side shields to prevent the cleaning product from splashing the eyes.

4) Wear leaktight protective gloves (Nitrile type) to avoid prolonged contact with the skin.

Note:

When using leather protective gloves, wear a pair of leaktight protective gloves (Nitrile type) over the top.

5) Before carrying out work on the injection system, use plastic bags or clean cloths, for example, to protect:

- the accessories and timing belts,
- the electrical accessories (starter, alternator, power-assisted steering pump, sensors and electrical connectors),
- the flywheel face.

III - INSTRUCTIONS TO BE FOLLOWED DURING THE OPERATION

Wash your hands before and while carrying out the work.

Replace leaktight protective gloves (Nitrile type) when they are soiled or damaged.

All components removed from the injection system must be stored in a hermetically sealed plastic bag once they have been capped.

Reseal the bag hermetically, for example using adhesive tape, even if the bag must be opened shortly afterwards: ambient air can be a source of impurities.

After opening the fuel circuit, the use of brushes, cleaning agents, air blow guns, rifle-type brushes or standard cloths is strictly prohibited: These items are likely to allow impurities to enter the system.

When replacing a component with a new one or when refitting it after storing it in a plastic bag, do not unpack it until it is time to fit it on the vehicle.

IV - CLEANING

There are currently two procedures for cleaning the fuel circuit before opening it in order to carry out work in the workshop.

These procedures enable the fuel circuit to be cleaned to prevent contamination from entering: they both have the same end result and neither is preferred over the other.

1 - Cleaning using injector cleaner

Clear the access to the unions that need opening, following the work procedures specific to the vehicle (see the relevant Workshop Repair Manual).

Protect sections which are sensitive to fuel leaks.

Pour the injector cleaning agent into a container which is free from impurities.

IMPORTANT

Wear leaktight gloves (Nitrile type) for this operation.

Dip a clean brush, which is not shedding bristles, into the container of injector cleaning agent.

IMPORTANT

Wear goggles with side protectors for this operation.

Clean the unions carefully using the brush and the injector cleaning agent.

Blast the components that have been cleaned with compressed air (tools, workbench, and also parts, unions and around the injection system). Check that no bristles from the brush have come away and that the area is clean.

Wipe the sections that were cleaned with fresh cleaning cloths.

Open the circuit at the unions and immediately fit the relevant blanking plugs.

WARNING

To prevent impurities from entering, once the fuel circuit is opened, it must not be blasted with compressed air. Use cleaning cloths only, if necessary.

2 - Using the brake cleaner

Clear the access to the unions that need opening, following the work procedures specific to the vehicle (see the relevant Workshop Repair Manual).

Protect sections which are sensitive to fuel leaks.

IMPORTANT

Wear leaktight gloves (Nitrile type) for this operation.

IMPORTANT

Wear goggles with side protectors for this operation.

Spray the brake cleaner onto the unions to be opened.

Clean the unions carefully using fresh cleaning cloths.

Blast the components that have been cleaned with compressed air (tools, workbench, and also parts, unions and around the injection system). Check that no bristles from the brush have come away and that the area is clean.

Open the circuit at the unions and immediately fit the relevant blanking plugs.

WARNING

To prevent impurities from entering, once the fuel circuit is opened, it must not be blasted with compressed air. Use cleaning cloths only, if necessary.

F9Q or K9K

F9Q

F9Q or K9K

Set of plugs:

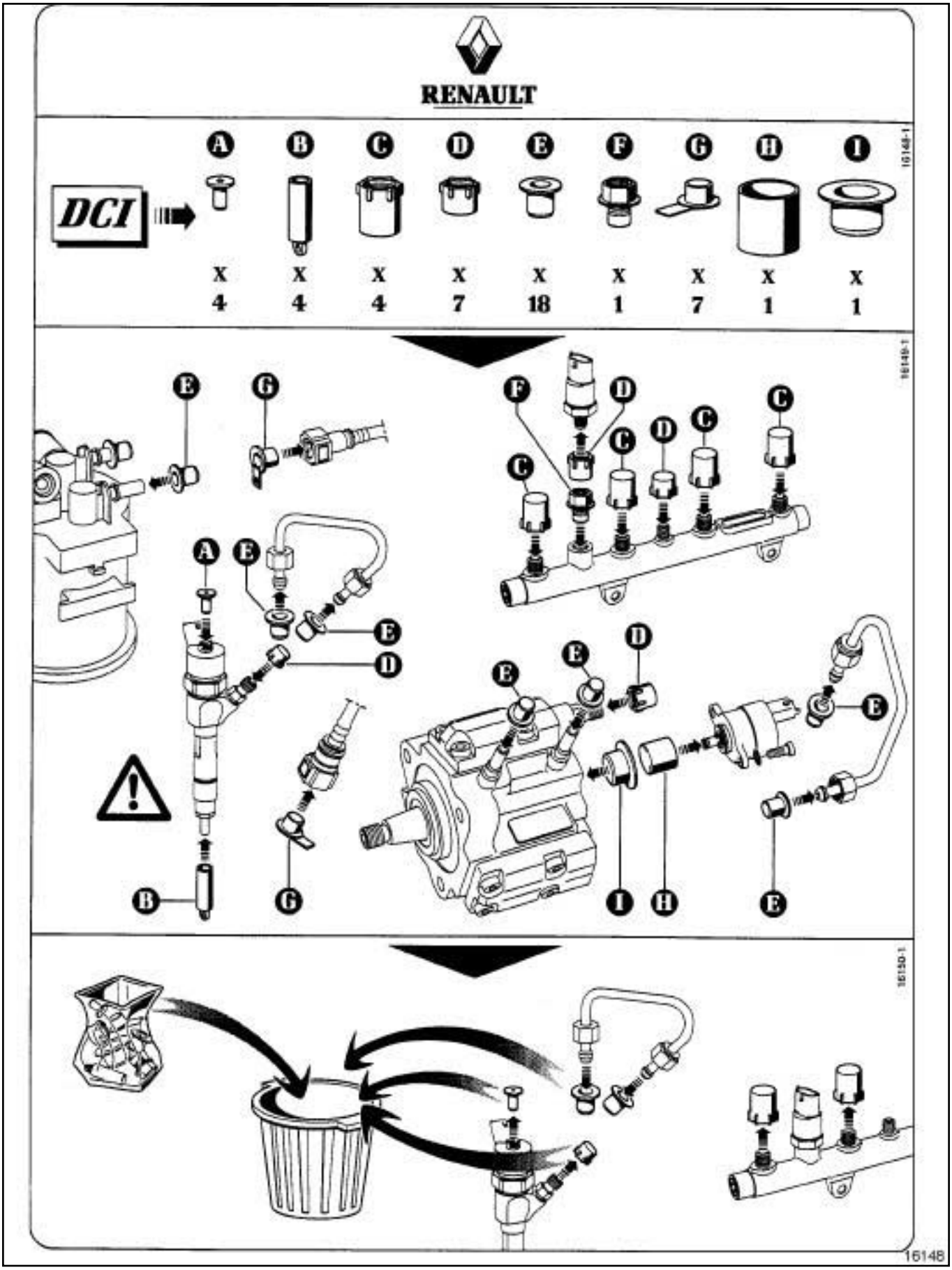

F9Q or K9K

16148

F9Q or K9K

K9K

F9Q or K9K

Set of plugs for DELPHI injection:

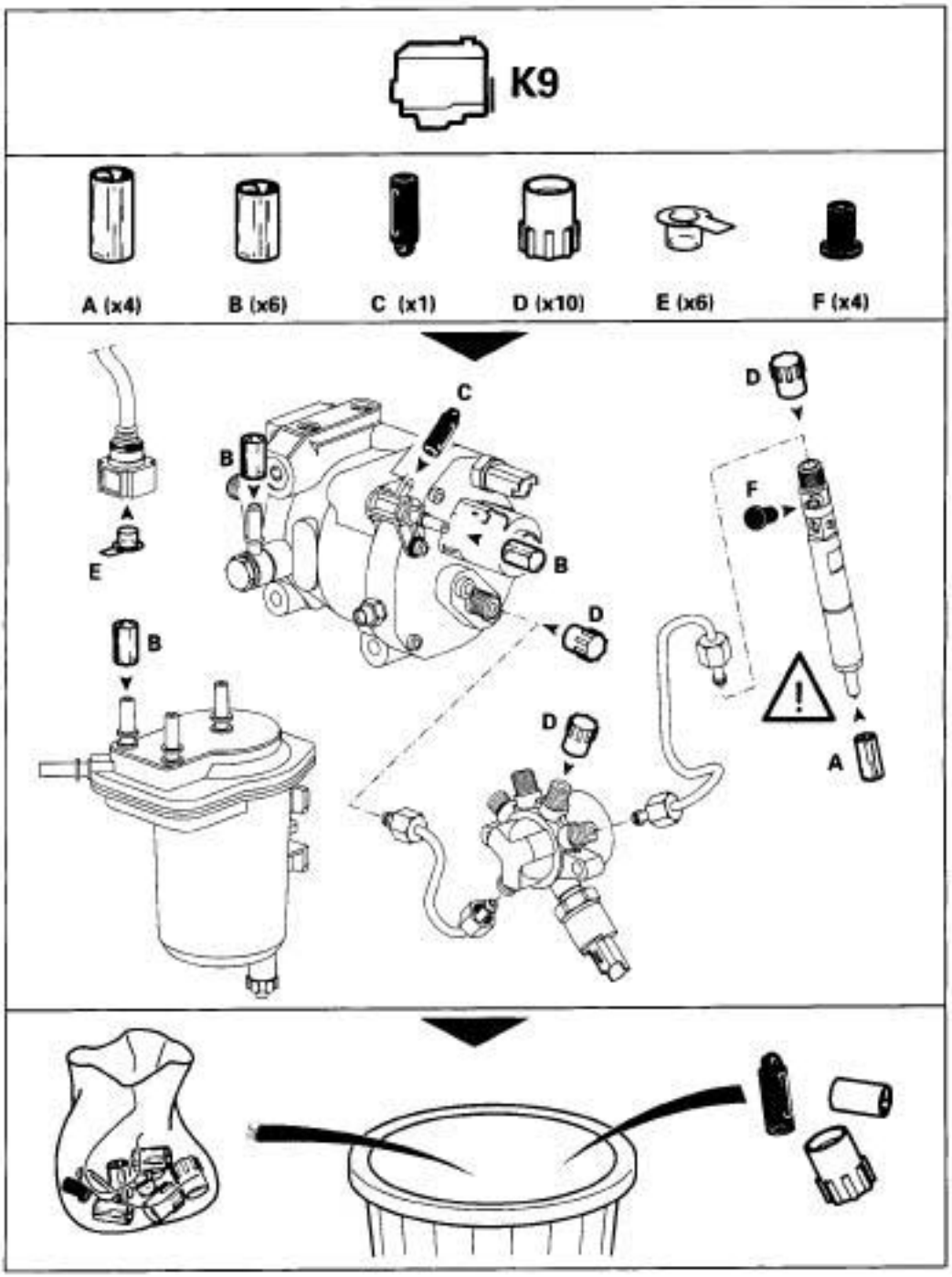

20977

F9Q or K9K

20977

F9Q or K9K

Set of plugs for SIEMENS injection:

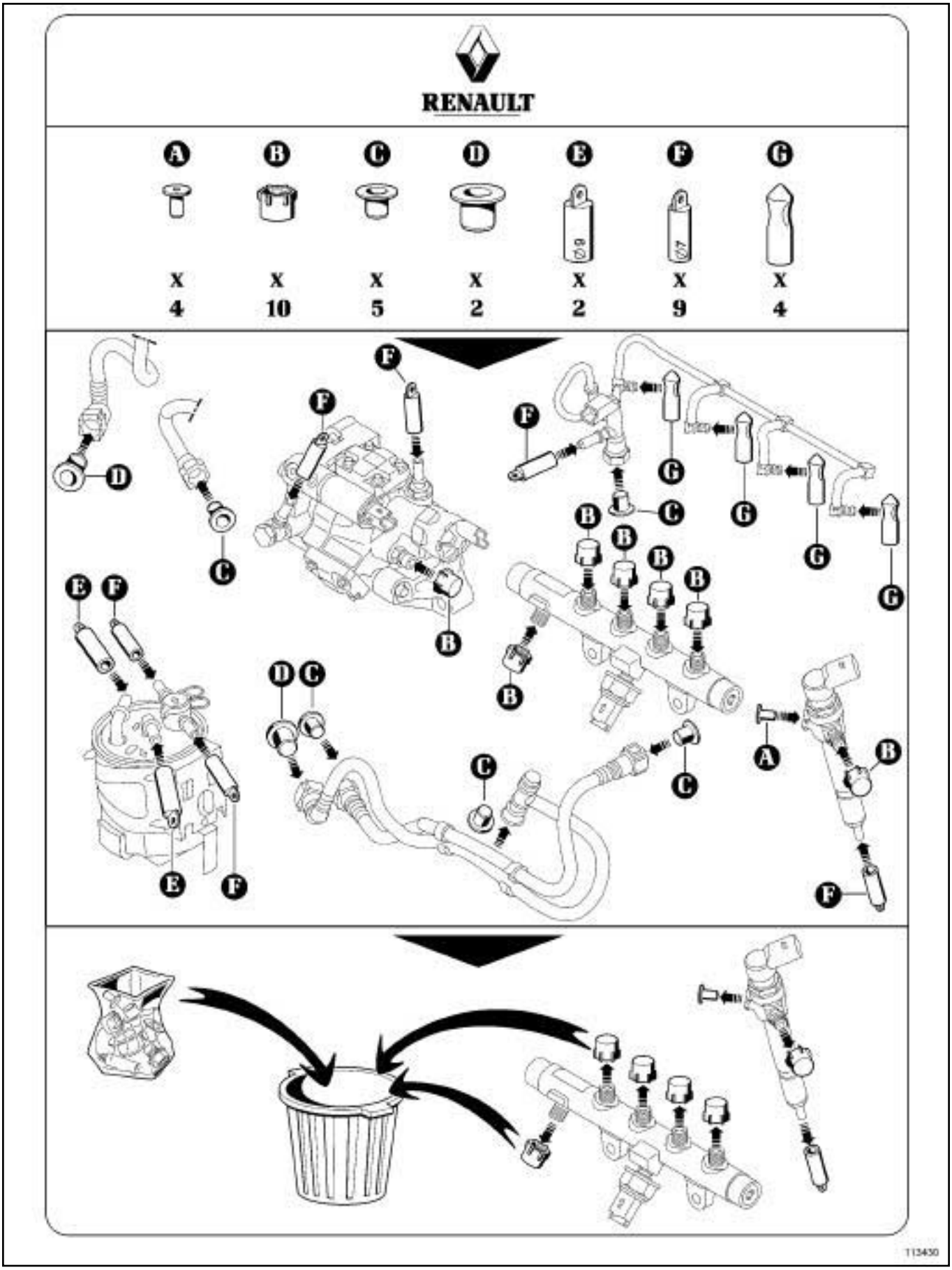

F9Q or K9K

113430

K9K, and 832

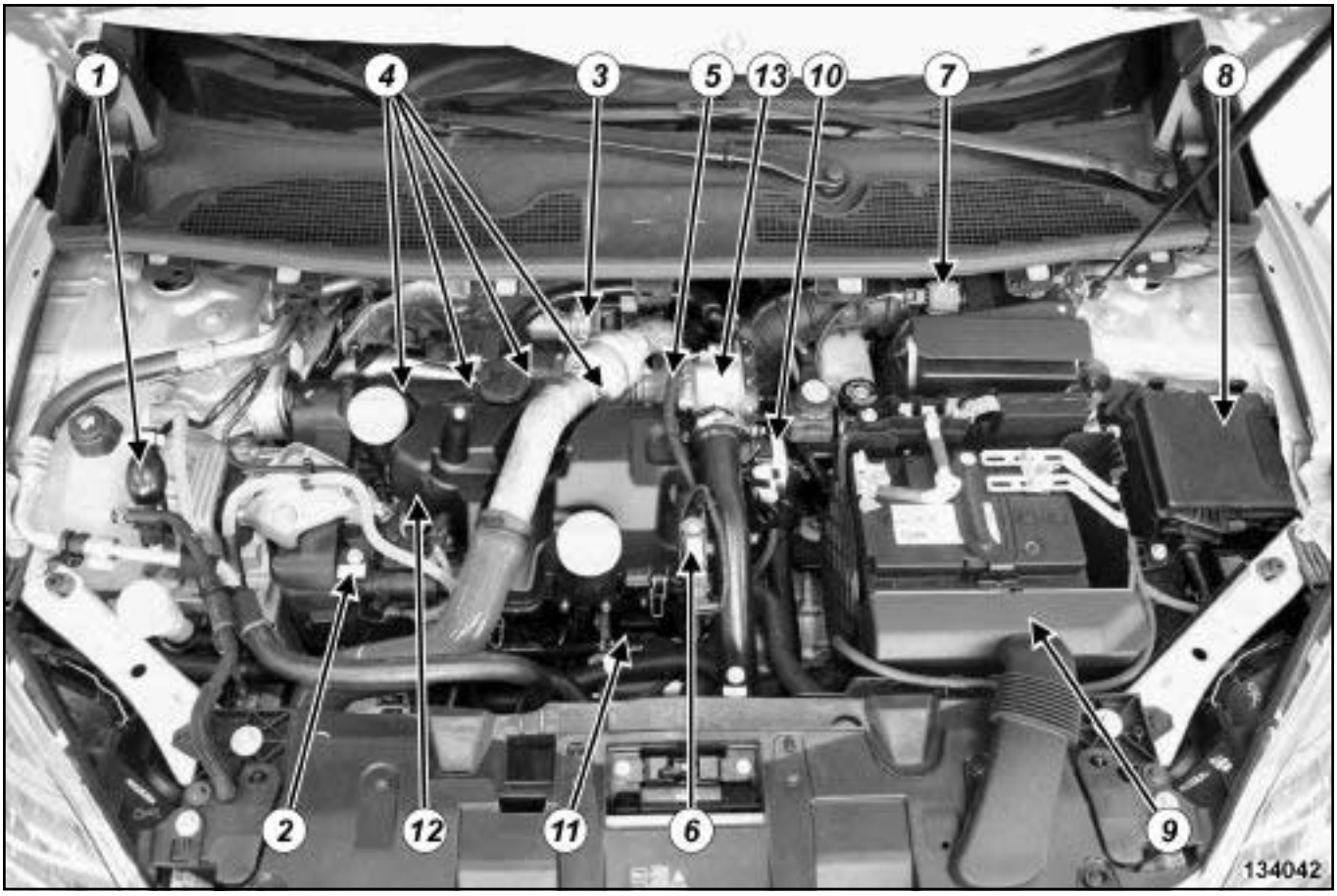

134042

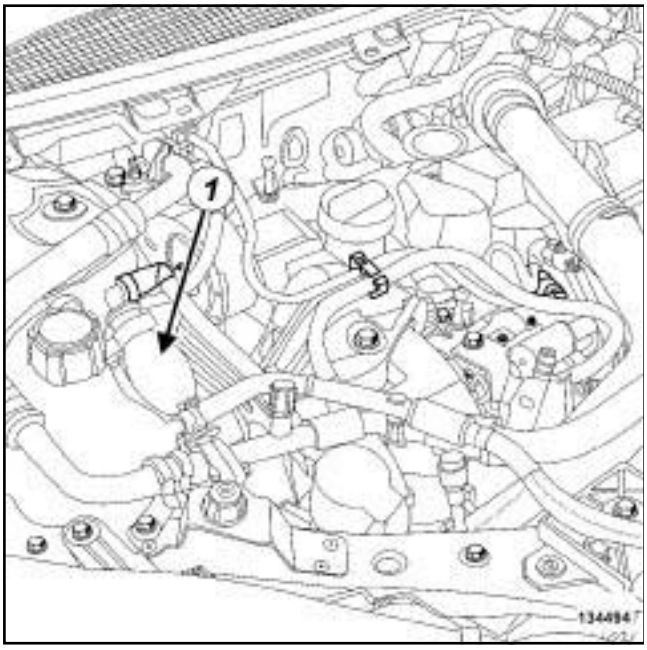

134494

(**1**) Manual priming pump

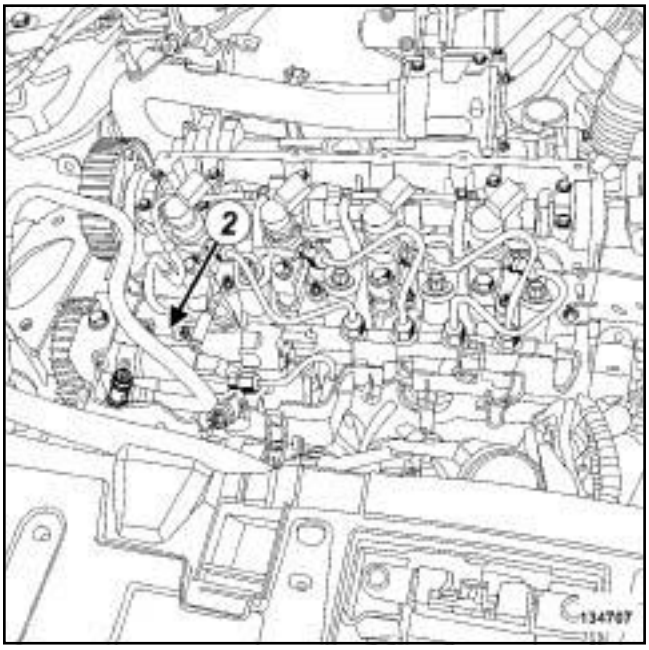

134707

(**2**) High pressure pump

K9K, and 832

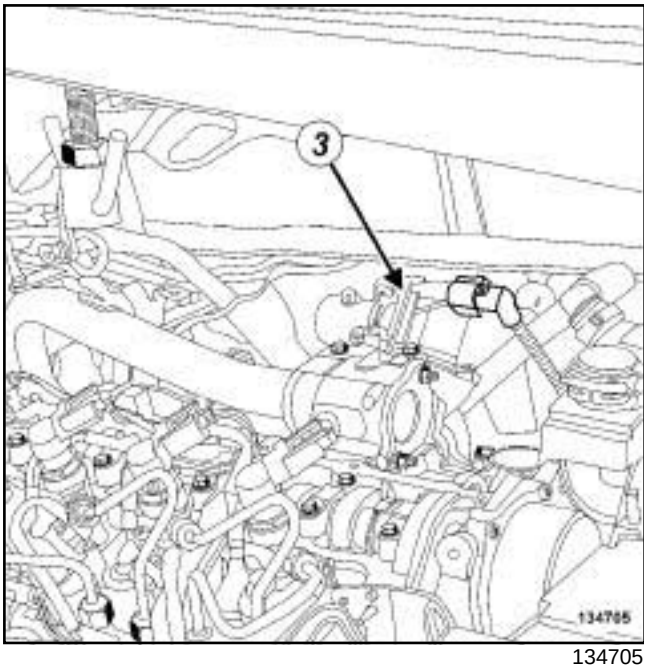

134705

(**3**) Exhaust gas recirculation solenoid valve

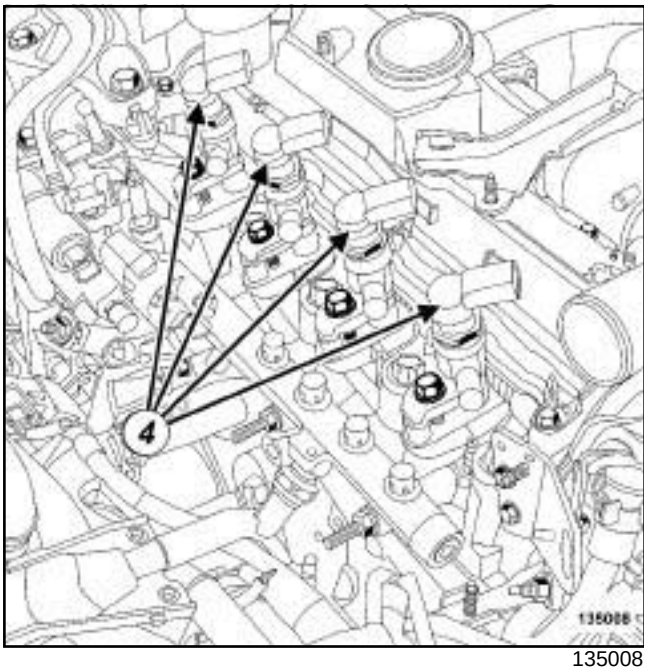

135008

(**4**) Diesel injectors

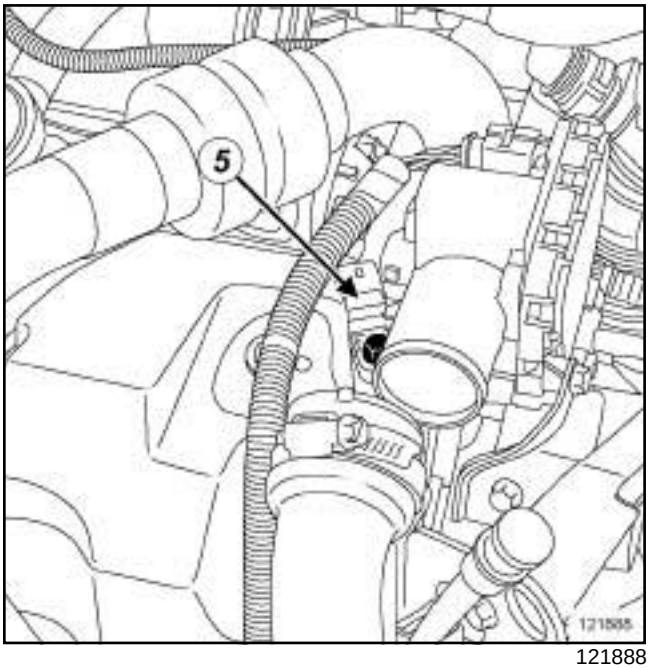

121888

(**5**) Camshaft position sensor

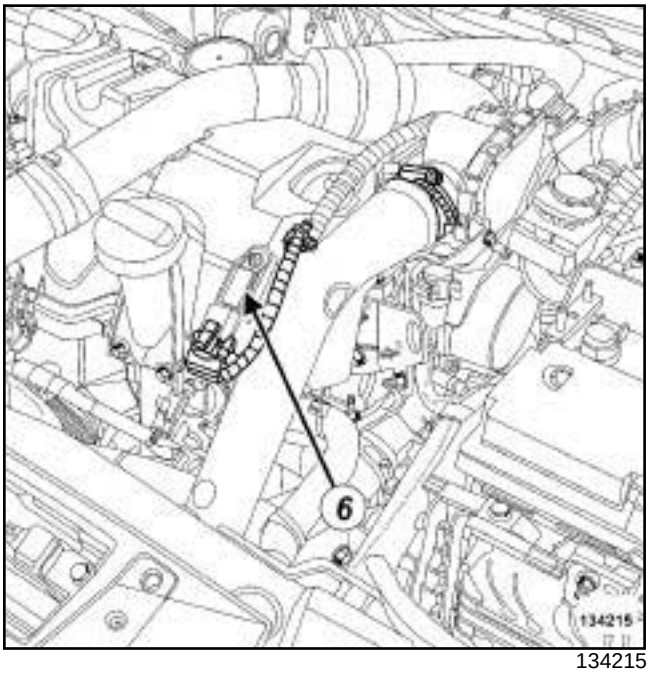

134215

(**6**) Turbocharging air pressure sensor

K9K, and 832

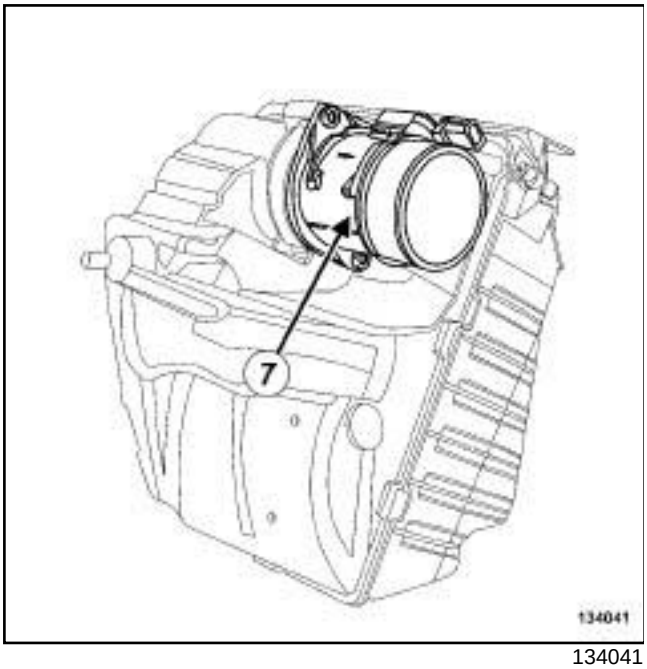

134041

(**7**) Air flowmeter

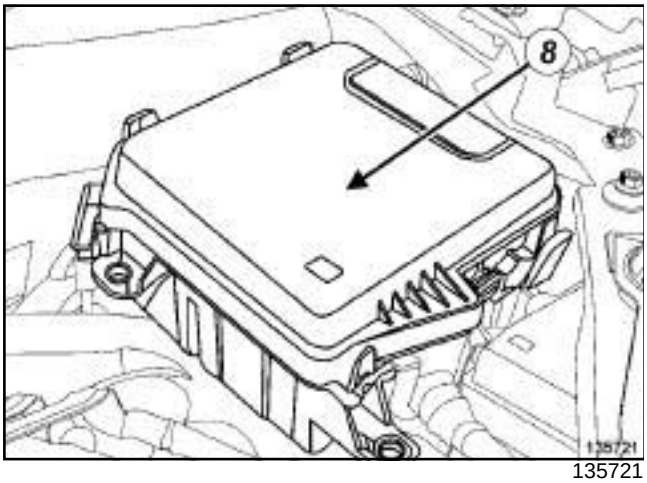

135721

(**8**) Protection and switching unit

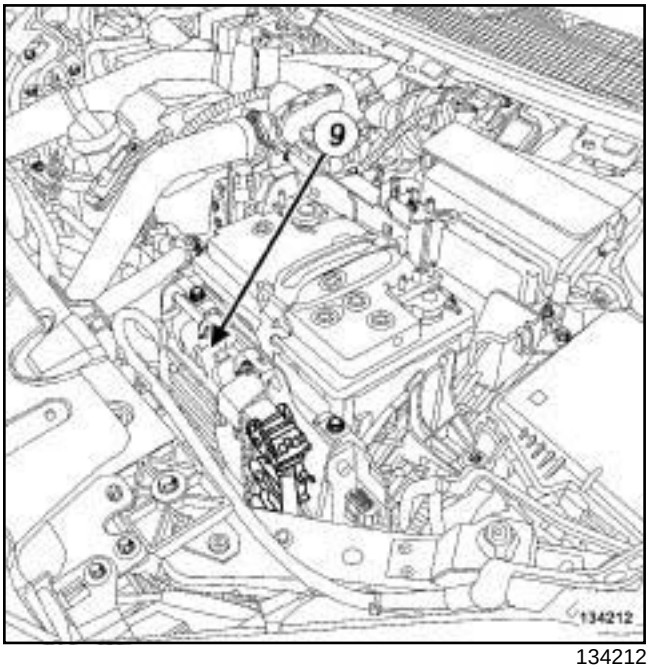

134212

(**9**) Injection computer

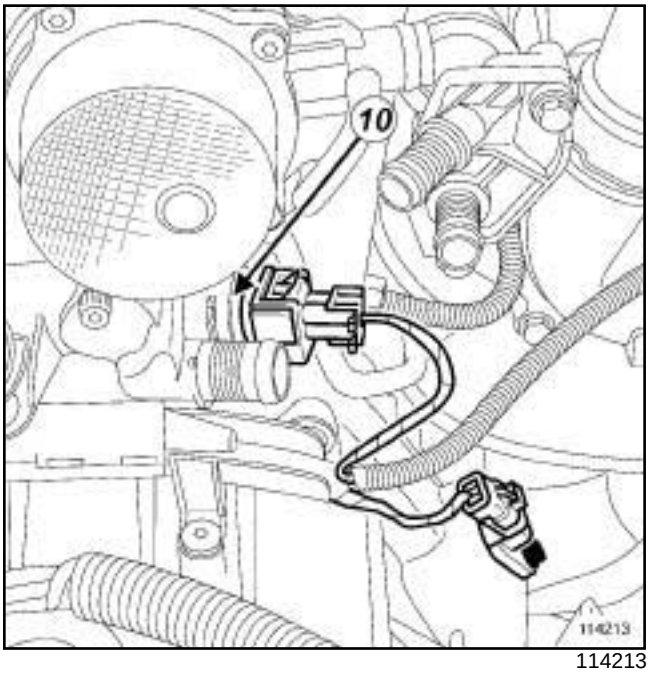

114213

(**10**) Coolant temperature sensor

K9K, and 832

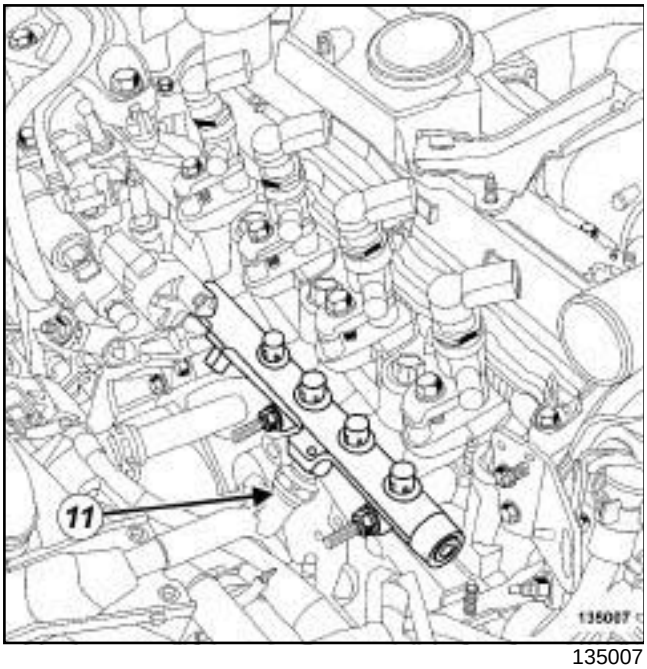

135007

(**11**) Rail pressure sensor

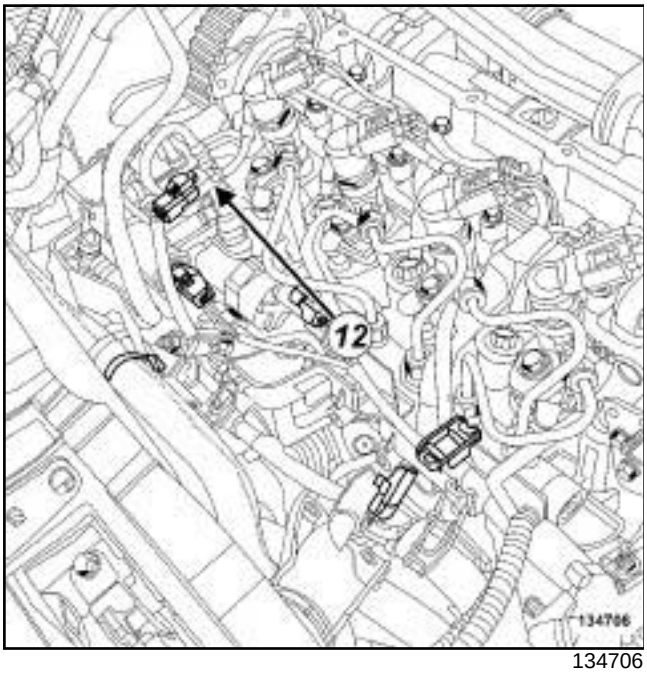

134706

(**12**) Fuel temperature sensor

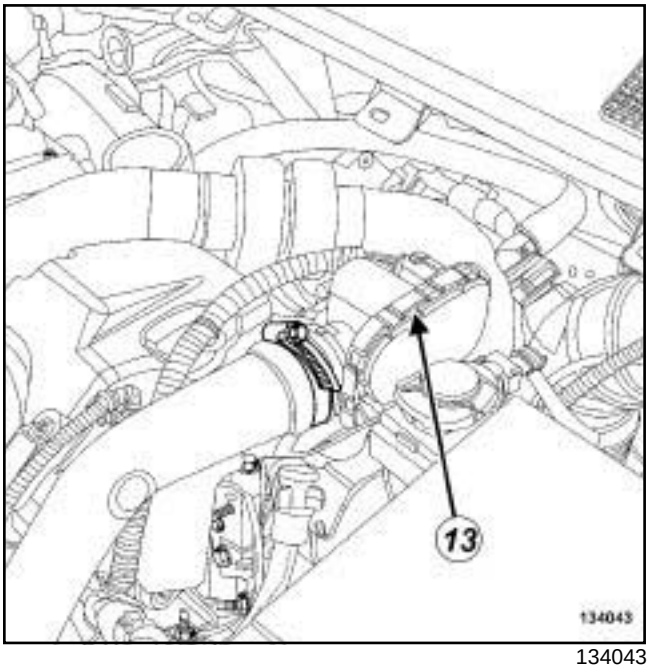

134043

(**13**) Air inlet valve

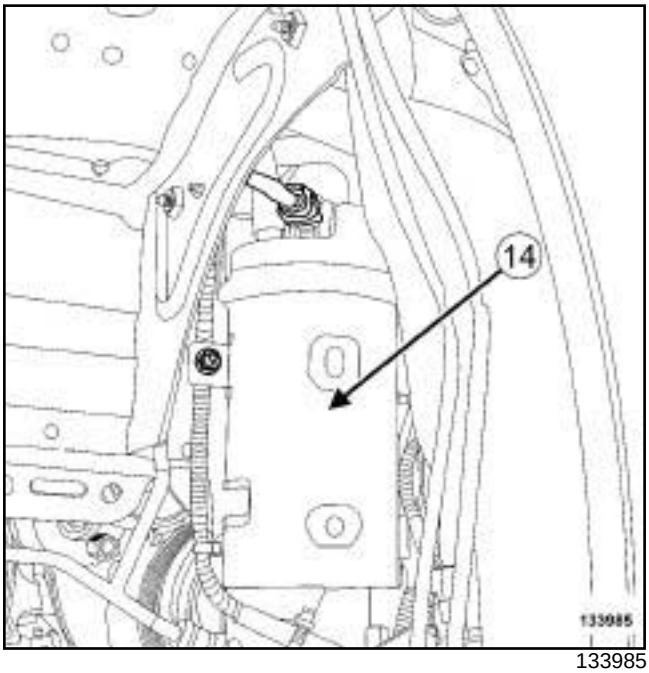

133985

(**14**) Fuel filter

K9K, and 832

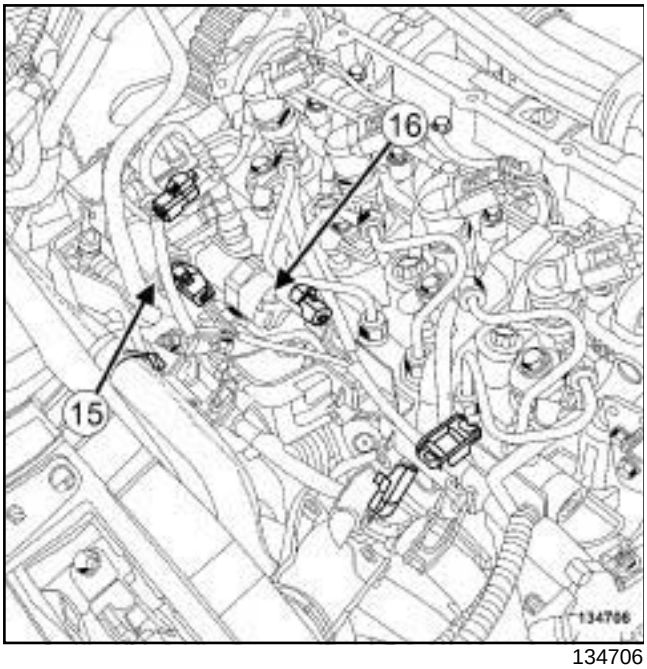

134706

(**15**) Flow regulation solenoid valve

(**16**) Pressure regulation solenoid valve

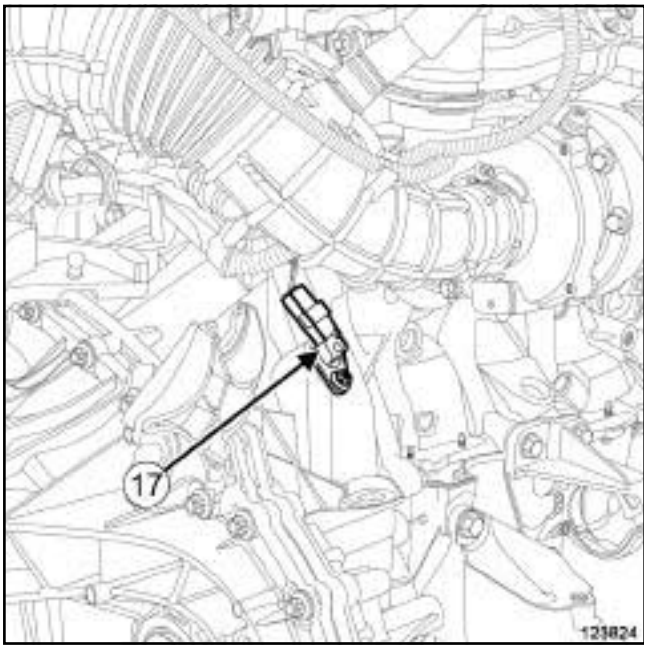

123824

(**17**) Crankshaft position sensor

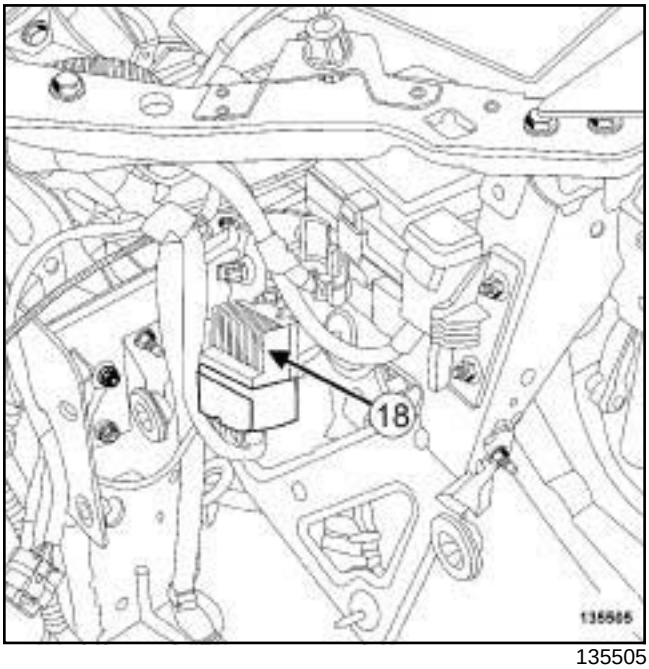

135505

(**18**) Pre-postheating unit

F9Q or K9K

Essential equipment
diagnostic tool

REMOVAL

I - REMOVAL PREPARATION OPERATION

❑ Disconnect the battery (see **Battery: Removal - Refitting**) (80A, Battery).

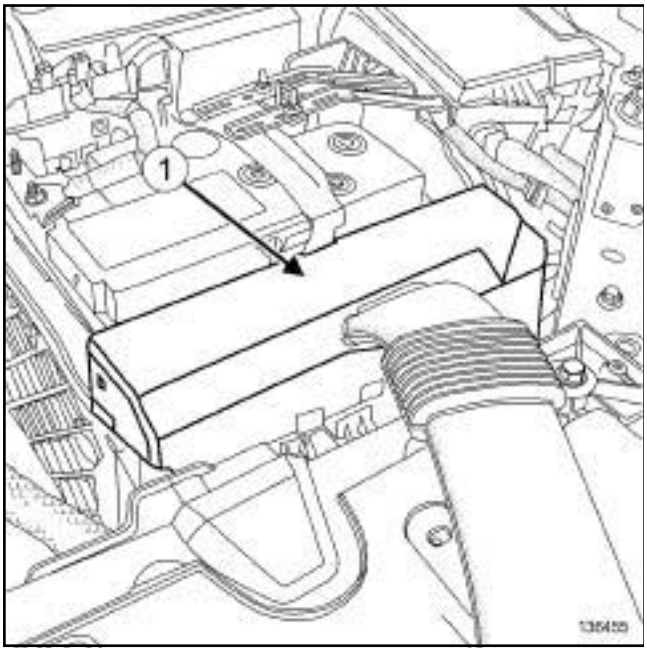

136455

❑ Remove the cover of the diesel injection computer (**1**) .

II - OPERATION FOR REMOVAL OF PART CONCERNED

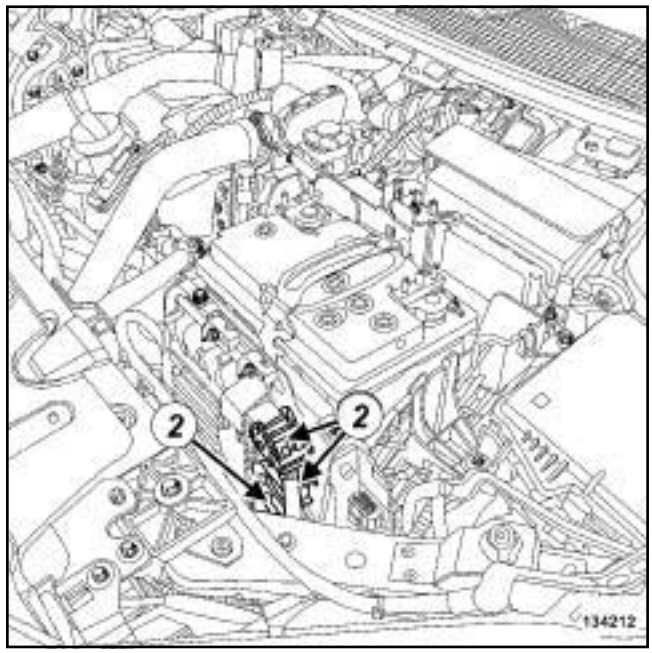

134212

❑ Disconnect the connectors (**2**) from the diesel injection computer.

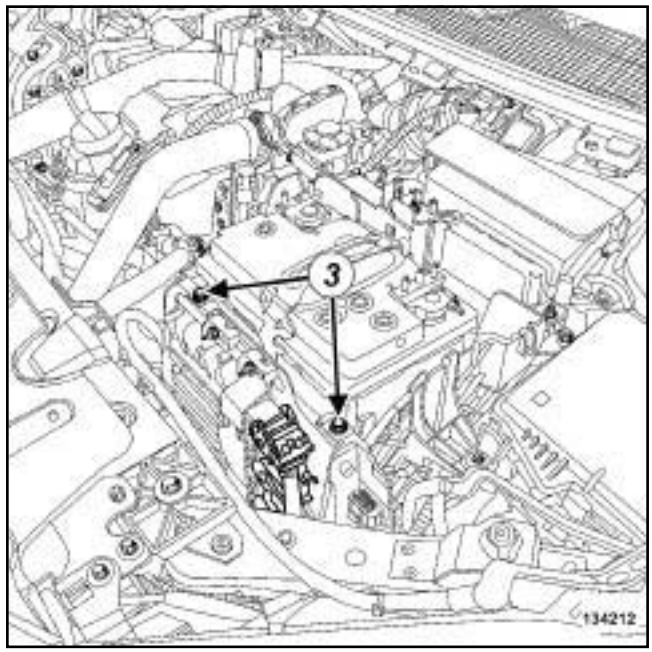

134212

❑ Remove:

- the diesel injection computer mounting bolts (**3**) ,
- the diesel injection computer mounting with the diesel injection computer.

F9Q or K9K

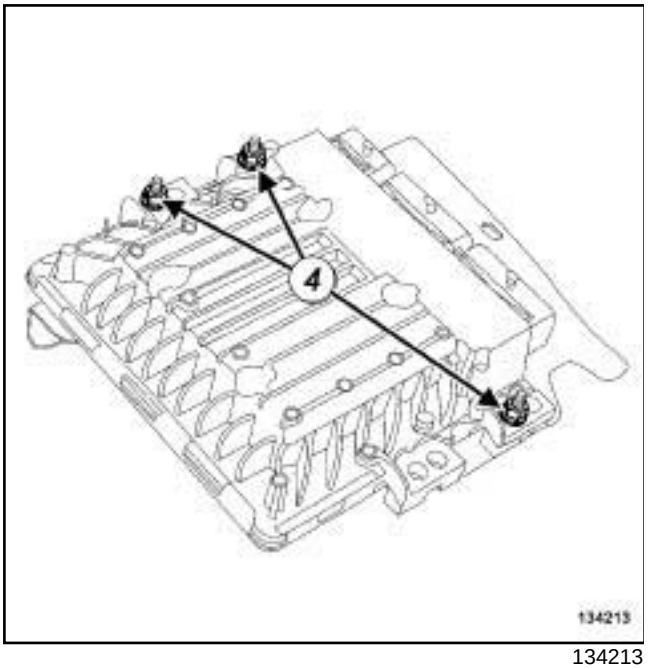

134213

❑ Remove:

- the diesel injection computer nuts (**4**) ,
- the diesel injection computer from the diesel injection computer mounting.

REFITTING

I - REFITTING OPERATION FOR PART CONCERNED

❑ Refit:

- the diesel injection computer on the diesel injection computer mounting,
- the diesel injection computer nuts on the diesel injection computer mounting.

❑ Fit the diesel injection computer mounting with the diesel injection computer.

❑ Refit the diesel injection computer mounting bolts.

❑ Connect the diesel injection computer connectors.

II - FINAL OPERATION

❑ Refit the diesel injection computer cover.

❑ Connect the battery (see **Battery : Removal - Refitting**) (80A, Battery).

❑ Apply the after repair procedure using the **diagnostic tool** :

- connect the **diagnostic tool**,
- select the « Diesel injection computer » ,
- go to repair mode,
- display the « After repair procedure » for the selected computer,
- carry out the operations described in the « After repair procedure » section.

K9K, and 832 or 834

Tightening torques ▽	
intercooler air outlet pipe clip on the damper valve	**5.5 N.m**

REMOVAL

I - REMOVAL PREPARATION OPERATION

❑ Remove the front engine cover.

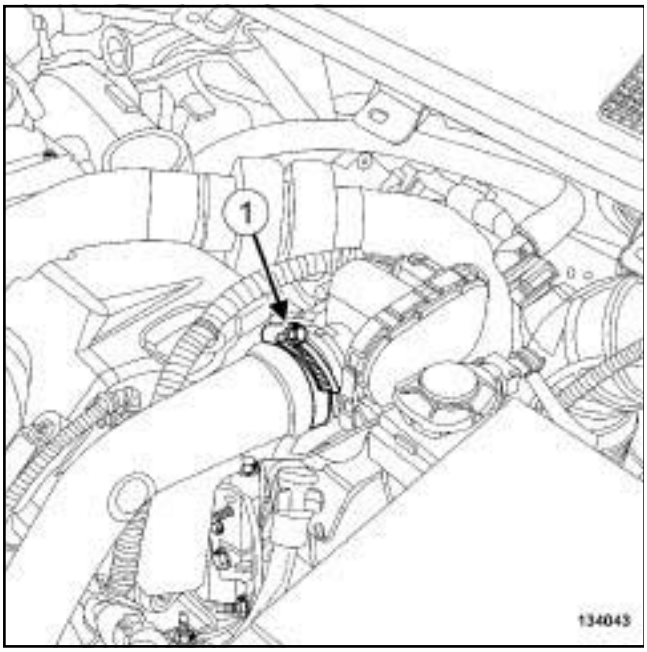

134043

❑ Separate the intercooler air outlet pipe clip (**1**) on the damper valve.

❑ Disconnect the intercooler air outlet pipe from the damper valve.

❑ Move the intercooler air outlet pipe slightly away from the damper valve.

II - OPERATION FOR REMOVAL OF PART CONCERNED

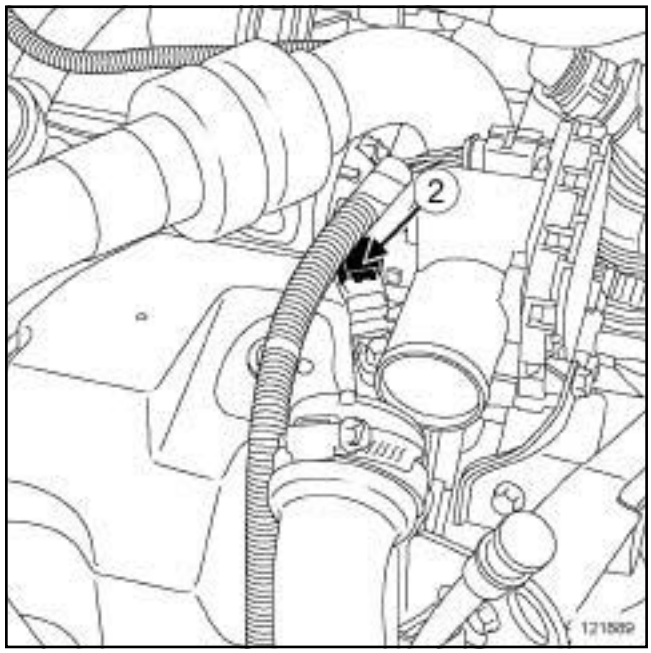

121889

❑ Disconnect the connector (**2**) from the camshaft position sensor.

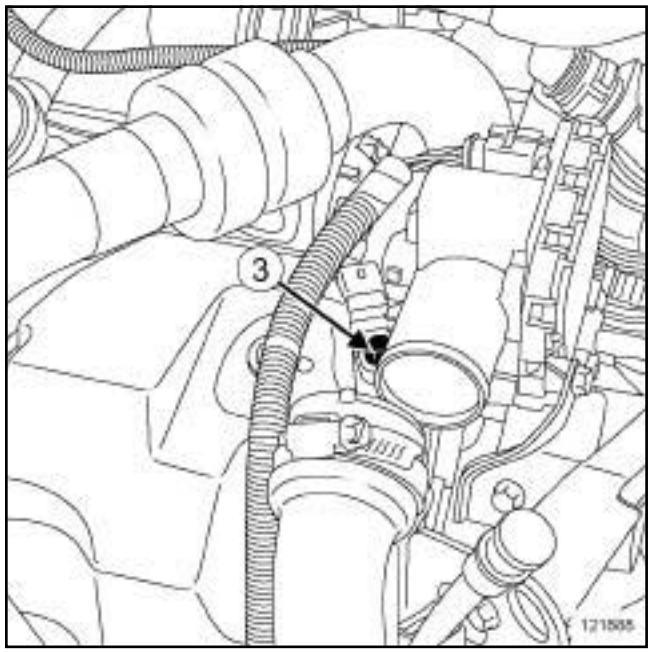

121888

❑ Remove:

- the bolt (**3**) from the camshaft position sensor,
- the camshaft position sensor,
- the camshaft position sensor seal.

K9K, and 832 or 834

REFITTING

I - REFITTING PREPARATION OPERATION

- **parts always to be replaced: camshaft sensor seal (11,11,04,02)**.
- Lubricate the camshaft position sensor seal with new engine oil.

II - REFITTING OPERATION FOR PART CONCERNED

- Refit:
  - the camshaft position sensor fitted with a new seal,
  - the camshaft position sensor bolt.
- Connect the camshaft position sensor connector.

III - FINAL OPERATION

- Fit the intercooler air outlet pipe.
- Connect the intercooler air outlet pipe on the damper valve.
- Torque tighten the **intercooler air outlet pipe clip on the damper valve (5.5 N.m)**.
- Refit the engine cover.

K9K, and 830

REMOVAL

I - REMOVAL PREPARATION OPERATION

❑ Position the vehicle on a two-post lift (see **Vehicle: Towing and lifting**) (02A, Lifting equipment).

❑ Remove:

- the engine cover,
- the engine undertray bolts,
- the engine undertray,
- the lower engine tie-bar (see **19D**, **Engine mounting**, **Lower engine tie-bar: Removal - Refitting**, page **19D-33**) ,
- the windscreen wiper arms (see **Windscreen wiper arm: Removal - Refitting**) (85A, Wiping - Washing),
- the scuttle panel grille (see **Scuttle panel grille: Removal - Refitting**) (56A, Exterior equipment),
- the scoop under the scuttle panel grille (see **Scoop under scuttle panel grille: Removal - Refitting**) (56A, Exterior equipment),
- the right-hand suspended engine mounting (see **19D**, **Engine mounting**, **Right-hand suspended engine mounting: Removal - Refitting**, page **19D-18**) .

II - OPERATION FOR REMOVAL OF PART CONCERNED

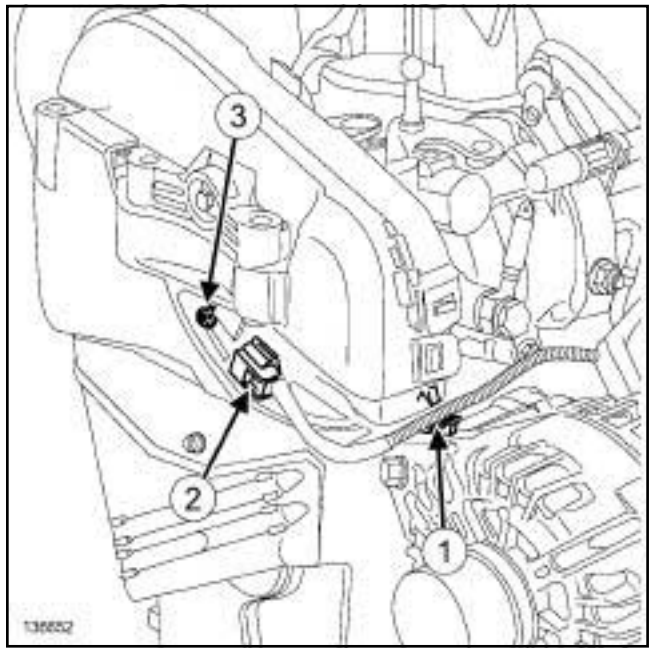

136652

❑ Unclip the camshaft position sensor wiring from the upper timing cover (**1**)

❑ Disconnect the connector (**2**) from the camshaft position sensor.

❑ Remove:

- the bolt (**3**) from the camshaft position sensor,
- the camshaft position sensor.

REFITTING

I - REFITTING PREPARATION OPERATION

❑ **parts always to be replaced: camshaft sensor seal (11,11,04,02)**.

❑ Lubricate the camshaft position sensor seal.

II - REFITTING OPERATION FOR PART CONCERNED

❑ Refit the camshaft position sensor fitted with a new seal.

❑ Connect the camshaft position sensor connector.

❑ Clip the wiring of the camshaft position sensor onto the upper timing cover.

K9K, and 830

III - FINAL OPERATION

❑ Refit:

- the right-hand suspended engine mounting (see **19D**, **Engine mounting**, **Right-hand suspended engine mounting: Removal - Refitting**, page **19D-18**) ,
- the scoop under the scuttle panel grille (see **Scoop under scuttle panel grille: Removal - Refitting**) (56A, Exterior equipment),
- the scuttle panel grille (see **Scuttle panel grille: Removal - Refitting**) (56A, Exterior equipment),
- the windscreen wiper arms (see **Windscreen wiper arm: Removal - Refitting**) (85A, Wiping - Washing),
- the lower engine tie-bar (see **19D**, **Engine mounting**, **Lower engine tie-bar: Removal - Refitting**, page **19D-33**) ,
- the engine undertray,
- the engine undertray bolts,
- the engine cover.

F9Q

Tightening torques ▽	
EGR bypass control solenoid valve bolts	**10 N.m**

REMOVAL

I - REMOVAL PREPARATION OPERATION

❑ Remove the front engine cover.

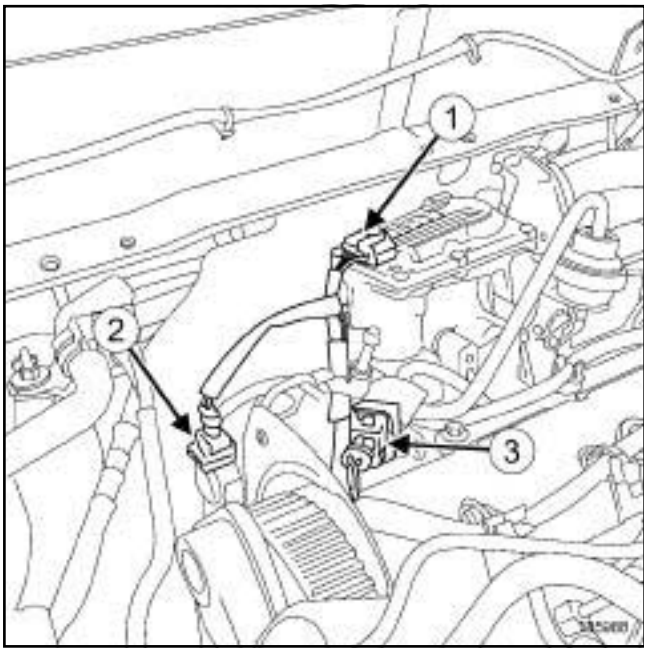

135988

❑ Disconnect:

- the connector (**1**) from the EGR solenoid valve,
- the connector (**2**) from the turbocharger control solenoid valve,
- the connector (**3**) from the EGR bypass control solenoid valve.

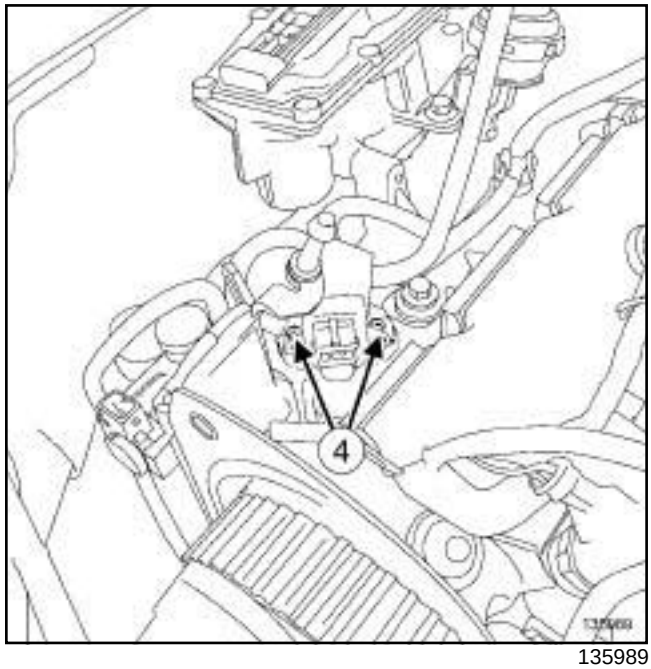

135989

❑ Remove the bolts (**4**) from the EGR bypass control solenoid valve.

❑ Move aside the EGR bypass control solenoid valve.

II - OPERATION FOR REMOVAL OF PART CONCERNED

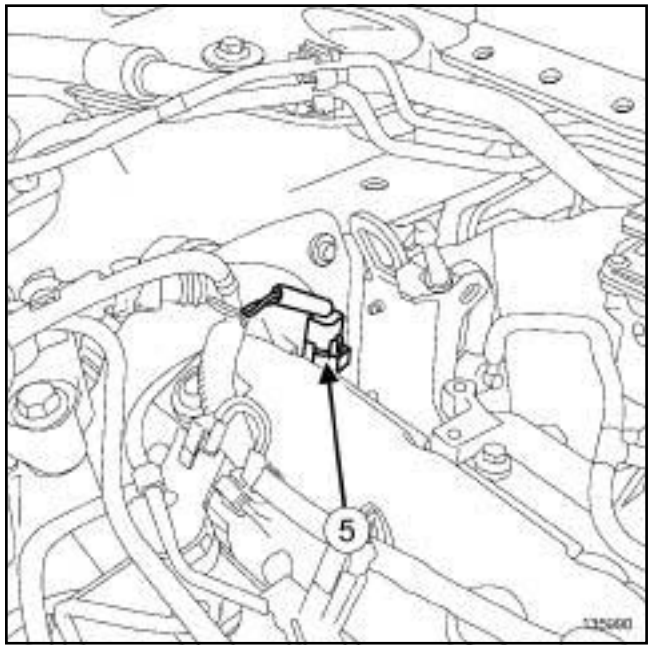

135990

❑ Disconnect the connector (**5**) from the camshaft position sensor.

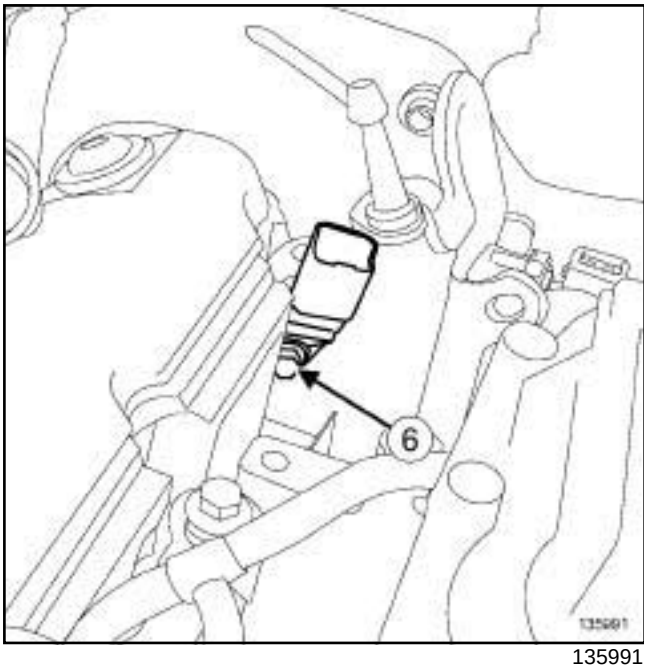

135991

❑ Remove:

- the bolt (**6**) from the camshaft position sensor,
- the camshaft position sensor.

REFITTING

I - REFITTING OPERATION FOR PART CONCERNED

❑ Refit the camshaft position sensor.

❑ Connect the camshaft position sensor connector.

II - FINAL OPERATION

❑ Refit the EGR bypass control solenoid valve.

❑ Torque tighten the **EGR bypass control solenoid valve bolts (10 N.m)**.

❑ Connect:

- the EGR bypass control solenoid valve connector,
- the turbocharger control solenoid valve connector,
- the EGR solenoid valve connector.

❑ Refit the engine cover.

K9K

REMOVAL

I - REMOVAL PREPARATION OPERATION

❑ Position the vehicle on a two-post lift (see **Vehicle: Towing and lifting**) (02A, Lifting equipment).

❑ Remove:

- the engine undertray bolts,
- the engine undertray.

II - OPERATION FOR REMOVAL OF PART CONCERNED

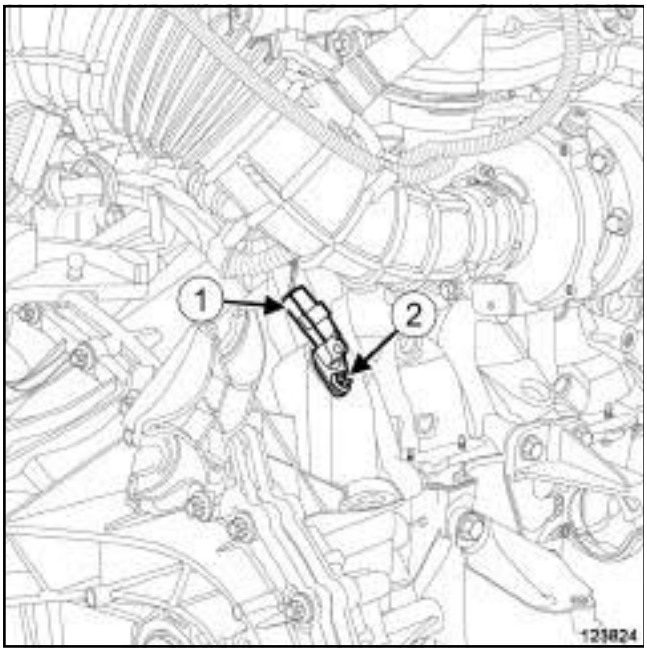

123824

❑ Disconnect the crankshaft position sensor connector (**1**) .

❑ Remove:

- the crankshaft position sensor bolt (**2**) ,
- the crankshaft position sensor.

REFITTING

I - REFITTING OPERATION FOR PART CONCERNED

❑ Refit:

- the crankshaft position sensor,
- the crankshaft position sensor bolt.

❑ Connect the crankshaft position sensor connector.

II - FINAL OPERATION

❑ Refit the engine undertray.

F9Q

REMOVAL

I - REMOVAL PREPARATION OPERATION

❏ Position the vehicle on a two-post lift (see **Vehicle: Towing and lifting**) (02A, Lifting equipment).

❏ Disconnect the battery (see **Battery: Removal - Refitting**) (80A, Battery).

❏ Remove:

- the engine undertray bolts,
- the engine undertray.

II - OPERATION FOR REMOVAL OF PART CONCERNED

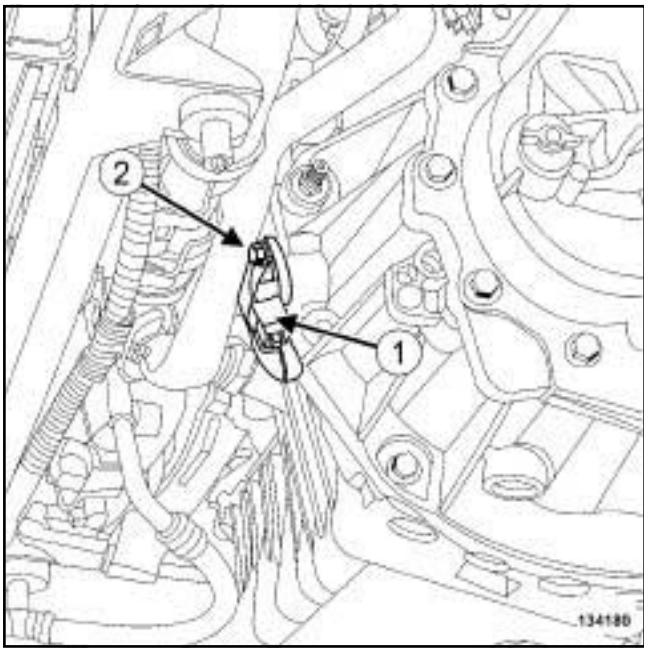

134180

❏ Disconnect the crankshaft position sensor connector (**1**) .

❏ Remove:

- the crankshaft position sensor bolt (**2**) ,
- the crankshaft position sensor.

REFITTING

I - REFITTING OPERATION FOR PART CONCERNED

❏ Refit the crankshaft position sensor.

❏ Connect the crankshaft position sensor connector.

II - FINAL OPERATION

❏ Refit the engine undertray.

❏ Connect the battery (see **Battery : Removal - Refitting**) (80A, Battery).

K9K, and 832

Essential special tooling	
Mot. 1771	Kit for measuring SIEMENS injector leak rate.

Essential equipment
graduated measuring cylinder
diagnostic tool

Tightening torques ▽	
intercooler air outlet pipe clip on the damper valve	**5.5 N.m**
intercooler air outlet pipe clip on the damper valve	**5.5 N.m**

CHECKING

I - PREPARATION OPERATION FOR CHECK

❑ Remove:

- the engine cover,
- the turbocharger air outlet pipe (see **12B**, **Turbocharging**, **Intercooler air inlet pipe: Removal - Refitting**, page **12B-41**) .

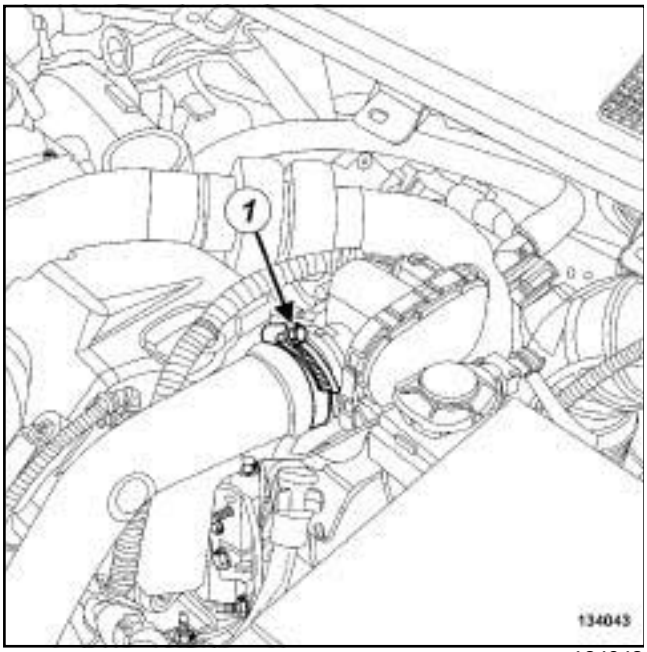

134043

❑ Separate the intercooler air outlet pipe clip (**1**) on the damper valve.

❑ Disconnect the intercooler air outlet pipe from the damper valve.

❑ Separate the intercooler air outlet pipe slightly from the damper valve.

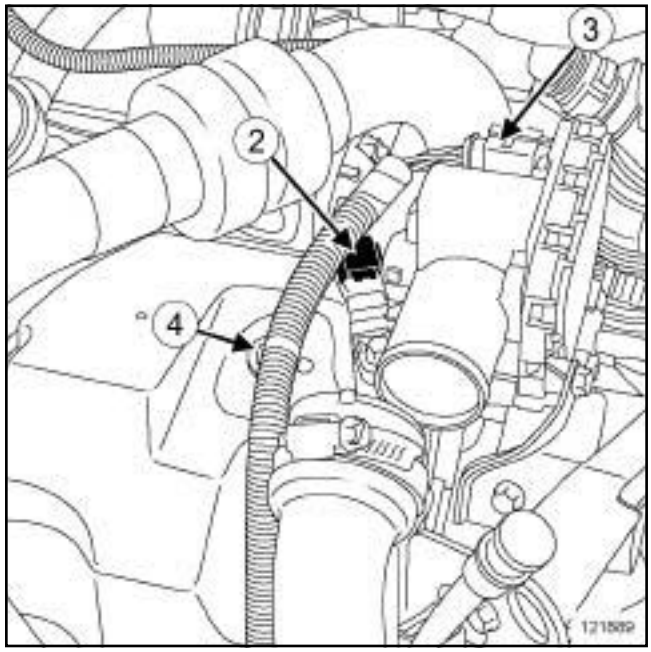

121889

❑ Disconnect:

- the connector (**2**) from the camshaft position sensor,
- the damper valve connector (**3**) .

❑ Unclip the camshaft position sensor wiring and the damper valve wiring (**4**) from the injector rail protector cover.

❑ Move aside the camshaft position sensor wiring and damper valve wiring.

K9K, and 832

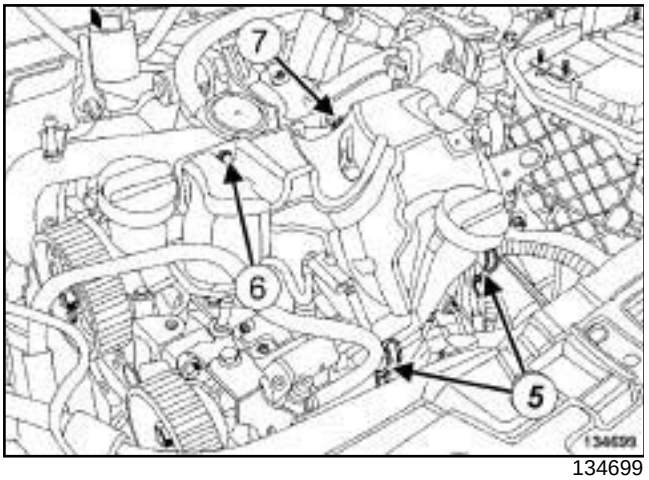

134699

❑ Unclip the injector rail protector cover at (**5**) .

❑ Remove:

- the injector rail protector cover bolt (**6**) ,
- the injector rail protector cover nut (**7**) ,
- the injection rail protector cover,

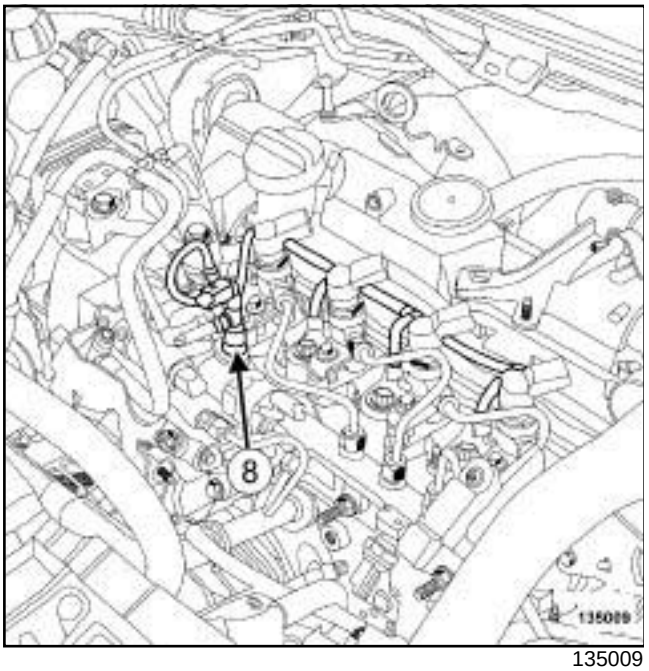

135009

❑ Disconnect the diesel injector fuel return rail (**8**) from the high pressure pump.

> **WARNING**
> To prevent impurities from entering the circuit, place protective plugs on all fuel circuit components exposed to the open air.

❑ Fit a blanking plug onto the opening of the diesel injector fuel return rail.

❑ Connect the **8 mm** diameter offset union fitted with its hose contained in the tool **(Mot. 1771)** to the high pressure pump union.

❑ Immerse this hose in the **500 ml graduated measuring cylinder**.

❑ Connect:

- the camshaft position sensor connector,
- the damper valve connector,
- the intercooler outlet air pipe on the damper valve.

❑ Torque tighten the **intercooler air outlet pipe clip on the damper valve (5.5 N.m)**.

❑ Refit the turbocharger air outlet pipe (see **12B**, **Turbocharging**, **Intercooler air inlet pipe: Removal - Refitting**, page **12B-41**) .

II - CHECKING OPERATION FOR PART CONCERNED

❑ Force the vehicle's + after ignition feed.

❑ Connect the **diagnostic tool**.

❑ Run commands:

- RZ009 "Program vehicle functions",
- VP036 "Inhibit fuel supply".

❑ Run the starter for **15 seconds**.

❑ Check that the minimum flow is **25 ml** for **15 seconds**.

❑ Run command VP037 "Stop fuel supply inhibition".

❑ Disconnect the **diagnostic tool**.

III - FINAL OPERATION

❑ Remove the turbocharger outlet air pipe (see **12B**, **Turbocharging**, **Intercooler air inlet pipe: Removal - Refitting**, page **12B-41**) .

❑ Separate the intercooler air outlet pipe clip on the damper valve.

❑ Disconnect:

- the intercooler air outlet pipe on the damper valve,
- the damper valve connector,
- the camshaft position sensor connector.

❑ Disconnect the **8 mm** diameter offset union fitted with its hose contained in the tool **(Mot. 1771)** on the high pressure pump union.

❑ Remove the blanking plug from the diesel injector fuel return rail opening.

K9K, and 832

- ❑ Connect the diesel injector fuel return rail to the high pressure pump.
- ❑ Refit:
  - the injector rail protector cover,
  - the injector rail protector cover nut,
  - the injector rail protector cover bolt.
- ❑ Clip on the injector rail protector cover.
- ❑ Fit the damper valve wiring.
- ❑ Clip the damper valve wiring onto the injector rail protector cover.
- ❑ Connect:
  - the camshaft position sensor connector,
  - the damper valve connector,
  - the intercooler outlet air pipe on the damper valve.
- ❑ Torque tighten the **intercooler air outlet pipe clip on the damper valve (5.5 N.m)**.
- ❑ Refit:
  - the turbocharger air outlet pipe (see **12B**, **Turbo-charging**, **Intercooler air inlet pipe: Removal - Refitting**, page **12B-41**) ,
  - the engine cover.

K9K, and 832

Essential special tooling	
Mot. 1768	Injection pump-pulley extractor claws.
Mot. 1525	Extractor for timing gear with tapered hub.

Essential equipment
offset spanner
diagnostic tool

Tightening torques ▽	
high pressure pump pulley nut	**70 N.m**
high pressure pump bolts	**23 N.m**
alternator lower bolt	**25 N.m**
alternator upper bolt	**25 N.m**

IMPORTANT
To avoid all risk of damage to the systems, apply the safety and cleanliness instructions and operation recommendations before carrying out any repair (see **13B**, **Diesel injection**, **Diesel injection: Precautions for repair**, page **13B-1**) .

REMOVAL

I - REMOVAL PREPARATION OPERATION

❑ Position the vehicle on a two-post lift (see **Vehicle: Towing and lifting**) (02A, Lifting equipment).

❑ Disconnect the battery (see **Battery: Removal - Refitting**) (80A, Battery).

❑ Remove:

- the engine cover,
- the front right-hand wheel (see **Wheel: Removal - Refitting**) (35A, Wheels and tyres),
- the front section of the front right-hand wheel arch liner (see **Front wheel arch liner: Removal - Refitting**) (55A, Exterior protection),
- the engine undertray bolts,
- the engine undertray,
- the accessories belt (see **11A**, **Top and front of engine**, **Accessories belt: Removal - Refitting**, page **11A-7**) ,
- the crankshaft accessories pulley (see **11A**, **Top and front of engine**, **Crankshaft accessories pulley: Removal - Refitting**, page **11A-15**) ,
- the windscreen wiper arms (see **Windscreen wiper arm: Removal - Refitting**) (85A, Wiping - Washing),
- the scuttle panel grille (see **Scuttle panel grille: Removal - Refitting**) (56A, Exterior equipment),
- the scoop under the scuttle panel grille (see **Scoop under scuttle panel grille: Removal - Refitting**) (56A, Exterior equipment),
- the right-hand suspended engine mounting (see **19D**, **Engine mounting**, **Right-hand suspended engine mounting: Removal - Refitting**, page **19D-18**) ,
- the timing belt (see **11A**, **Top and front of engine**, **Timing belt: Removal - Refitting**, page **11A-29**) .

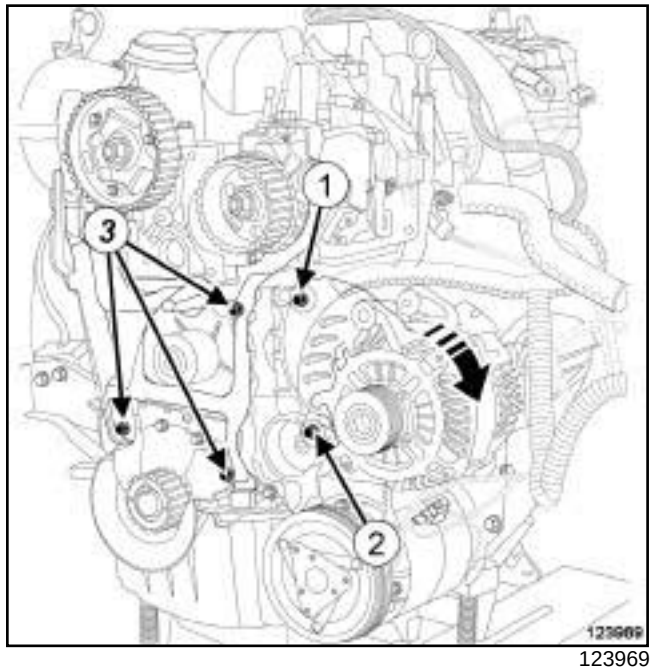

123969

❑ Remove the alternator upper bolt (**1**) .

❑ Loosen the alternator lower bolt (**2**) .

❑ Tilt the alternator slightly towards the front of the vehicle.

❑ Remove:

- the inner cover bolts (**3**) ,
- the inner cover,

K9K, and 832

- the turbocharger air outlet pipe (see **12B**, **Turbocharging**, **Intercooler air inlet pipe: Removal - Refitting**, page **12B-41**) ,
- the high pressure pipe between the high pressure pump and the injector rail (see **13B**, **Diesel injection**, **High-pressure pipe between the pump and rail: Removal - Refitting**, page **13B-71**) .

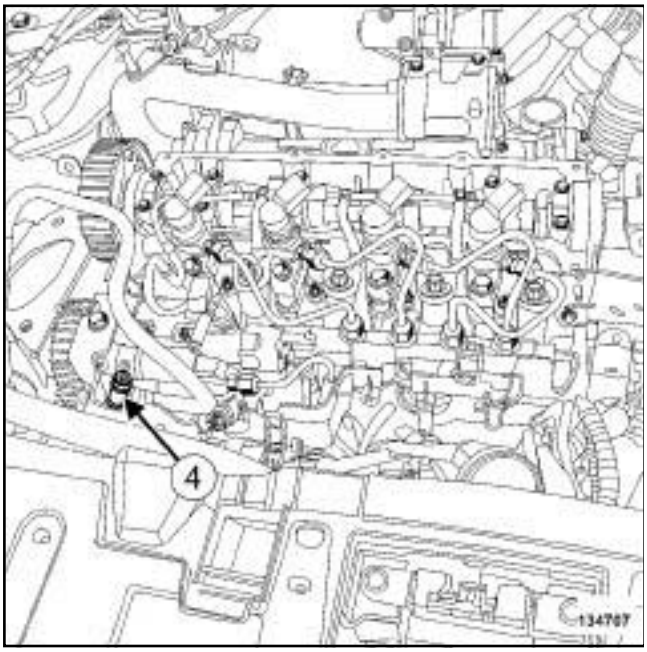

134707

❑ Disconnect the fuel supply pipe from the high pressure pump (**4**) .

❑ Fit a suitable blanking plug on the opening of:

- the fuel supply pipe,
- the high pressure pump.

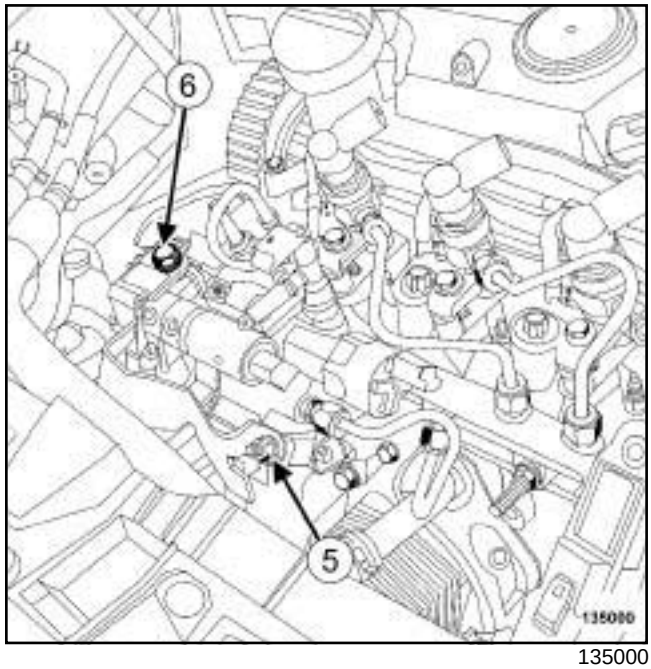

135000

❑ Remove:

- the high pressure pump protector nut (**5**) ,
- the high pressure pump protector bolt (**6**) ,
- the high pressure pump protector.

WARNING
To avoid any corrosion or damage, protect the areas on which fuel is likely to run.

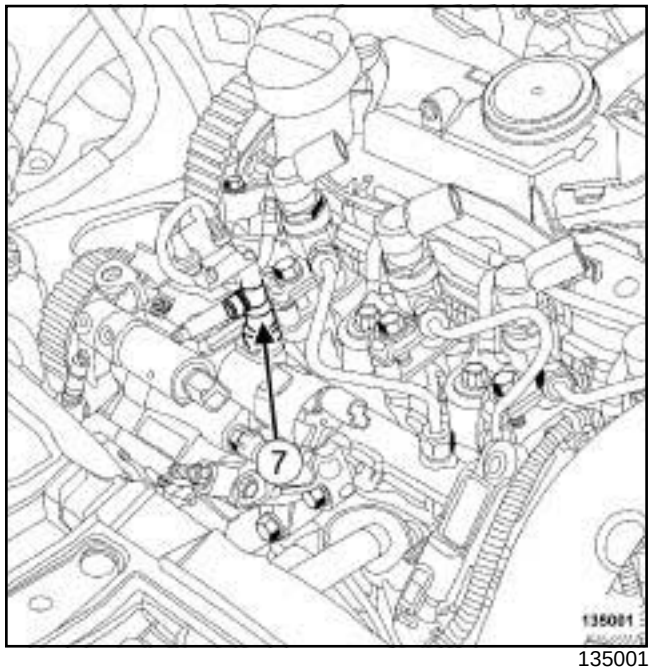

135001

❑ Disconnect the diesel injector fuel return rail union (**7**) from the high pressure pump.

K9K, and 832

❑ Fit a suitable blanking plug on the opening of:

- the diesel injector fuel return rail union,
- the high pressure pump.

II - OPERATION FOR REMOVAL OF PART CONCERNED

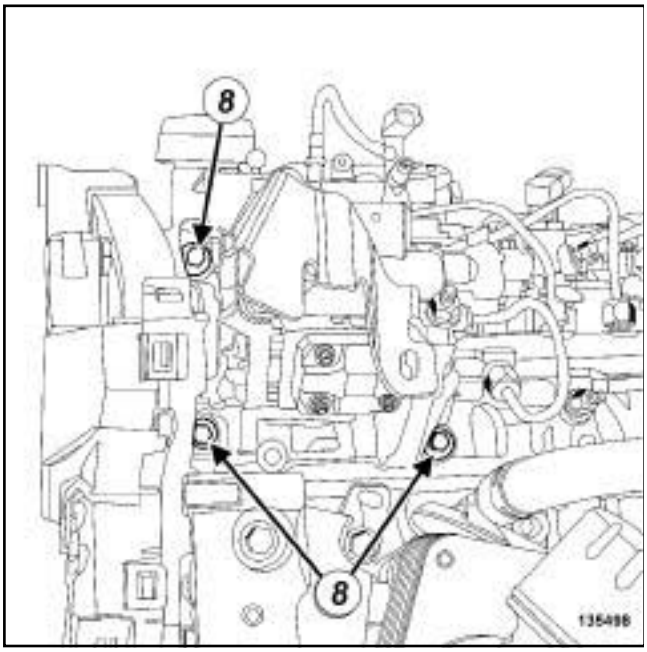

135498

❑ Remove:

- the high pressure pump bolts (**8**) ,
- the high pressure pump.

REFITTING

I - REFITTING PREPARATION OPERATION

If replacing the high pressure pump

a - Remove the high pressure pump pulley

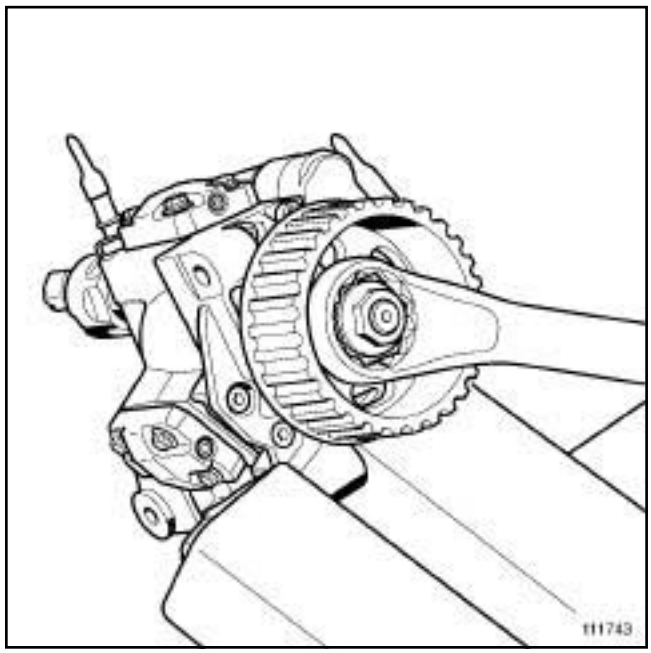

111743

❑

> Note:
>
> If the high pressure pump is replaced, retain the high pressure pump pulley and refit it to the new high pressure pump.

❑ Hold the high pressure pump in a vice with jaws, by the lower mounting on the pulley side.

❑ Immobilise the high pressure pump pulley using a **32 mm offset spanner**.

❑ Remove the nut from the high-pressure pump pulley.

K9K, and 832

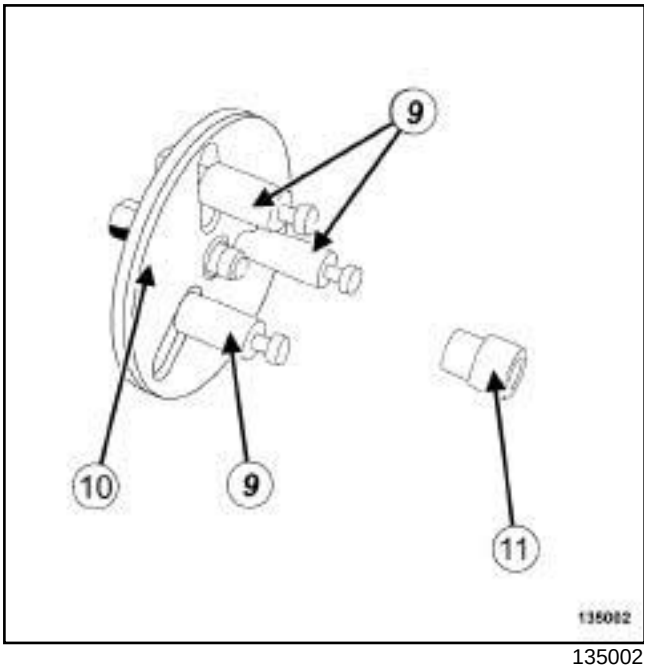

135002

❑ Fit tool **(Mot. 1768)** (**9**) on the tool **(Mot. 1525)** (**10**) .

❑ Remove the end piece (**11**) from the tool **(Mot. 1525)** (**10**) .

❑ Fit the **(Mot. 1525)** equipped with the **(Mot. 1768)** to extract the high pressure pump pulley.

> Note:
>
> Be sure not to mark the high pressure pump pulley when extracting it using the **(Mot. 1525)** equipped with the **(Mot. 1768)**.

❑ Protect the contact zones between the **(Mot. 1525)** and **(Mot. 1768)** and the high pressure pump pulley.

❑ Extract the high pressure pump pulley.

❑ A damaged high pressure pump pulley must always be replaced.

b - Refitting the high pressure pump pulley

❑ Place the new high pressure pump in a vice with jaws, securing it at the lower mounting on the high pressure pump pulley side.

❑ Refit the high pressure pump pulley.

❑ Immobilise the high pressure pump pulley using a **32 mm offset spanner**.

❑ Torque tighten the **high pressure pump pulley nut (70 N.m)**.

II - REFITTING OPERATION FOR PART CONCERNED

❑ Refit the high pressure pump.

❑ Torque tighten the **high pressure pump bolts (23 N.m)**.

III - FINAL OPERATION

❑ Remove the blanking plugs from the opening of:

- the high pressure pump,
- the diesel injector fuel return rail union.

❑ Connect the diesel injector fuel return rail union on the high pressure pump.

❑ Refit the high pressure pump protector.

❑ Remove the blanking plugs from:

- the fuel supply pipe,
- the high pressure pump.

❑ Connect the fuel supply pipe to the high pressure pump.

❑ Refit:

- the high pressure pipe between the high pressure pump and the injector rail (see **13B**, **Diesel injection**, **High-pressure pipe between the pump and rail: Removal - Refitting**, page **13B-71**) ,
- the turbocharger air outlet pipe (see **12B**, **Turbocharging**, **Intercooler air inlet pipe: Removal - Refitting**, page **12B-41**) ,
- the inner cover.

❑ Fit the alternator in place.

❑ Refit the alternator upper bolt.

❑ Tighten to torque:

- the **alternator lower bolt (25 N.m)**,
- the **alternator upper bolt (25 N.m)**.

❑ Refit:

- the timing belt (see **11A**, **Top and front of engine**, **Timing belt: Removal - Refitting**, page **11A-29**) ,
- the crankshaft accessories pulley (see **11A**, **Top and front of engine**, **Crankshaft accessories pulley: Removal - Refitting**, page **11A-15**) ,
- the right-hand suspended engine mounting (see **19D**, **Engine mounting**, **Right-hand suspended engine mounting: Removal - Refitting**, page **19D-18**) ,
- the scoop under the scuttle panel grille (see **Scoop under scuttle panel grille: Removal - Refitting**) (56A, Exterior equipment),

K9K, and 832

- the scuttle panel grille (see **Scuttle panel grille: Removal - Refitting**) (56A, Exterior equipment),
- the windscreen wiper arms (see **Windscreen wiper arm: Removal - Refitting**) (85A, Wiping - Washing),
- the engine undertray,
- the accessories belt (see **11A**, **Top and front of engine**, **Accessories belt: Removal - Refitting**, page **11A-7**) ,
- the front section of the front right-hand wheel arch liner (see **Front wheel arch liner: Removal - Refitting**) (55A, Exterior protection),
- the front right-hand wheel (see **Wheel: Removal - Refitting**) (35A, Wheels and tyres).

❏ Connect the battery (see **Battery : Removal - Refitting**) (80A, Battery).

❏ Refit the engine cover.

❏ Reprime the fuel circuit using the manual priming pump.

❏ Check that there are no diesel leaks.

❏ Apply the after repair procedure using the **diagnostic tool** :

- connect the **diagnostic tool**,
- select "Injection computer",
- go to repair mode,
- display the "After repair procedure" for the selected computer,
- select "High pressure pump" in the "List of components stored by this computer" section,
- carry out the operations described in the "After repair procedure" section.

K9K, and 830

Essential special tooling	
Mot. 1430	Set of 5 crankshaft and camshaft pulley timing pins.
Mot. 1606	High pressure pump-pulley retaining tool.
Mot. 1525	Extractor for timing gear with tapered hub.
Mot. 1525-02	Adapter sockets for Mot.1525.

Essential equipment
diagnostic tool

Tightening torques ▽	
the high pressure pump bolts	**23 N.m**
high pressure pump pulley nut	**70 N.m**
right-hand suspended engine mounting support bolts	**25 N.m**

IMPORTANT
Wear leaktight gloves (Nitrile type) for this operation.

IMPORTANT
To avoid all risk of damage to the systems, apply the safety and cleanliness instructions and operation recommendations before carrying out any repair (see **13B**, **Diesel injection**, **Diesel injection: Precautions for repair**, page **13B-1**) .

REMOVAL

I - REMOVAL PREPARATION OPERATION

❑ Position the vehicle on a two-post lift (see **Vehicle: Towing and lifting**) (02A, Lifting equipment).

❑ Disconnect the battery (see **Battery: Removal - Refitting**) (80A, Battery).

❑ Remove:

- the engine cover,
- the front right-hand wheel (see **Wheel: Removal - Refitting**) (35A, Wheels and tyres),
- the front section of the front right-hand wheel arch liner (see **Front wheel arch liner: Removal - Refitting**) (55A, Exterior protection),
- the engine undertray bolts,
- the engine undertray,
- the accessories belt (see **11A**, **Top and front of engine**, **Accessories belt: Removal - Refitting**, page **11A-7**) ,
- the crankshaft accessories pulley (see **11A**, **Top and front of engine**, **Crankshaft accessories pulley: Removal - Refitting**, page **11A-15**) ,
- the lower engine tie-bar (see **19D**, **Engine mounting**, **Lower engine tie-bar: Removal - Refitting**, page **19D-33**) ,
- the windscreen wiper arms (see **Windscreen wiper arm: Removal - Refitting**) (85A, Wiping - Washing),
- the scuttle panel grille (see **Scuttle panel grille: Removal - Refitting**) (56A, Exterior equipment),
- the scoop under the scuttle panel grille (see **Scoop under scuttle panel grille: Removal - Refitting**) (56A, Exterior equipment),
- the right-hand suspended engine mounting (see **19D**, **Engine mounting**, **Right-hand suspended engine mounting: Removal - Refitting**, page **19D-18**) ,
- the camshaft position sensor (see **13B**, **Diesel injection**, **Camshaft position sensor: Removal - Refitting**, page **13B-19**) .
- the turbocharger air outlet pipe (see **12B**, **Turbocharging**, **Intercooler air inlet pipe: Removal - Refitting**, page **12B-41**) .
- the high pressure pipe between the high pressure pump and the injector rail (see **13B**, **Diesel injection**, **High-pressure pipe between the pump and rail: Removal - Refitting**, page **13B-71**) .

K9K, and 830

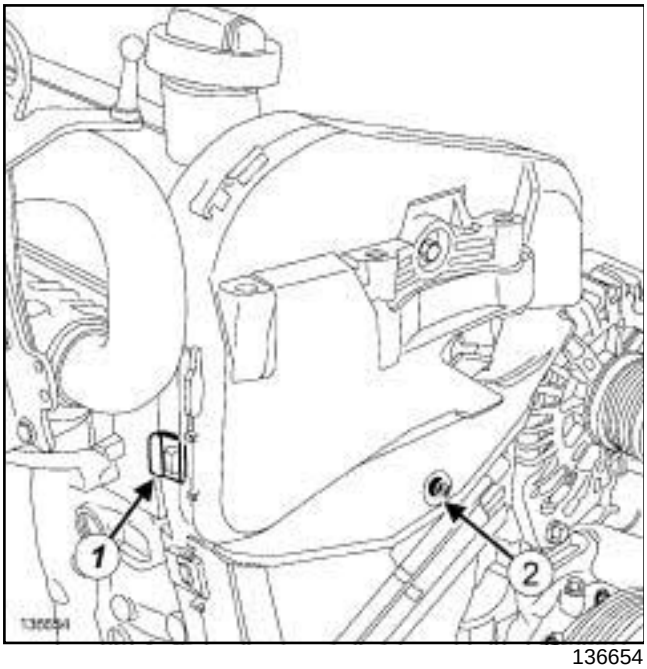

136654

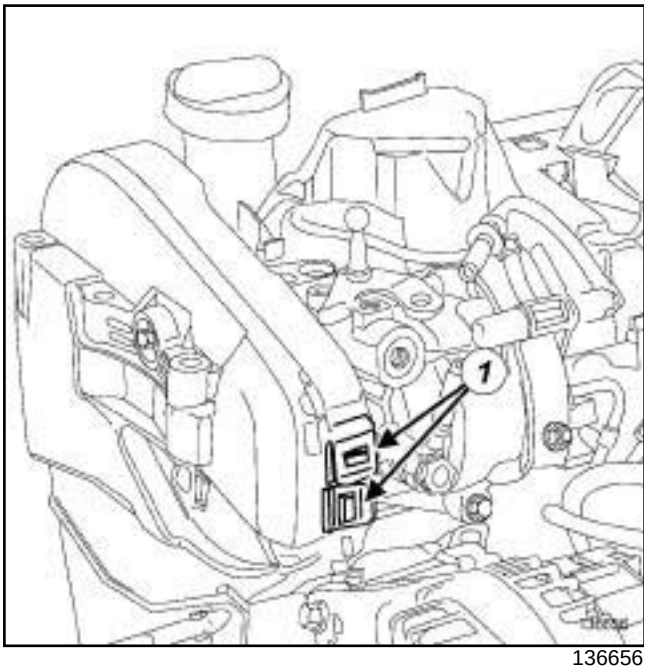

136656

❑ Unclip the upper timing cover at (**1**) .

❑ Remove:

- the bolt (**2**) from the upper timing cover,
- the upper timing cover.

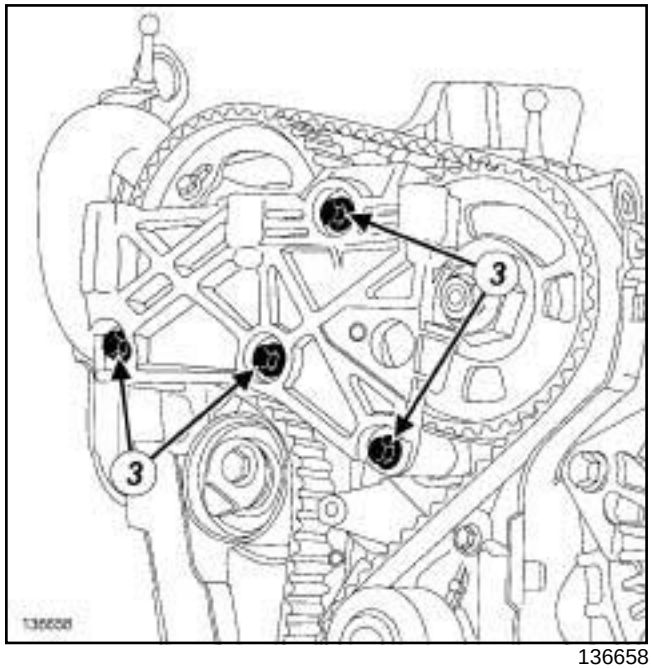

136658

❑ Remove:

- the right-hand suspended engine mounting support bolts (**3**) ,
- the right-hand pendulum suspension support.

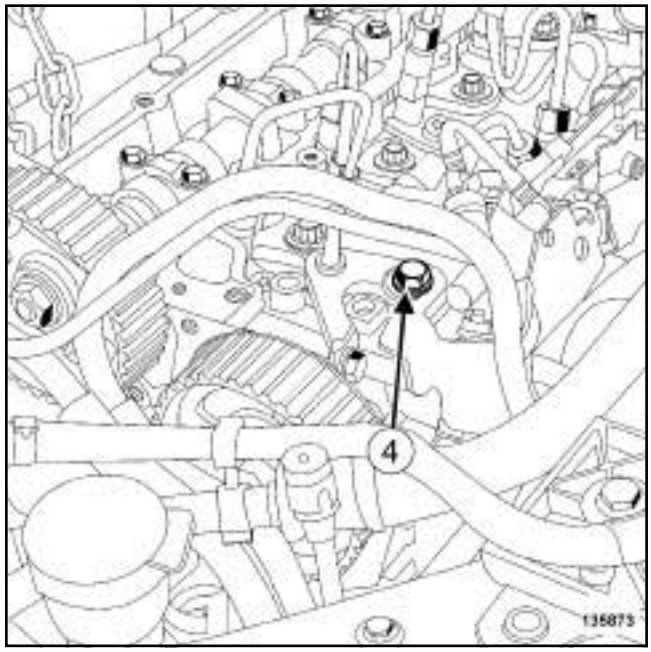

135873

❑ Remove:

- the bolt (**4**) from the high pressure pump protector,
- the high pressure pump protector.

❑ Clean the fuel supply unions on the high pressure pump (see **13B**, **Diesel injection**, **Diesel injection: Precautions for repair**, page **13B-1**) .

K9K, and 830

❑

WARNING
To avoid any corrosion or damage, protect the areas on which fuel is likely to run.

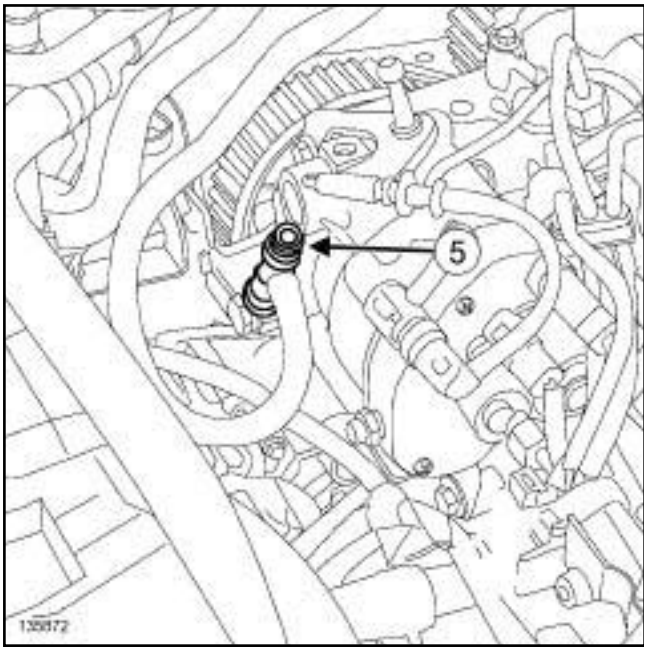

135872

❑ Disconnect the fuel supply pipe union from the high pressure pump (**5**) .

❑ Fit suitable blanking plugs on:

- the high pressure pump opening,
- the fuel supply pipe opening.

❑ Clean the fuel return unions on the high pressure pump (see **13B**, **Diesel injection**, **Diesel injection: Precautions for repair**, page **13B-1**) .

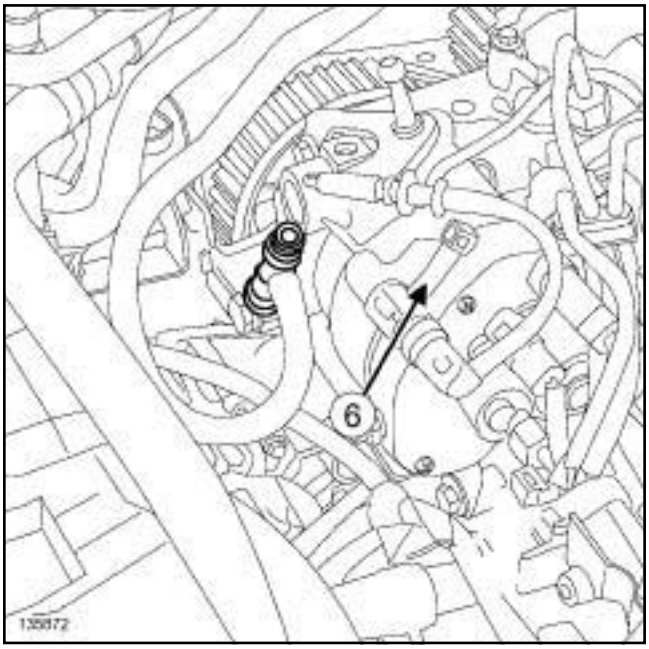

135872

❑ Disconnect the diesel injector fuel return rail from the high pressure pump (**6**) .

❑ Fit suitable blanking plugs on:

- the high pressure pump opening,
- the diesel injector fuel return rail opening.

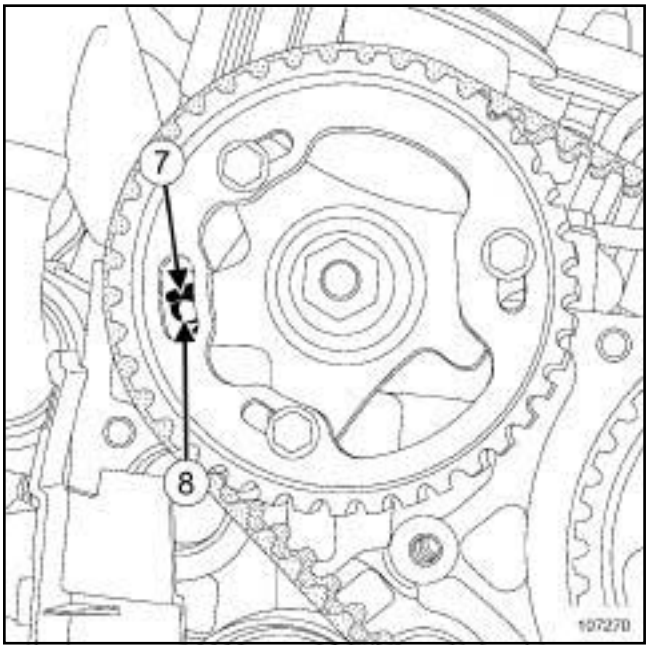

107270

❑ Position the engine at Top Dead Centre. The camshaft pulley hole (**7**) should be opposite the cylinder head hole (**8**) .

K9K, and 830

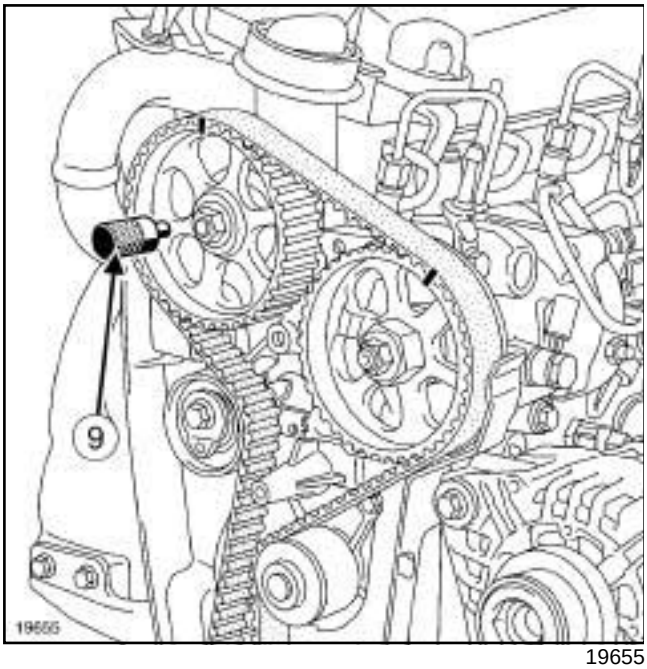

19655

- Insert the tool **(Mot. 1430)** (**9**) in the hole of the camshaft pulley hub and the hole of the cylinder head.
- Remove the tool **(Mot. 1430)**.

II - OPERATION FOR REMOVAL OF PART CONCERNED

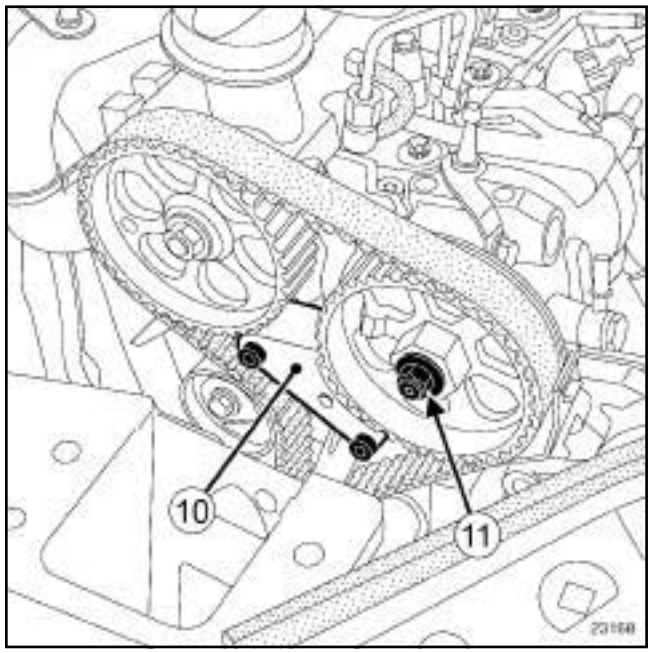

23168

- Fit the **(Mot. 1606)** (**10**) on the cylinder head.

> Note:
>
> If necessary, turn the engine slowly to adjust the position of the **(Mot. 1606)** on the high pressure pump pulley teeth.

- Immobilise the high pressure pump pulley using a **32 mm** spanner and then remove the nut (**11**) of the high pressure pump pulley.

K9K, and 830

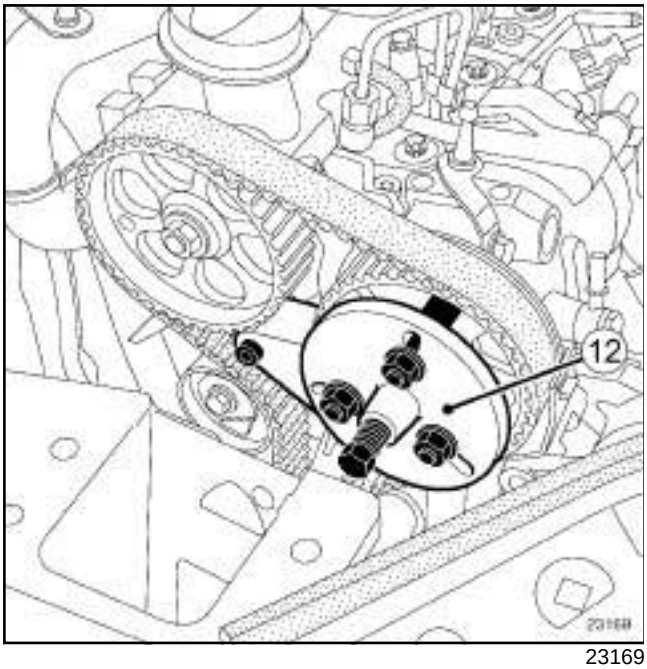

23169

❑

> Note:
>
> If necessary, remove the spacer at the end pushrod of the **(Mot. 1525)** to improve the positioning.

❑ Fit the tool **(Mot. 1525)** (**12**) fitted with the tool **(Mot. 1525-02)** on the high pressure pump pulley.

❑ Screw the pushrod of the tool **(Mot. 1525)** until it makes contact with the high pressure pump shaft.

> Note:
>
> Check that the pushrod of the tool **(Mot. 1525)** is correctly oriented and is pressing against the high pressure pump shaft. Adjust the tool **(Mot. 1525)** if necessary.

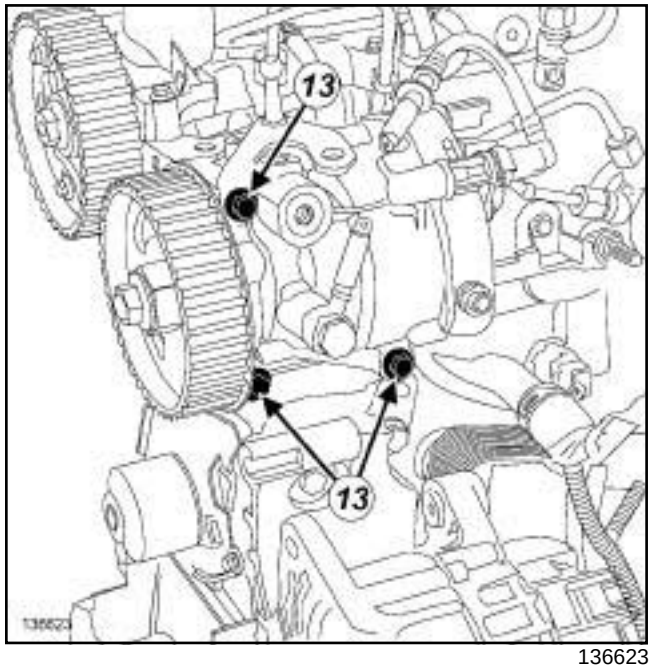

136623

❑ Remove the high pressure pump bolts (**13**) .

❑ Gradually screw the pushrod of the **(Mot. 1525)** until the high pressure pump becomes detached.

> Note:
>
> Guide and support the high pressure pump with one hand as it is being removed using the **(Mot. 1525)**

❑ Remove the high pressure pump.

> Note:
>
> If the high pressure pump is being reused, keep it in a sealed bag during the removal operation.

❑ Remove the tool **(Mot. 1525)** equipped with the tool **(Mot. 1525-02)** from the high pressure pump pulley.

REFITTING

I - REFITTING PREPARATION OPERATION

❑ Check for an index pin on the high pressure pump shaft.

K9K, and 830

II - REFITTING OPERATION FOR PART CONCERNED

❑ Refit the high pressure pump on the cylinder head by inserting it into the high pressure pump pulley.

> Note:
>
> Check that the high pressure pump shaft is correctly orientated in relation to the high pressure pump pulley.

❑ Fit the high pressure pump bolts without tightening them.

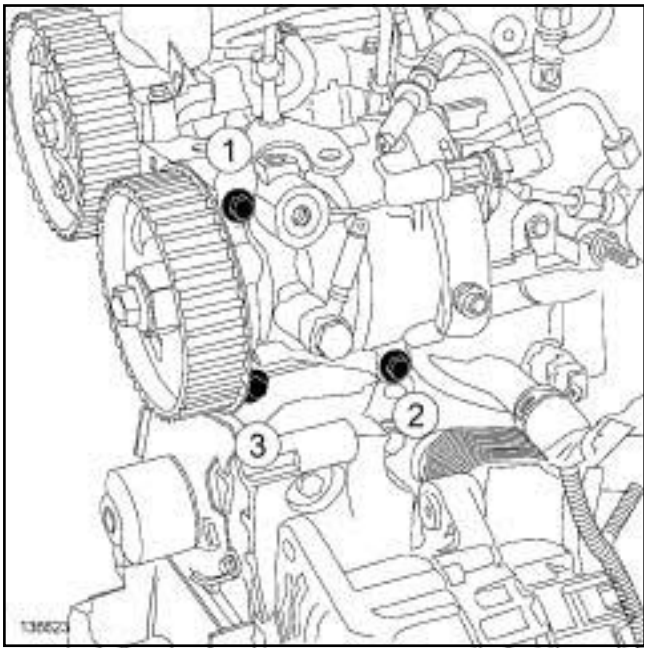

136623

❑ Torque tighten in order **the high pressure pump bolts (23 N.m)**.

❑ Torque tighten the **high pressure pump pulley nut (70 N.m)** while holding the high pressure pump pulley using a **32 mm** spanner.

> Note:
>
> Check that the timing belt is correctly positioned and in good condition.

❑ Remove the **(Mot. 1606)** from the cylinder head.

III - FINAL OPERATION

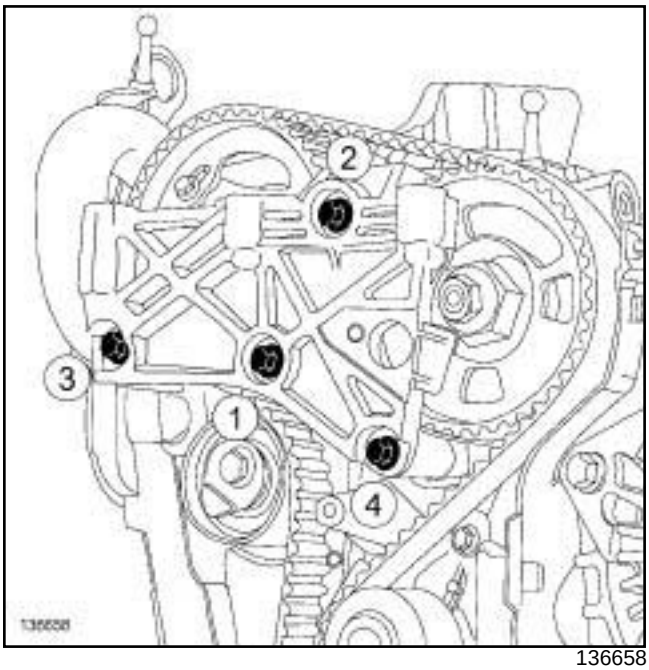

136658

❑ Refit the right-hand suspended mounting support.

❑ Torque tighten in order the **right-hand suspended engine mounting support bolts (25 N.m)**.

❑ Refit:

- the upper timing cover,
- the upper timing cover bolt.

❑ Clip on the upper timing cover.

❑ Remove the blanking plugs from:

- the diesel injector fuel return rail opening,
- the high pressure pump opening.

❑ Connect the diesel injector fuel return rail to the high pressure pump.

❑ Remove the blanking plugs from:

- the fuel supply pipe opening,
- the high pressure pump opening.

❑ Connect the fuel supply pipe to the high pressure pump.

❑ Refit:

- the high pressure pump protector,
- the high pressure pipe between the high pressure pump and the injector rail (see **13B**, **Diesel injection**, **High-pressure pipe between the pump and rail: Removal - Refitting**, page **13B-71**) ,
- the turbocharger air outlet pipe (see **12B**, **Turbocharging**, **Intercooler air inlet pipe: Removal - Refitting**, page **12B-41**) ,

K9K, and 830

- the camshaft position sensor (see **13B**, **Diesel injection**, **Camshaft position sensor: Removal - Refitting**, page **13B-19**) ,
- the right-hand suspended engine mounting (see **19D**, **Engine mounting**, **Right-hand suspended engine mounting: Removal - Refitting**, page **19D-18**) ,
- the scoop under the scuttle panel grille (see **Scoop under scuttle panel grille: Removal - Refitting**) (56A, Exterior equipment),
- the scuttle panel grille (see **Scuttle panel grille: Removal - Refitting**) (56A, Exterior equipment),
- the windscreen wiper arms (see **Windscreen wiper arm: Removal - Refitting**) (85A, Wiping - Washing),
- the lower engine tie-bar (see **19D**, **Engine mounting**, **Lower engine tie-bar: Removal - Refitting**, page **19D-33**) ,
- the crankshaft accessories pulley (see **11A**, **Top and front of engine**, **Crankshaft accessories pulley: Removal - Refitting**, page **11A-15**) ,
- the accessories belt (see **11A**, **Top and front of engine**, **Accessories belt: Removal - Refitting**, page **11A-7**) ,
- the engine undertray,
- the front section of the front right-hand wheel arch liner (see **Front wheel arch liner: Removal - Refitting**) (55A, Exterior protection),
- the front right-hand wheel (see **Wheel: Removal - Refitting**) (35A, Wheels and tyres).

❏ Connect the battery (see **Battery : Removal - Refitting**) (80A, Battery).

❏ Reprime the fuel circuit using the manual priming pump.

❏ Check that there are no diesel leaks.

❏ Apply the after repair procedure using the **diagnostic tool** :

- connect the **diagnostic tool**,
- select the "Injection computer",
- go to repair mode,
- display the "After repair procedure" for the selected computer,
- select "High pressure pump" in the "List of components stored by this computer",
- carry out the operations described in the "After repair procedure" section.

K9K, and 834

Essential special tooling	
Mot. 1525	Extractor for timing gear with tapered hub.
Mot. 1525-02	Adapter sockets for Mot.1525.

Essential equipment
offset spanner
diagnostic tool

Tightening torques ▽	
high pressure pump pulley nut	**70 N.m**
fuel supply pipe union protection bracket bolt	**23 N.m**
high pressure pump bolts	**23 N.m**
injector rail protector nuts	**21 N.m**
dipstick guide bolt	**8 N.m**
inner cover bolts	**9 N.m**
alternator bolts	**25 N.m**

IMPORTANT
Wear leaktight gloves (Nitrile type) for this operation.

IMPORTANT
To avoid all risk of damage to the systems, apply the safety and cleanliness instructions and operation recommendations before carrying out any repair (see **13B**, **Diesel injection**, **Diesel injection: Precautions for repair**, page **13B-1**) .

REMOVAL

I - REMOVAL PREPARATION OPERATION

❑ Position the vehicle on a two-post lift (see **Vehicle: Towing and lifting**) (02A, Lifting equipment).

❑ Disconnect the battery (see **Battery: Removal - Refitting**) (80A, Battery).

❑ Remove:

- the engine cover,
- the front right-hand wheel (see **Wheel: Removal - Refitting**) (35A, Wheels and tyres),
- the front section of the front right-hand wheel arch liner (see **Front wheel arch liner: Removal - Refitting**) (55A, Exterior protection),
- the engine undertray bolts,
- the engine undertray,
- the accessories belt (see **11A**, **Top and front of engine**, **Accessories belt: Removal - Refitting**, page **11A-7**) ,
- the crankshaft accessories pulley (see **11A**, **Top and front of engine**, **Crankshaft accessories pulley: Removal - Refitting**, page **11A-15**) ,
- the lower engine tie-bar (see **19D**, **Engine mounting**, **Lower engine tie-bar: Removal - Refitting**, page **19D-33**) ,
- the windscreen wiper arms (see **Windscreen wiper arm: Removal - Refitting**) (85A, Wiping - Washing),
- the scuttle panel grille (see **Scuttle panel grille: Removal - Refitting**) (56A, Exterior equipment),
- the scoop under the scuttle panel grille (see **Scoop under scuttle panel grille: Removal - Refitting**) (56A, Exterior equipment).
- the right-hand suspended engine mounting (see **19D**, **Engine mounting**, **Right-hand suspended engine mounting: Removal - Refitting**, page **19D-18**) ,
- the timing belt (see **11A**, **Top and front of engine**, **Timing belt: Removal - Refitting**, page **11A-29**) ,
- the high pressure pipe between the high pressure pump and the injector rail (see **13B**, **Diesel injection**, **High-pressure pipe between the rail and injector: Removal - Refitting**, page **13B-87**) .

K9K, and 834

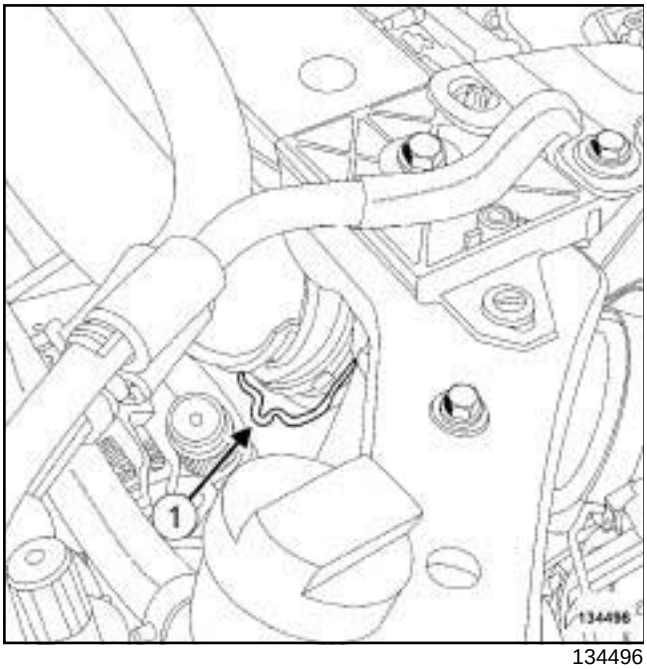

134496

❑ Pull the clip (**1**) on the intermediate air pipe between the turbocharger and the intercooler.

❑ Remove:

- the intermediate air pipe between the turbocharger and the intercooler,
- the intermediate air pipe seal from the intermediate air pipe between the turbocharger and the intercooler.

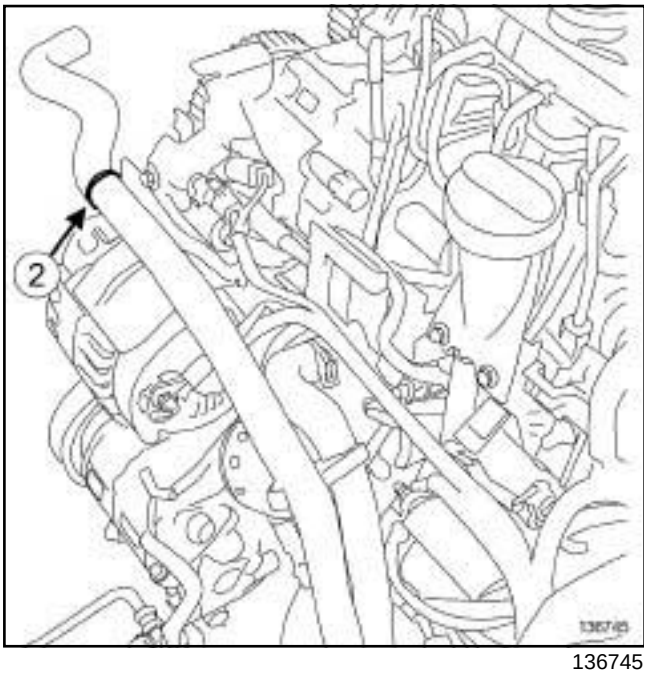

136745

❑ Unclip the expansion bottle bottom cooling hose from the alternator protector at (**2**) .

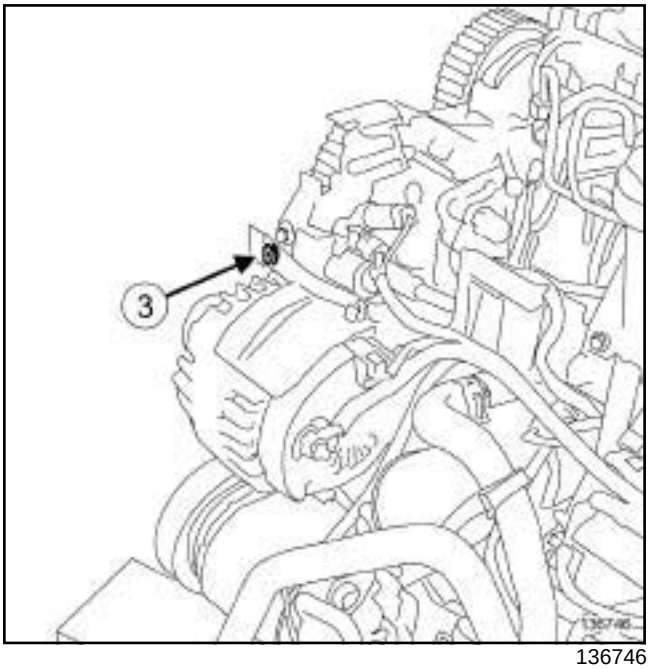

136746

❑ Remove:

- the alternator protector bolt (**3**) .
- the alternator protector.

K9K, and 834

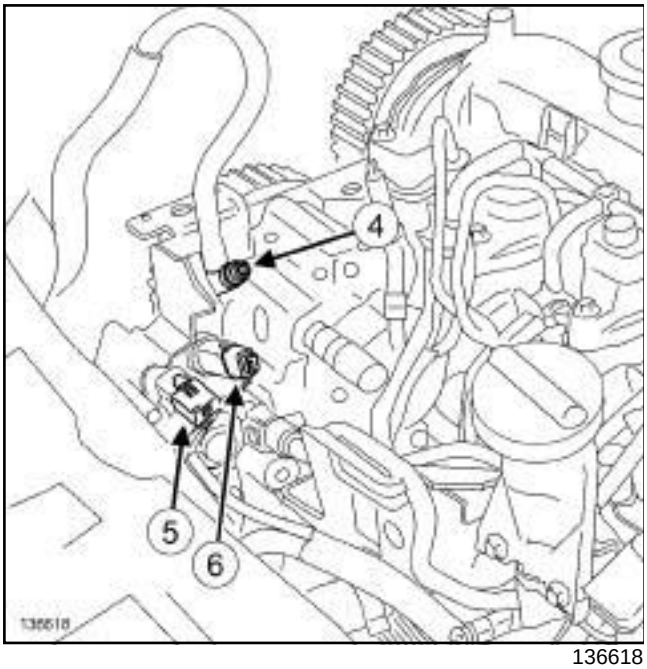

136618

- ❑ Disconnect the fuel supply pipe union (**4**) from the high pressure pump.
- ❑ Fit a suitable blanking plug on:
  - the high pressure pump opening,
  - the fuel supply pipe opening.
- ❑ Disconnect:
  - the flow actuator connector (**5**) ,
  - the fuel temperature sensor connector (**6**) .
- ❑ Unclip the alternator wiring from the injector rail protector.

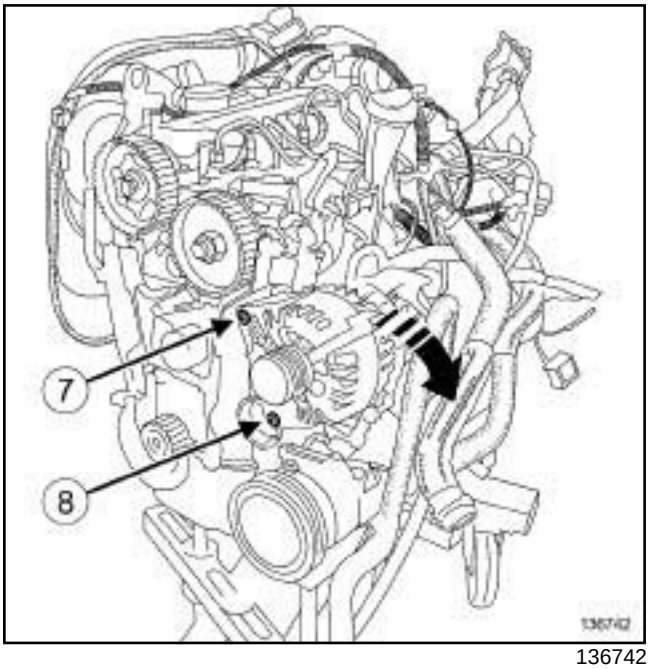

136742

- ❑ Remove the alternator upper bolt (**7**) .
- ❑ Loosen the alternator lower bolt (**8**) .
- ❑ Tilt the alternator forward.

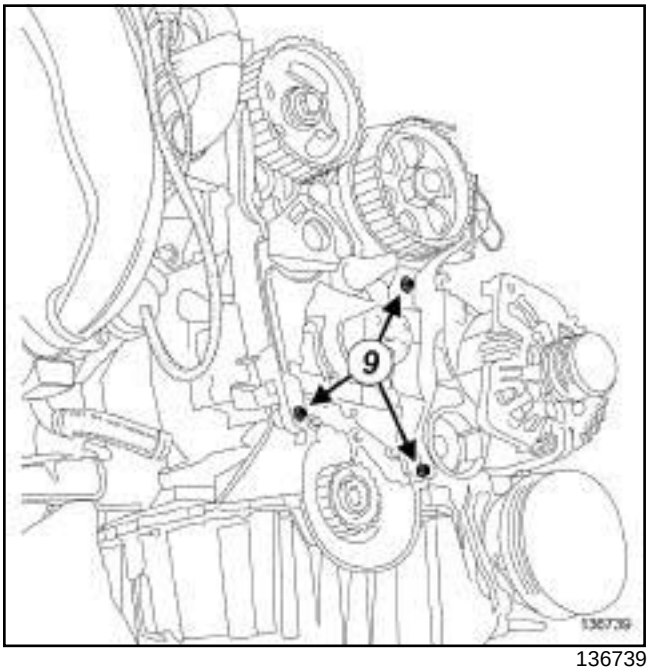

136739

- ❑ Remove:
  - the inner timing cover bolts (**9**) ,
  - the inner timing cover.

K9K, and 834

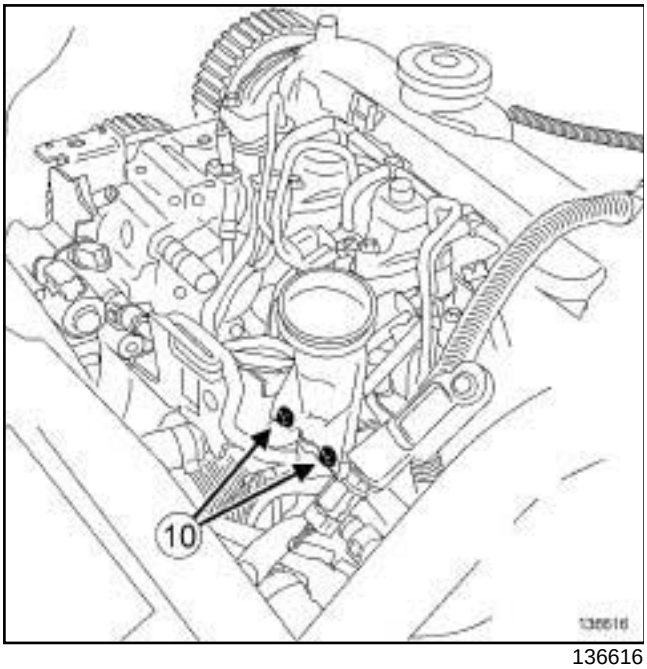

136616

❑ Remove:

- the dipstick,
- the dipstick guide bolts (**10**) .

❑ Move aside the dipstick guide.

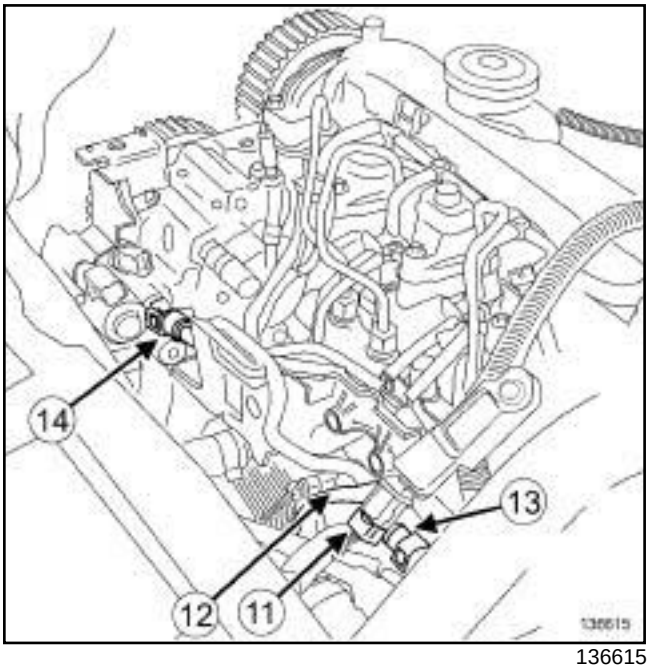

136615

❑ Disconnect the injector rail pressure sensor connector (**11**) .

❑ Unclip the diesel drain pipe (**12**) from the injector rail protector.

❑ Disconnect:

- the fuel supply pipe union (**13**) of the exhaust fuel injector from the fuel supply solenoid valve of the exhaust fuel injector,
- the fuel supply pipe union (**14**) of the exhaust fuel injector from the high pressure pump.

❑ Remove the fuel supply pipe from the exhaust fuel injector.

❑ Fit suitable blanking plugs on:

- the opening of the fuel supply solenoid valve for the exhaust fuel injector,
- the high pressure pump opening,
- the pipe openings of the exhaust fuel injector fuel supply solenoid valve.

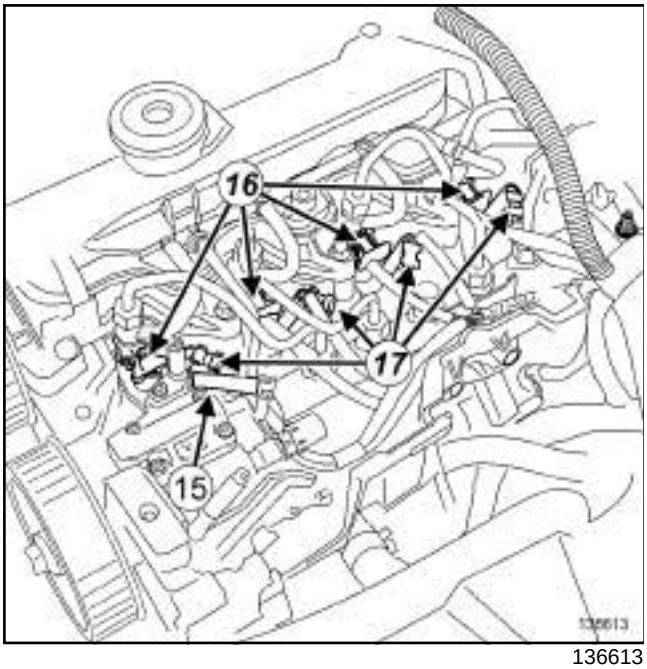

136613

- ❑ Disconnect the diesel injector fuel return rail from the Venturi at (**15**) .
- ❑ Place a suitable blanking plug on the Venturi opening.
- ❑ Disconnect:
  - the connector (**16**) from each diesel injector,
  - all heater plug connectors (**17**) .
- ❑ Unclip the diesel injector wiring from the injector rail protector.
- ❑ Remove the diesel injector wiring nut from the gearbox side lifting eye.
- ❑ Remove the diesel injection wiring.

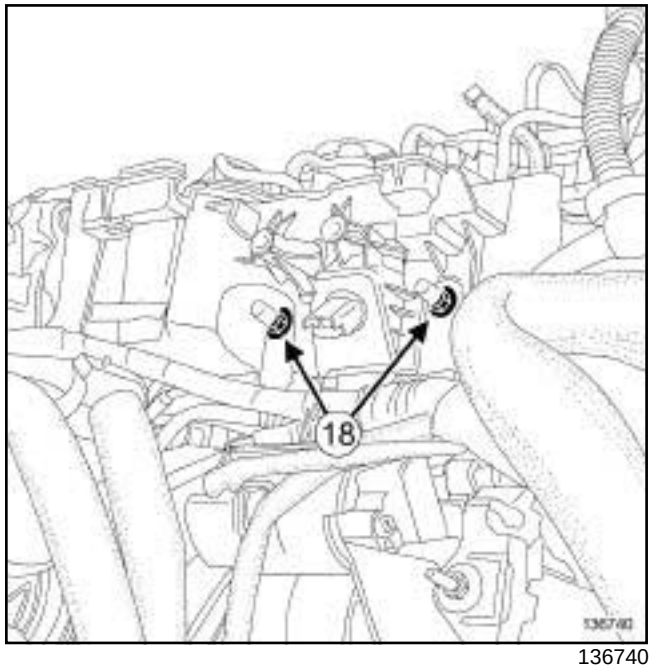

136740

- ❑ Remove:
  - the nuts (**18**) from the injector rail protector,
  - the injector rail protector.

II - OPERATION FOR REMOVAL OF PART CONCERNED

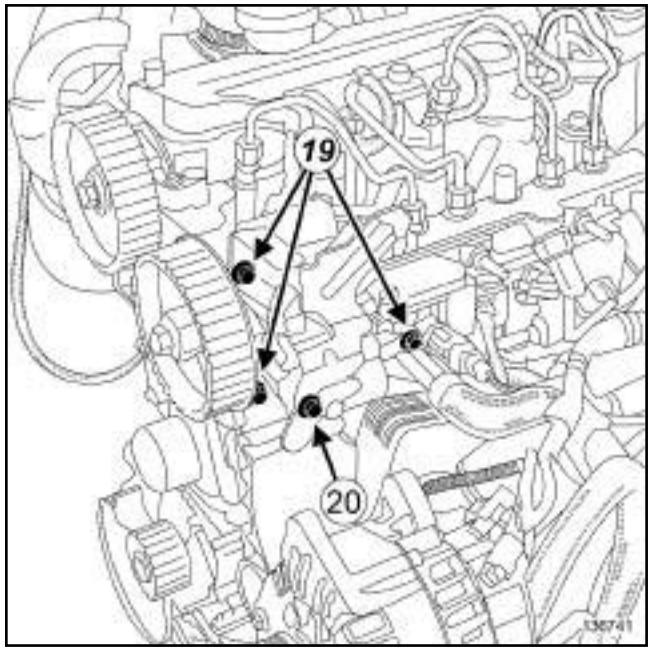

136741

- ❑ Remove:
  - the high pressure pump bolts (**19**) ,
  - the bolt (**20**) from the fuel supply pipe union protection bracket,

- the fuel supply pipe union protection bracket,
- the high pressure pump

REFITTING

I - REFITTING PREPARATION OPERATION

❑ Always replace the seal on the intermediate air pipe between the turbocharger and the intercooler.

If replacing the high pressure pump

❑

> Note:
>
> If replacing a high pressure pump, only remove the new high pressure pump from its original packaging when it is about to be fitted.

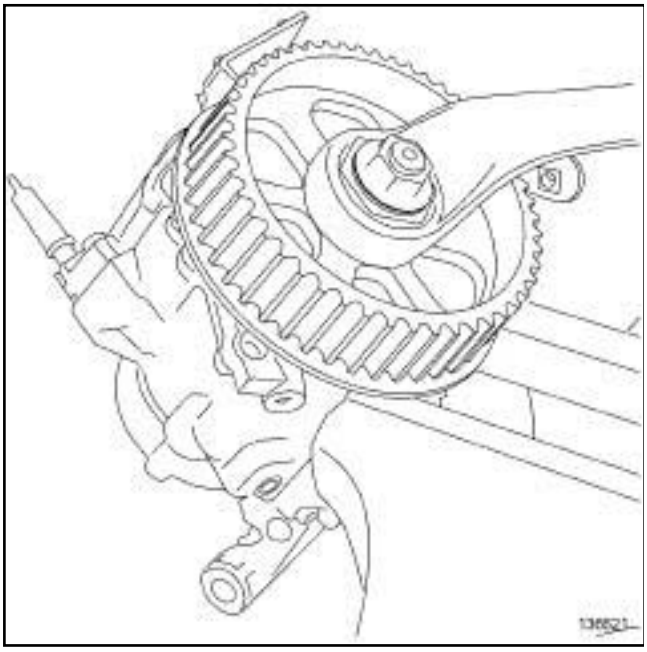

136621

❑

> Note:
>
> If the high pressure pump is replaced, retain the high pressure pump pulley and refit it to the new high pressure pump.

❑ Secure the high pressure pump in a vice with jaws, by the lower bolt hole on the high pressure pump pulley side.

❑ Immobilise the high pressure pump pulley using a **offset spanner**.

❑ Remove the nut from the high-pressure pump pulley.

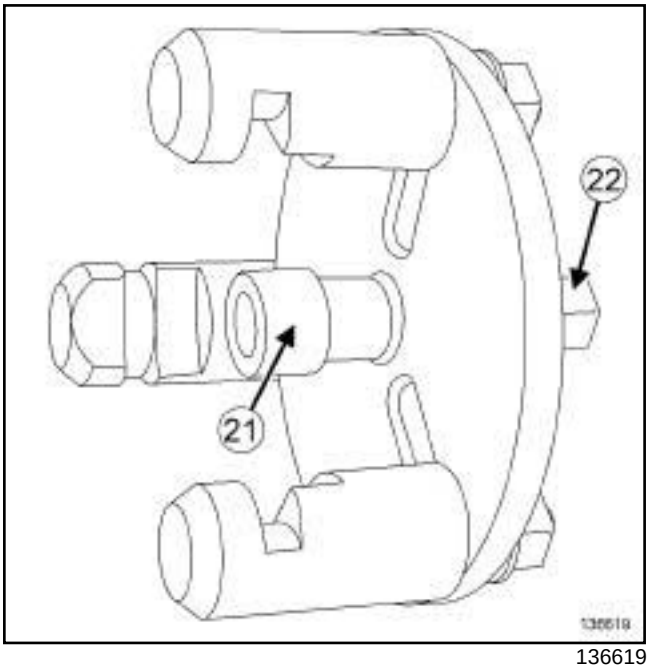

136619

❑ Remove the end piece (**21**) of the tool **(Mot. 1525)** by unscrewing the bolt (**22**) .

❑ Protect the contact areas between the tool **(Mot. 1525)** equipped with the tool **(Mot. 1525-02)** and the high pressure pump pulley.

❑ Fit the tool **(Mot. 1525)** equipped with the tool **(Mot. 1525-02)** to remove the high pressure pump pulley.

❑ Remove the high pressure pump pulley.

❑ A damaged high pressure pump pulley must always be replaced.

❑ Remove the old high pressure pump from the vice.

❑ Place the new high pressure pump in a vice with jaws, by the lower bolt hole on the high pressure pump pulley side.

❑ Refit the high pressure pump pulley.

❑ Immobilise the high pressure pulley using a **offset spanner**.

❑ Torque tighten the **high pressure pump pulley nut (70 N.m)**.

K9K, and 834

II - REFITTING OPERATION FOR PART CONCERNED

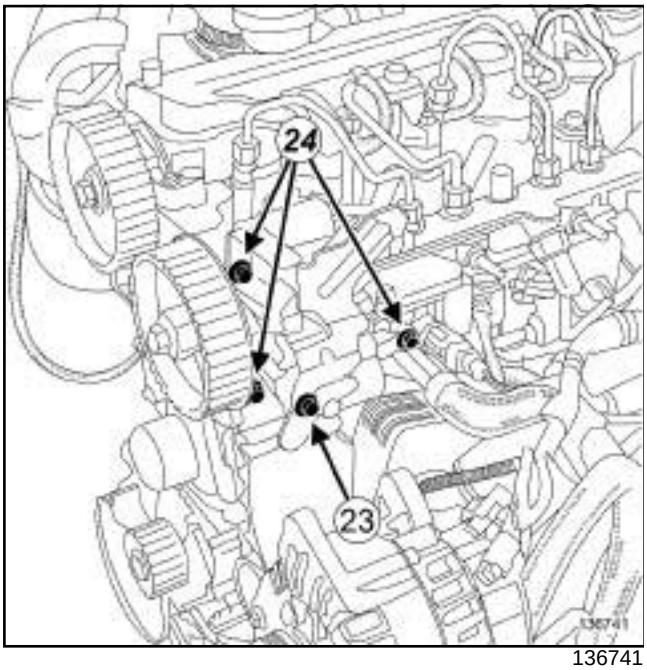

136741

❑ Refit:

- the high pressure pump,
- the fuel supply pipe union protection bracket.

❑ Tighten to torque:

- the **fuel supply pipe union protection bracket bolt (23 N.m)** (**23**) ,
- the **high pressure pump bolts (23 N.m)** (**24**) .

III - FINAL OPERATION

❑ Refit the injector rail protector.

❑ Torque tighten the **injector rail protector nuts (21 N.m)**.

❑ Fit the diesel injection wiring.

❑ Refit the diesel injection wiring nut on the gearbox side lifting eye.

❑ Clip the diesel injection wiring onto the injector rail protector.

❑ Connect:

- all heater plug connectors,
- the connector for each diesel injector.

❑ Remove the blanking plug from the opening of the Venturi.

❑ Connect the diesel injector fuel return rail to the Venturi.

❑ Remove the blanking plugs from:

- the opening of the fuel supply solenoid valve of the exhaust fuel injector,
- the opening of the high pressure pump,
- the pipe openings of the exhaust fuel injector fuel supply solenoid valve.

❑ Refit the fuel supply pipe on the exhaust fuel injector.

❑ Connect:

- the union of the exhaust fuel injector fuel supply pipe on the high pressure pump.
- the union of the exhaust fuel injector fuel supply pipe to the exhaust fuel injector fuel supply solenoid valve.

❑ Clip the diesel drain pipe onto the injector rail protector.

❑ Connect the injector rail pressure sensor connector.

❑ Fit the dipstick guide.

❑ Torque tighten the **dipstick guide bolt (8 N.m)**.

❑ Refit:

- the dipstick,
- the inner timing cover.

❑ Torque tighten the **inner cover bolts (9 N.m)**.

❑ Fit the alternator in place.

❑ Refit the alternator upper bolt.

❑ Torque tighten the **alternator bolts (25 N.m)**.

❑ Clip the alternator wiring onto the injector rail protector.

❑ Connect:

- the fuel temperature sensor connector,
- the flow actuator connector.

❑ Remove the blanking plugs from:

- the high pressure pump opening,
- the fuel supply pipe opening.

❑ Connect the fuel supply pipe union to the high pressure pump.

❑ Refit:

- the alternator protector,
- the alternator protector bolt.

❑ Clip the expansion bottle bottom cooling hose onto the alternator protector.

K9K, and 834

❑ Refit:

- a new seal on the intermediate air pipe between the turbocharger and the intercooler,
- the intermediate air pipe clip between the turbocharger and the intercooler.

❑ Clip the intermediate air pipe between the turbocharger and the intercooler on the intercooler air inlet pipe.

❑ Refit:

- the high pressure pipe between the high pressure pump and the injector rail (see **13B**, **Diesel injection**, **High-pressure pipe between the rail and injector: Removal - Refitting**, page **13B-87**) ,
- the timing belt (see **11A**, **Top and front of engine**, **Timing belt: Removal - Refitting**, page **11A-29**) ,
- the right-hand suspended engine mounting (see **19D**, **Engine mounting**, **Right-hand suspended engine mounting: Removal - Refitting**, page **19D-18**) ,
- the scoop under the scuttle panel grille (see **Scoop under scuttle panel grille: Removal - Refitting**) (56A, Exterior equipment).
- the scuttle panel grille (see **Scuttle panel grille: Removal - Refitting**) (56A, Exterior equipment),
- the windscreen wiper arms (see **Windscreen wiper arm: Removal - Refitting**) (85A, Wiping - Washing).
- the lower engine tie-bar (see **19D**, **Engine mounting**, **Lower engine tie-bar: Removal - Refitting**, page **19D-33**)
- the accessories belt (see **11A**, **Top and front of engine**, **Accessories belt: Removal - Refitting**, page **11A-7**) ,
- the engine undertray,
- the front section of the front right-hand wheel arch liner (see **Front wheel arch liner: Removal - Refitting**) (55A, Exterior protection),
- the front right-hand wheel (see **Wheel: Removal - Refitting**) (35A, Wheels and tyres),
- the engine cover.

❑ Connect the battery (see **Battery : Removal - Refitting**) (80A, Battery).

❑ Apply the after repair procedure using the **diagnostic tool** :

- connect the **diagnostic tool**,
- select "Injection computer",
- go to repair mode,
- display the "After repair procedure" for the selected computer,
- select "High pressure pump" in the "List of components stored by this computer" section,
- carry out the operations described in the "After repair procedure" section.

F9Q

Essential special tooling	
Mot. 1668	Locking high pressure pump sprocket.
Mot. 1525	Extractor for timing gear with tapered hub.
Mot. 1525-03	Adapter sockets for Mot.1525. (for 33-tooth pulley).

Tightening torques ▽	
high pressure pump bolts	**25 N.m**
high pressure pump pulley nut	**50 N.m**
high pressure pump support bolts on the cylinder head	**20 N.m + 80°**
bolt for the high pressure pump rear support	**30 N.m**

IMPORTANT
To avoid all risk of damage to the systems, apply the safety and cleanliness instructions and operation recommendations before carrying out any repair (see **13B**, **Diesel injection**, **Diesel injection: Precautions for repair**, page **13B-1**) .

REMOVAL

I - REMOVAL PREPARATION OPERATION

❑ Position the vehicle on a two-post lift (see **Vehicle: Towing and lifting**) (02A, Lifting equipment).

❑ Disconnect the battery (see **Battery: Removal - Refitting**) (80A, Battery).

❑ Remove:

- the engine cover,
- the engine undertray bolts,
- the engine undertray,
- the front right-hand wheel (see **Wheel: Removal - Refitting**) (35A, Wheels and tyres),
- the accessories belt (see **11A**, **Top and front of engine**, **Accessories belt: Removal - Refitting**, page **11A-7**) ,
- the crankshaft accessories pulley (see **11A**, **Top and front of engine**, **Crankshaft accessories pulley: Removal - Refitting**, page **11A-15**) ,
- the windscreen wiper arms (see **Windscreen wiper arm: Removal - Refitting**) (85A, Wiping - Washing),
- the scuttle panel grille (see **Scuttle panel grille: Removal - Refitting**) (56A, Exterior equipment),
- the scoop under the scuttle panel grille (see **Scoop under scuttle panel grille: Removal - Refitting**) (56A, Exterior equipment),
- the right-hand suspended engine mounting (see **19D**, **Engine mounting**, **Right-hand suspended engine mounting: Removal - Refitting**, page **19D-18**) ,
- the timing belt (see **11A**, **Top and front of engine**, **Timing belt: Removal - Refitting**, page **11A-29**) ,
- the injector rail protector (see **13B**, **Diesel injection**, **Injector rail protector: Removal - Refitting**, page **13B-70**) ,
- the fuel temperature sensor (see **13B**, **Diesel injection**, **Fuel temperature sensor: Removal - Refitting**, page **13B-118**) ,
- the high pressure pipe between the pump and the rail (see **13B**, **Diesel injection**, **High-pressure pipe between the pump and rail: Removal - Refitting**, page **13B-71**) .

F9Q

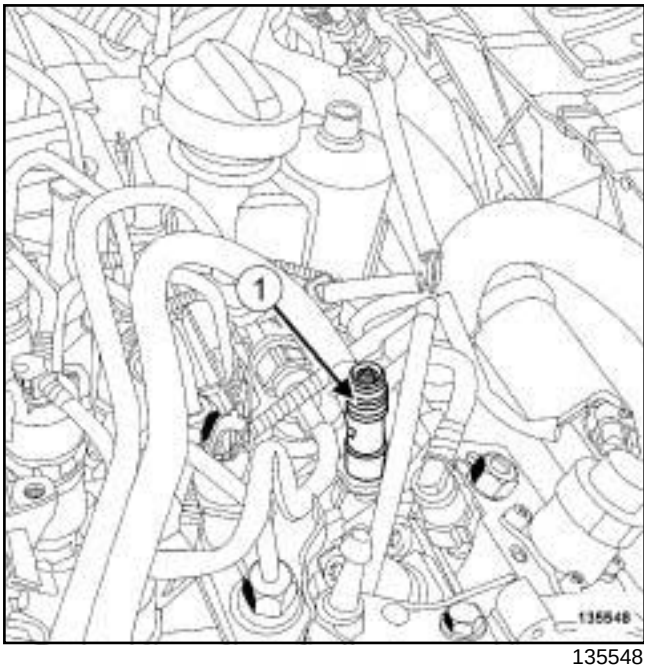

135548

❑

WARNING

To prevent impurities from entering the circuit, place protective plugs on all fuel circuit components exposed to the open air.

❑ Disconnect the supply pipe union (**1**) from the high pressure pump.

❑ Insert the blanking plugs.

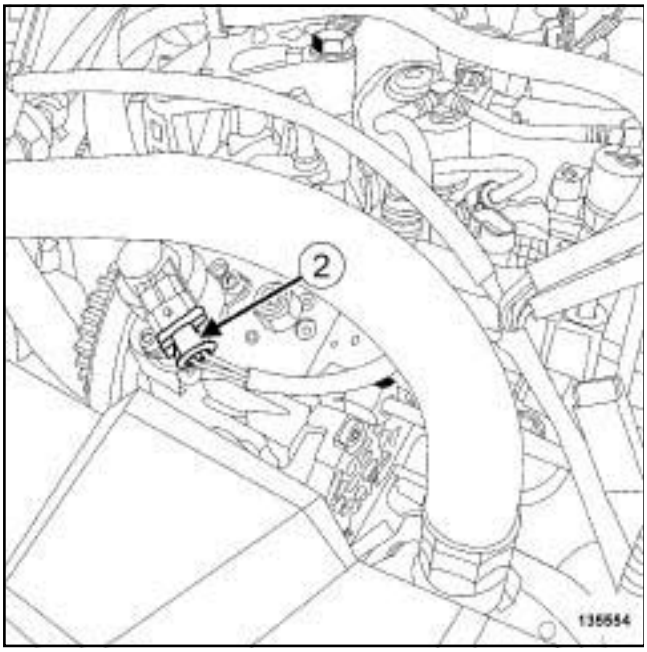

135554

❑ Disconnect the connector (**2**) from the regulator on the high pressure pump.

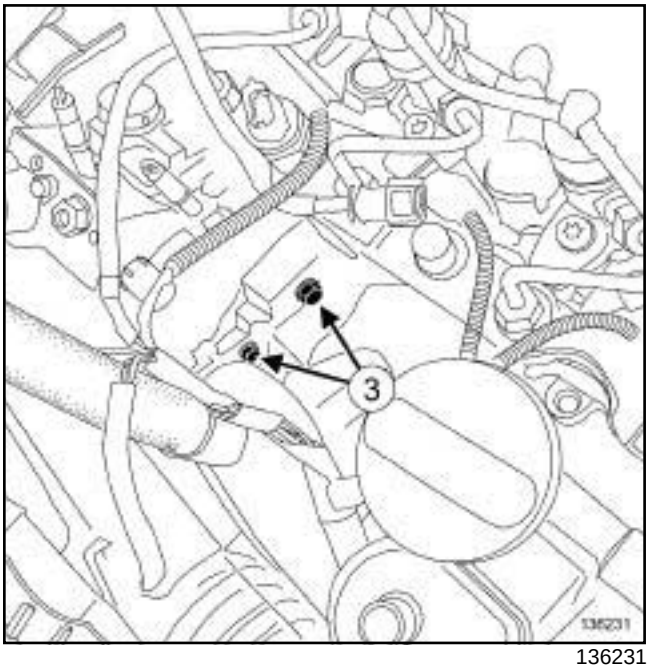

136231

❑ Remove the bolts (**3**) from the high pressure pump rear support.

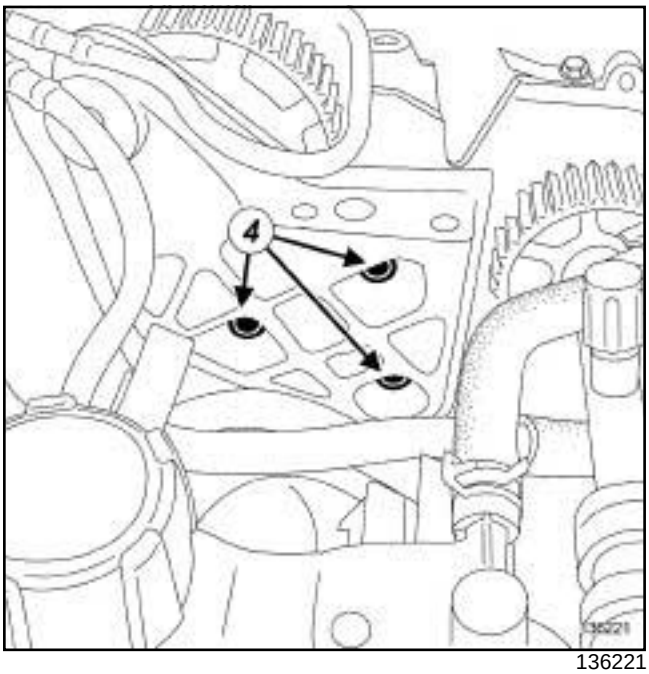

136221

❑ Remove:

- the bolts (**4**) from the high pressure support on the cylinder head,
- the "high pressure pump support - high pressure pump" assembly.

F9Q

II - OPERATION FOR REMOVAL OF PART CONCERNED

❑ Fit the "high pressure pump support - high pressure pump" assembly in a vice equipped with jaws.

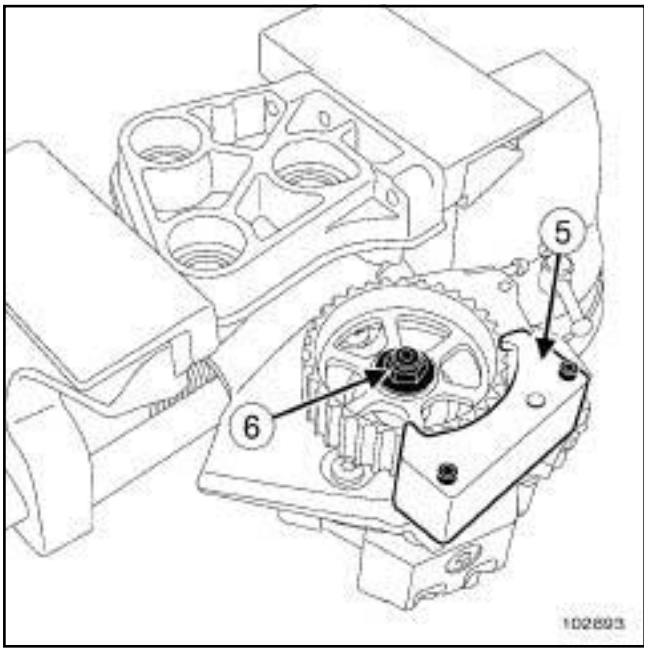

102893

❑ Position the **(Mot. 1668)** (**5**) .

❑ Remove the nut (**6**) from the high pressure pump pulley.

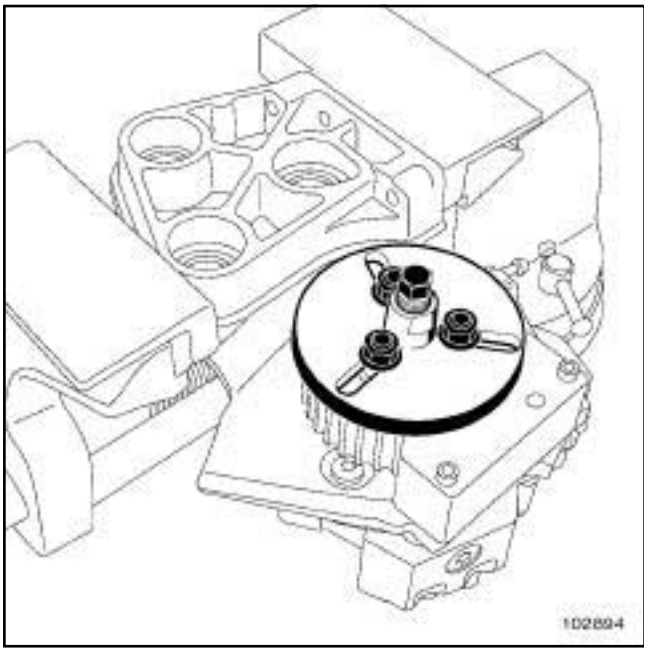

102894

❑ Fit the **(Mot. 1525)** fitted with the **(Mot. 1525-03)**.

❑ Remove:

- the high pressure pump pulley,
- the tool **(Mot. 1525)** equipped with the tool **(Mot. 1525-03)**,
- the **(Mot. 1668)**.

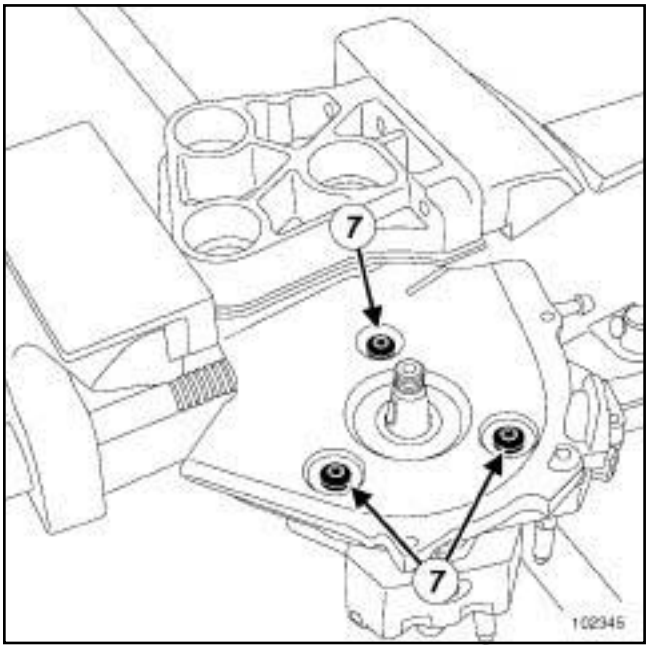

102345

❑ Remove:

- the high pressure pump bolts (**7**) ,
- the high pressure pump.

REFITTING

I - REFITTING OPERATION FOR PART CONCERNED

❑ Refit the high pressure pump.

❑ Torque tighten the **high pressure pump bolts (25 N.m)**.

❑ Refit the high pressure pump pulley.

❑ Position the **(Mot. 1668)**.

❑ Torque tighten the **high pressure pump pulley nut (50 N.m)**.

❑ Remove the tool **(Mot. 1668)**.

II - FINAL OPERATION

❑ Refit the "high pressure pump support - high pressure pump" assembly.

❑ Torque and angle tighten the **high pressure pump support bolts on the cylinder head (20 N.m + 80°)**.

❑ Torque tighten the **bolt for the high pressure pump rear support (30 N.m)**.

F9Q

- ❑ Connect the connector to the regulator on the high pressure pump.
- ❑ Remove the blanking plugs.
- ❑ Connect the supply pipe union on the high pressure pump.
- ❑ Refit:
  - the high pressure pipe between the pump and the rail (see **13B**, **Diesel injection**, **High-pressure pipe between the pump and rail: Removal - Refitting**, page **13B-71**) ,
  - the fuel temperature sensor (see **13B**, **Diesel injection**, **Fuel temperature sensor: Removal - Refitting**, page **13B-118**) ,
  - the injector rail protector (see **13B**, **Diesel injection**, **Injector rail protector: Removal - Refitting**, page **13B-70**) ,
  - the timing belt (see **11A**, **Top and front of engine**, **Timing belt: Removal - Refitting**, page **11A-29**) ,
  - the right-hand suspended engine mounting (see **19D**, **Engine mounting**, **Right-hand suspended engine mounting: Removal - Refitting**, page **19D-18**) ,
  - the scoop under the scuttle panel grille (see **Scoop under scuttle panel grille: Removal - Refitting**) (56A, Exterior equipment),
  - the scuttle panel grille (see **Scuttle panel grille: Removal - Refitting**) (56A, Exterior equipment),
  - the windscreen wiper arms (see **Windscreen wiper arm: Removal - Refitting**) (85A, Wiping - Washing),
  - the crankshaft accessories pulley (see **11A**, **Top and front of engine**, **Crankshaft accessories pulley: Removal - Refitting**, page **11A-15**) ,
  - the accessories belt (see **11A**, **Top and front of engine**, **Accessories belt: Removal - Refitting**, page **11A-7**) ,
  - the front right-hand wheel (see **Wheel: Removal - Refitting**) (35A, Wheels and tyres),
  - the engine undertray,
  - the engine cover.
- ❑ Connect the battery (see **Battery : Removal - Refitting**) (80A, Battery).

K9K, and 830

IMPORTANT

To avoid all risk of damage to the systems, apply the safety and cleanliness instructions and operation recommendations before carrying out any repair (see **13B**, **Diesel injection**, **Diesel injection: Precautions for repair**, page **13B-1**) .

Note:

Ensure that you have a new flow actuator before opening up the fuel circuit.

REMOVAL

I - OPERATION FOR REMOVAL OF PART CONCERNED

❑ Remove the engine cover.

❑ Disconnect the battery (see **Battery: Removal - Refitting**) (80A, Battery).

❑ Remove the turbocharger outlet air pipe (see **12B**, **Turbocharging**, **Intercooler air inlet pipe: Removal - Refitting**, page **12B-41**) .

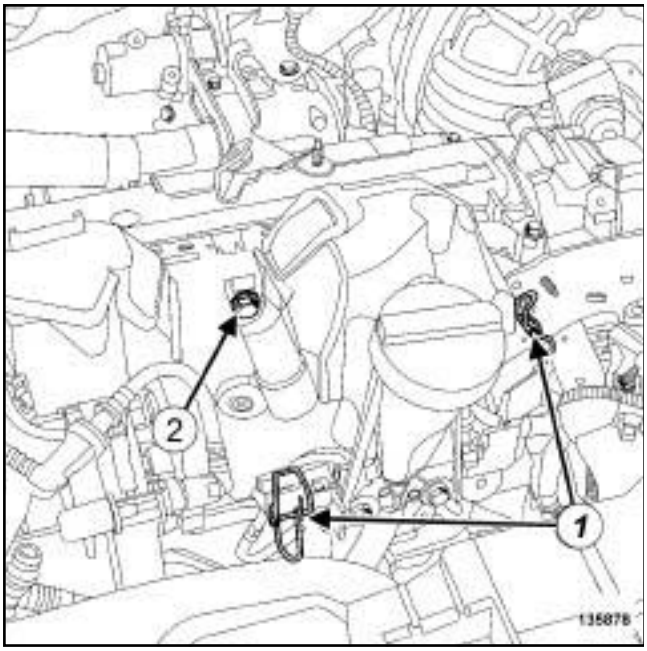

135878

❑ Unclip the injector rail protector cover at (**1**) .

❑ Remove:

- the injector rail protector cover bolt (**2**) ,
- the injection rail protector cover,

II - OPERATION FOR REMOVAL OF PART CONCERNED

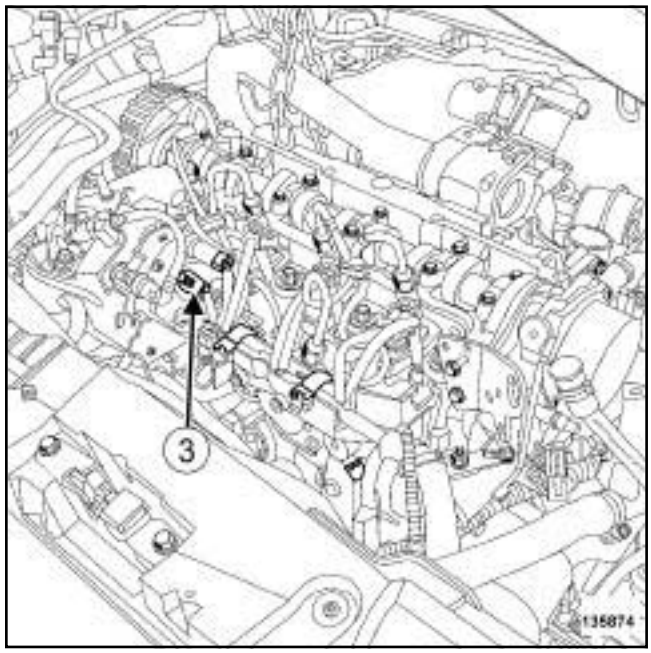

135874

❑ Disconnect the flow actuator connector (**3**) .

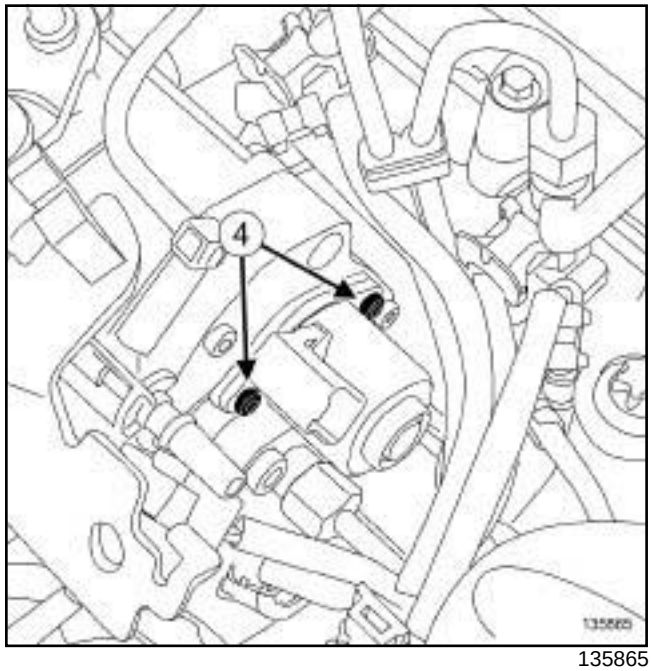

135865

❑ Remove:

- the flow actuator bolts (**4**) ,
- the fuel flow actuator

K9K, and 830

- Make sure that no impurities enter the high pressure pump when the fuel flow actuator is removed.

> **WARNING**
> Do not blast with compressed air once the fuel circuit is open, otherwise impurities may enter the system. Only use cleaning cloths.

REFITTING

I - REFITTING PREPARATION OPERATION

- **parts always to be replaced: Fuel flow regulator seal on injection pump (11,05,10,20)**.

> **WARNING**
> Do not remove the blanking plugs from each component until the last moment.
>
> Also, do not remove the components from their packaging until they are to be fitted to the vehicle.

II - REFITTING OPERATION FOR PART CONCERNED

- Refit the flow actuator to the high pressure pump.
- Connect the flow actuator connector.

III - FINAL OPERATION

- Prime the fuel circuit using the manual priming pump.
- Refit the injector rail protector cover.
- Clip on the injector rail protector cover.
- Refit the turbocharger air outlet pipe (see **12B**, **Turbocharging**, **Intercooler air inlet pipe: Removal - Refitting**, page **12B-41**) .
- Connect the battery (see **Battery : Removal - Refitting**) (80A, Battery).
- Start the engine.
- Check that there are no fuel leaks.
- Refit the engine cover.

K9K, and 834

IMPORTANT

To avoid all risk of damage to the systems, apply the safety and cleanliness instructions and operation recommendations before carrying out any repair (see **13B**, **Diesel injection**, **Diesel injection: Precautions for repair**, page **13B-1**) .

IMPORTANT

Wear leaktight gloves (Nitrile type) for this operation.

REMOVAL

I - REMOVAL PREPARATION OPERATION

❑ Disconnect the battery (see **Battery: Removal - Refitting**) (80A, Battery).

❑ Remove the front engine cover.

II - OPERATION FOR REMOVAL OF PART CONCERNED

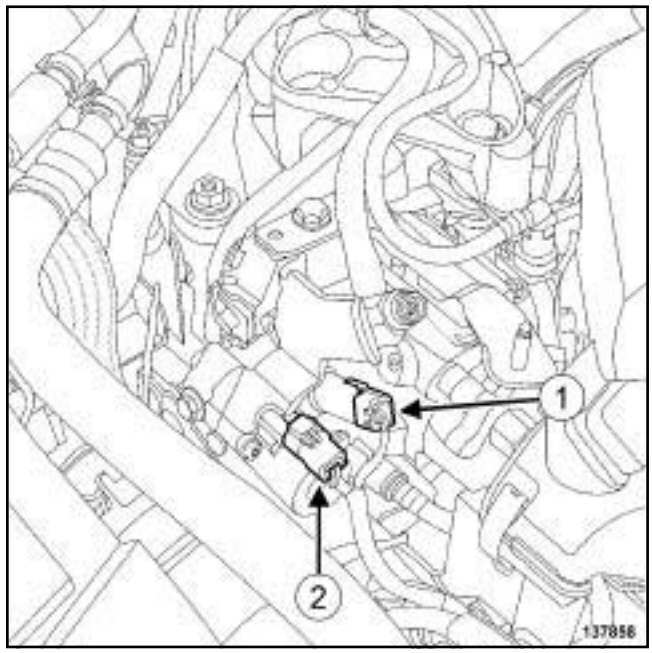

137858

❑ Disconnect:

- the fuel temperature sensor connector (**1**) ,
- the flow actuator connector (**2**) .

WARNING

Prepare for the flow of fluid, and protect the surrounding components.

WARNING

Do not blast with compressed air once the fuel circuit is open, otherwise impurities may enter the system. Only use cleaning cloths.

Note:

Make sure that no impurities enter the high pressure pump when the fuel flow actuator is removed.

K9K, and 834

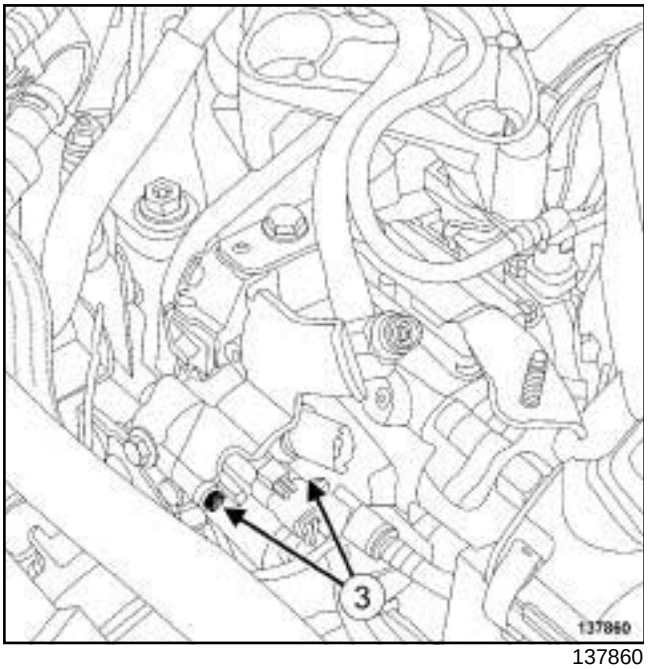

137860

❑ Remove:

- the flow actuator bolts (**3**) ,
- the flow actuator from the high pressure pump (by hand with small tugs and successive turns).

REFITTING

I - REFITTING PREPARATION OPERATION

❑

> Note:
>
> Do not lubricate the seals with grease or old diesel fuel. Use the applicator provided in the kit for the new part.

II - REFITTING OPERATION FOR PART CONCERNED

❑ Refit:

- the flow actuator on the high pressure pump,
- the flow actuator bolts.

III - FINAL OPERATION

❑ Refit the engine cover.

❑ Connect the battery (see **Battery : Removal - Refitting**) (80A, Battery).

K9K, and 830

Tightening torques ▽	
Venturi bolt	**5.5 N.m**

IMPORTANT
To avoid all risk of damage to the systems, apply the safety and cleanliness instructions and operation recommendations before carrying out any repair (see **13B**, **Diesel injection**, **Diesel injection: Precautions for repair**, page **13B-1**) .

WARNING
To avoid any corrosion or damage, protect the areas on which fuel is likely to run.

WARNING
Keep the pipe unions away from contaminated areas.

Note:
Ensure that you have a new Venturi before opening up the fuel circuit.

REMOVAL

I - REMOVAL PREPARATION OPERATION

❑ Remove:

- the engine cover,
- the turbocharger air outlet pipe (see **12B**, **Turbocharging**, **Intercooler air inlet pipe: Removal - Refitting**, page **12B-41**) .

II - OPERATION FOR REMOVAL OF PART CONCERNED

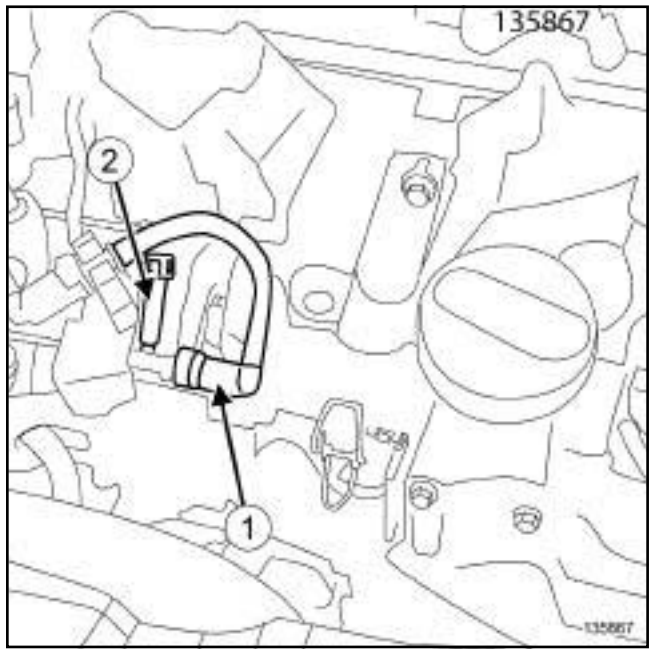

135867

❑ Disconnect the diesel fuel return pipe union from the Venturi (**1**) .

❑ Fit blanking plugs on:

- the opening of the venturi,
- the diesel fuel return pipe opening.

❑ Disconnect the diesel fuel injector return rail from the Venturi (**2**) .

❑ Fit suitable blanking plugs on:

- the opening of the venturi,
- the opening of the diesel injector fuel return rail.

K9K, and 830

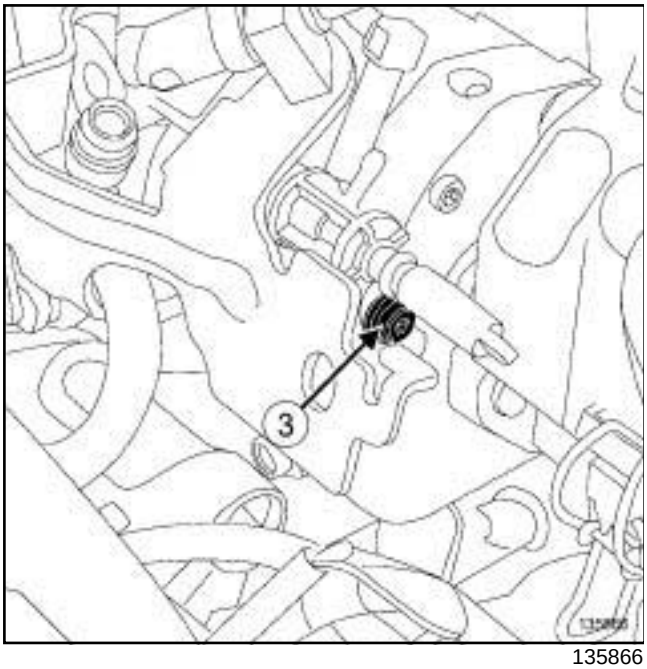

135866

❑ Remove:

- the Venturi bolt (**3**) ,
- the Venturi.

❑ Take care to ensure that no impurities get into the high pressure pump once the Venturi is removed.

> **WARNING**
> Do not blast with compressed air once the fuel circuit is open, otherwise impurities may enter the system. Only use cleaning cloths.

REFITTING

I - REFITTING OPERATION FOR PART CONCERNED

❑

> Note:
> Do not lubricate the seals with grease or used diesel fuel. Use the applicator provided in the kit for the new part.

❑ Refit the venturi to the high pressure pump.

❑ Torque tighten the **Venturi bolt (5.5 N.m)**.

❑ Remove the blanking plugs from:

- the diesel injector fuel return rail opening,
- the Venturi opening.

❑ Connect the fuel return rail to the Venturi.

❑ Remove the blanking plugs from:

- the opening of the diesel fuel return pipe union,
- the Venturi opening.

❑ Connect the diesel return pipe to the Venturi.

II - FINAL OPERATION

❑ Refit the turbocharger air outlet pipe (see **12B**, **Turbocharging**, **Intercooler air inlet pipe: Removal - Refitting**, page **12B-41**) .

❑ Start the engine.

❑ Check that there are no fuel leaks.

❑ Refit the engine cover.

K9K, and 834

Tightening torques ▽	
Venturi bolt	**5.5 N.m**

IMPORTANT
To avoid all risk of damage to the systems, apply the safety and cleanliness instructions and operation recommendations before carrying out any repair (see **13B**, **Diesel injection**, **Diesel injection: Precautions for repair**, page **13B-1**) .

IMPORTANT
Wear leaktight gloves (Nitrile type) for this operation.

Note:
Make sure that you have a new venturi before opening the fuel circuit.

REMOVAL

I - REMOVAL PREPARATION OPERATION

❑ Remove the front engine cover.

WARNING
Prepare for the flow of fluid, and protect the surrounding components.

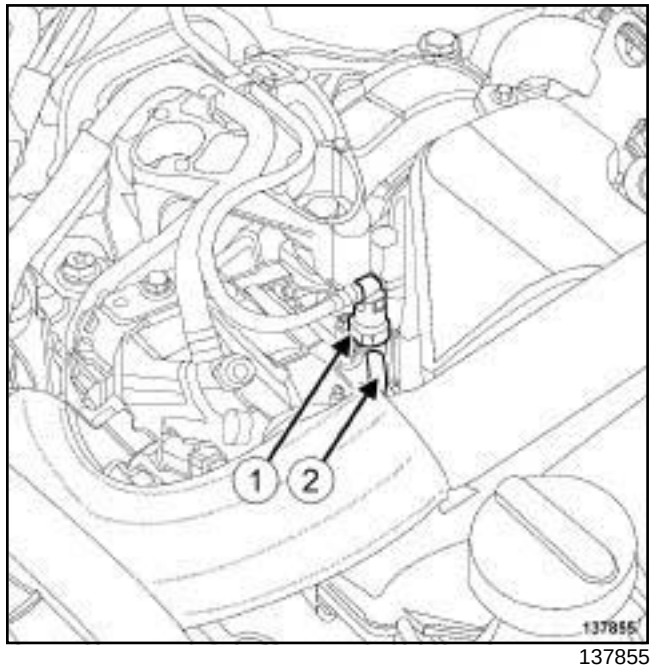

137855

❑ Disconnect from the Venturi:
- the diesel fuel return pipe union (**1**) ,
- the diesel injector fuel return rail (**2**) .

❑ Fit blanking plugs on:
- the openings of the Venturi,
- the diesel return pipe opening.

K9K, and 834

II - OPERATION FOR REMOVAL OF PART CONCERNED

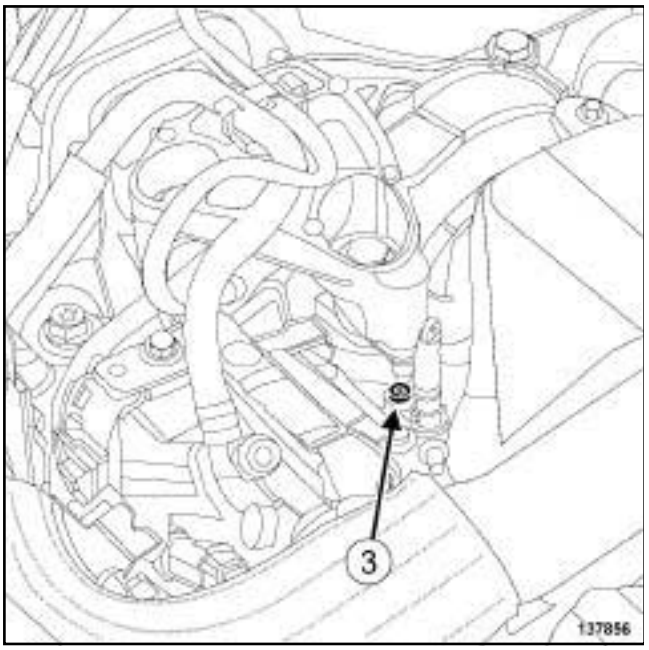

137856

❑ Remove:

- the Venturi bolt (**3**) ,
- the Venturi from the high pressure pump (with small tugs and successive turns).

REFITTING

I - REFITTING PREPARATION OPERATION

❑

> Note:
>
> Do not lubricate the seals with grease or old diesel fuel. Use the applicator provided in the kit for the new part.

II - REFITTING OPERATION FOR PART CONCERNED

❑ Refit the venturi to the high pressure pump.

❑ Torque tighten the **Venturi bolt (5.5 N.m)**.

III - FINAL OPERATION

❑ Remove the blanking plugs from:

- the openings of the Venturi,
- the diesel fuel return pipe opening.

❑ Connect:

- the diesel injector fuel return rail to the Venturi,
- the diesel fuel return pipe union to the Venturi.

❑ Refit the engine cover.

Diesel return pipe: Removal - Refitting

F9Q

- The diesel return pipe is not sold separately by the Parts Department; to replace it, it is necessary to replace the fuel temperature sensor (see **13B**, **Diesel injection**, **Fuel temperature sensor: Removal - Refitting**, page **13B-118**) .

Diesel injector fuel return rail: Removal - Refitting

F9Q

IMPORTANT

To avoid all risk of damage to the systems, apply the safety and cleanliness instructions and operation recommendations before carrying out any repair (see **13B**, **Diesel injection**, **Diesel injection: Precautions for repair**, page **13B-1**) .

REMOVAL

I - REMOVAL PREPARATION OPERATION

❑ Disconnect the battery (see **Battery: Removal - Refitting**) (80A, Battery).

❑ Remove:

- the engine cover,
- the injector rail protector (see **13B**, **Diesel injection**, **Injector rail protector: Removal - Refitting**, page **13B-70**) .

II - OPERATION FOR REMOVAL OF PART CONCERNED

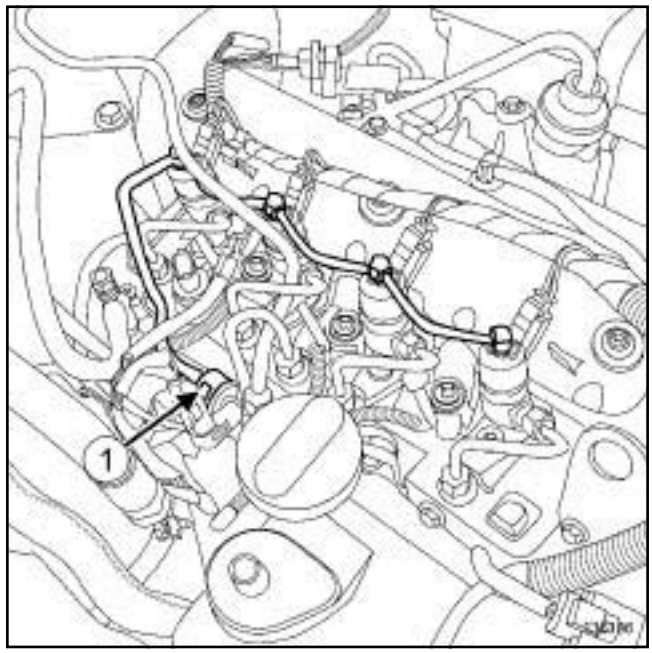

136196

❑

WARNING

To prevent impurities from entering the circuit, place protective plugs on all fuel circuit components exposed to the open air.

❑ Disconnect the union (**1**) between the diesel temperature sensor and the diesel fuel injector return rail.

❑ Place blanking plugs:

- on the diesel injector fuel return rail,
- on the diesel temperature sensor.

F9Q

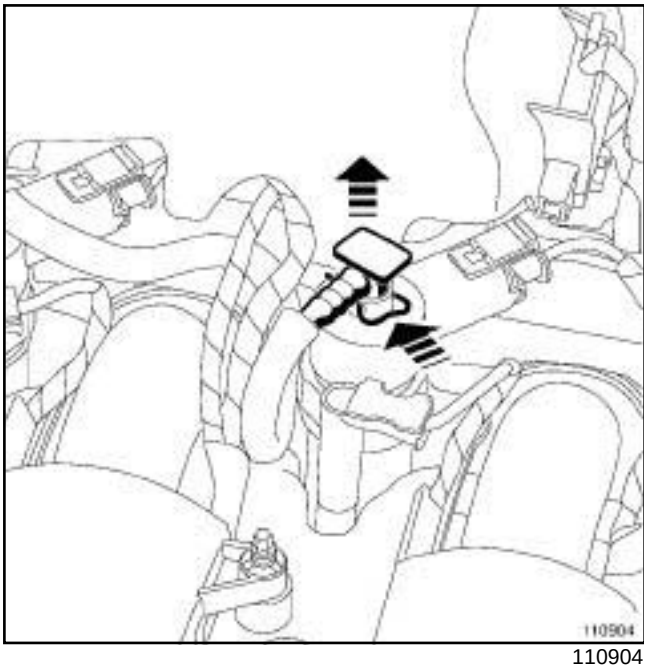

110904

- ❑ Press the injector clips.
- ❑ Vertically pull the end piece of the fuel return rail on each diesel fuel injector.
- ❑ Remove the diesel injector fuel return rail.
- ❑ Fit blanking plugs onto the injectors.
- ❑ Place the diesel injector fuel return rail in a protective bag.

REFITTING

I - REFITTING PREPARATION OPERATION

❑

> **WARNING**
> Do not remove the blanking plugs from each component until the last moment.
>
> Also, do not remove the components from their packaging until they are to be fitted to the vehicle.

II - REFITTING OPERATION FOR PART CONCERNED

- ❑ Take the diesel injector fuel return rail out of the protective bag or out of its packaging.
- ❑ Remove the blanking plugs.
- ❑ Refit the diesel injector fuel return rail.
- ❑ Connect the union between the diesel temperature sensor and the diesel fuel injector return rail.

III - FINAL OPERATION

❑ Refit:

- the injector rail protector (see **13B**, **Diesel injection**, **Injector rail protector: Removal - Refitting**, page **13B-70**) ,
- the engine cover.

❑ Connect the battery (see **Battery : Removal - Refitting**) (80A, Battery).

Diesel injector fuel return rail: Removal - Refitting

K9K, and 832

Tightening torques ▽	
intercooler air outlet pipe clip on the damper valve	**5.5 N.m**

IMPORTANT

To avoid all risk of damage to the systems, apply the safety and cleanliness instructions and operation recommendations before carrying out any repair (see **13B**, **Diesel injection**, **Diesel injection: Precautions for repair**, page **13B-1**) .

IMPORTANT

Wear leaktight gloves (Nitrile type) for this operation.

WARNING

To avoid any corrosion or damage, protect the areas on which fuel is likely to run.

REMOVAL

I - REMOVAL PREPARATION OPERATION

❑ Disconnect the battery (see **Battery: Removal - Refitting**) (80A, Battery).

❑ Remove the front engine cover.

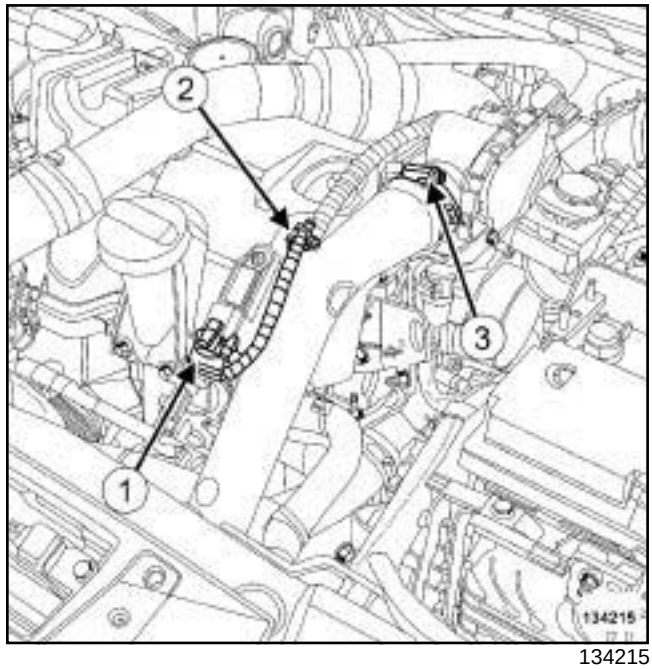

134215

❑ Disconnect the turbocharger pressure sensor connector (**1**) .

❑ Unclip the wiring for the turbocharging pressure sensor from the intercooler air outlet pipe at (**2**) .

❑ Loosen the damper valve clip (**3**) from the intercooler air outlet pipe.

❑ Disconnect the intercooler air outlet pipe from the damper valve.

❑ Separate the intercooler air outlet pipe from the damper valve.

K9K, and 832

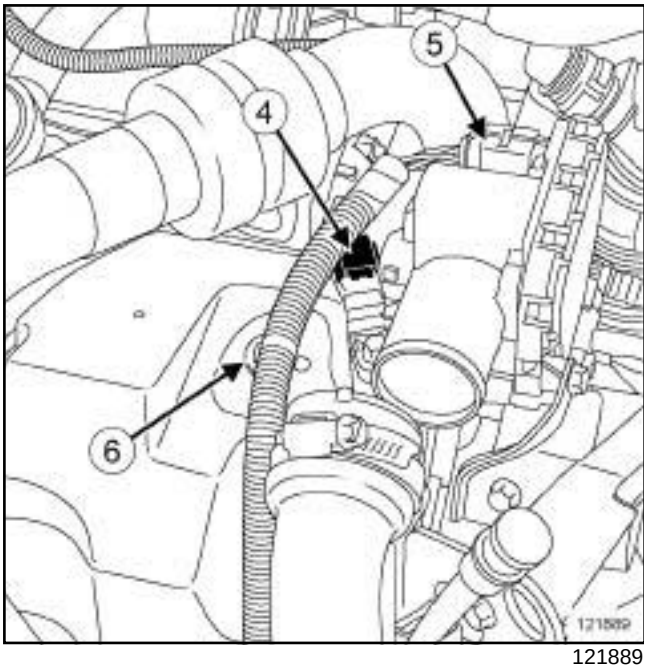

121889

❑ Disconnect:

- the damper valve connector (**4**) ,
- the connector (**5**) from the camshaft position sensor.

❑ Unclip the damper valve wiring from the injector rail protector cover plate at (**6**) .

❑ Remove the turbocharger outlet air pipe (see **12B**, **Turbocharging**, **Intercooler air inlet pipe: Removal - Refitting**, page **12B-41**) .

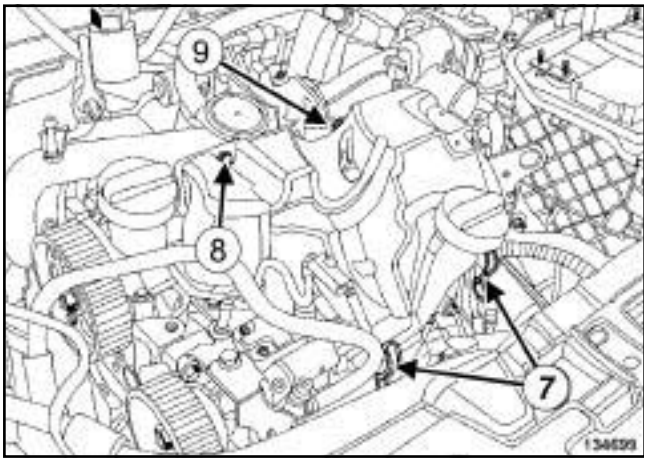

134699

❑ Unclip the injector rail protector cover at (**7**) .

❑ Remove:

- the injector rail protector cover bolt (**8**) ,
- the injector rail protector cover nut (**9**) ,
- the injection rail protector cover,

❑ Unclip the diesel fuel injector wiring from the rocker cover.

K9K, and 832

II - OPERATION FOR REMOVAL OF PART CONCERNED

134706

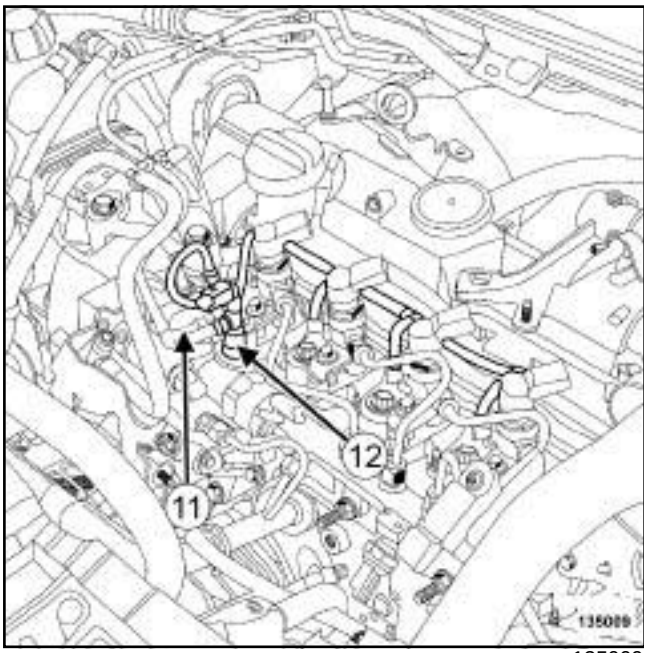

135009

❑ Disconnect:

- the fuel temperature sensor connector (**10**) ,
- the diesel fuel return pipe from the diesel injector fuel return rail (**11**) .

❑ Fit a suitable blanking plug to:

- the diesel fuel return pipe opening,
- the opening of the diesel injector fuel return rail.

❑ Disconnect the diesel injector fuel return rail from the high pressure pump (**12**) .

❑ Fit a suitable blanking plug to:

- the opening of the diesel injector fuel return rail,
- the high pressure pump opening.

First step for removing the fuel return rail unions from the diesel injectors

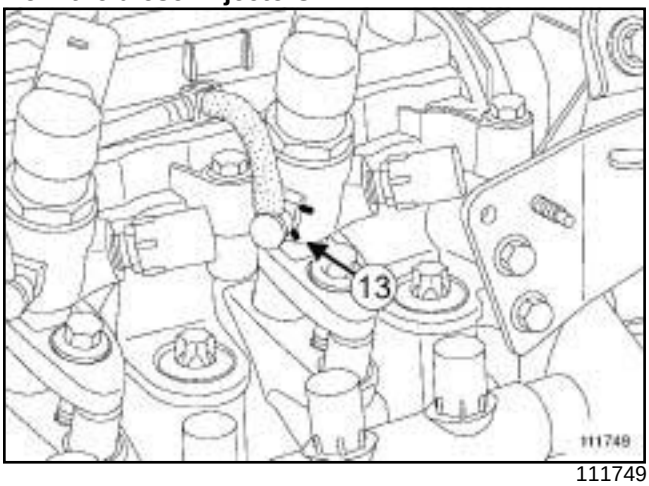

111749

❑

> **WARNING**
>
> Ensure that the clip is not completely removed from its housing, otherwise it may be damaged when the diesel return union is removed.
>
> In the case where a clip has been completely removed from its housing, remove the injector concerned and replace the clip with a new clip (see **13B**, **Diesel injection**, **Diesel injector: Removal - Refitting**, page **13B-136**) .

❑ Using a fine, flat screwdriver, push the lower sections of the diesel injector fuel return rail unions (**13**) towards the rocker cover to unlock them and position them fully up against the rocker cover.

K9K, and 832

Second step for removing the fuel return rail unions from the diesel injectors

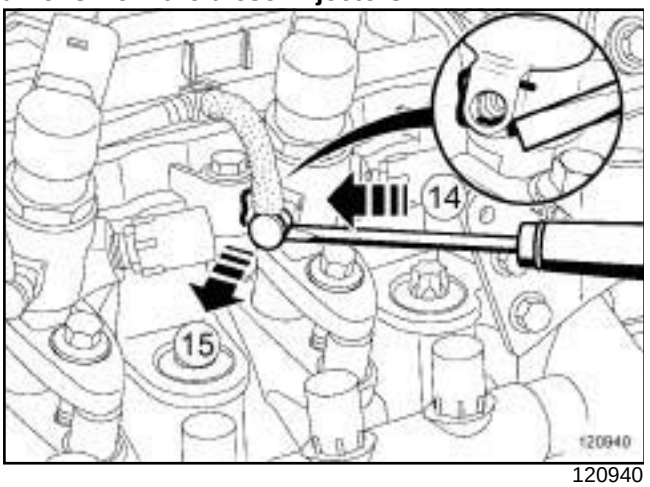

120940

❑

> Note:
>
> With sufficient force applied to the clip while pressing continuously with the screwdriver, the diesel fuel injector fuel return rail unions will come out effortlessly.

> **WARNING**
>
> Do not use the screwdriver as a lever on the injector fuel return unions.

❑ Using a fine, flat blade screwdriver, push the lower sections of the retaining clips that are up against the rocker cover downwards (**14**) without fully releasing the clips from their injectors.

❑ By hand, remove the diesel fuel return rail unions from the diesel injectors at (**15**) , while pressing (**14**) on the lower tabs of the retaining clips using a thin, flat-blade screwdriver.

❑ Fit a suitable blanking plug to:

- each diesel injector fuel return rail union,
- the opening of each diesel injector.

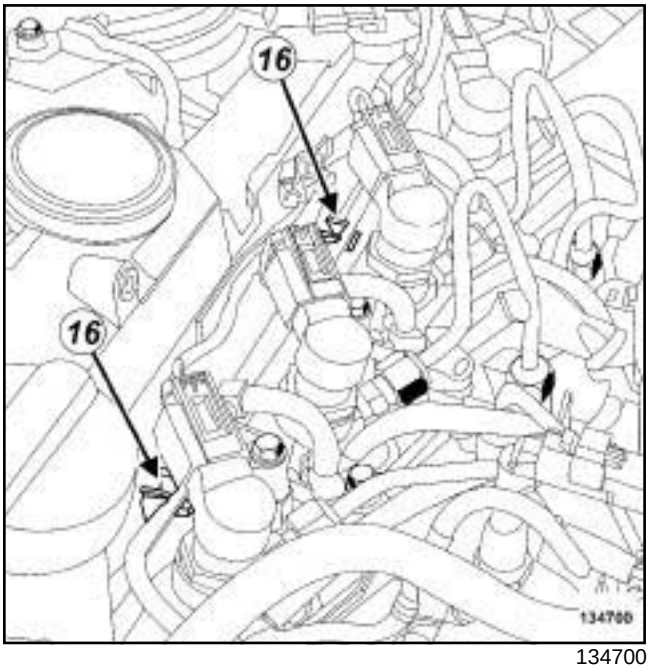

134700

❑ Unclip the diesel injector fuel return rail from the rocker cover at (**16**) .

> Note:
>
> If the fuel return rail is to be re-used, keep it in a sealed plastic bag during the removal operation.

❑ Remove the diesel injector fuel return rail.

REFITTING

I - REMOVAL PREPARATION OPERATION

❑

> **WARNING**
>
> Check the condition of the seals on the fuel return unions on the injectors. Check that they are not cut or crushed, and have not come out of their grooves. Replace the diesel return pipe assembly if one of its components is damaged.

II - REFITTING OPERATION FOR PART CONCERNED

❑ Push the diesel injector fuel return rail union clips towards the front of the vehicle to place them in their initial position.

❑ Remove the blanking plugs from:

- the opening of each diesel injector,
- each diesel injector fuel return rail union.

K9K, and 832

- ❑ Lubricate the unions of the diesel injector fuel return rail using **SILICONE-FREE LUBRICANT** (see **Vehicle: Parts and ingredients for the repairwork**) (04B, Consumables - Products) so that the seals are completely covered with product.
- ❑ Position the unions of the diesel injector fuel return rail in front of the opening of each diesel injector, starting with injector number **4** (timing end).
- ❑ Clip the unions of the diesel injector fuel return rail onto the opening of each diesel injector, starting with injector number **4** (timing end).

> Note:
>
> Check that the fuel return rail unions are correctly clipped in place.

- ❑ Remove the blanking plugs from:
  - the opening of the diesel injector fuel return rail,
  - the high pressure pump opening.
- ❑ Connect the diesel injector fuel return rail to the high pressure pump.
- ❑ Remove the blanking plugs from:
  - the opening of the diesel injector fuel return rail,
  - the diesel return pipe opening.
- ❑ Connect:
  - the diesel fuel return pipe to the diesel injector fuel return rail,
  - the fuel temperature sensor connector.

III - FINAL OPERATION

- ❑ Clip the diesel injector wiring onto the rocker cover.
- ❑ Refit the injector rail protector cover.
- ❑ Clip the injector rail protector cover into place.
- ❑ Refit the turbocharger air outlet pipe (see **12B**, **Turbocharging**, **Intercooler air inlet pipe: Removal - Refitting**, page **12B-41**) .
- ❑ Fit the intercooler air outlet pipe.
- ❑ Connect the intercooler air outlet pipe on the damper valve.
- ❑ Torque tighten the **intercooler air outlet pipe clip on the damper valve (5.5 N.m)**.
- ❑ Clip the turbocharger pressure sensor wiring onto the intercooler air outlet pipe.
- ❑ Connect the turbocharger pressure sensor connector.
- ❑ Clip the wiring for the damper valve onto the injector rail protector cover plate.
- ❑ Connect:
  - the camshaft position sensor connector,
  - the connector to the damper flap.
- ❑ Refit the engine cover.
- ❑ Connect the battery (see **Battery : Removal - Refitting**) (80A, Battery).
- ❑ Check that there are no diesel leaks.

F9Q

REMOVAL

I - REMOVAL PREPARATION OPERATION

❑ Disconnect the battery (see **Battery: Removal - Refitting**) (80A, Battery).

❑ Remove the front engine cover.

II - OPERATION FOR REMOVAL OF PART CONCERNED

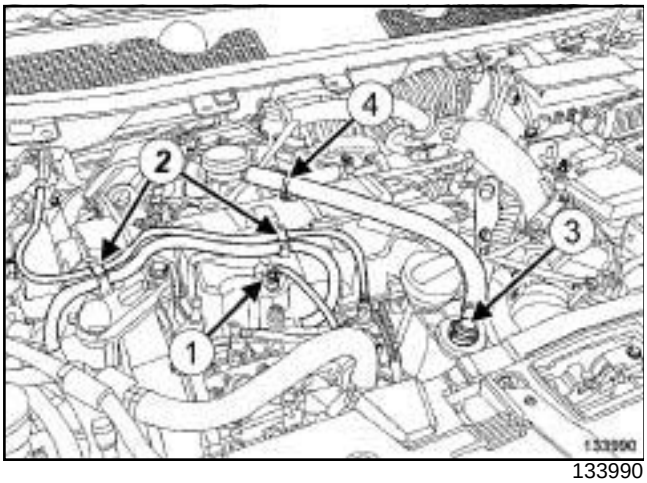

133990

❑ Disconnect the injector rail pressure sensor connector (**1**) .

❑ Unclip the fuel pipes (**2**) .

❑ Disconnect the hose from the oil separator (**3**) .

❑ Unclip the oil separator hose (**4**) from the injector rail protector.

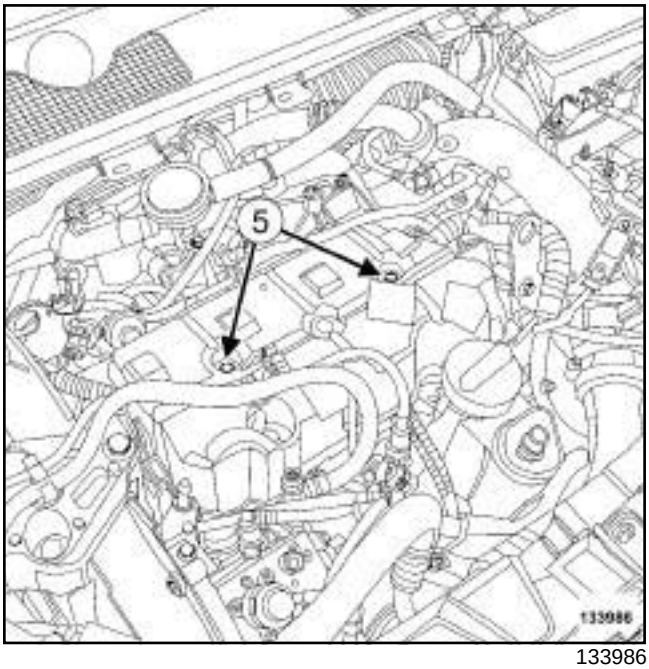

133986

❑ Remove:

- the bolts (**5**) from the injector rail protector,
- the injector rail protector.

REFITTING

I - REFITTING OPERATION FOR PART CONCERNED

❑ Refit the injector rail protector.

❑ Clip:

- the oil separator hose on the injector rail protector,
- the fuel pipes.

❑ Connect:

- the oil separator hose,
- the injector rail pressure sensor connector.

II - FINAL OPERATION

❑ Refit the engine cover.

❑ Connect the battery (see **Battery : Removal - Refitting**) (80A, Battery).

F9Q

Essential special tooling	
Mot. 1566	Spanner for removing high pressure pipes.

Tightening torques ▽	
nut on the high pressure pipe between the pump and the rail at the high pressure pump end	**27 N.m**
nut on the high pressure pipe between the pump and the rail at the injector rail end	**37 N.m**

IMPORTANT
To avoid all risk of damage to the systems, apply the safety and cleanliness instructions and operation recommendations before carrying out any repair (see **13B**, **Diesel injection**, **Diesel injection: Precautions for repair**, page **13B-1**) .

REMOVAL

I - REMOVAL PREPARATION OPERATION

❑ Disconnect the battery (see **Battery: Removal - Refitting**) (80A, Battery).

❑ Remove:

- the engine cover,
- the injector rail protector (see **13B**, **Diesel injection**, **Injector rail protector: Removal - Refitting**, page **13B-70**) .

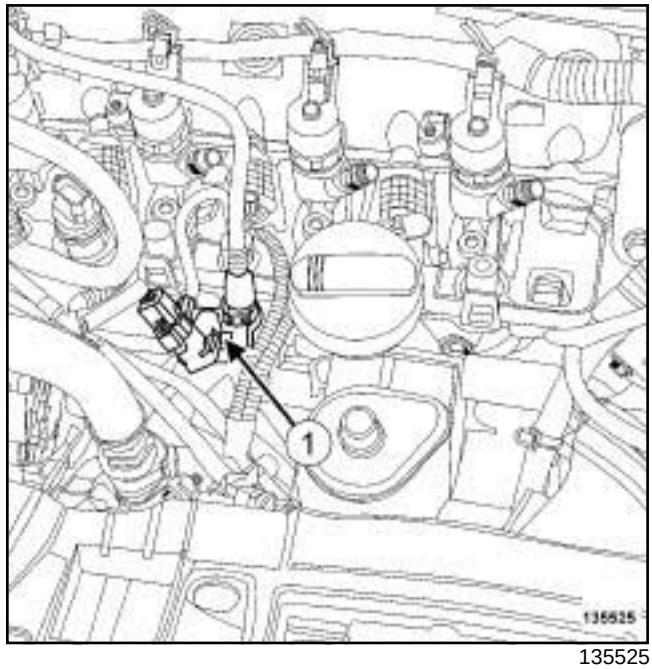

135525

❑ Unclip the fuel temperature sensor (**1**) from its support.

II - OPERATION FOR REMOVAL OF PART CONCERNED

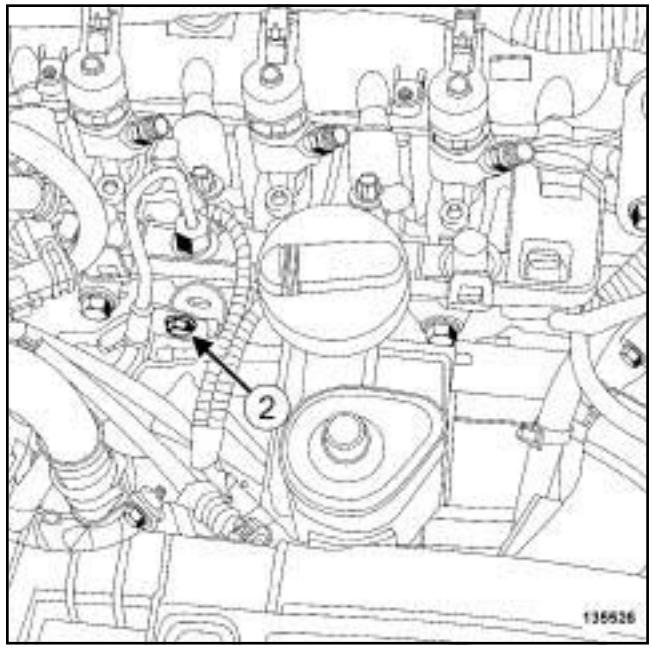

135526

❑ Remove the bolt (**2**) for the pipe between the pump and the rail.

F9Q

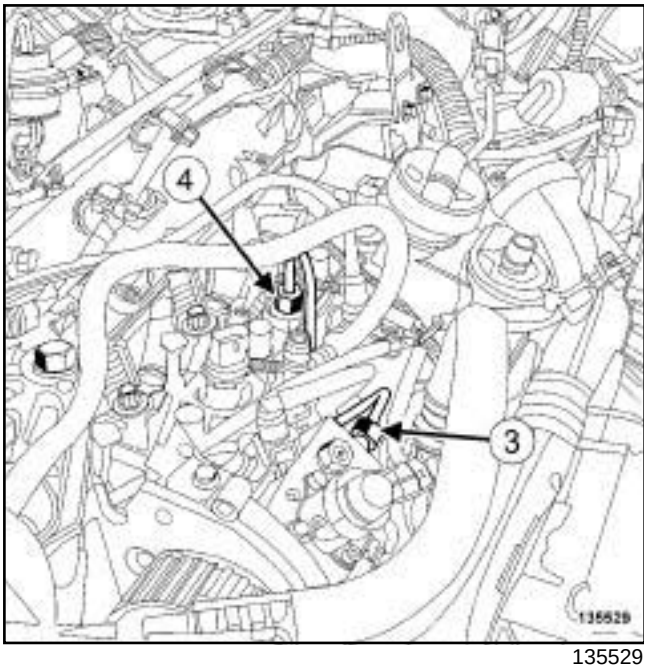

135529

❑ Clean the high pressure pipe nuts between the pump and the rail (see **13B**, **Diesel injection**, **Diesel injection: Precautions for repair**, page **13B-1**) .

> **WARNING**
> Prepare for the flow of fluid, and protect the surrounding components.

❑ Remove:

- the nut (**3**) for the high pressure pipe between the pump and the rail at the high pressure pump end, using the tool **(Mot. 1566)**,
- the nut (**4**) for the high pressure pipe between the pump and the rail at the injector rail end, using the tool **(Mot. 1566)**,
- the high pressure pipe between the pump and the rail.

> **WARNING**
> To prevent impurities from entering the circuit, place protective plugs on all fuel circuit components exposed to the open air.

❑ Fit blanking plugs on:

- the high pressure pump opening,
- the injector rail opening.

REFITTING

I - REFITTING PREPARATION OPERATION

❑ **parts always to be replaced: High-pressure pipe between the pump and rail (11,05,03,02)**.

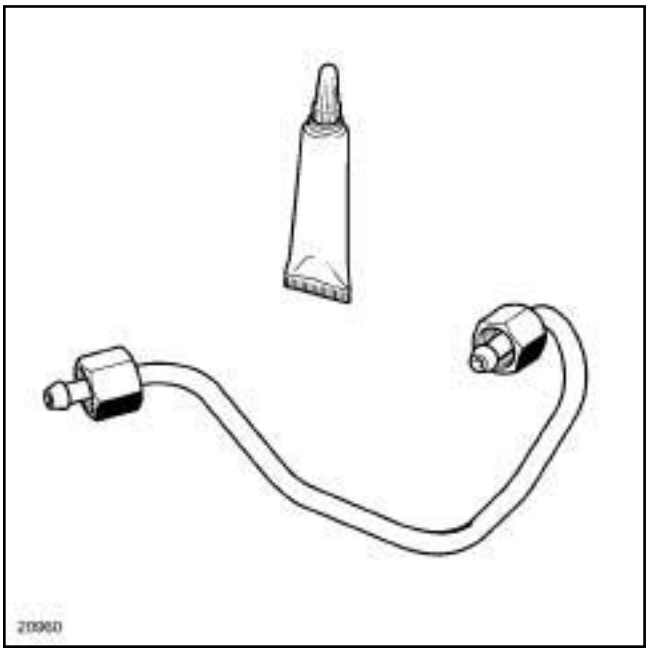

20960

❑

> **WARNING**
> Before fitting a new high pressure pipe, lightly lubricate the nut threads with the oil from the applicator provided in the new parts kit.
>
> Be careful not to allow oil into the high pressure pipe.
>
> Do not lubricate high pressure pipes supplied without an applicator, as these high pressure pipes are self-lubricating.

> **WARNING**
> Do not remove the blanking plugs from each component until the last moment.
>
> Also, do not remove the components from their packaging until they are to be fitted to the vehicle.

II - REFITTING OPERATION FOR PART CONCERNED

❑ Remove the blanking plugs from:

- the injector rail opening,
- the high pressure pump opening.

F9Q

- ❏ Refit the high pressure pipe between the pump and the injector rail.
- ❏ Tighten to torque:
  - the **nut on the high pressure pipe between the pump and the rail at the high pressure pump end (27 N.m)** using the tool **(Mot. 1566)**,
  - the **nut on the high pressure pipe between the pump and the rail at the injector rail end (37 N.m)** using the tool **(Mot. 1566)**.
- ❏ Refit the bolt for the high pressure pipe between the pump and the rail.

III - FINAL OPERATION

- ❏ Attach the fuel temperature sensor to its mounting.
- ❏ Remove:
  - the injector rail protector (see **13B**, **Diesel injection**, **Injector rail protector: Removal - Refitting**, page **13B-70**) ,
  - the engine cover.
- ❏ Connect the battery (see **Battery : Removal - Refitting**) (80A, Battery).

K9K, and 830

Essential special tooling	
Mot. 1746	Offset spanner for tightening high pressure pump pipes.

Tightening torques ▽	
nuts for the high pressure pipe between the high pressure pump and the injector rail	**28 N.m**
injector rail nuts	**28 Nm**

IMPORTANT
To avoid all risk of damage to the systems, apply the safety and cleanliness instructions and operation recommendations before carrying out any repair (see **13B**, **Diesel injection**, **Diesel injection: Precautions for repair**, page **13B-1**)

IMPORTANT
Wear leaktight gloves (Nitrile type) for this operation.

REMOVAL

I - REMOVAL PREPARATION OPERATION

❑ Remove the front engine cover.

❑ Disconnect the battery (see **Battery: Removal - Refitting**) (80A, Battery).

❑ Remove the turbocharger outlet air pipe (see **12B**, **Turbocharging**, **Intercooler air inlet pipe: Removal - Refitting**, page **12B-41**) .

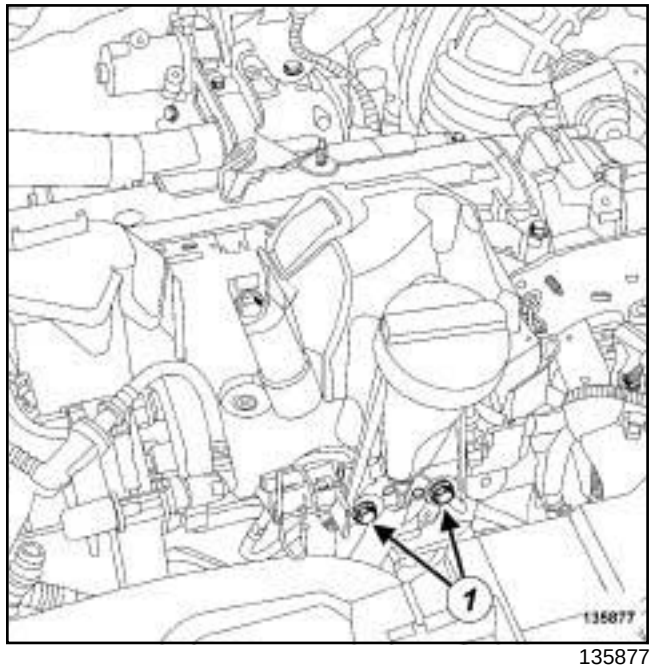

135877

❑ Remove:

- the dipstick,
- the dipstick guide bolts (**1**) .

❑ Move aside the dipstick guide.

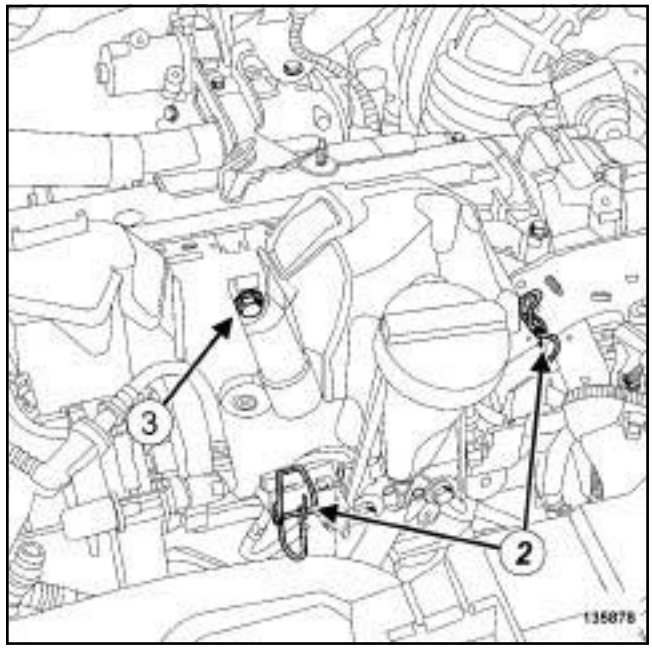

135878

❑ Unclip the injector rail protector cover at (**2**) .

❑ Remove

- the injector rail protector cover bolt (**3**) ,
- the injection rail protector cover,

K9K, and 830

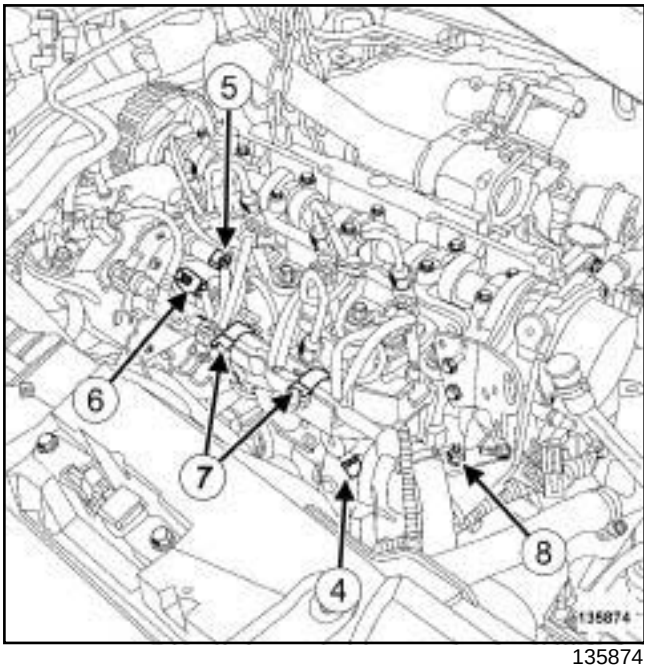

135874

❑ Disconnect:

- the connector (**4**) from the injector rail pressure sensor,
- the fuel temperature sensor connector (**5**) ,
- the connector (**6**) for the fuel flow regulation solenoid valve,
- all heater plug connectors,
- the connector for each diesel injector.

❑ Unclip the injection wiring clips (**7**) .

❑ Remove the nut (**8**) from the injection wiring bracket.

❑ Move aside the injection wiring.

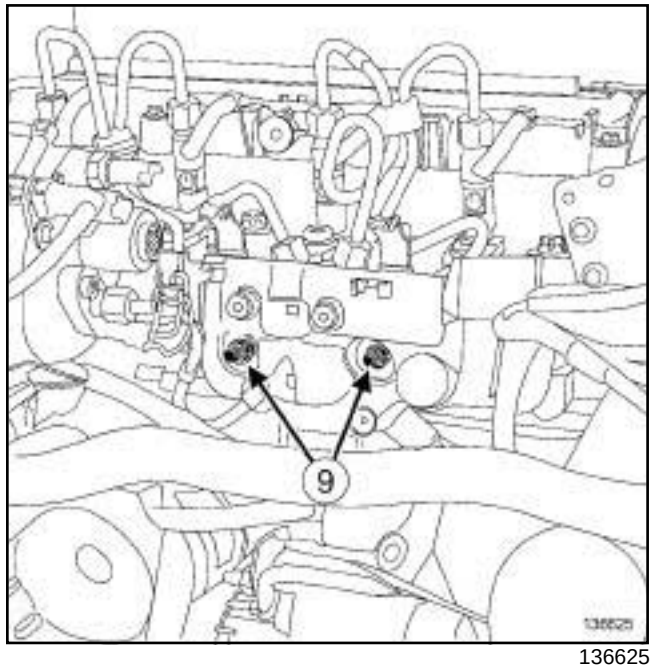

136625

❑ Remove:

- the nuts (**9**) from the injector rail protector,
- the injector rail protector.

II - OPERATION FOR REMOVAL OF PART CONCERNED

❑ Clean the unions of the high pressure pipes between the high pressure pump and the injector rail (see **13B**, **Diesel injection**, **Diesel injection: Precautions for repair**, page **13B-1**)

WARNING

To avoid any corrosion or damage, protect the areas on which fuel is likely to run.

K9K, and 830

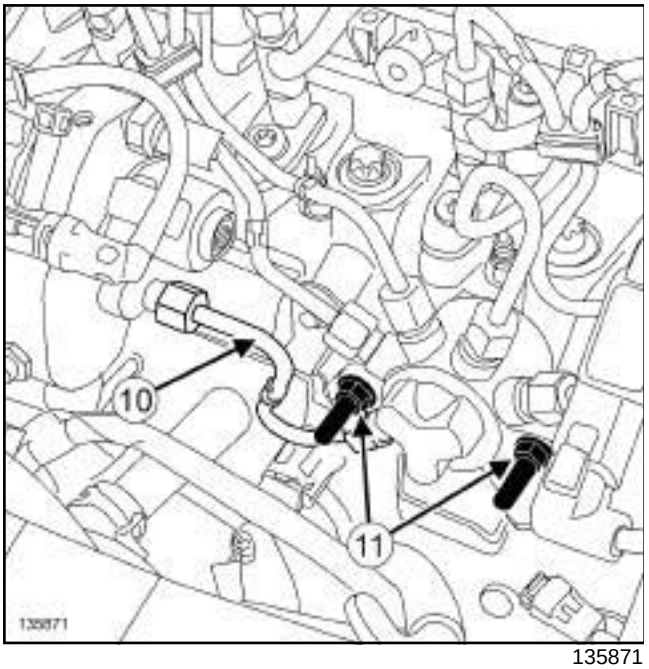

135871

❑

WARNING

Always hold the intermediate injector union in place with a wrench when loosening the high pressure pipes.

Do not damage the injector return nozzle.

❑ Undo the injector rail nuts (**10**) .

❑ Remove the high pressure pipe (**11**) between the high pressure pump and the injector rail.

❑ Place a suitable blanking plug on:

- the high pressure pump opening,
- the injector rail opening.

REFITTING

I - REFITTING PREPARATION OPERATION

20960

❑

WARNING

Before fitting a new high pressure pipe, lightly lubricate the nut threads with the oil from the applicator provided in the new parts kit.

Be careful not to allow oil into the high pressure pipe.

Do not lubricate high pressure pipes supplied without an applicator, as these high pressure pipes are self-lubricating.

WARNING

Do not remove the blanking plugs from each component until the last moment.

Also, do not remove the components from their packaging until they are to be fitted to the vehicle.

❑ **parts always to be replaced: High-pressure pipe between the pump and rail (11,05,03,02)**.

II - REFITTING OPERATION FOR PART CONCERNED

❑ Remove the blanking plug from:

- the high pressure pump opening,
- the injector rail opening.

K9K, and 830

- ❑ Fit the new high pressure pipe between the injector rail and the high pressure pump.
- ❑ Screw on the nuts for the high pressure pipe between the high pressure pump and the injector rail by hand without tightening, starting at the injector rail end.
- ❑ Using the tool **(Mot. 1746)**, torque tighten the **nuts for the high pressure pipe between the high pressure pump and the injector rail (28 N.m)**.
- ❑ Torque tighten the **injector rail nuts (28 Nm)**.

III - FINAL OPERATION

- ❑ Refit the injector rail protector.
- ❑ Fit the injection wiring.
- ❑ Refit the injection wiring bracket nut.
- ❑ Clip on the injection wiring clip.
- ❑ Connect:
  - the connector for each diesel injector,
  - all heater plug connectors,
  - the connector for the fuel flow regulation solenoid valve,
  - the fuel temperature sensor connector,
  - the injector rail pressure sensor connector.
- ❑ Refit:
  - the injector rail protector cover,
  - the injection rail protector cover bolt.
- ❑ Clip on the injector rail protector cover plate.
- ❑ Fit the dipstick guide tube.
- ❑ Refit:
  - the dipstick guide bolts,
  - the dipstick.
- ❑ Refit the turbocharger air outlet pipe (see **12B**, **Turbocharging**, **Intercooler air inlet pipe: Removal - Refitting**, page **12B-41**) .
- ❑ Connect the battery (see **Battery : Removal - Refitting**) (80A, Battery).
- ❑ Refit the engine cover.
- ❑ Reprime the fuel circuit using the manual priming pump.
- ❑ Check that there are no diesel leaks (see **High pressure pipe: Checking**) .

K9K, and 832

Essential special tooling	
Mot. 1566	Spanner for removing high pressure pipes.
Mot. 1746	Offset spanner for tightening high pressure pump pipes.

Tightening torques ▽	
nuts for the high pressure pipe between the high pressure pump and the injector rail	**28 N.m**
intercooler air outlet pipe clip on the damper valve	**5.5 N.m**

IMPORTANT
To avoid all risk of damage to the systems, apply the safety and cleanliness instructions and operation recommendations before carrying out any repair (see **13B**, **Diesel injection**, **Diesel injection: Precautions for repair**, page **13B-1**) .

IMPORTANT
Wear leaktight gloves (Nitrile type) for this operation.

REMOVAL

I - REMOVAL PREPARATION OPERATION

❑ Disconnect the battery (see **Battery: Removal - Refitting**) (80A, Battery).

❑ Remove the front engine cover.

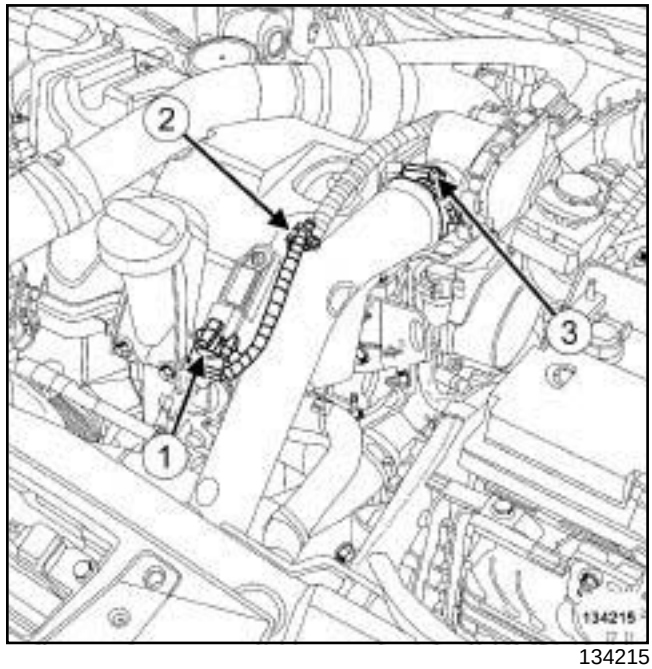

134215

❑ Disconnect the turbocharger pressure sensor connector (**1**) .

❑ Unclip the wiring for the turbocharging pressure sensor from the intercooler air outlet pipe at (**2**) .

❑ Loosen the damper valve clip (**3**) from the intercooler air outlet pipe.

❑ Disconnect the intercooler air outlet pipe from the damper valve.

❑ Remove the intercooler air outlet pipe from the damper valve.

K9K, and 832

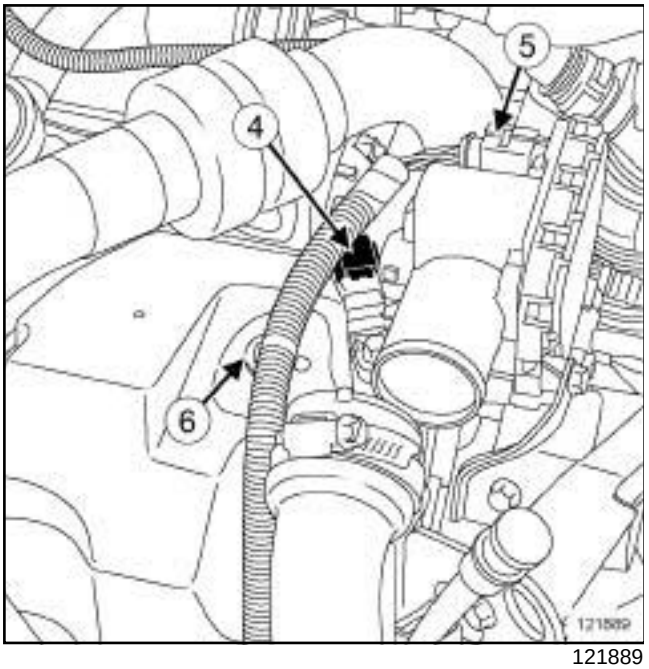

121889

❑ Disconnect:

- the damper valve connector (**4**) ,
- the connector (**5**) from the camshaft position sensor.

❑ Unclip the damper valve wiring from the injector rail protector cover plate at (**6**) .

❑ Remove the turbocharger outlet air pipe (see **12B**, **Turbocharging**, **Intercooler air inlet pipe: Removal - Refitting**, page **12B-41**) .

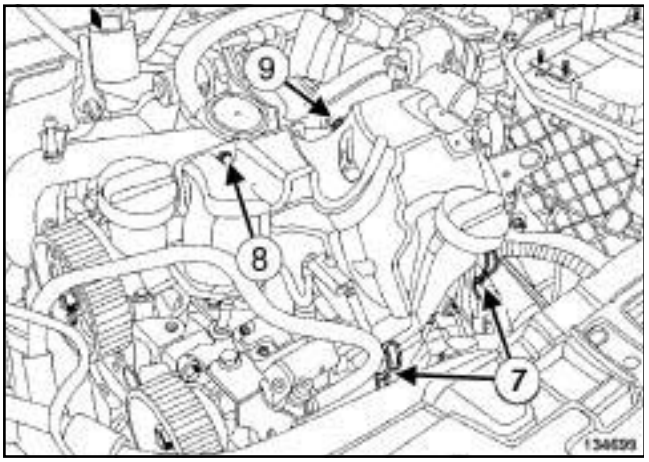

134699

❑ Unclip the injector rail protector cover at (**7**) .

❑ Remove:

- the injector rail protector cover bolt (**8**) ,
- the injector rail protector cover nut (**9**) ,
- the injector rail protector cover,

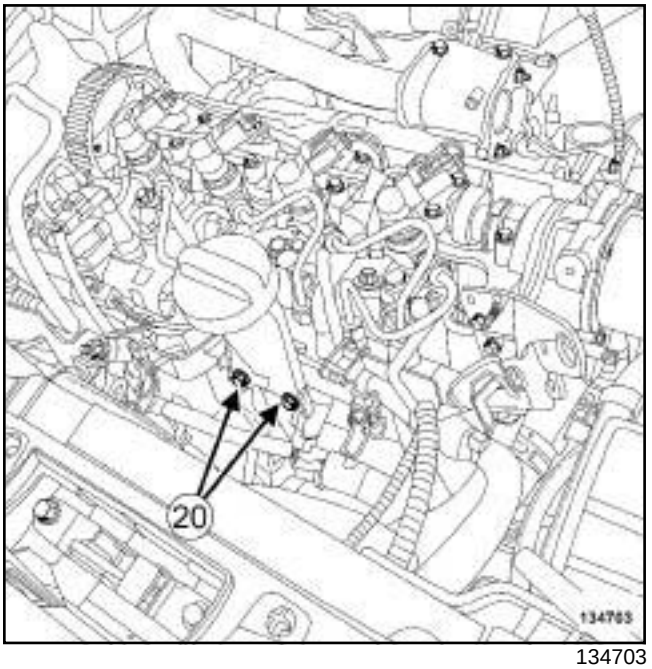

134703

❑ Remove:

- the dipstick,
- the dipstick guide bolts (**20**) .

❑ Move aside the dipstick guide.

K9K, and 832

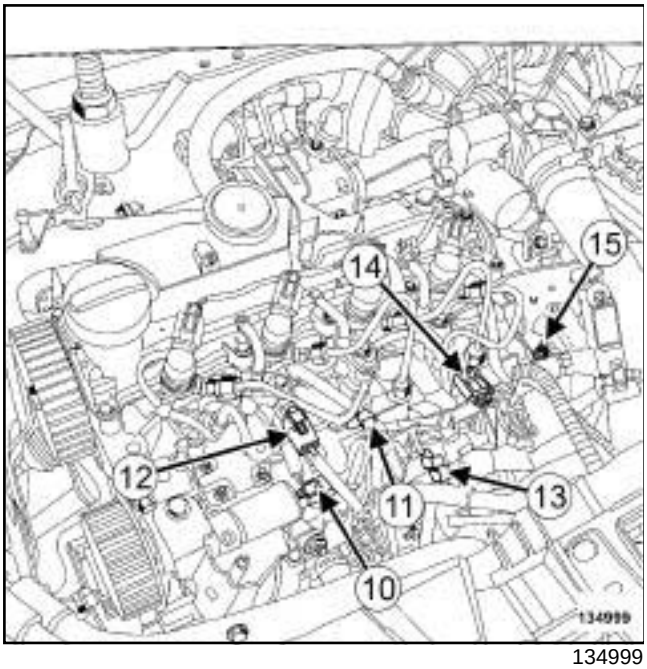

134999

❑ Unclip the diesel injector wiring from the rocker cover.

❑ Disconnect:

- all heater plug connectors,
- the connector for each diesel injector,
- the connector (**10**) for the fuel pressure regulation solenoid valve,
- the connector (**11**) for the fuel flow regulation solenoid valve,
- the fuel temperature sensor connector (**12**) ,
- the connector (**13**) for the injector rail pressure sensor.

❑ Unclip the injection wiring clip (**14**) .

❑ Remove the nut (**15**) from the injection wiring bracket.

❑ Move aside the injection wiring.

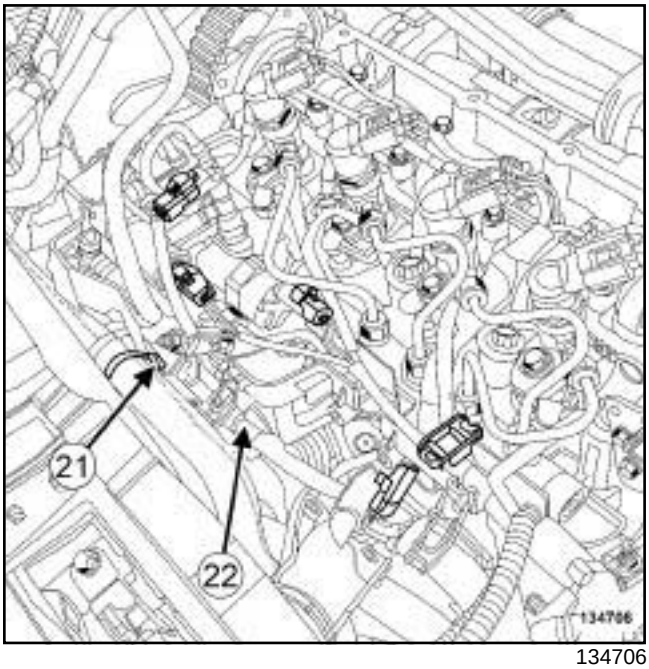

134706

❑ Unclip:

- the alternator wiring (**21**) from the injector rail protector,
- the expansion bottle lower cooling hose from the injection pump protector.

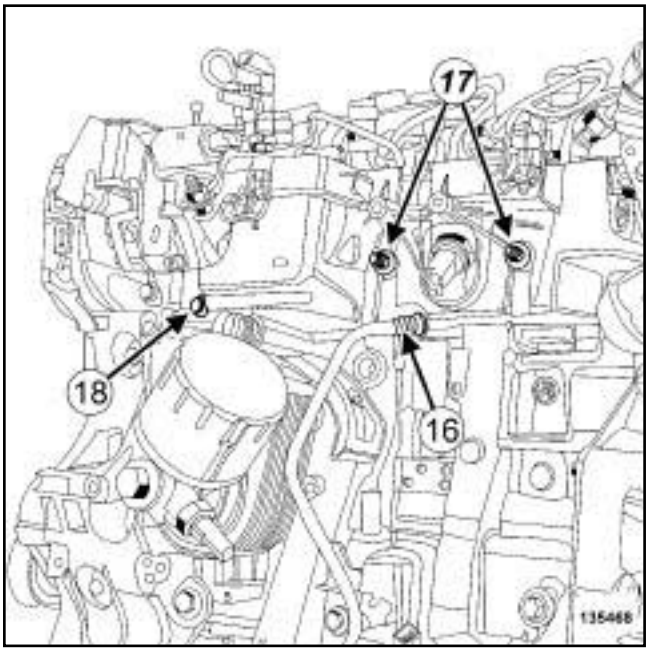

135468

❑ Disconnect the fuel drain pipe from the injector rail protector (**16**) .

❑ Move the fuel drain pipe aside.

❑ Remove:

- the nuts (**17**) from the injector rail protector,

K9K, and 832

- the injector rail protector bolt (**18**) ,
- the injector rail protector.

II - OPERATION FOR REMOVAL OF PART CONCERNED

❑ Clean the unions of the high pressure pipe between the high pressure pump and the injector rail (see **13B**, **Diesel injection**, **Diesel injection: Precautions for repair**, page **13B-1**) .

> **WARNING**
> To avoid any corrosion or damage, protect the areas on which fuel is likely to run.

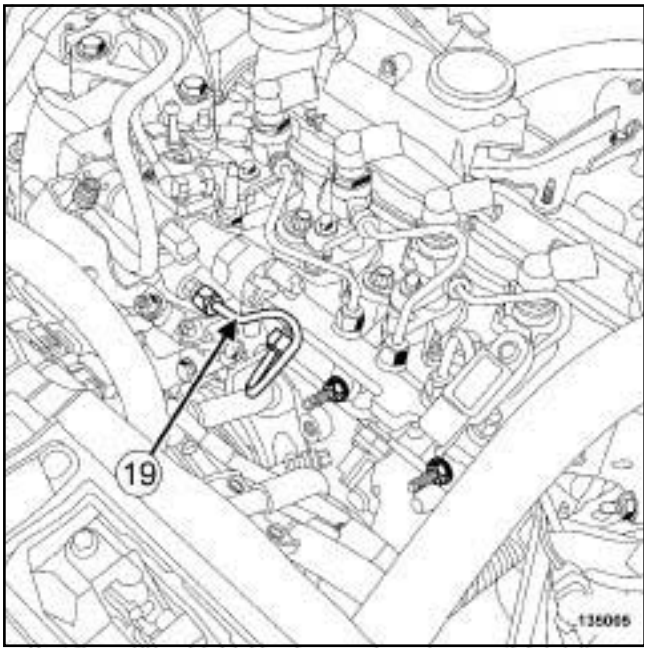

135005

❑ Remove the high pressure pipe between the high pressure pump and the injector rail (**19**) .

> Note:
> It is essential to use a spanner to hold the high pressure pump intermediate union when loosening the high pressure pipe.

❑ Place a suitable blanking plug on:

- the high pressure pump opening,
- the injector rail opening.

REFITTING

I - REFITTING PREPARATION OPERATION

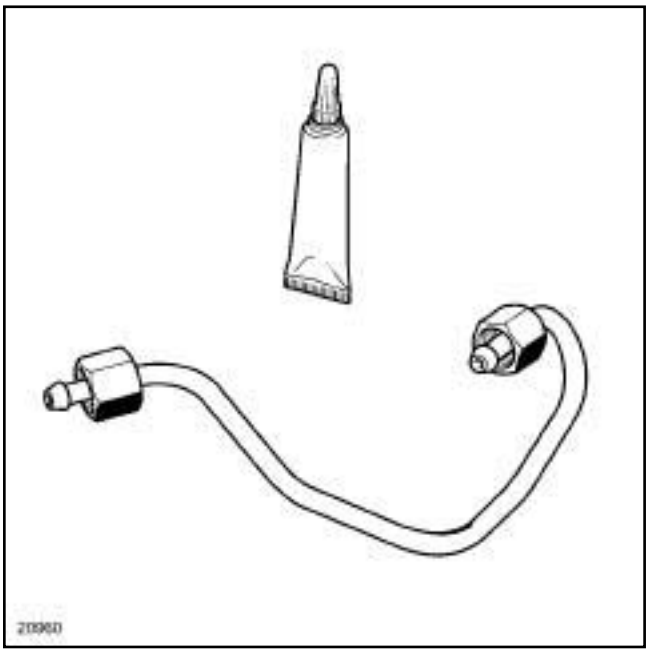

20960

❑

> **WARNING**
> Before fitting a new high pressure pipe, lightly lubricate the nut threads with the oil from the applicator provided in the new parts kit.
>
> Be careful not to allow oil into the high pressure pipe.
>
> Do not lubricate high pressure pipes supplied without an applicator, as these high pressure pipes are self-lubricating.

❑ **parts always to be replaced: High-pressure pipe between the pump and rail (11,05,03,02)**.

II - REFITTING OPERATION FOR PART CONCERNED

❑ Remove the blanking plugs from:

- the high pressure pump opening,
- the injector rail opening.

❑ Fit the new high pressure pipe between the injector rail and the high pressure pump.

> Note:
> If the set of new pipes does not contain an applicator, do not lubricate the threads of the high pressure pipe (as they are self-lubricating pipes).

K9K, and 832

- ❑ Screw on by hand, without tightening, until contact is made with the nuts of the high pressure pipe between the high pressure pump and the injector rail, starting at the injector rail end.
- ❑ Using the tool **(Mot. 1566)** or the tool **(Mot. 1746)**, torque tighten the **nuts for the high pressure pipe between the high pressure pump and the injector rail (28 N.m)**.

III - FINAL OPERATION

- ❑ Refit the injector rail protector.
- ❑ Fit the fuel drain pipe.
- ❑ Connect the fuel drain pipe to the injector rail protector.
- ❑ Fit the injection wiring.
- ❑ Refit the injection wiring bracket nut.
- ❑ Clip on the injection wiring clip.
- ❑ Refit:
  - injector rail pressure sensor connector,
  - the fuel temperature sensor connector,
  - the connector for the fuel flow regulation solenoid valve,
  - the connector for the fuel pressure regulation solenoid valve,
  - the connector for each diesel injector,
  - all heater plug connectors.
- ❑ Clip the diesel injector wiring onto the rocker cover.
- ❑ Fit the dipstick guide tube.
- ❑ Refit:
  - the dipstick guide bolts,
  - the dipstick,
  - the injection rail protector cover,
- ❑ Clip on the injector rail protector cover.
- ❑ Refit the turbocharger air outlet pipe (see **12B**, **Turbocharging**, **Intercooler air inlet pipe: Removal - Refitting**, page **12B-41**) .
- ❑ Fit the intercooler air outlet pipe.
- ❑ Connect the intercooler air outlet pipe on the damper valve.
- ❑ Torque tighten the **intercooler air outlet pipe clip on the damper valve (5.5 N.m)**.
- ❑ Clip the turbocharger pressure sensor wiring onto the intercooler air outlet pipe.
- ❑ Connect the turbocharger pressure sensor connector.
- ❑ Clip the wiring for the damper valve onto the injector rail protector cover plate.
- ❑ Connect:
  - the camshaft position sensor connector,
  - the connector to the damper flap.
- ❑ Refit the engine cover.
- ❑ Connect the battery (see **Battery : Removal - Refitting**) (80A, Battery).
- ❑ Check that there are no diesel leaks.

K9K, and 834

Essential special tooling	
Mot. 1566	Spanner for removing high pressure pipes.

Tightening torques ▽	
nut for the high pressure pipe between the high pressure pump and the injector rail on the high pressure pump	**28 N.m**
nut for the high pressure pipe between the high pressure pump and the injector rail on the injector rail	**28 N.m**

IMPORTANT
Wear leaktight gloves (Nitrile type) for this operation.

IMPORTANT
To avoid all risk of damage to the systems, apply the safety and cleanliness instructions and operation recommendations before carrying out any repair (see **13B**, **Diesel injection**, **Diesel injection: Precautions for repair**, page **13B-1**) .

WARNING
To avoid any corrosion or damage, protect the areas on which fuel is likely to run.

REMOVAL

I - REMOVAL PREPARATION OPERATION

❑ Disconnect the battery (see **Battery: Removal - Refitting**) (80A, Battery).

❑ Remove the front engine cover.

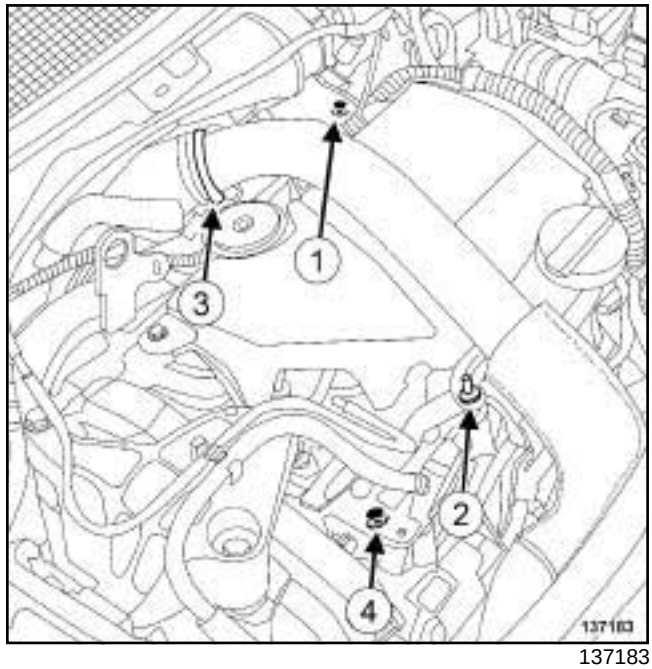

137183

❑ Remove:

- the bolt (**1**) for the intermediate air pipe between the turbocharger and the intercooler,
- the nut (**2**) for the intermediate air pipe between the turbocharger and the intercooler.

❑ Pull the clip (**3**) from the turbocharger air outlet pipe.

❑ Remove the intermediate air pipe between the turbocharger and the intercooler from the turbocharger air outlet pipe.

❑ Remove:

- the bolt (**4**) from the retaining bracket of the intermediate air pipe between the turbocharger and the intercooler,
- the retaining bracket for the intermediate air pipe between the turbocharger and the intercooler.
- the seal from the turbocharger air outlet pipe.

K9K, and 834

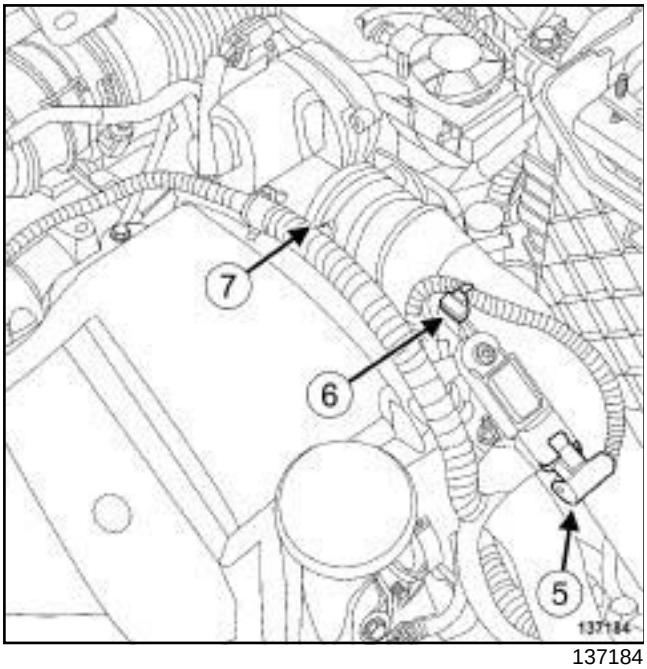

137184

- ❑ Disconnect the turbocharger pressure sensor connector (**5**) .
- ❑ Unclip the cable for the turbocharging pressure sensor from the intercooler air outlet pipe (**6**) .
- ❑ Pull the clip (**7**) from the intercooler air outlet pipe.
- ❑ Move the intercooler outlet air pipe to one side.
- ❑ Remove the seal from the intercooler air outlet pipe.

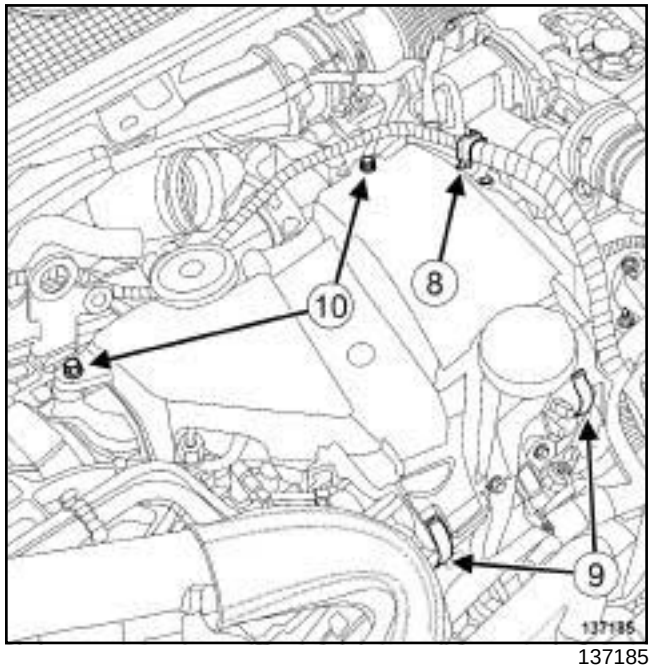

137185

- ❑ Unclip the wiring for the damper valve from the injector rail protector at (**8**) .
- ❑ Unclip the injector rail protector cover at (**9**) .
- ❑ Remove:
  - the bolts (**10**) from the injector rail protector cover plate,
  - the injector rail protector.

II - OPERATION FOR REMOVAL OF PART CONCERNED

- ❑ Clean the nuts of the high pressure pipe between the high pressure pump and the injector rail (see **13B**, **Diesel injection**, **Diesel injection: Precautions for repair**, page **13B-1**) .

K9K, and 834

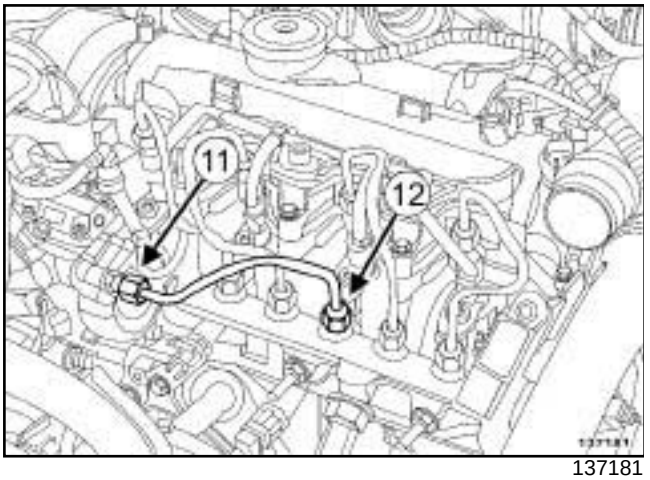

137181

❑ Remove:

- the nut (**11**) of the high pressure pipe between the high pressure pump and the injector rail from the high pressure pump,
- the nut (**12**) of the high pressure pipe between the high pressure pump and the injector rail from the injector rail,
- the high pressure pipe between the high pressure pump and the injector rail.

> Note:
>
> It is essential to use a spanner to hold the high pressure pump intermediate union when loosening the high pressure pipe.

❑ Fit a suitable blanking plug to:

- the high pressure pump opening,
- the high pressure rail opening.

REFITTING

I - REFITTING PREPARATION OPERATION

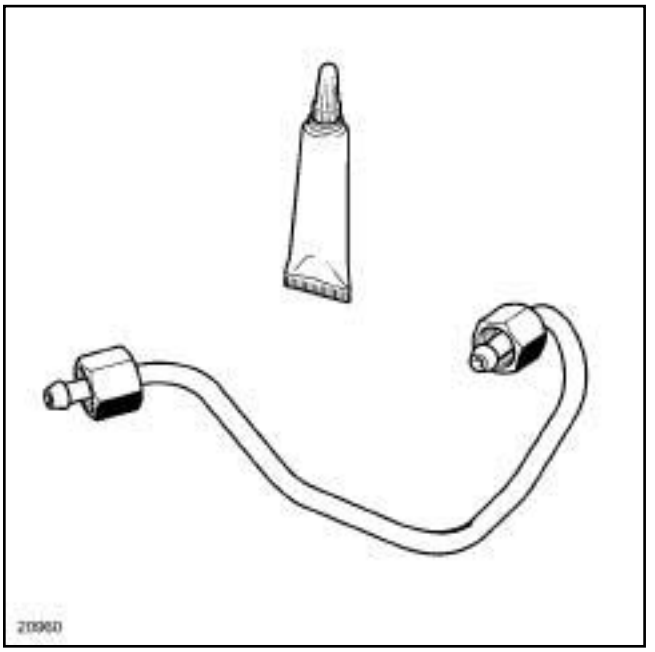
20960

❑

> **WARNING**
>
> Before fitting a new high pressure pipe, lightly lubricate the nut threads with the oil from the applicator provided in the new parts kit.
>
> Be careful not to allow oil into the high pressure pipe.
>
> Do not lubricate high pressure pipes supplied without an applicator, as these high pressure pipes are self-lubricating.

❑ **parts always to be replaced: High-pressure pipe between the pump and rail (11,05,03,02)**.

❑ **parts always to be replaced: turbocharger air cooler air outlet pipe seal (10,09,04,05)**.

❑ Always replace the seal for the turbocharger air outlet pipe.

❑ Refit:

- a seal to the air outlet pipe of the new turbocharger inside the turbocharger air outlet pipe,
- a seal to the air outlet pipe of the new intercooler inside the intercooler air outlet pipe.

K9K, and 834

II - REFITTING OPERATION FOR PART CONCERNED

❏ Remove the blanking plug from:

- the high pressure pump opening,
- the high pressure rail opening.

❏ Fit a high-pressure pipe between the high pressure pump and the new injector rail.

> Note:
>
> If the set of new pipes does not contain an applicator, do not lubricate the threads of the high pressure pipe (as they are self-lubricating pipes).

❏ Screw on by hand, without tightening, until contact is made by the nuts of the high pressure pipe between the high pressure pump and the injector rail, starting at the injector rail end.

❏ Tighten to torque:

- the **nut for the high pressure pipe between the high pressure pump and the injector rail on the high pressure pump (28 N.m)** using the tool **(Mot. 1566)**,
- the **nut for the high pressure pipe between the high pressure pump and the injector rail on the injector rail (28 N.m)** using the tool **(Mot. 1566)**.

III - FINAL OPERATION

❏ Refit:

- the injector rail protector,
- the bolts for the injector rail protector cover plate.

❏ Clip the injector rail protector cover into place.

❏ Clip on the wiring for the damper valve.

❏ Refit the clip for the intercooler air outlet pipe.

❏ Clip the intercooler air outlet pipe onto the damper valve.

❏ Clip the turbocharger pressure sensor cable onto the intercooler air outlet pipe.

❏ Connect the turbocharger pressure sensor connector.

❏ Refit:

- the retaining bracket for the intermediate air pipe between the turbocharger and the intercooler,
- the bolt for the retaining bracket of the intermediate air pipe between the turbocharger and the intercooler.

❏ Refit the clip for the turbocharger air outlet pipe.

❏ Clip the intermediate air pipe between the turbocharger and the intercooler onto the turbocharger air outlet pipe.

❏ Refit:

- the bolt for the intermediate air pipe between the turbocharger and the intercooler,
- the nut for the intermediate air pipe between the turbocharger and the intercooler,
- the engine cover.

❏ Connect the battery (see **Battery : Removal - Refitting**) (80A, Battery).

F9Q

Essential special tooling	
Mot. 1566	Spanner for removing high pressure pipes.

Tightening torques ▽	
nuts for the high pressure pipe(s) between the injector rail and the diesel injector on the injector side	**27 N.m**
nuts for the high pressure pipe(s) between the injector rail and the diesel injector on the injector rail side	**37 N.m**

IMPORTANT

To avoid all risk of damage to the systems, apply the safety and cleanliness instructions and operation recommendations before carrying out any repair (see **13B**, **Diesel injection**, **Diesel injection: Precautions for repair**, page **13B-1**) .

REMOVAL

I - REMOVAL PREPARATION OPERATION

❑ Disconnect the battery (see **Battery: Removal - Refitting**) (80A, Battery).

❑ Remove:

- the engine cover,
- the injector rail protector (see **13B**, **Diesel injection**, **Injector rail protector: Removal - Refitting**, page **13B-70**) .

II - OPERATION FOR REMOVAL OF PART CONCERNED

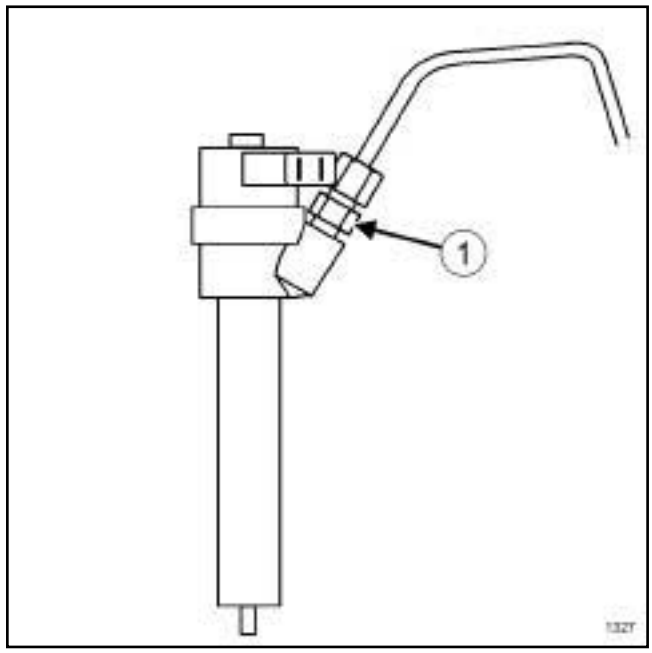

1327

❑

Note:

Do not damage the injector return nozzle.

❑ The injector intermediate union (**1**) must be held using a spanner while the high pressure pipes are loosened.

F9Q

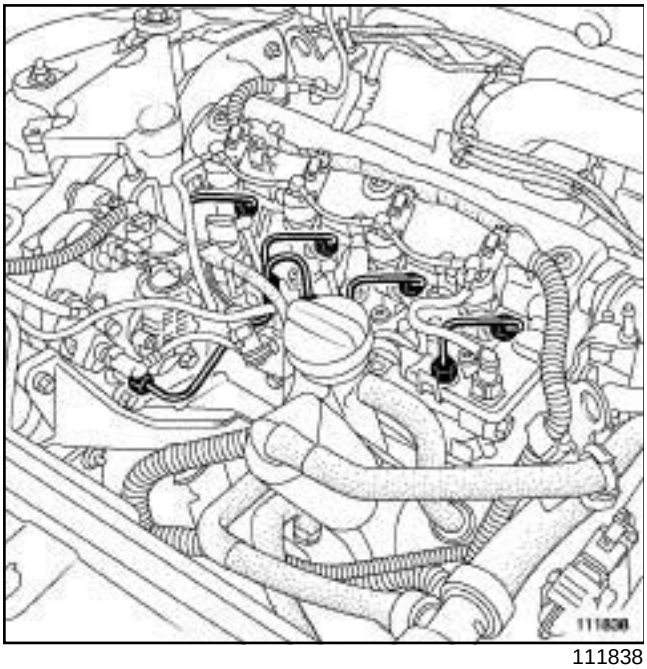

111838

❑ Clean the nuts of the high pressure pipe(s) between the injector rail and the diesel fuel injector (see **13B**, **Diesel injection**, **Diesel injection: Precautions for repair**, page **13B-1**) .

> **WARNING**
> Prepare for the flow of fluid, and protect the surrounding components.

❑ Remove:

- from the injector(s), the nut for the high pressure pipe(s) between the injector rail and the diesel fuel injector using the tool **(Mot. 1566)**,
- from the injector rail, the nut for the high pressure pipe(s) between the injector rail and the diesel fuel injector using the tool **(Mot. 1566)**,
- the high pressure pipe(s) between the injector rail and the diesel injector.

> **WARNING**
> To prevent impurities from entering the circuit, place protective plugs on all fuel circuit components exposed to the open air.

❑ Fit blanking plugs on:

- the opening(s) of the diesel fuel injector(s),
- the opening(s) on the injector rail.

REFITTING

I - REFITTING PREPARATION OPERATION

❑ **parts always to be replaced: High-pressure pipe between the rail and injector (11,05,03,01)**.

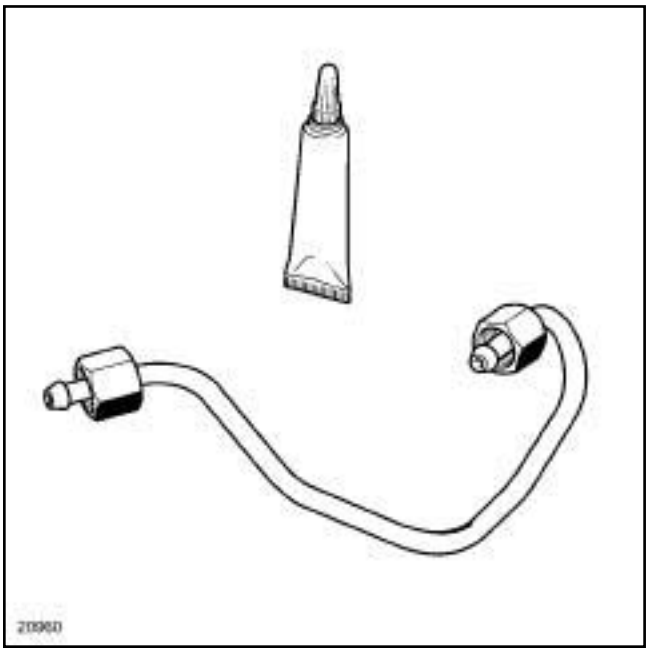

20960

❑

> **WARNING**
> Before fitting a new high pressure pipe, lightly lubricate the nut threads with the oil from the applicator provided in the new parts kit.
>
> Be careful not to allow oil into the high pressure pipe.
>
> Do not lubricate high pressure pipes supplied without an applicator, as these high pressure pipes are self-lubricating.

> **WARNING**
> Do not remove the blanking plugs from each component until the last moment.
>
> Also, do not remove the components from their packaging until they are to be fitted to the vehicle.

II - REFITTING OPERATION FOR PART CONCERNED

❑ Remove the blanking plugs on:

- the opening(s) of the diesel fuel injector(s),
- the opening(s) on the injector rail.

F9Q

- ❑ Refit one or more new high pressure pipes between the injector rail and the diesel fuel injector.
- ❑ Using the **(Mot. 1566)**, tighten to torque:
  - the **nuts for the high pressure pipe(s) between the injector rail and the diesel injector on the injector side (27 N.m)**,
  - the **nuts for the high pressure pipe(s) between the injector rail and the diesel injector on the injector rail side (37 N.m)**.

III - FINAL OPERATION

- ❑ Refit:
  - the injector rail protector (see **13B**, **Diesel injection**, **Injector rail protector: Removal - Refitting**, page **13B-70**) ,
  - the engine cover.
- ❑ Connect the battery (see **Battery : Removal - Refitting**) (80A, Battery).

K9K, and 832

Essential special tooling	
Mot. 1566	Spanner for removing high pressure pipes.
Mot. 1746	Offset spanner for tightening high pressure pump pipes.

Tightening torques ▽	
nuts for the high pressure pipe(s) between the injector rail and the diesel injector(s)	**28 N.m**
injector rail nuts	**28 N.m**
nuts for the high pressure pipes between the injector rail and the diesel injectors	**28 N.m**
clip for the intercooler air outlet pipe on the damper valve	**5.5 N.m**

IMPORTANT
To avoid all risk of damage to the systems, apply the safety and cleanliness instructions and operation recommendations before carrying out any repair (see **13B**, **Diesel injection**, **Diesel injection: Precautions for repair**, page **13B-1**) .

IMPORTANT
Wear leaktight gloves (Nitrile type) for this operation.

REMOVAL

I - REMOVAL PREPARATION OPERATION

❑ Disconnect the battery (see **Battery: Removal - Refitting**) (80A, Battery).

❑ Remove the front engine cover.

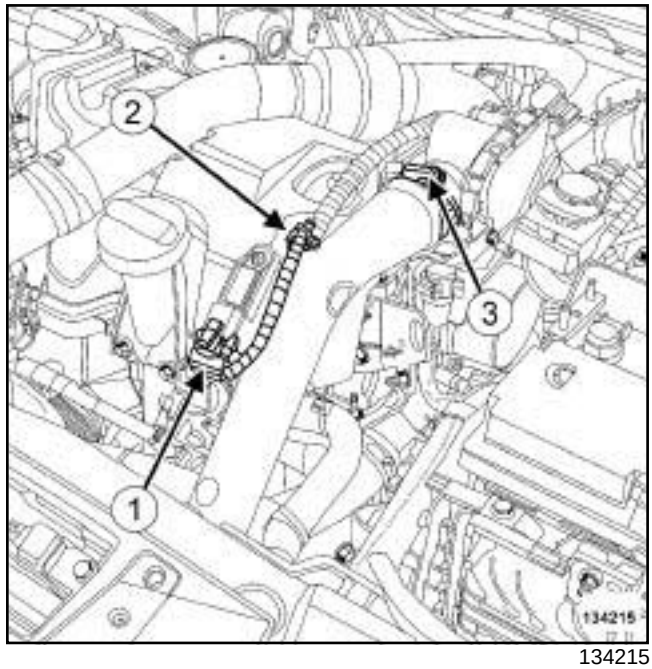

134215

❑ Disconnect the turbocharger pressure sensor connector (**1**) .

❑ Unclip the wiring for the turbocharging pressure sensor from the intercooler air outlet pipe at (**2**) .

❑ Undo the damper valve clip (**3**) from the intercooler air outlet pipe.

❑ Disconnect the intercooler air outlet pipe from the damper valve.

❑ Separate the intercooler air outlet pipe from the damper valve.

K9K, and 832

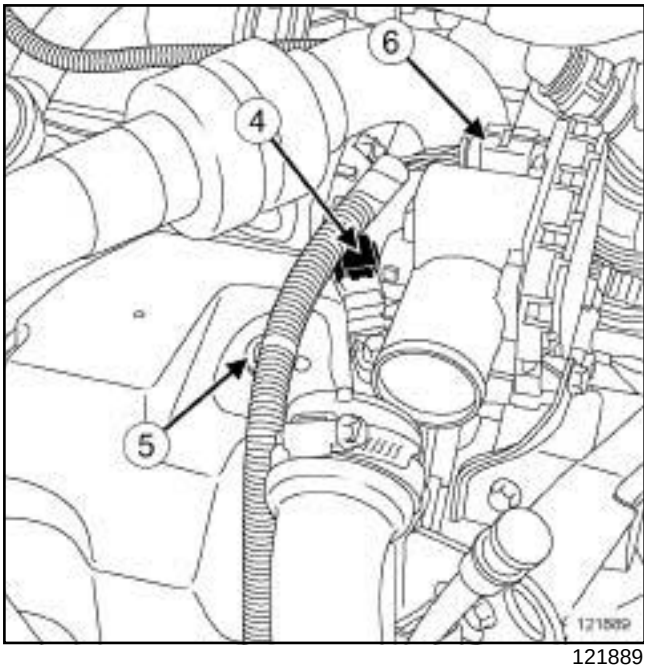

121889

❑ Disconnect:

- the damper valve connector (**4**) ,
- the connector (**5**) from the camshaft position sensor.

❑ Unclip the damper valve wiring from the injector rail protector cover plate at (**6**) .

❑ Remove the turbocharger outlet air pipe (see **12B**, **Turbocharging**, **Intercooler air inlet pipe: Removal - Refitting**, page **12B-41**) .

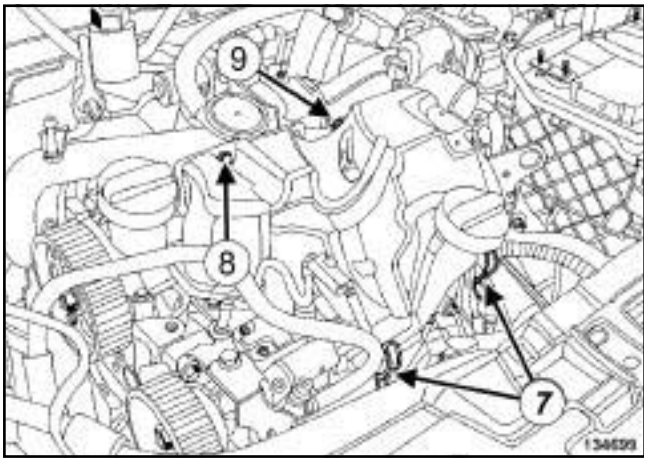

134699

❑ Unclip the injector rail protector cover at (**7**) .

❑ Remove:

- the injector rail protector cover bolt (**8**) ,
- the injector rail protector cover nut (**9**) ,
- the injector rail protector cover,
- the dipstick,
- the dipstick guide tube bolts.

❑ Move aside the dipstick guide.

❑ Clean the high pressure pipe unions between the rail and the injectors (see **13B**, **Diesel injection**, **Diesel injection: Precautions for repair**, page **13B-1**) .

II - OPERATION FOR REMOVAL OF PART CONCERNED

1 - Removing one, two or three high pressure pipes

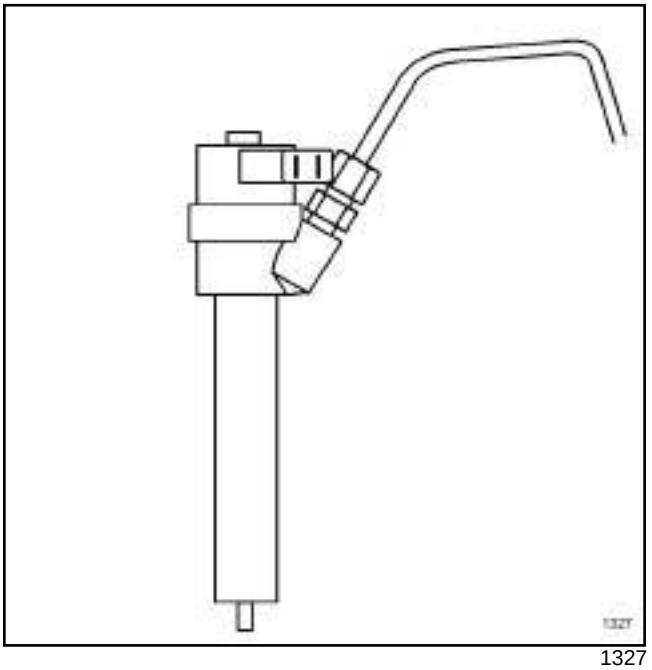

1327

❑

WARNING
Always hold the intermediate injector union in place with a wrench when loosening the high pressure pipes.

Do not damage the injector return nozzle.

WARNING
To avoid any corrosion or damage, protect the areas on which fuel is likely to run.

❑ Loosen the nuts for the high pressure pipe between the injector rail and the diesel fuel injector(s), using the tool **(Mot. 1566)**.

❑ Remove:

- the nut(s) for the high pressure pipe(s) between the injector rail and the diesel fuel injector(s) on the injector rail side,

K9K, and 832

- the nut(s) for the high pressure pipe(s) between the injector rail and the diesel fuel injector(s) on the injector side,
- the high pressure pipe(s) between the injector rail and the diesel fuel injector(s) concerned.

❏ Fit suitable blanking plugs on:

- the opening(s) on the injector rail,
- the opening of the diesel injector(s).

2 - Removing the four high pressure pipes

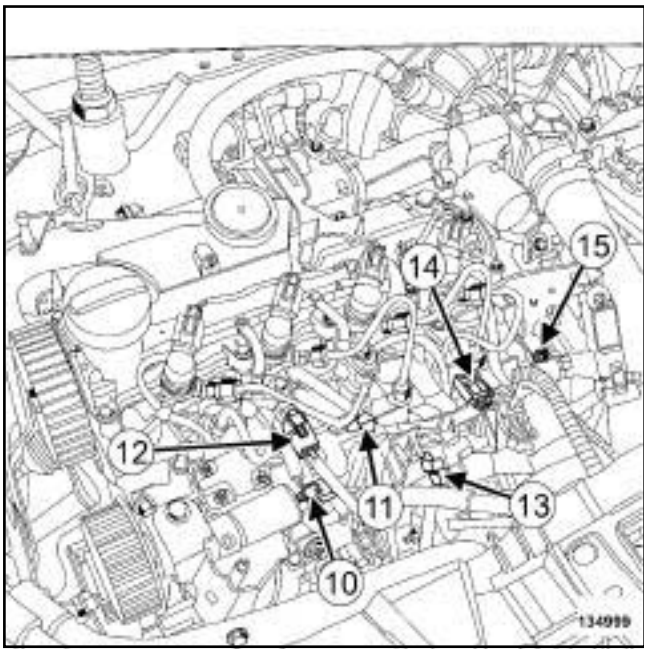

134999

❏ Unclip the diesel fuel injector wiring from the rocker cover.

❏ Disconnect:

- all heater plug connectors,
- the connector for each diesel injector,
- the connector (**10**) for the fuel pressure regulation solenoid valve,
- the connector (**11**) for the fuel flow regulation solenoid valve,
- the fuel temperature sensor connector (**12**) ,
- the connector (**13**) for the injector rail pressure sensor.

❏ Unclip the injection wiring clip (**14**) .

❏ Remove the nut (**15**) from the injection wiring bracket.

❏ Move aside the injection wiring.

❏ Unclip:

- the alternator wiring from the injector rail protector,
- the coolant hose from the injection pump protector

❏ Unclip the expansion bottle lower cooling hose from the injection pump protector.

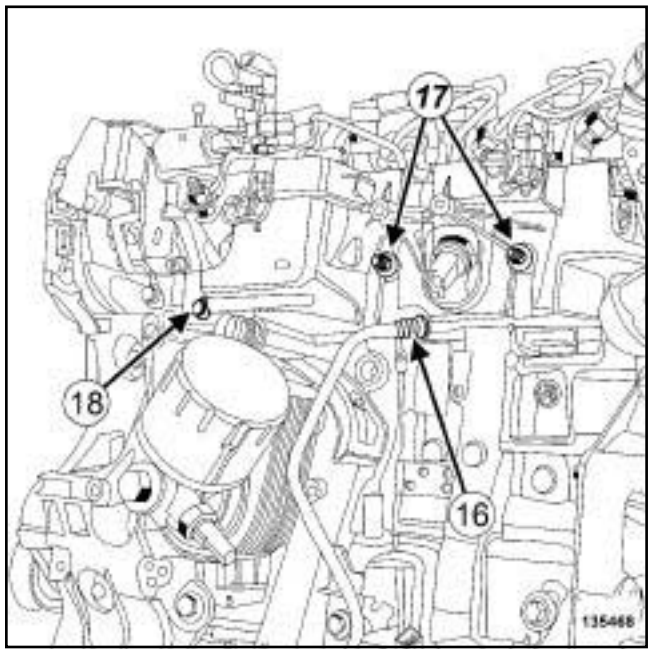

135468

❏ Disconnect the fuel drain pipe from the injector rail protector (**16**) .

❏ Move the fuel drain pipe aside.

❏ Remove:

- the nuts (**17**) from the injector rail protector,
- the injector rail protector bolt (**18**) ,
- the injector rail protector.

K9K, and 832

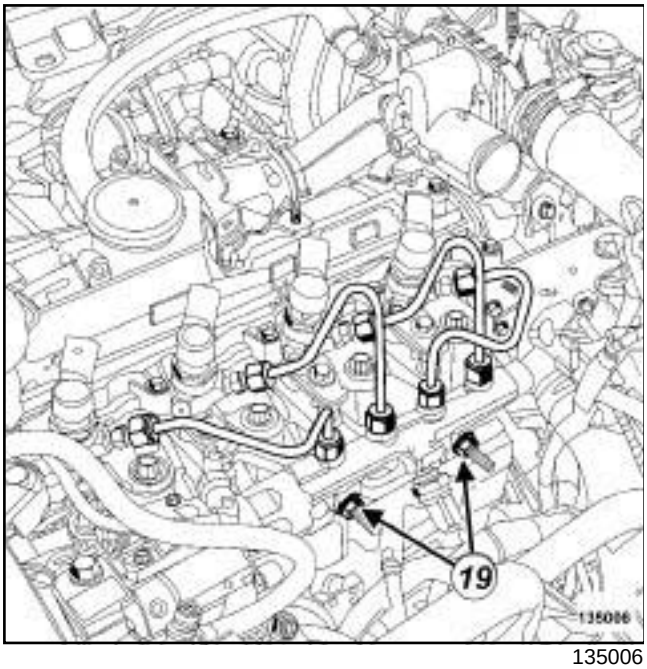

135006

❑ Loosen the injector rail nuts (**19**) .

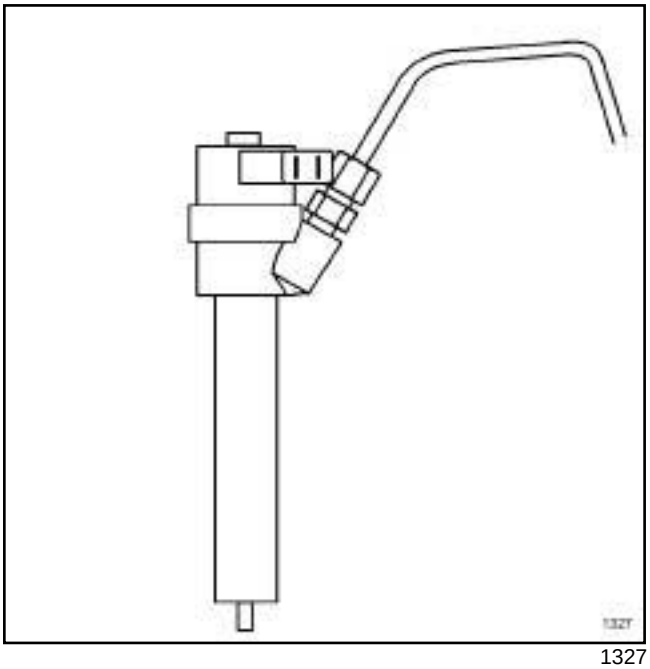

1327

❑

WARNING

Always hold the intermediate injector union in place with a wrench when loosening the high pressure pipes.

Do not damage the injector return nozzle.

WARNING

To avoid any corrosion or damage, protect the areas on which fuel is likely to run.

❑ Loosen the nuts for the high pressure pipe between the injector rail and the diesel fuel injectors, using the tool **(Mot. 1566)**.

❑ Remove:

- the nut for the high pressure pipe between the injector rail and the diesel fuel injectors on the injector rail side,
- the nut for the high pressure pipe between the injector rail and the diesel fuel injectors on the injector side,
- the high pressure pipe between the injector rail and the diesel fuel injectors.

❑ Fit suitable blanking plugs on:

- the injector rail openings,
- the opening of each diesel injector.

K9K, and 832

REFITTING

I - REFITTING PREPARATION OPERATION

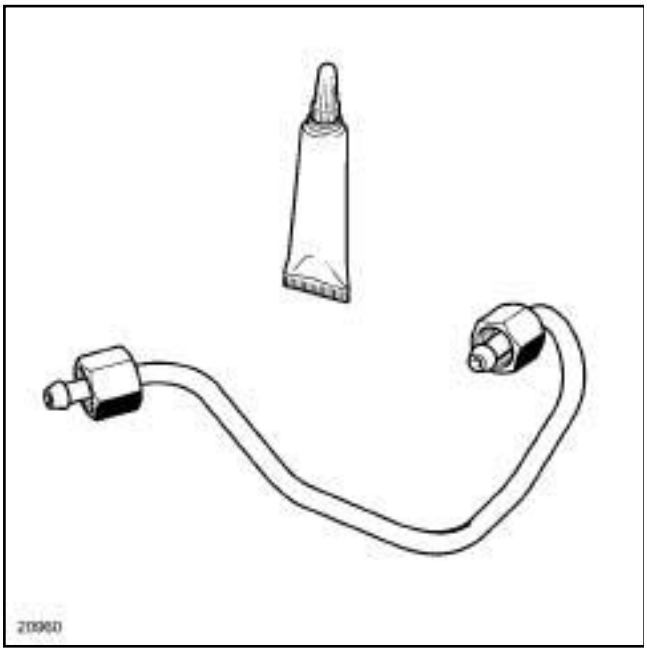

20960

❑

WARNING

Before fitting a new high pressure pipe, lightly lubricate the nut threads with the oil from the applicator provided in the new parts kit.

Be careful not to allow oil into the high pressure pipe.

Do not lubricate high pressure pipes supplied without an applicator, as these high pressure pipes are self-lubricating.

WARNING

Do not remove the blanking plugs from each component until the last moment.

Also, do not remove the components from their packaging until they are to be fitted to the vehicle.

❑ **parts always to be replaced: High-pressure pipe between the rail and injector (11,05,03,01)**.

II - REFITTING OPERATION FOR PART CONCERNED

1 - Refitting one, two or three high pressure pipes

❑ Remove the blanking plug

- the injector rail opening(s),
- the opening of the diesel injector(s).

❑ Screw on the nuts for the high pressure pipe(s) between the injector rail and the diesel injector(s) by hand without tightening, starting on the injector rail side.

❑ Using the tool **(Mot. 1566)** or the tool **(Mot. 1746)**, torque tighten the **nuts for the high pressure pipe(s) between the injector rail and the diesel injector(s) (28 N.m)**.

2 - Refitting the four high pressure pipes

❑ Remove the blanking plug

- the injector rail openings,
- the opening of each diesel injector.

❑ Screw on the nuts for the high pressure pipe(s) between the injector rail and the diesel injector(s) by hand without tightening, starting on the injector rail side.

❑ Tighten to torque:

- the **injector rail nuts (28 N.m)**,
- using the tool **(Mot. 1566)** or the tool **(Mot. 1746)** the **nuts for the high pressure pipes between the injector rail and the diesel injectors (28 N.m)**.

❑ Refit the injector rail protector.

❑ Clip:

- the expansion bottle lower cooling hose onto the injection pump protector,
- the alternator wiring onto the injector rail protector.

❑ Fit the fuel drain pipe.

❑ Connect the fuel drain pipe to the injector rail protector.

❑ Fit the injection wiring.

❑ Refit the injection wiring bracket nut.

❑ Clip on the injection wiring clip.

❑ Refit:

- injector rail pressure sensor connector,
- the fuel temperature sensor connector,

- the connector for the fuel flow regulation solenoid valve,
- the connector for the fuel pressure regulation solenoid valve,
- the connector for each diesel injector,
- all heater plug connectors.

❏ Clip the diesel injector wiring onto the rocker cover.

III - FINAL OPERATION

❏ Fit the dipstick guide tube.

❏ Refit:

- the dipstick guide bolts,
- the dipstick,
- the injection rail protector cover,

❏ Clip on the injector rail protector cover.

❏ Refit the turbocharger air outlet pipe (see **12B**, **Turbocharging**, **Intercooler air inlet pipe: Removal - Refitting**, page **12B-41**) .

❏ Fit the intercooler air outlet pipe.

❏ Connect the intercooler air outlet pipe on the damper valve.

❏ Torque tighten the **clip for the intercooler air outlet pipe on the damper valve (5.5 N.m)**.

❏ Clip the turbocharger pressure sensor wiring onto the intercooler air outlet pipe.

❏ Connect the turbocharger pressure sensor connector.

❏ Clip the wiring for the damper valve onto the injector rail protector cover plate.

❏ Connect:

- the camshaft position sensor connector,
- the connector to the damper flap.

❏ Refit the engine cover.

❏ Connect the battery (see **Battery : Removal - Refitting**) (80A, Battery).

❏ Check that there are no diesel leaks.

K9K, and 830

Essential special tooling	
Mot. 1566	Spanner for removing high pressure pipes.
Mot. 1746	Offset spanner for tightening high pressure pump pipes.

Tightening torques ▽	
nuts for the high pressure pipe(s) between the injector rail and the diesel injector(s)	**28 N.m**
injector rail nuts	**28 N.m**
nuts for the high pressure pipes between the injector rail and the diesel injectors	**28 N.m**

IMPORTANT
To avoid all risk of damage to the systems, apply the safety and cleanliness instructions and operation recommendations before carrying out any repair (see **13B**, **Diesel injection**, **Diesel injection: Precautions for repair**, page **13B-1**) .

IMPORTANT
Wear leaktight gloves (Nitrile type) for this operation.

REMOVAL

I - REMOVAL PREPARATION OPERATION

❑ Disconnect the battery (see **Battery: Removal - Refitting**) (80A, Battery).

❑ Remove:

- the engine cover,
- the turbocharger air outlet pipe (see **12B**, **Turbocharging**, **Intercooler air inlet pipe: Removal - Refitting**, page **12B-41**) .

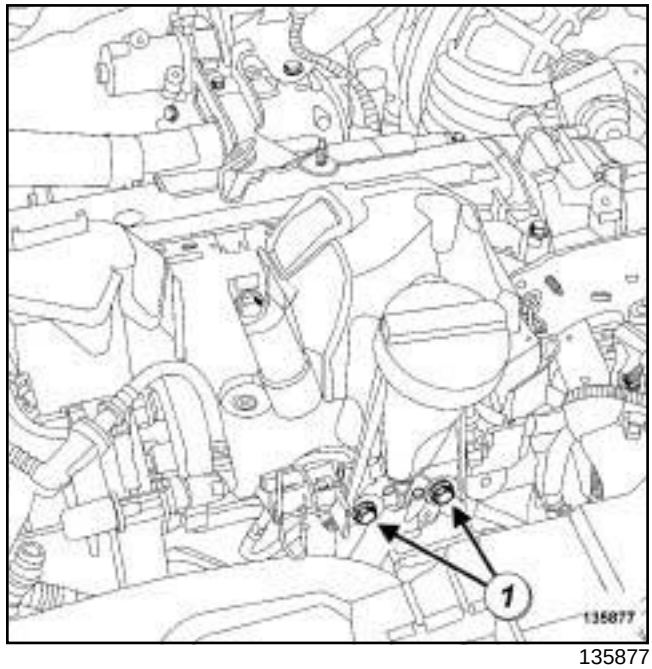

135877

❑ Remove:

- the dipstick,
- the dipstick guide bolts (**1**) .

❑ Move aside the dipstick guide.

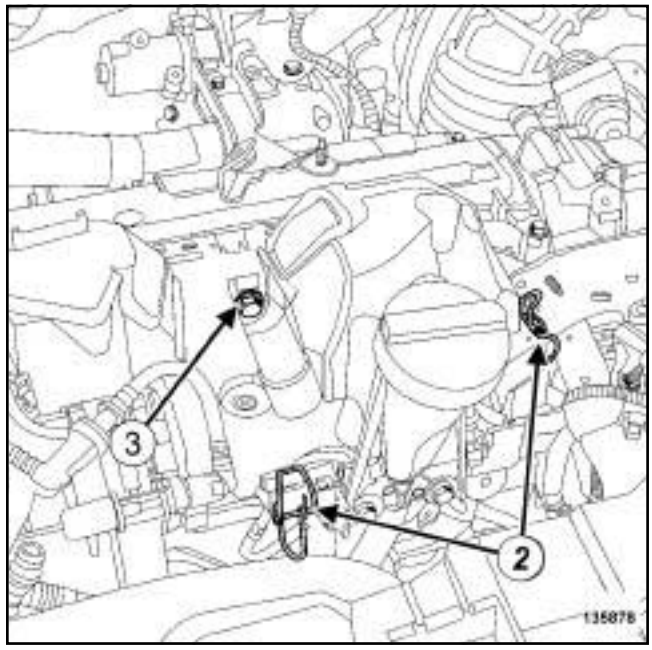

135878

❑ Unclip the injector rail protector cover at (**2**) .

❑ Remove:

- the injector rail protector cover bolt (**3**) ,
- the injection rail protector cover,

K9K, and 830

❑ Clean the high pressure pipe unions between the rail and the diesel fuel injectors (see **13B**, **Diesel injection**, **Diesel injection: Precautions for repair**, page **13B-1**) .

II - OPERATION FOR REMOVAL OF PART CONCERNED

1 - Removing one, two or three high pressure pipes

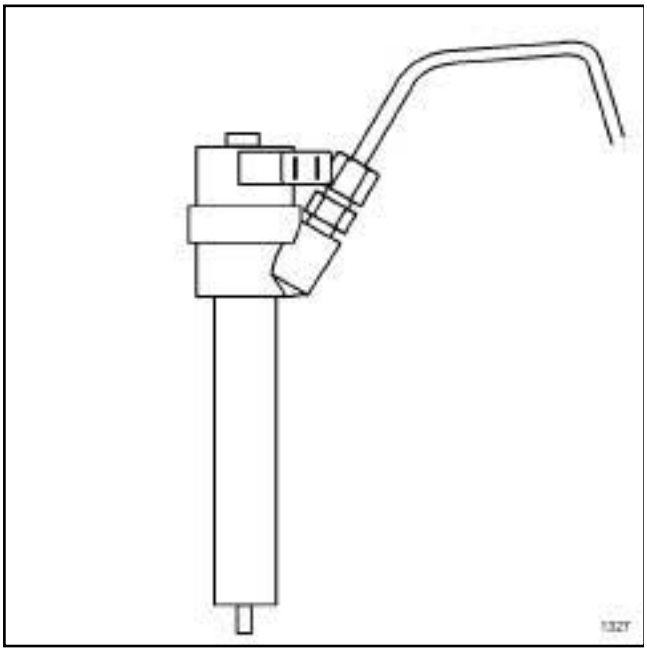

1327

❑

> **WARNING**
> Always hold the intermediate injector union in place with a wrench when loosening the high pressure pipes.
>
> Do not damage the injector return nozzle.

> **WARNING**
> To avoid any corrosion or damage, protect the areas on which fuel is likely to run.

❑ Loosen the nuts for the high pressure pipe(s) between the injector rail and the diesel fuel injector(s), using the tool **(Mot. 1566)**.

❑ Remove:

- the nuts for the high pressure pipe(s) between the injector rail and the diesel fuel injector(s) on the injector rail side,
- the nuts for the high pressure pipe(s) between the injector rail and the diesel fuel injector(s) on the injector side,
- the high pressure pipes between the injector rail and the diesel injectors concerned.

❑ Fit suitable blanking plugs on:

- the opening(s) on the injector rail,
- the opening of the diesel fuel injector(s).

2 - Removing the four high pressure pipes

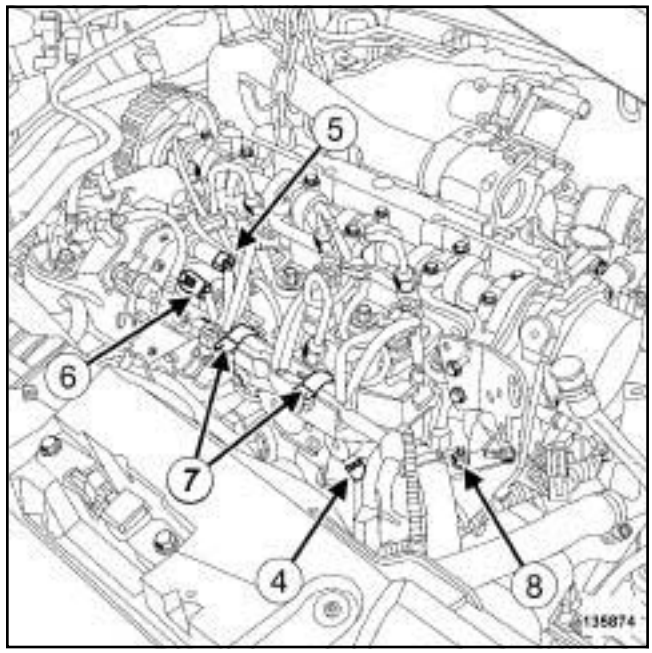

135874

❑ Disconnect:

- the connector (**4**) from the injector rail pressure sensor,
- the fuel temperature sensor connector (**5**) ,
- the connector (**6**) for the fuel flow regulation solenoid valve,
- all heater plug connectors,
- the connector for each diesel injector.

❑ Unclip the injection wiring clips (**7**) .

❑ Remove the nut (**8**) from the injection wiring bracket.

❑ Separate the injection wiring.

K9K, and 830

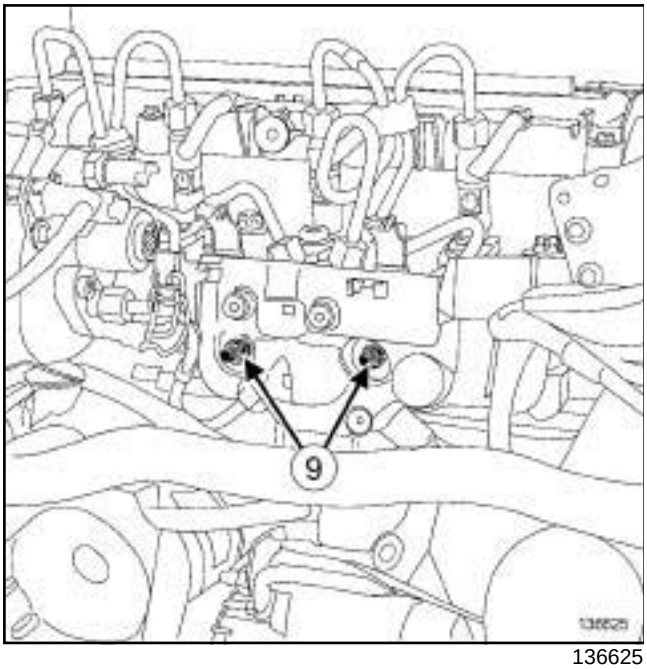

136625

❑ Remove:

- the nuts (**9**) from the injector rail protector,
- the injector rail protector.

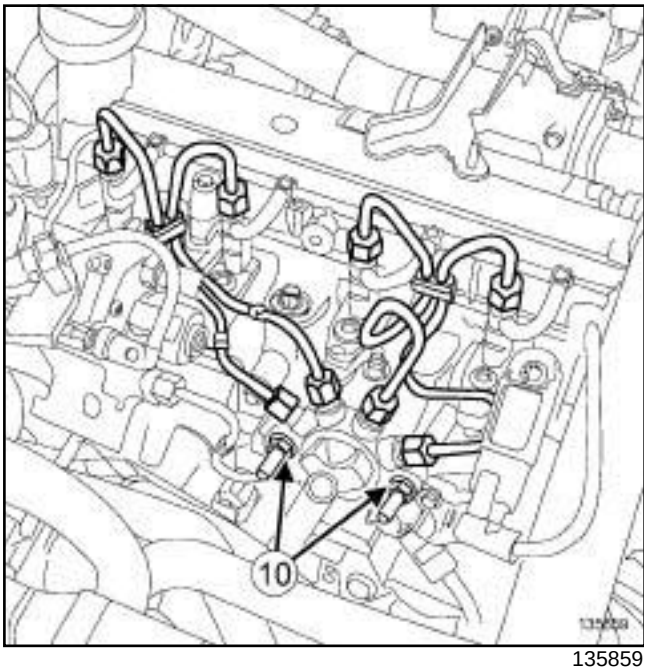

135859

❑ Undo the injector rail nuts (**10**) .

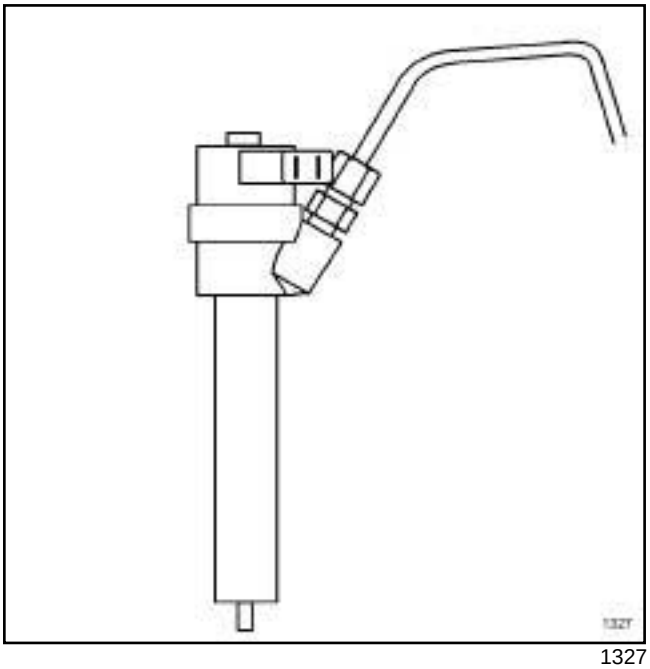

1327

❑

WARNING

Always hold the intermediate injector union in place with a wrench when loosening the high pressure pipes.

Do not damage the injector return nozzle.

WARNING

To avoid any corrosion or damage, protect the areas on which fuel is likely to run.

❑ Undo the high pressure pipe nuts between the rail and the injector using the **(Mot. 1566)**.

❑ Remove:

- the nut for the high pressure pipes between the injector rail and the diesel fuel injectors on the injector rail side,
- the nut for the high pressure pipes between the injector rail and the diesel fuel injectors on the injector side,
- the high pressure pipes between the injector rail and the diesel fuel injectors concerned.

❑ Fit suitable blanking plugs on:

- the injector rail openings,
- the opening of each diesel injector.

K9K, and 830

REFITTING

I - REFITTING PREPARATION OPERATION

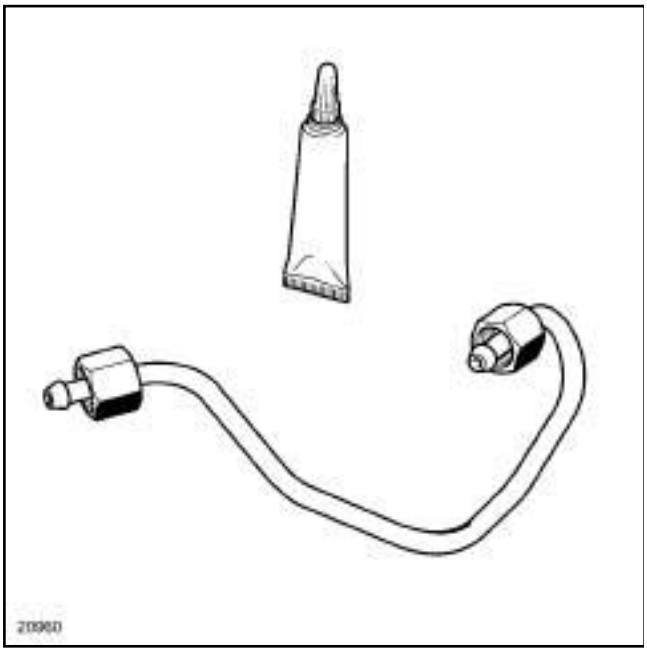

20960

❑

WARNING

Before fitting a new high pressure pipe, lightly lubricate the nut threads with the oil from the applicator provided in the new parts kit.

Be careful not to allow oil into the high pressure pipe.

Do not lubricate high pressure pipes supplied without an applicator, as these high pressure pipes are self-lubricating.

WARNING

Do not remove the blanking plugs from each component until the last moment.

Also, do not remove the components from their packaging until they are to be fitted to the vehicle.

❑ **parts always to be replaced: High-pressure pipe between the rail and injector (11,05,03,01)**.

II - REFITTING OPERATION FOR PART CONCERNED

1 - Refitting one, two or three high pressure pipes

❑ Remove the blanking plugs from:

- the injector rail opening(s),
- the opening of the diesel injector(s).

❑ Screw on the nuts for the high pressure pipe(s) between the injector rail and the diesel injector(s) by hand without tightening, starting on the injector rail side.

❑ Using the tool **(Mot. 1566)** or the tool **(Mot. 1746)**, torque tighten the **nuts for the high pressure pipe(s) between the injector rail and the diesel injector(s) (28 N.m)**.

2 - Refitting the four high pressure pipes

❑ Remove the blanking plugs from:

- the injector rail openings,
- the opening of each diesel injector.

❑ Screw on the nuts for the high pressure pipe(s) between the injector rail and the diesel injector(s) by hand without tightening, starting on the injector rail side.

❑ Torque tighten:

- the **injector rail nuts (28 N.m)**,
- using the tool **(Mot. 1566)** or the tool **(Mot. 1746)** **(Mot. 1566)** **(Mot. 1746)** the **nuts for the high pressure pipes between the injector rail and the diesel injectors (28 N.m)**.

❑ Refit the injector rail protector.

❑ Fit the injection wiring.

❑ Refit the injection wiring bracket nut.

❑ Clip on the injection wiring clip.

❑ Connect:

- the connector for each diesel injector,
- all heater plug connectors,
- the connector for the turbocharging fuel flow regulation solenoid valve,
- the fuel temperature sensor connector,
- the injector rail pressure sensor connector.

K9K, and 830

III - FINAL OPERATION

- ❏ Refit:
  - the injector rail protector cover,
  - the injection rail protector cover bolt.
- ❏ Clip on the injector rail protector cover plate.
- ❏ Fit the dipstick guide tube.
- ❏ Refit:
  - the dipstick guide bolts,
  - the dipstick.
- ❏ Refit the turbocharger air outlet pipe (see **12B**, **Turbocharging**, **Intercooler air inlet pipe: Removal - Refitting**, page **12B-41**) .
- ❏ Connect the battery (see **Battery : Removal - Refitting**) (80A, Battery).
- ❏ Refit the engine cover.
- ❏ Reprime the fuel circuit using the manual priming pump.
- ❏ Check that there are no diesel leaks (see **High pressure pipe: Checking**) .

K9K, and 834

Essential special tooling	
Mot. 1746	Offset spanner for tightening high pressure pump pipes.
Mot. 1566	Spanner for removing high pressure pipes.

Tightening torques ▽	
nuts on the high pressure pipes between the injector rail and the injectors at the injector rail end	**28 N.m**
nuts on the high pressure pipes between the injector rail and the diesel injectors at the diesel injector end	**28 N.m**
injector rail protector nuts	**21 N.m**
dipstick guide tube bolt	**8 N.m**
nuts for the high pressure pipe(s) between the injector rail and the diesel injector(s)	**28 N.m**

IMPORTANT
Wear leaktight gloves (Nitrile type) for this operation.

IMPORTANT
To avoid all risk of damage to the systems, apply the safety and cleanliness instructions and operation recommendations before carrying out any repair (see **13B**, **Diesel injection**, **Diesel injection: Precautions for repair**, page **13B-1**) .

WARNING
To avoid any corrosion or damage, protect the areas on which fuel is likely to run.

REMOVAL

I - REMOVAL PREPARATION OPERATION

❑ Disconnect the battery (see **Battery : Removal - Refitting**) (80A, Battery).

❑ Remove the front engine cover.

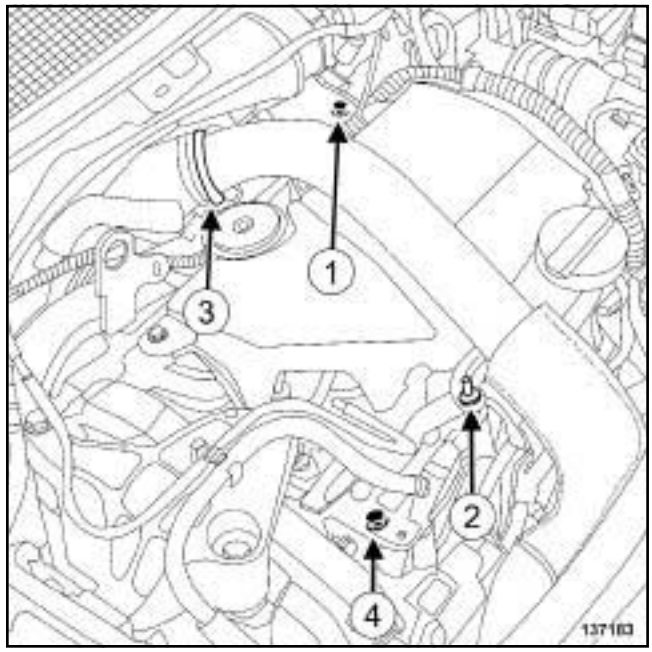

137183

❑ Remove:

- the bolt (**1**) for the intermediate air pipe between the turbocharger and the intercooler,
- the nut (**2**) for the intermediate air pipe between the turbocharger and the intercooler,
- the clip (**3**) for the turbocharger air outlet pipe.

❑ Remove the intermediate air pipe between the turbocharger and the intercooler.

❑ Remove:

- the bolt (**4**) from the retaining bracket of the intermediate air pipe between the turbocharger and the intercooler,
- the retaining bracket for the intermediate air pipe between the turbocharger and the intercooler,
- the seal from the turbocharger air outlet pipe.

K9K, and 834

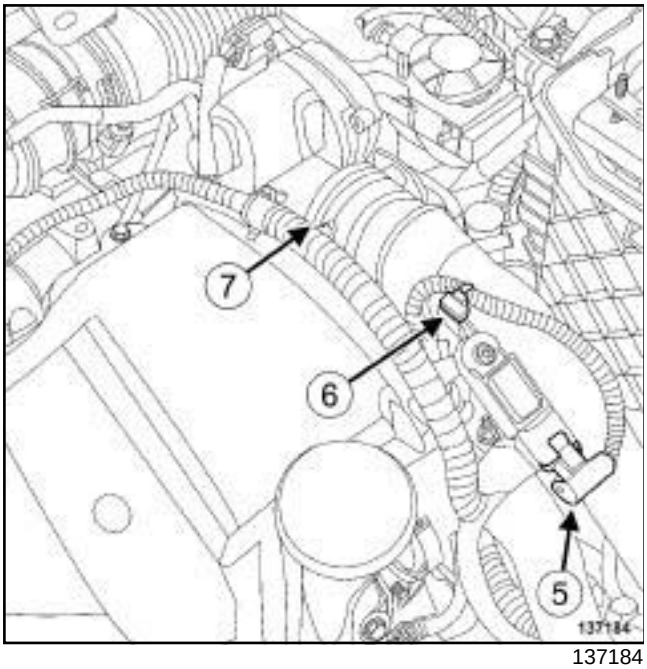

137184

- ❑ Disconnect the turbocharger pressure sensor connector (**5**) .
- ❑ Unclip the cable for the turbocharging pressure sensor from the intercooler air outlet pipe (**6**) .
- ❑ Pull the clip (**7**) from the intercooler air outlet pipe.
- ❑ Move the intercooler outlet air pipe to one side.
- ❑ Remove the seal from the intercooler air outlet pipe.

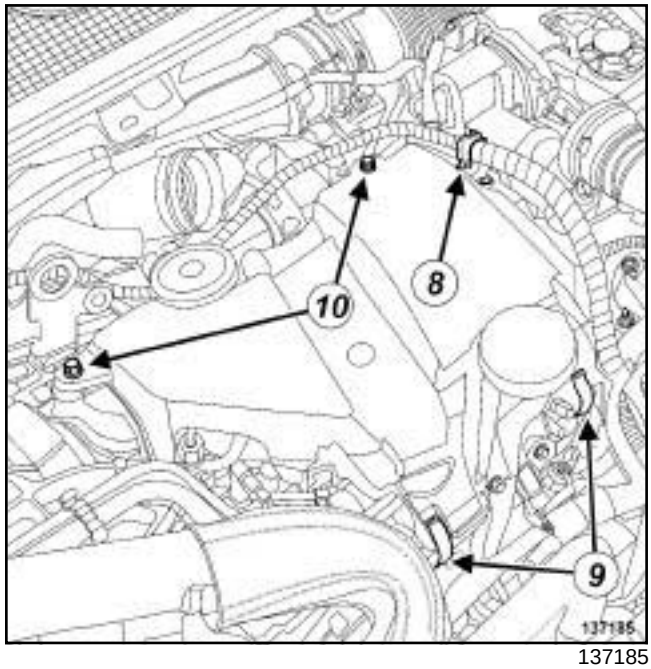

137185

- ❑ Unclip the wiring for the damper valve from the injector rail at (**8**) .
- ❑ Unclip the injector rail protector cover at (**9**) .
- ❑ Remove:
  - the bolts (**10**) from the injector rail protector cover plate,
  - the injector rail protector.

K9K, and 834

II - OPERATION FOR REMOVAL OF PART CONCERNED

1 - Removing one, two or three high pressure pipes between the injector rail and the diesel injector

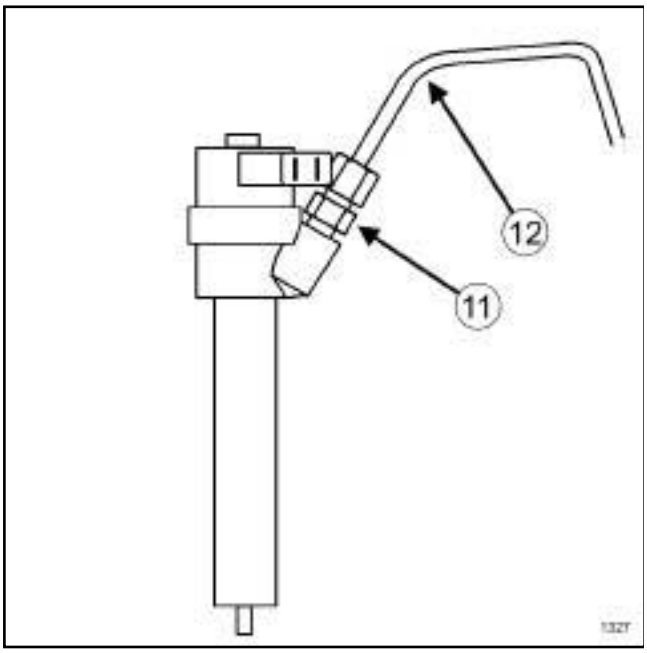

1327

❑

> **WARNING**
> The injector intermediate union (**11**) must be held using a spanner when loosening the high pressure pipes (**12**) .
>
> Do not damage the injector return nozzle.

> **WARNING**
> To avoid any corrosion or damage, protect the areas on which fuel is likely to run.

❑ Clean the nuts of the high pressure pipe(s) between the injector rail and the diesel fuel injector(s) (see **13B**, **Diesel injection**, **Diesel injection: Precautions for repair**, page **13B-1**) .

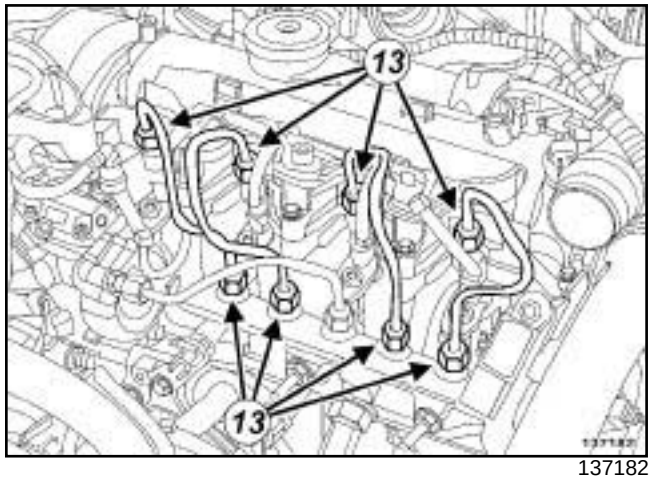

137182

❑ Clean the nuts (**13**) of the high pressure pipe(s) between the injector rail and the diesel fuel injector(s).

❑ Remove the high pressure pipe(s) between the injector rail and the diesel fuel injector(s).

❑ Fit suitable blanking plugs on:

- the opening(s) of the injector rail,

- the opening of the diesel fuel injector(s).

2 - Removing the four high pressure pipes between the injector rail and the diesel injector

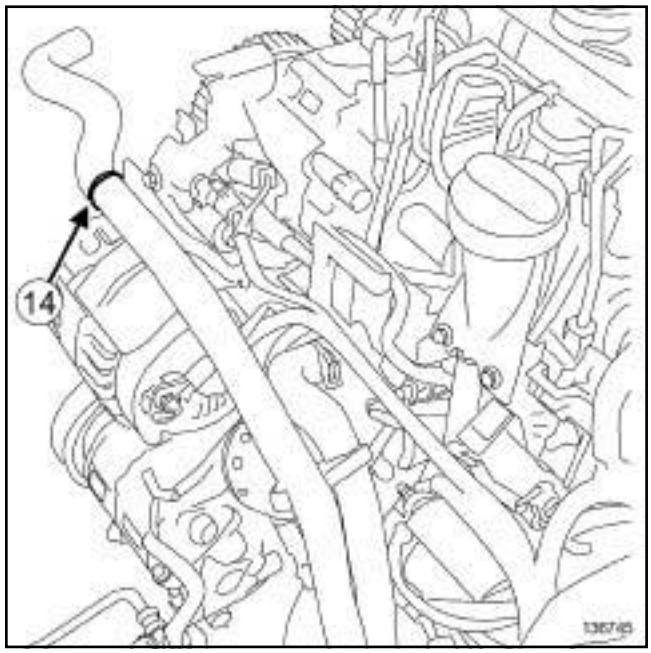

136745

❑ Unclip the expansion bottle lower cooling hose from the alternator protector at (**14**) .

K9K, and 834

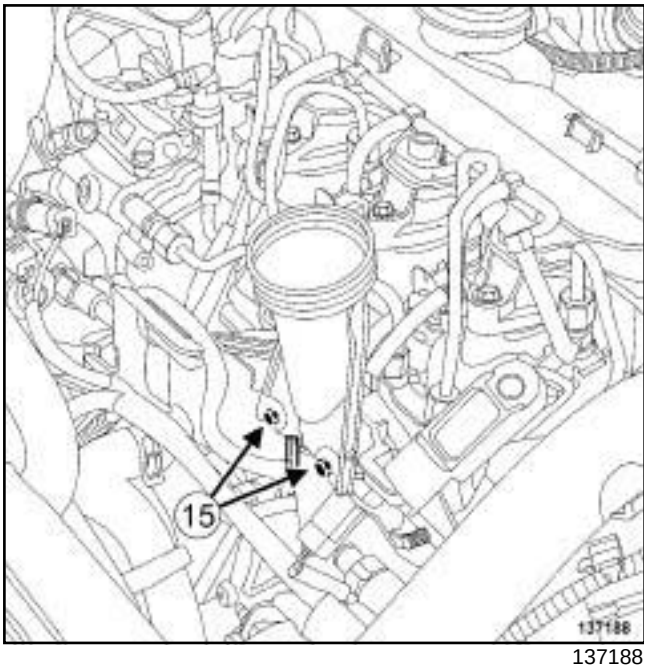

137188

❑ Remove:

- the dipstick,
- the dipstick guide bolts (**15**) .

❑ Move aside the dipstick guide.

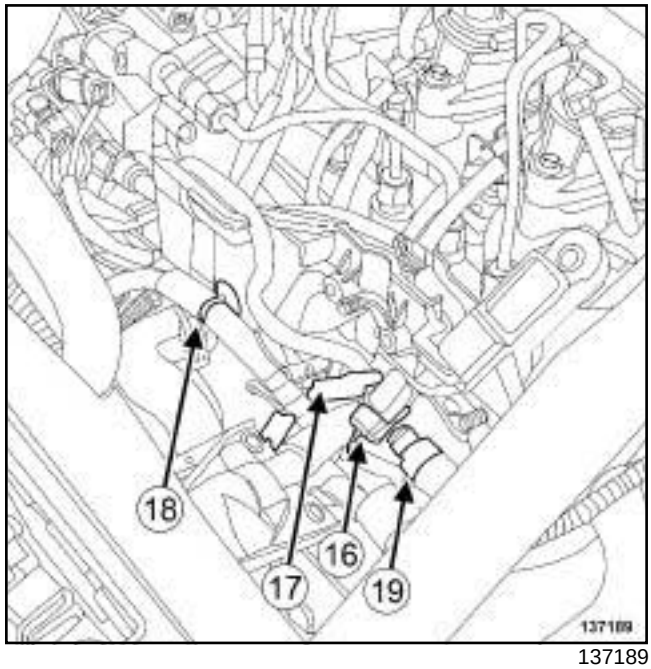

137189

❑ Disconnect the injector rail pressure sensor connector (**16**) .

❑ Unclip the diesel drain pipe from the injector rail protector (**17**) .

❑ Unclip the alternator wiring from the injector rail protector at (**18**) .

❑ Disconnect the exhaust fuel injector fuel supply pipe union (**19**) from the exhaust fuel injector fuel supply solenoid valve.

❑ Separate the fuel supply pipe from the exhaust fuel injector.

❑ Fit a suitable blanking plug to:

- the opening of the exhaust fuel injector fuel supply solenoid valve,
- the opening of the exhaust fuel injector fuel supply pipe union.

K9K, and 834

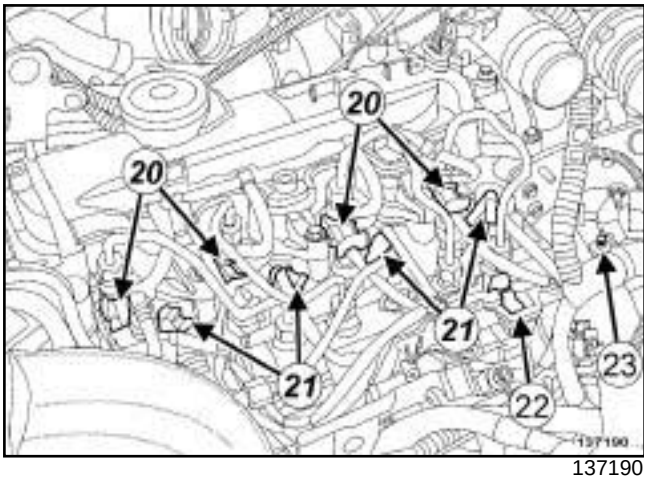

137190

❑ Disconnect:

- the connector (**20**) for each diesel injector,
- the connector (**21**) for each heater plug.

❑ Unclip the diesel injection wiring from the injector rail protector at (**22**) .

❑ Remove the nut (**23**) for the diesel injection wiring from the lifting eye on the gearbox side.

❑ Move the diesel injection wiring aside.

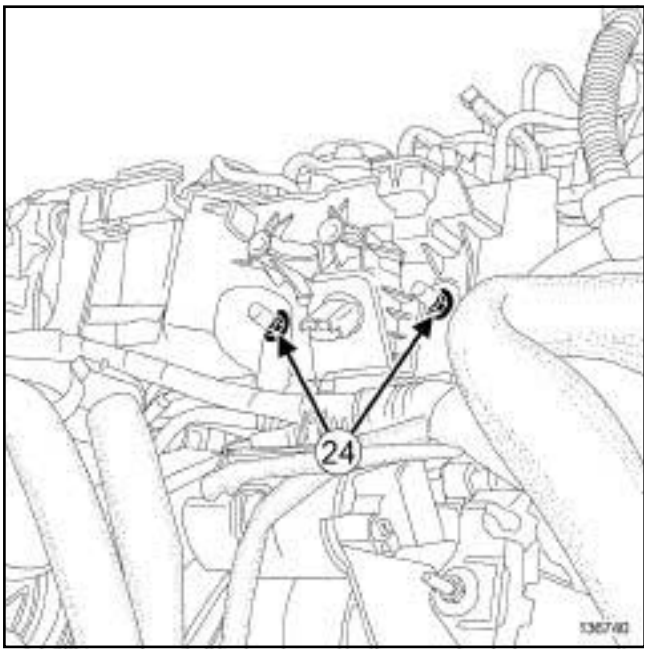

136740

❑ Remove:

- the nuts (**24**) from the injector rail protector,
- the injector rail protector.

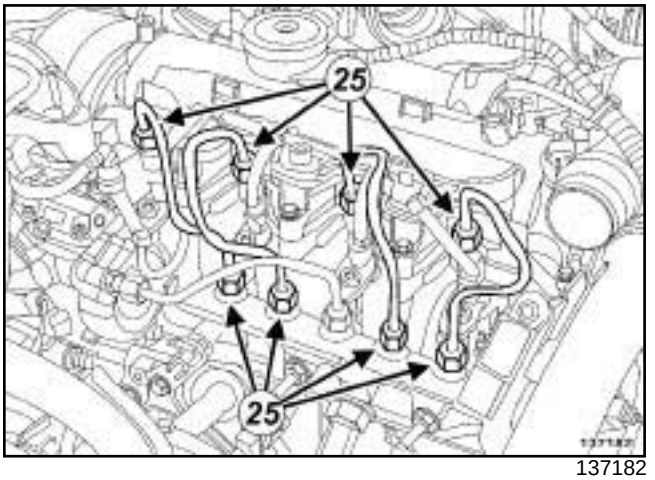

137182

❑ Undo the nuts (**25**) for the high pressure pipes between the injector rail and the diesel fuel injectors.

❑ Remove the high pressure pipes between the injector rail and the diesel fuel injectors.

❑ Fit suitable blanking plugs on:

- the injector rail openings,
- the opening of the diesel fuel injectors.

K9K, and 834

REFITTING

I - REFITTING PREPARATION OPERATION

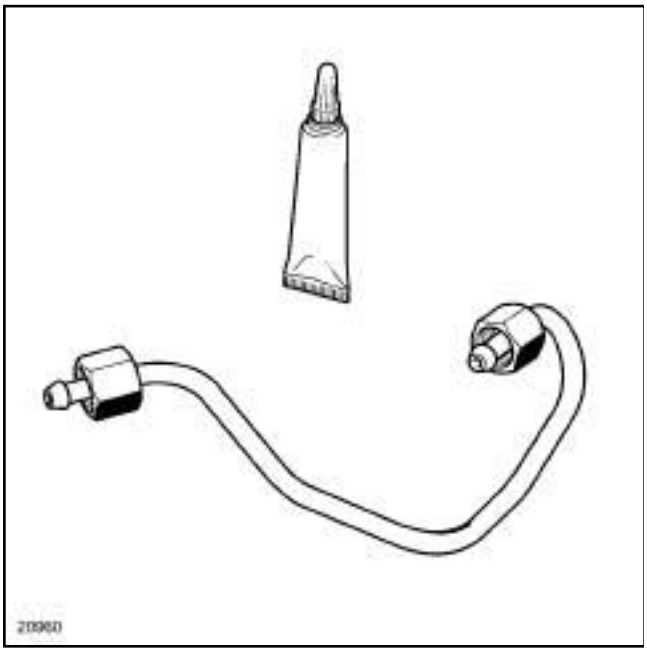

20960

❑

> **WARNING**
>
> Before fitting a new high pressure pipe, lightly lubricate the nut threads with the oil from the applicator provided in the new parts kit.
>
> Be careful not to allow oil into the high pressure pipe.
>
> Do not lubricate high pressure pipes supplied without an applicator, as these high pressure pipes are self-lubricating.

❑ **parts always to be replaced: High-pressure pipe between the rail and injector (11,05,03,01)**.

❑ **parts always to be replaced: turbocharger air cooler air outlet pipe seal (10,09,04,05)**.

❑ Always replace the seal for the turbocharger air outlet pipe.

❑ Refit:

- a seal to the air outlet pipe of the new intercooler inside the intercooler air outlet pipe,
- a seal to the air outlet pipe of the new turbocharger inside the turbocharger air outlet pipe.

II - REFITTING OPERATION FOR PART CONCERNED

1 - Refitting the four high pressure pipes between the injector rail and the diesel fuel injector

❑ Refit the high pressure pipes between the injector rail and the new diesel fuel injectors.

❑ Screw on the nuts for the high pressure pipes between the injector rail and the diesel injectors by hand, without tightening.

❑ Tighten to torque:

- the **nuts on the high pressure pipes between the injector rail and the injectors at the injector rail end (28 N.m)** using the tool **(Mot. 1746)**,
- the **nuts on the high pressure pipes between the injector rail and the diesel injectors at the diesel injector end (28 N.m)** using the tool **(Mot. 1566)**.

❑ Refit the injector rail protector.

❑ Torque tighten the **injector rail protector nuts (21 N.m)**.

❑ Fit the diesel injection wiring.

❑ Refit the nut for the diesel injection wiring onto the lifting eye on the gearbox side.

❑ Clip the diesel injection wiring onto the injector rail protector.

❑ Connect:

- all heater plug connectors,
- the connector for each diesel injector.

❑ Remove the blanking plugs from:

- the opening of the exhaust fuel injector fuel supply solenoid valve,
- the opening of the exhaust fuel injector fuel supply pipe union.

❑ Fit the exhaust fuel injector fuel supply pipe.

❑ Connect the exhaust fuel injector fuel supply pipe union to the exhaust fuel injector fuel supply solenoid valve.

❑ Clip the alternator wiring onto the injector rail protector.

❑ Clip the diesel drain pipe onto the injector rail protector.

❑ Connect the injector rail pressure sensor connector.

❑ Fit the dipstick guide tube.

❑ Torque tighten the **dipstick guide tube bolt (8 N.m)**.

K9K, and 834

❏ Refit the dipstick.

❏ Clip the expansion bottle lower cooling hose onto the alternator protector.

2 - Refitting one, two or three high pressure pipes between the injector rail and the diesel injector

❏ Remove the blanking plugs from:

- the opening(s) of the injector rail,
- the opening of the diesel fuel injector(s).

❏ Refit the high pressure pipe(s) between the injector rail and the new diesel fuel injector(s).

❏ Screw on the nuts for the high pressure pipe(s) between the injector rail and the diesel injector(s) by hand without tightening, starting on the injector rail side.

❏ Using the tool **(Mot. 1566)**, torque tighten the **nuts for the high pressure pipe(s) between the injector rail and the diesel injector(s) (28 N.m)**.

III - FINAL OPERATION

❏ Refit:

- the injector rail protector,
- the bolts for the injector rail protector cover plate.

❏ Clip the injector rail protector cover into place.

❏ Clip on the wiring for the damper valve.

❏ Refit the clip for the intercooler air outlet pipe.

❏ Clip on the intercooler air outlet pipe.

❏ Clip the turbocharger pressure sensor cable onto the intercooler air outlet pipe.

❏ Connect the turbocharger pressure sensor connector.

❏ Refit:

- the retaining bracket for the intermediate air pipe between the turbocharger and the intercooler,
- the bolt for the retaining bracket of the intermediate air pipe between the turbocharger and the intercooler.

❏ Refit the clip for the turbocharger air outlet pipe.

❏ Clip the intermediate air pipe between the turbocharger and the intercooler onto the turbocharger air outlet pipe.

❏ Refit:

- the bolt for the intermediate air pipe between the turbocharger and the intercooler,
- the nut for the intermediate air pipe between the turbocharger and the intercooler,
- the engine cover.

❏ Connect the battery (see **Battery : Removal - Refitting**) (80A, Battery).

F9Q

Essential special tooling	
Mot. 1566	Spanner for removing high pressure pipes.

Tightening torques ▽	
injector rail bolts	**30 Nm**
nuts on the high pressure pipes between the rail and the injector at the injector end	**27 N.m**
nut on the high pressure pipe between the pump and the rail at the high pressure pump end	**27 N.m**
nut on the high pressure pipe between the pump and the rail at the injector rail end	**37 N.m**
nuts on the high pressure pipes between the rail and the injector at the injector rail end	**37 N.m**

IMPORTANT
To avoid all risk of damage to the systems, apply the safety and cleanliness instructions and operation recommendations before carrying out any repair (see **13B**, **Diesel injection**, **Diesel injection: Precautions for repair**, page **13B-1**) .

REMOVAL

I - REMOVAL PREPARATION OPERATION

❑ Position the vehicle on a two-post lift (see **Vehicle: Towing and lifting**) (02A, Lifting equipment).

❑ Disconnect the battery (see **Battery: Removal - Refitting**) (80A, Battery).

❑ Remove:

- the engine cover,
- the injector rail protector (see **13B**, **Diesel injection**, **Injector rail protector: Removal - Refitting**, page **13B-70**) ,
- the high pressure pipes between the rail and the injector (see **13B**, **Diesel injection**, **High-pressure pipe between the rail and injector: Removal - Refitting**, page **13B-87**) ,
- the high pressure pipe between the pump and the rail (see **13B**, **Diesel injection**, **High-pressure pipe between the pump and rail: Removal - Refitting**, page **13B-71**) ,
- the engine undertray bolts,
- the engine undertray,
- the oil separator (see **11A**, **Top and front of engine**, **Oil decanter: Removal - Refitting**, page **11A-205**) .

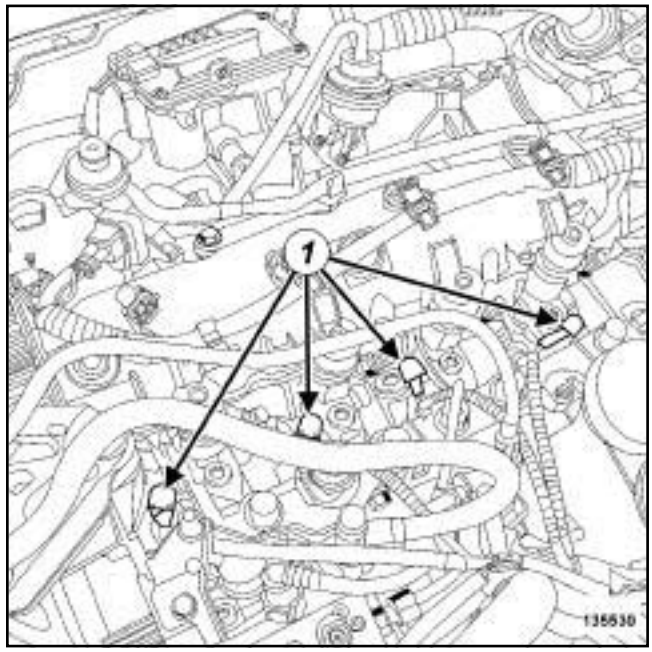

135530

❑ Disconnect the heater plug connectors (**1**) .

❑ Unclip the heater plug wiring from the lower protector of the injector rail.

F9Q

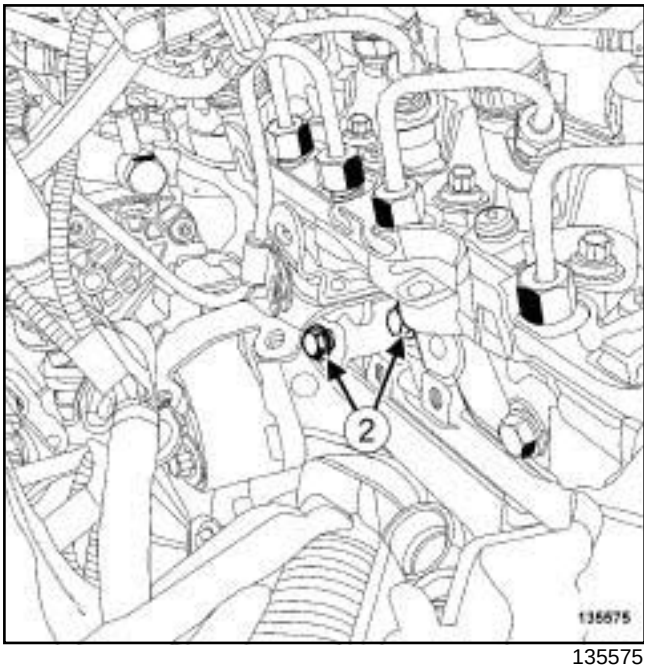

135575

❑ Remove the bolts (**2**) from the diesel fuel temperature sensor support.

II - OPERATION FOR REMOVAL OF PART CONCERNED

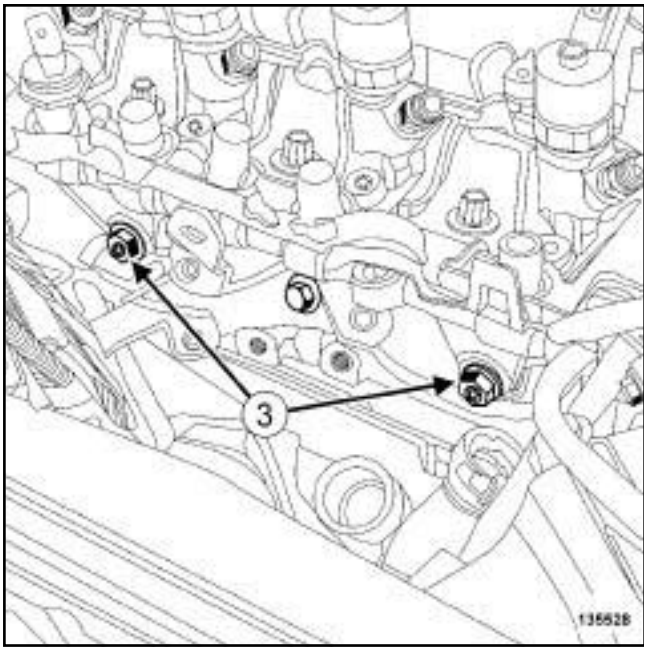

135528

❑ Remove:

- the injector rail bolts (**3**) ,
- the injector rail,
- the injector rail lower protector,
- the injector rail seal.

REFITTING

I - REFITTING PREPARATION OPERATION

❑ **parts always to be replaced: High-pressure pipe between the pump and rail (11,05,03,02)**.

parts always to be replaced: High-pressure pipe between the rail and injector (11,05,03,01).

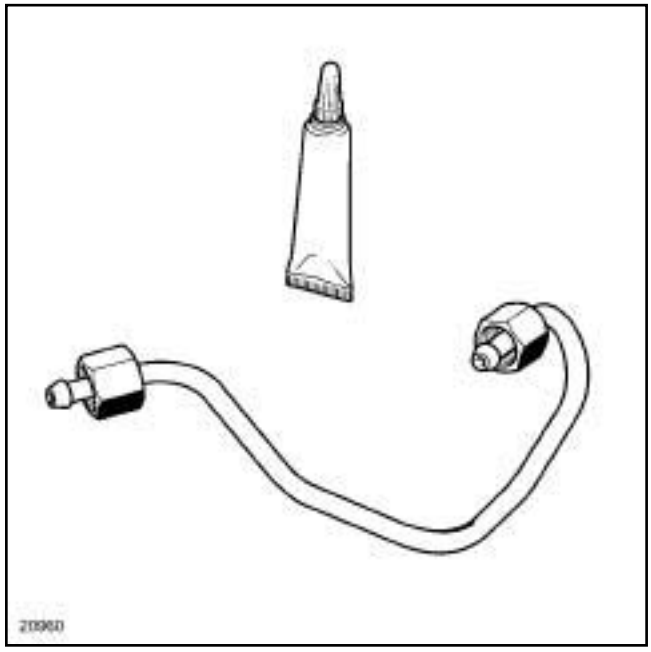

20960

❑

WARNING

Before fitting a new high pressure pipe, lightly lubricate the nut threads with the oil from the applicator provided in the new parts kit.

Be careful not to allow oil into the high pressure pipe.

Do not lubricate high pressure pipes supplied without an applicator, as these high pressure pipes are self-lubricating.

WARNING

Do not remove the blanking plugs from each component until the last moment.

Also, do not remove the components from their packaging until they are to be fitted to the vehicle.

F9Q

II - REFITTING OPERATION FOR PART CONCERNED

❏ Refit:

- a new injector rail seal,
- the injector rail lower protector,
- the injector rail.

❏ Fit without tightening the injector rail bolts.

❏ Refit a high pressure pipe between the pump and the new injector rail.

❏ Without tightening it, screw in the high pressure pipe between the pump and the rail.

❏ Refit the high pressure pipes between the new injector rail and the injector.

❏ Fit the high pressure pipes between the rail and the injector, without tightening.

❏ Tighten to torque:

- the **injector rail bolts (30 Nm)**,
- the **nuts on the high pressure pipes between the rail and the injector at the injector end (27 N.m)**,
- the **nut on the high pressure pipe between the pump and the rail at the high pressure pump end (27 N.m)** using the tool **(Mot. 1566)**,
- the **nut on the high pressure pipe between the pump and the rail at the injector rail end (37 N.m)** using the tool **(Mot. 1566)**,
- the **nuts on the high pressure pipes between the rail and the injector at the injector rail end (37 N.m)**.

III - FINAL OPERATION

❏ Refit the bolts for the diesel fuel temperature sensor support.

❏ Clip the heater plug wiring onto the lower protector of the injector rail.

❏ Connect the heater plug connectors.

❏ Refit:

- the oil separator (see **11A**, **Top and front of engine**, **Oil decanter: Removal - Refitting**, page **11A-205**) ,
- the engine undertray,
- the injector rail protector (see **13B**, **Diesel injection**, **Injector rail protector: Removal - Refitting**, page **13B-70**) ,
- the engine cover.

❏ Connect the battery (see **Battery : Removal - Refitting**) (80A, Battery).

Injector rail: Removal - Refitting

K9K, and 832

Essential equipment
diagnostic tool

IMPORTANT

To avoid all risk of damage to the systems, apply the safety and cleanliness instructions and operation recommendations before carrying out any repair (see **13B**, **Diesel injection**, **Diesel injection: Precautions for repair**, page **13B-1**) .

IMPORTANT

Wear leaktight gloves (Nitrile type) for this operation.

REMOVAL

I - REMOVAL PREPARATION OPERATION

❑ Disconnect the battery (see **Battery: Removal - Refitting**) (80A, Battery).

❑ Remove:

- the engine cover,
- the turbocharger air outlet pipe (see **12B**, **Turbocharging**, **Intercooler air inlet pipe: Removal - Refitting**, page **12B-41**) ,
- the high pressure pipe between the high pressure pump and the injector rail (see **13B**, **Diesel injection**, **High-pressure pipe between the pump and rail: Removal - Refitting**, page **13B-71**) ,
- the high pressure pipe between the injector rail and the diesel injectors (see **13B**, **Diesel injection**, **High-pressure pipe between the rail and injector: Removal - Refitting**, page **13B-87**) .

II - OPERATION FOR REMOVAL OF PART CONCERNED

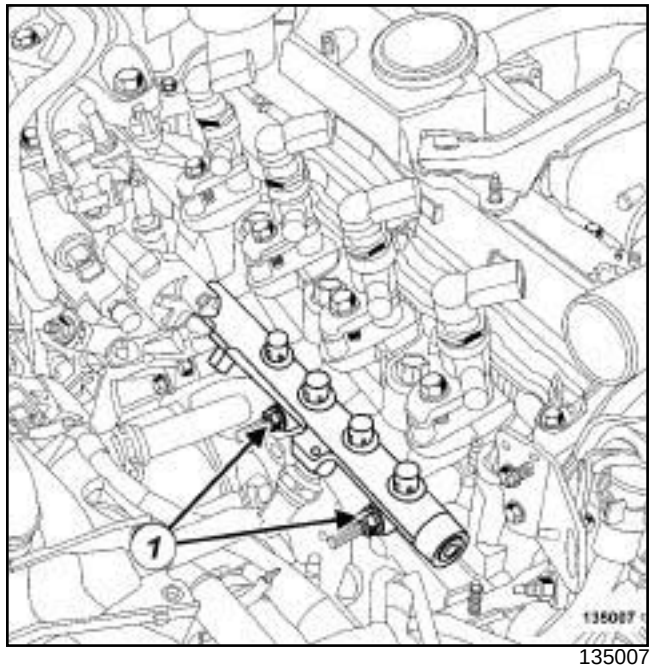

135007

❑ Remove:

- the nuts (**1**) from the injector rail,
- the injector rail.

REFITTING

I - REFITTING PREPARATION OPERATION

❑

WARNING

Do not remove the blanking plugs from each component until the last moment.

Also, do not remove the components from their packaging until they are to be fitted to the vehicle.

II - REFITTING OPERATION FOR PART CONCERNED

❑ Refit the injector rail.

❑ Without tightening, fit the injector rail nuts.

III - FINAL OPERATION

❑ Refit:

- the high pressure pipe between the injector rail and the diesel injectors (see **13B**, **Diesel injection**, **High-pressure pipe between the rail and injector: Removal - Refitting**, page **13B-87**) ,

- the high pressure pipe between the high pressure pump and the injector rail (see **13B**, **Diesel injection**, **High-pressure pipe between the pump and rail: Removal - Refitting**, page **13B-71**) ,
- the turbocharger air outlet pipe (see **12B**, **Turbocharging**, **Intercooler air inlet pipe: Removal - Refitting**, page **12B-41**) ,
- the engine cover.

❏ Connect the battery (see **Battery : Removal - Refitting**) (80A, Battery).

❏ Check that there are no diesel leaks.

❏ Apply the after repair procedure using the **diagnostic tool** :

- connect the **diagnostic tool**,
- select "Injection computer",
- go to repair mode,
- display the "After repair procedure" for the selected computer,
- select "Injector rail pressure sensor" in the section "List of components connected to this computer",
- carry out the operations described in the "After repair procedure" section.

Injector rail: Removal - Refitting

K9K, and 830

Essential equipment
diagnostic tool

IMPORTANT

To avoid all risk of damage to the systems, apply the safety and cleanliness instructions and operation recommendations before carrying out any repair (see **13B**, **Diesel injection**, **Diesel injection: Precautions for repair**, page **13B-1**) .

IMPORTANT

Wear leaktight gloves (Nitrile type) for this operation.

REMOVAL

I - REMOVAL PREPARATION OPERATION

❑ Disconnect the battery (see **Battery: Removal - Refitting**) (80A, Battery).

❑ Remove:

- the engine cover,
- the turbocharger air outlet pipe (see **12B**, **Turbocharging**, **Intercooler air inlet pipe: Removal - Refitting**, page **12B-41**) ,
- the high pressure pipe between the high pressure pump and the injector rail (see **13B**, **Diesel injection**, **High-pressure pipe between the pump and rail: Removal - Refitting**, page **13B-71**) ,
- the high pressure pipe between the injector rail and the diesel injectors (see **13B**, **Diesel injection**, **High-pressure pipe between the rail and injector: Removal - Refitting**, page **13B-87**) .

II - OPERATION FOR REMOVAL OF PART CONCERNED

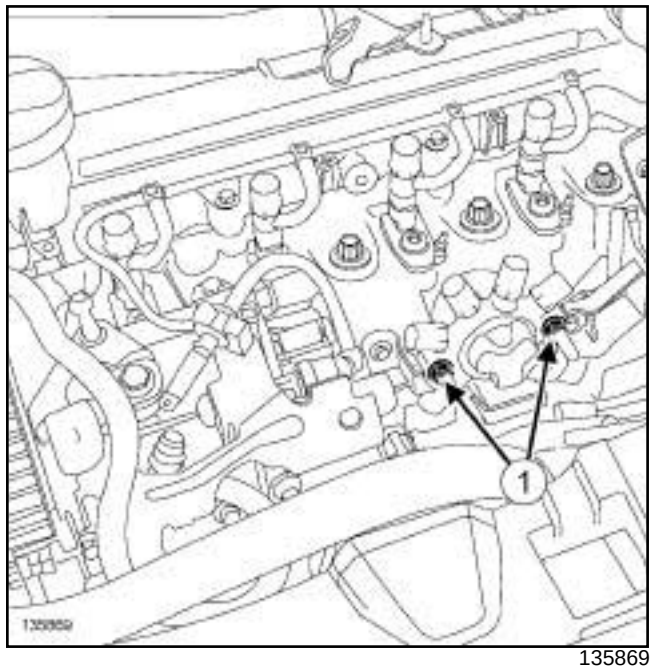

135869

❑ Remove:

- the nuts (**1**) from the injector rail,
- the injector rail.

REFITTING

I - REFITTING PREPARATION OPERATION

❑

WARNING

Do not remove the blanking plugs from each component until the last moment.

Also, do not remove the components from their packaging until they are to be fitted to the vehicle.

II - REFITTING OPERATION FOR PART CONCERNED

❑ Refit the injector rail.

❑ Without tightening, fit the injector rail nuts.

III - FINAL OPERATION

❑ Refit:

- the high pressure pipe between the injector rail and the diesel injectors (see **13B**, **Diesel injection**, **High-pressure pipe between the rail and injector: Removal - Refitting**, page **13B-87**) ,

- the high pressure pipe between the high pressure pump and the injector rail (see **13B**, **Diesel injection**, **High-pressure pipe between the pump and rail: Removal - Refitting**, page **13B-71**) ,
- the turbocharger air outlet pipe (see **12B**, **Turbocharging**, **Intercooler air inlet pipe: Removal - Refitting**, page **12B-41**) ,
- the engine cover.

❏ Connect the battery (see **Battery : Removal - Refitting**) (80A, Battery).

❏ Check the high pressure circuit (see **High pressure pipe: Checking**) .

❏ Apply the after repair procedure using the **diagnostic tool** :

- connect the **diagnostic tool**,
- select "Injection computer",
- go to repair mode,
- display the "After repair procedure" for the selected computer,
- select "Injector rail pressure sensor" in the section "List of components controlled by this computer",
- carry out the operations described in the "After repair procedure" section.

Injector rail: Removal - Refitting

K9K, and 834

Essential equipment
diagnostic tool

IMPORTANT
Wear leaktight gloves (Nitrile type) for this operation.

IMPORTANT
To avoid all risk of damage to the systems, apply the safety and cleanliness instructions and operation recommendations before carrying out any repair (see **13B**, **Diesel injection**, **Diesel injection: Precautions for repair**, page **13B-1**) .

WARNING
To avoid any corrosion or damage, protect the areas on which fuel is likely to run.

REMOVAL

I - REMOVAL PREPARATION OPERATION

❑ Disconnect the battery (see **Battery: Removal - Refitting**) (80A, Battery).

❑ Remove:

- the engine cover,
- the high pressure pipe between the high pressure pump and the injector rail (see **13B**, **Diesel injection**, **High-pressure pipe between the rail and injector: Removal - Refitting**, page **13B-87**) ,
- the high pressure pipe between the injector rail and the diesel injectors (see **13B**, **Diesel injection**, **High-pressure pipe between the rail and injector: Removal - Refitting**, page **13B-87**) .

II - OPERATION FOR REMOVAL OF PART CONCERNED

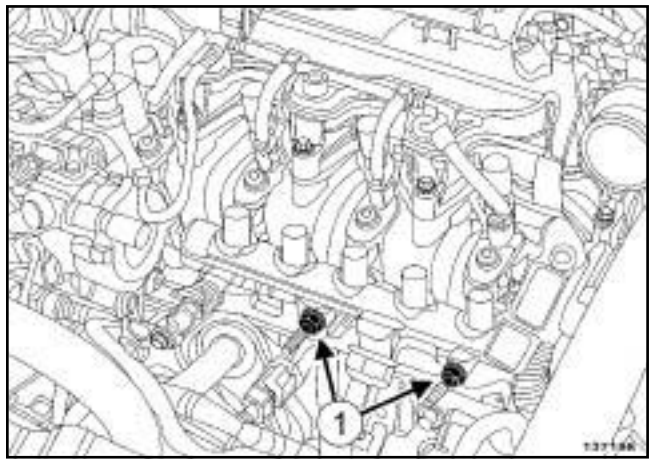

137186

❑ Remove:

- the nuts (**1**) from the injector rail,
- the injector rail.

REFITTING

I - REFITTING OPERATION FOR PART CONCERNED

❑ Refit the injector rail.

❑ Without tightening, fit the injector rail nuts.

II - FINAL OPERATION

❑ Refit:

- the high pressure pipe between the injector rail and the diesel injectors (see **13B**, **Diesel injection**, **High-pressure pipe between the rail and injector: Removal - Refitting**, page **13B-87**) ,
- the high pressure pipe between the high pressure pump and the injector rail (see **13B**, **Diesel injection**, **High-pressure pipe between the rail and injector: Removal - Refitting**, page **13B-87**) .
- the engine cover.

❑ Connect the battery (see **Battery : Removal - Refitting**) (80A, Battery).

❑ Check that there are no diesel leaks.

❑ Apply the after repair procedure using the **diagnostic tool** :

- connect the **diagnostic tool**,
- select "Injection computer",
- go to repair mode,

K9K, and 834

- display the "After repair procedure" for the selected computer,
- select "Injector rail pressure sensor" in the section "List of components controlled by this computer",
- carry out the operations described in the "After repair procedure" section.

K9K

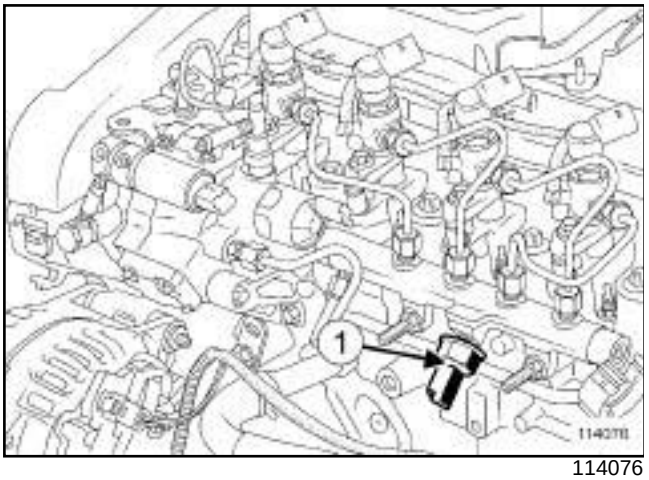

114076

- The injector rail pressure sensor (**1**) cannot be separated from the injector rail.
- In the event of a fault on the injector rail pressure sensor, replace the « injector rail - injector rail pressure sensor » assembly (see **13B**, **Diesel injection**, **Injector rail: Removal - Refitting**, page **13B-108**) .

K9K, and 832

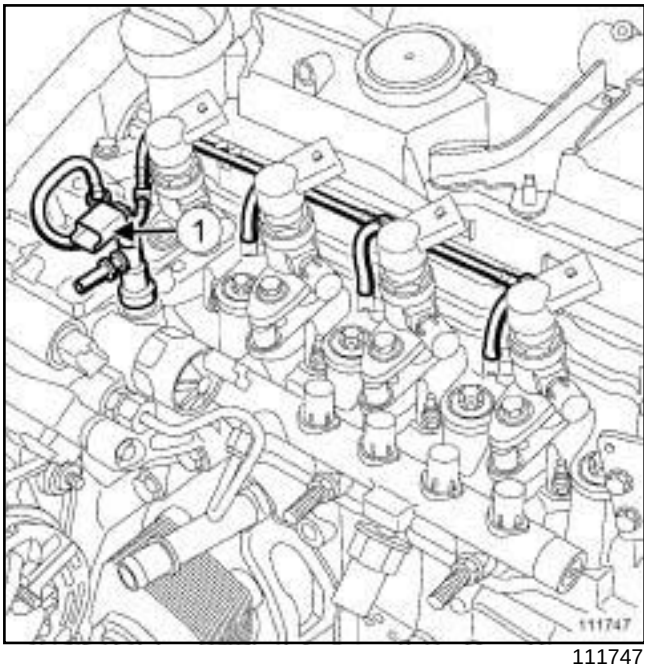

111747

- The fuel temperature sensor (**1**) cannot be saparated from the diesel injector fuel return rail.
- In the event of a fuel temperature sensor fault, replace the « diesel injector fuel return rail - fuel temperature sensor » assembly (see **13B**, **Diesel injection**, **Diesel injector fuel return rail: Removal - Refitting**, page **13B-63**) .

Fuel temperature sensor: Removal - Refitting

F9Q

REMOVAL

I - REMOVAL PREPARATION OPERATION

- Disconnect the battery (see **Battery: Removal - Refitting**) (80A, Battery).
- Remove the front engine cover.

F9Q

II - OPERATION FOR REMOVAL OF PART CONCERNED

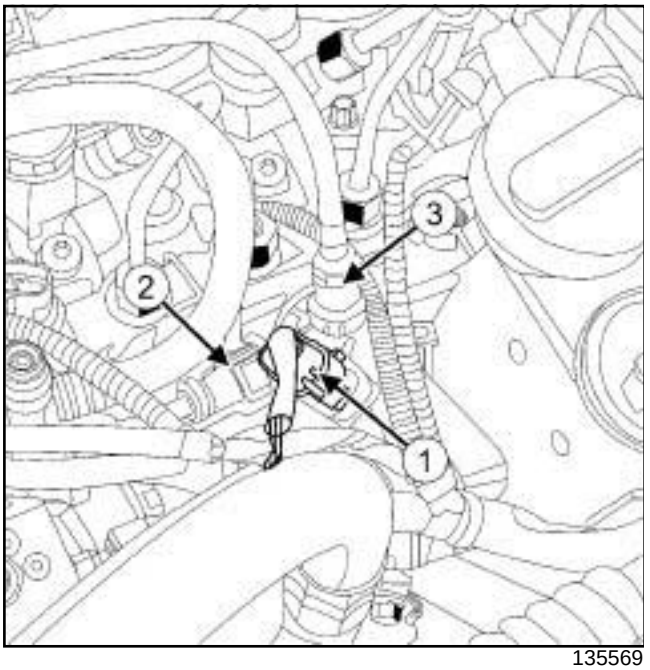

135569

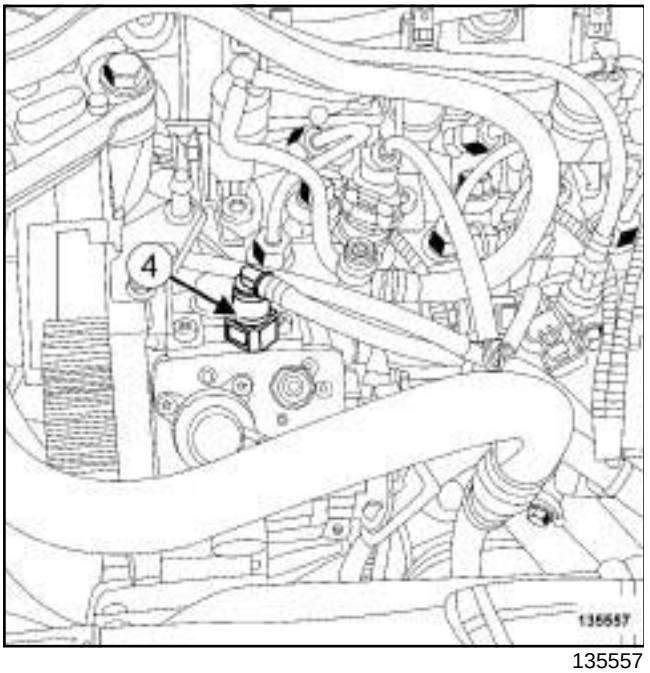

135557

❑

> **WARNING**
> Prepare for the flow of fluid, and protect the surrounding components.

❑ Disconnect:

- the fuel temperature sensor connector (**1**) ,
- the union (**2**) of the diesel injector fuel return rail,
- the diesel return pipe union (**3**) ,
- the union (**4**) of the fuel temperature sensor on the high pressure pump.

> **WARNING**
> To prevent impurities from entering the circuit, place protective plugs on all fuel circuit components exposed to the open air.

❑ Insert the blanking plugs.

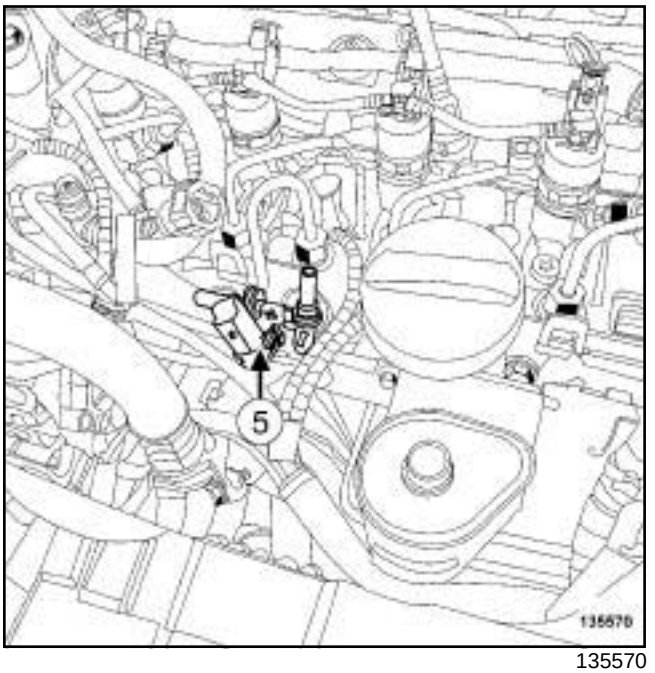

135570

❑ Remove the fuel temperature sensor (**5**) .

REFITTING

I - REFITTING PREPARATION OPERATION

❑

> **WARNING**
> Do not remove the blanking plugs from each component until the last moment.
>
> Also, do not remove the components from their packaging until they are to be fitted to the vehicle.

II - REFITTING OPERATION FOR PART CONCERNED

❑ Refit the fuel temperature sensor.

❑ Remove the blanking plugs.

❑ Connect:

- the union of the fuel temperature sensor to the high pressure pump,

F9Q

- the diesel return pipe union,
- the union of the diesel injector fuel return rail,
- the fuel temperature sensor connector.

III - FINAL OPERATION

❏ Refit the engine cover.

❏ Connect the battery (see **Battery : Removal - Refitting**) (80A, Battery).

K9K, and 834

Tightening torques ▽	
fuel temperature sensor	**15 N.m**

IMPORTANT
To avoid all risk of damage to the systems, apply the safety and cleanliness instructions and operation recommendations before carrying out any repair (see **13B**, **Diesel injection**, **Diesel injection: Precautions for repair**, page **13B-1**) .

IMPORTANT
Wear leaktight gloves (Nitrile type) for this operation.

Note:
Ensure you have a new fuel temperature sensor to hand before opening up the fuel circuit.

REMOVAL

I - REMOVAL PREPARATION OPERATION

❑ Remove the front engine cover.

II - OPERATION FOR REMOVAL OF PART CONCERNED

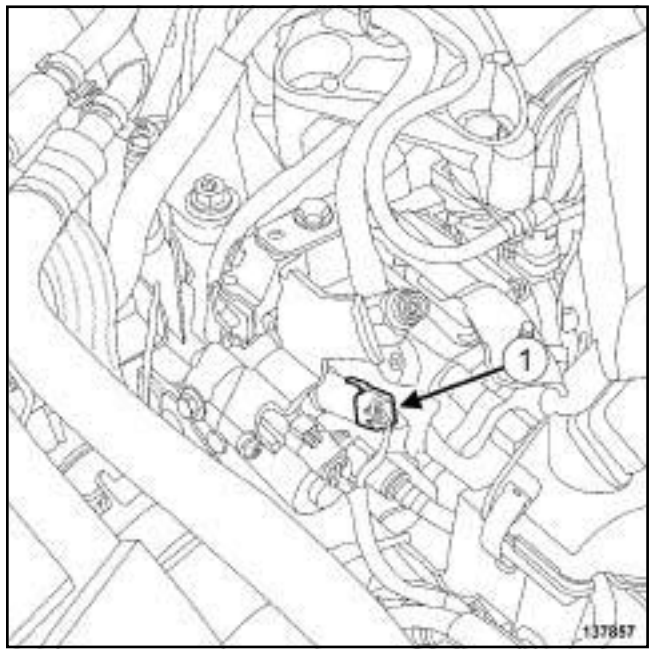

137857

❑ Disconnect the fuel temperature sensor connector (**1**) .

WARNING
To avoid any corrosion or damage, protect the areas on which fuel is likely to run.

WARNING
To prevent impurities from entering, once the fuel circuit is opened, it must not be blasted with compressed air. Use cleaning cloths only, if necessary.

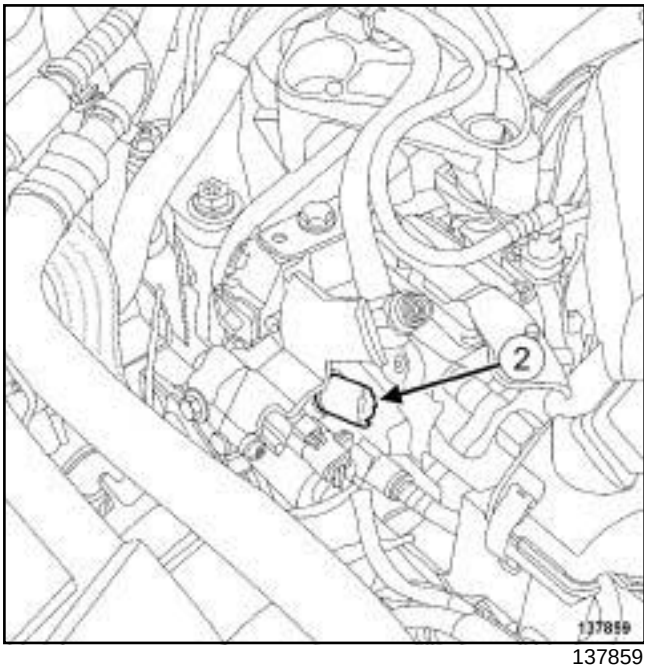

137859

❑ Remove the fuel temperature sensor (**2**) from the high pressure pump.

REFITTING

I - REFITTING PREPARATION OPERATION

❑

> Note:
>
> Do not lubricate the seals with grease or old diesel fuel. Use the applicator provided in the kit for the new part.

II - REFITTING OPERATION FOR PART CONCERNED

❑ Refit the fuel temperature sensor.

❑ Torque tighten the **fuel temperature sensor (15 N.m)**.

❑ Connect the fuel temperature sensor connector.

III - FINAL OPERATION

❑ Refit the engine cover.

Fuel temperature sensor: Removal - Refitting

K9K, and 830

Tightening torques ▽	
fuel temperature sensor	**15 N.m**

IMPORTANT
To avoid all risk of damage to the systems, apply the safety and cleanliness instructions and operation recommendations before carrying out any repair (see **13B**, **Diesel injection**, **Diesel injection: Precautions for repair**, page **13B-1**) .

IMPORTANT
Wear leaktight gloves (Nitrile type) for this operation.

WARNING
To avoid any corrosion or damage, protect the areas on which fuel is likely to run.

REMOVAL

I - REMOVAL PREPARATION OPERATION

❑ Remove the front engine cover.

❑ Disconnect the battery (see **Battery: Removal - Refitting**) (80A, Battery).

❑ Remove the turbocharger outlet air pipe (see **12B**, **Turbocharging**, **Intercooler air inlet pipe: Removal - Refitting**, page **12B-41**) .

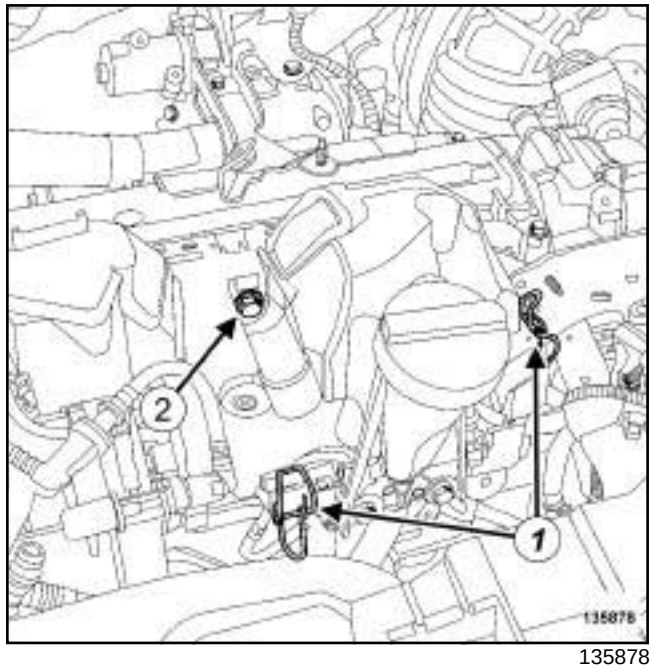

135878

❑ Unclip the injector rail protector cover at (**1**) .

❑ Remove:

- the injector rail protector cover bolt (**2**) ,
- the injection rail protector cover,

II - OPERATION FOR REMOVAL OF PART CONCERNED

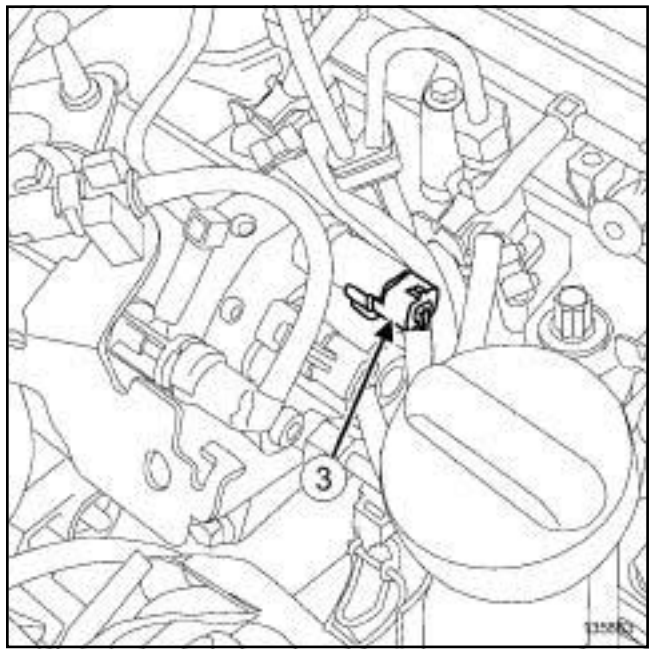

135863

❑ Disconnect the fuel temperature sensor connector (**3**) .

❑ Remove the fuel temperature sensor.

- Make sure that no impurities enter the high pressure pump when the fuel temperature sensor is removed.

> **WARNING**
> Do not blast with compressed air once the fuel circuit is open, otherwise impurities may enter the system. Only use cleaning cloths.

REFITTING

I - REFITTING OPERATION FOR PART CONCERNED

- Refit the fuel temperature sensor.
- Torque tighten the **fuel temperature sensor (15 N.m)**.
- Connect the fuel temperature sensor connector.

II - FINAL OPERATION

- Refit the injector rail protector cover.
- Clip on the injector rail protector cover.
- Refit the turbocharger air outlet pipe (see **12B**, **Turbocharging**, **Intercooler air inlet pipe: Removal - Refitting**, page **12B-41**) .
- Connect the battery (see **Battery : Removal - Refitting**) (80A, Battery).
- Start the engine.
- Check that there are no fuel leaks.
- Refit the engine cover.

K9K, and 832

Essential special tooling	
Mot. 1771	Kit for measuring SIEMENS injector leak rate.
Mot. 1711	Kit for measuring injector leak rate.

Essential equipment
self-contained starter
diagnostic tool

Tightening torques ▽	
intercooler air outlet pipe clip on the damper valve	**5.5 N.m**
intercooler air outlet pipe clip on the damper valve	**5.5 N.m**

IMPORTANT
To avoid all risk of damage to the systems, apply the safety and cleanliness instructions and operation recommendations before carrying out any repair (see **13B**, **Diesel injection**, **Diesel injection: Precautions for repair**, page **13B-1**) .

IMPORTANT
Wear leaktight gloves (Nitrile type) for this operation.

CHECKING

I - PREPARATION OPERATION FOR CHECK

❑ Remove the front engine cover.

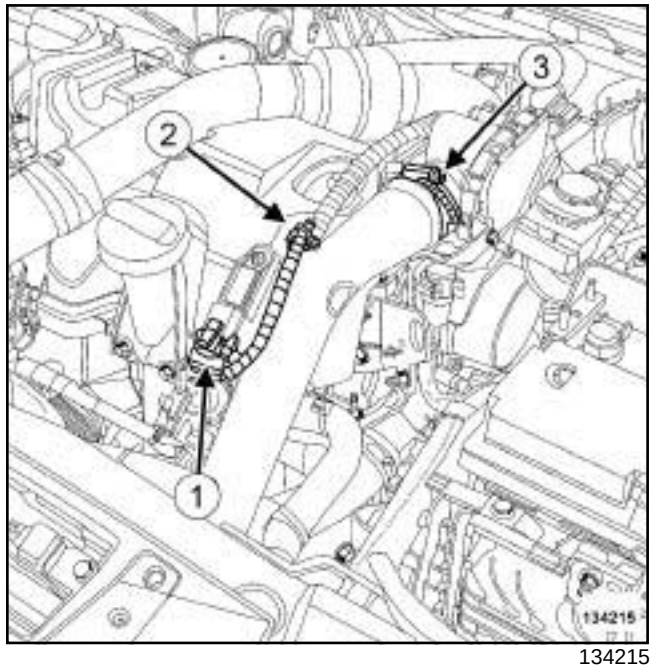

134215

❑ Disconnect the turbocharger pressure sensor connector (**1**) .

❑ Unclip the turbocharger pressure sensor wiring from the intercooler air outlet pipe at (**2**) .

❑ Loosen the clip (**3**) of the intercooler air outlet pipe from the damper valve.

❑ Disconnect the intercooler outlet air pipe from the damper valve.

❑ Move the intercooler outlet air pipe slightly away from the damper valve.

K9K, and 832

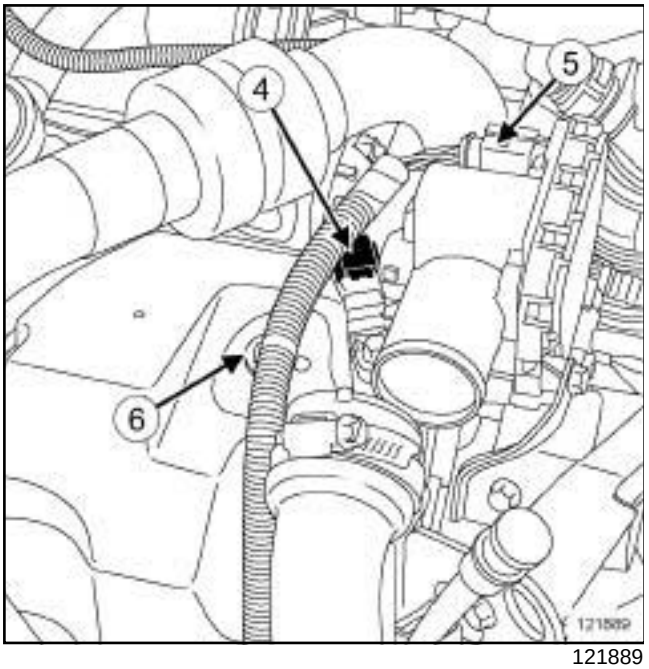

121889

❑ Disconnect:

- the connector (**4**) from the camshaft position sensor,
- the damper valve connector (**5**) .

❑ Unclip the damper valve wiring (**6**) from the injector rail protector cover.

❑ Remove the turbocharger outlet air pipe (see **12B**, **Turbocharging**, **Intercooler air inlet pipe: Removal - Refitting**, page **12B-41**) .

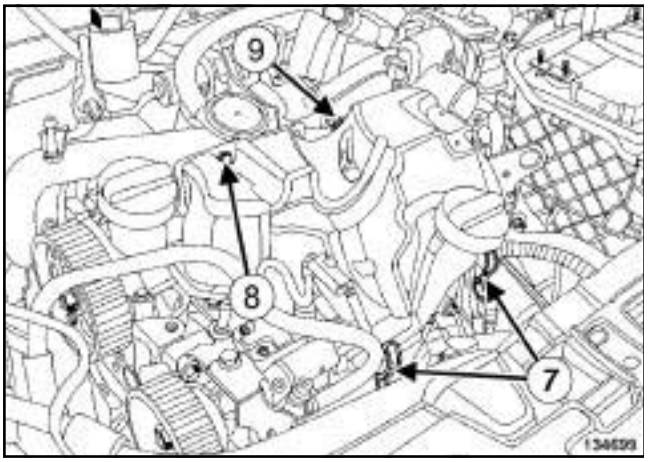

134699

❑ Unclip the injector rail protector cover at (**7**) .

❑ Remove:

- the injector rail protector cover bolt (**8**) ,
- the injector rail protector cover nut (**9**) ,
- the injection rail protector cover,

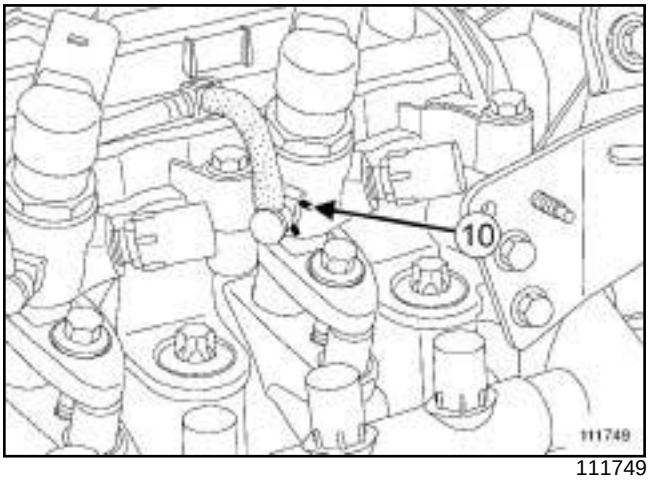

111749

❑

WARNING

Ensure that the clip is not completely removed from its housing, otherwise it may be damaged when the diesel return union is removed.

In the case where a clip has been completely removed from its housing, remove the injector concerned and replace the clip with a new clip (see **13B**, **Diesel injection**, **Diesel injector: Removal - Refitting**, page **13B-136**) .

❑ Using a thin, flat-blade screwdriver, push the lower tabs (**10**) of the diesel injector fuel return union clips towards the rocker cover to unlock them and position them fully up against the rocker cover.

K9K, and 832

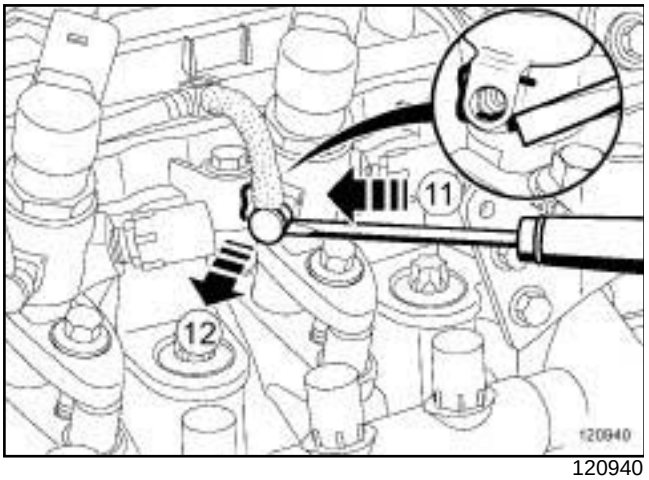

120940

❑

Note:

With sufficient force applied to the clip while pressing continuously with the screwdriver, the diesel injector fuel return rail unions will come out effortlessly.

WARNING

Do not use the screwdriver as a lever on the injector fuel return unions.

❑ Use a thin, flat-blade screwdriver to push down (**11**) on the lower tabs of the clips previously in contact with the rocker cover, without fully removing the clips from their injectors.

❑ Manually remove the diesel injector fuel return rail unions (**12**) , while pressing (**11**) on the lower tabs of the clips using a thin, flat-blade screwdriver.

❑ Fit appropriate blanking plugs on each union of the diesel injector fuel return rail.

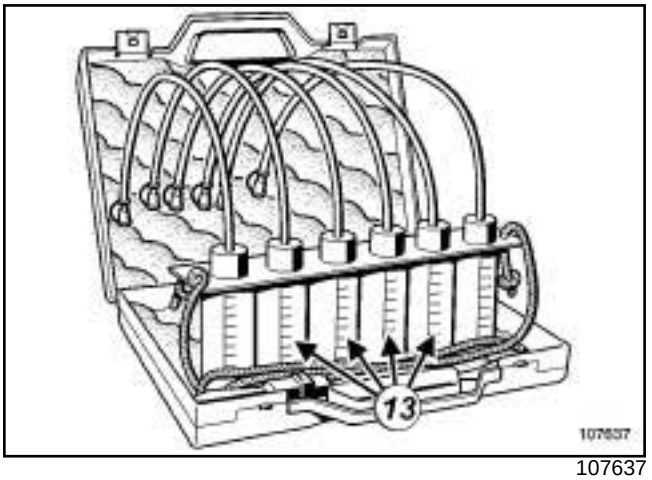

107637

❑ Connect the four transparent hoses of the tool **(Mot. 1771)** on the diesel injectors in place of each union of the diesel injector fuel return rail.

❑ Insert these hoses in the four graduated measuring cylinders (**13**) of the tool **(Mot. 1711)**.

❑ Connect:

- the camshaft position sensor connector,

- the connector to the damper flap.

❑ Fit the intercooler air outlet pipe.

❑ Connect the intercooler air outlet pipe on the damper valve.

❑ Torque tighten the **intercooler air outlet pipe clip on the damper valve (5.5 N.m)**.

❑ Refit the turbocharger air outlet pipe (see **12B**, **Turbocharging**, **Intercooler air inlet pipe: Removal - Refitting**, page **12B-41**) .

II - CHECKING OPERATION FOR PART CONCERNED

❑ Connect a **self-contained starter**.

❑ Force the vehicle's + after ignition feed.

❑ Connect the **diagnostic tool**.

❑ Run commands:

- RZ009 "Program vehicle functions",

- VP036 Inhibit fuel supply.

❑ Run the starter for **15 seconds**.

❑ Check that the diesel injector return volume is greater than or equal to **20 ml**.

❑ Repeat the starting phase twice, allowing an interval of **30 seconds** between each starting phase.

❑ Run command VP037 Stop fuel supply inhibition.

K9K, and 832

❑ Disconnect:

- the **diagnostic tool**,
- the **self-contained starter**.

III - FINAL OPERATION

❑ Remove the turbocharger outlet air pipe (see **12B**, **Turbocharging**, **Intercooler air inlet pipe: Removal - Refitting**, page **12B-41**) .

❑ Loosen the clip of the intercooler air outlet pipe from the damper valve.

❑ Disconnect:

- the intercooler air outlet pipe on the damper valve,
- the damper valve connector,
- the camshaft position sensor connector.

❑ Disconnect the four transparent pipes of the tool **(Mot. 1771)** from the diesel injectors.

> **WARNING**
> Check the condition of the seals on the fuel return unions on the injectors. Check that they are not cut or crushed, and have not come out of their grooves. Replace the entire diesel return pipe if one of the components is damaged

❑ Push the diesel injector fuel return union clips towards the front of the vehicle to place them into their original positions.

❑ Remove the blanking plug from each diesel injector fuel return rail opening.

❑ Lubricate the diesel injector fuel return unions with **SILICONE-FREE LUBRICANT** (see **Vehicle: Parts and ingredients for the repairwork**) (04B, Consumables - Products) until the seals are completely covered.

❑ Place the diesel injector fuel return rail unions in front of the diesel injector openings starting with injector number **4** (timing end).

❑ Clip the diesel injector fuel return rail unions on the diesel injectors starting with injector number **4** (timing end).

> Note:
> Check that the unions of the fuel return rail are correctly clipped.

❑ Refit:

- the injector rail protector cover,
- the injector rail protector cover nut,
- the injector rail protector cover bolt.

❑ Clip on the injector rail protector cover.

❑ Fit the damper valve wiring.

❑ Clip the damper valve wiring onto the injector rail protector cover.

❑ Connect:

- the camshaft position sensor connector,
- the connector to the damper flap.

❑ Fit the intercooler air outlet pipe.

❑ Connect the intercooler air outlet pipe on the damper valve.

❑ Clip the turbocharger pressure sensor wiring onto the intercooler air outlet pipe.

❑ Connect the turbocharger pressure sensor connector.

❑ Torque tighten the **intercooler air outlet pipe clip on the damper valve (5.5 N.m)**.

❑ Refit:

- the turbocharger air outlet pipe (see **12B**, **Turbocharging**, **Intercooler air inlet pipe: Removal - Refitting**, page **12B-41**) ,
- the engine cover.

K9K, and 830

Essential special tooling	
Mot. 1771	Kit for measuring SIEMENS injector leak rate.
Mot. 1711	Kit for measuring injector leak rate.

Essential equipment
self-contained starter
diagnostic tool

IMPORTANT
To avoid all risk of damage to the systems, apply the safety and cleanliness instructions and operation recommendations before carrying out any repair (see **13B**, **Diesel injection**, **Diesel injection: Precautions for repair**, page **13B-1**) .

IMPORTANT
Wear leaktight gloves (Nitrile type) for this operation.

CHECKING

I - PREPARATION OPERATION FOR CHECK

❑ Remove:

- the engine cover,
- the turbocharger air outlet pipe (see **12B**, **Turbocharging**, **Intercooler air inlet pipe: Removal - Refitting**, page **12B-41**) .

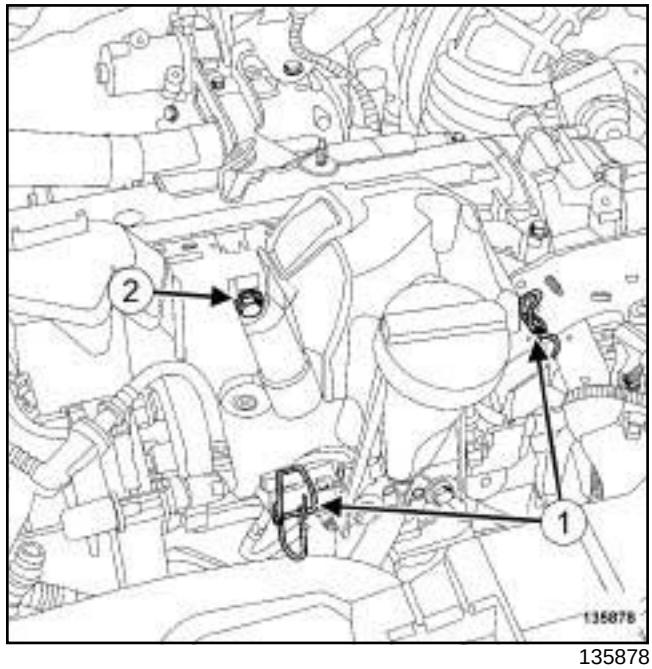

135878

❑ Unclip the injector rail protector cover at (**1**) .

❑ Remove:

- the injector rail protector cover bolt (**2**) ,
- the injection rail protector cover,

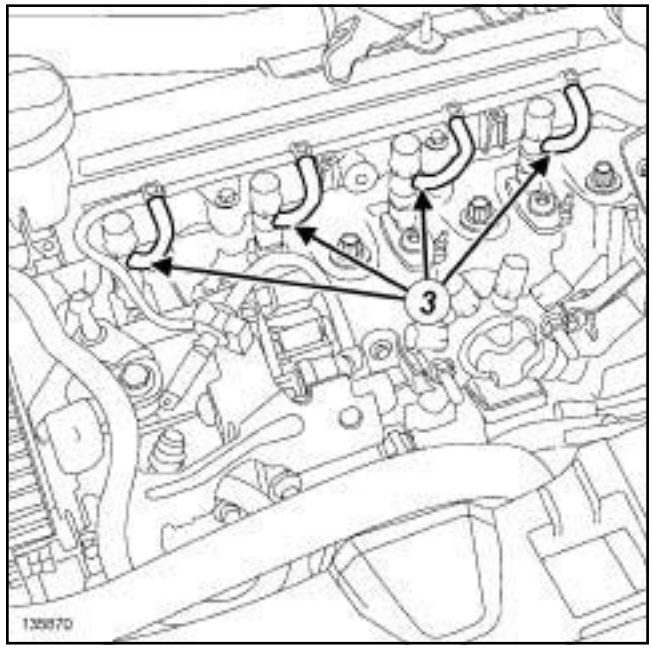

135870

❑ Disconnect the fuel return rail (**3**) from each diesel injector.

K9K, and 830

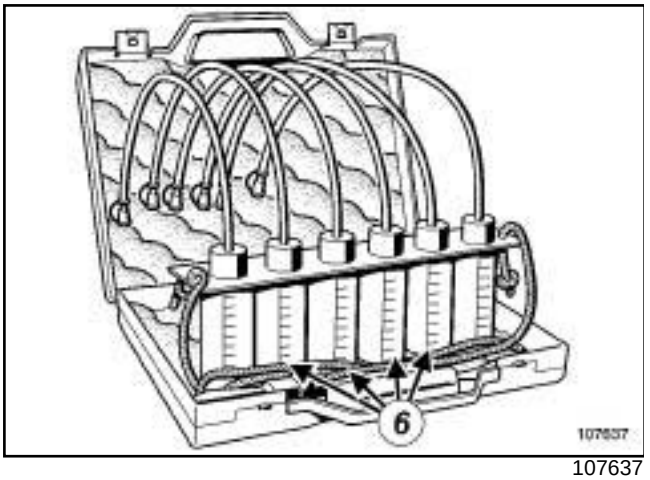

107637

- ❑ Connect the four transparent hoses of the tool **(Mot. 1771)** on the diesel injectors in place of each union of the diesel injector fuel return rail.
- ❑ Insert these hoses in the four graduated measuring cylinders (**6**) of the tool **(Mot. 1711)**.
- ❑ Refit the turbocharger air outlet pipe (see **12B**, **Turbocharging**, **Intercooler air inlet pipe: Removal - Refitting**, page **12B-41**) .

II - CHECKING OPERATION FOR PART CONCERNED

- ❑ Connect a **self-contained starter**.
- ❑ Force the vehicle's + after ignition feed.
- ❑ Connect the **diagnostic tool**.
- ❑ Run commands:
  - RZ009 Vehicle function programming,
  - VP036 Inhibit fuel supply.
- ❑ Run the starter for **15 seconds**.
- ❑ Check that the injector return volume is greater than or equal to **20 ml**.
- ❑ Repeat the starting phase twice, allowing an interval of **30 seconds** between each starting phase.
- ❑ Run command VP037 Stop fuel supply inhibition.
- ❑ Disconnect:
  - the **diagnostic tool**,
  - the **self-contained starter**.

III - FINAL OPERATION

- ❑ Remove the turbocharger outlet air pipe (see **12B**, **Turbocharging**, **Intercooler air inlet pipe: Removal - Refitting**, page **12B-41**) .
- ❑ Disconnect the four transparent pipes of the tool **(Mot. 1771)** from the diesel injectors.
- ❑ Connect the diesel injector fuel return rail unions to the diesel injectors.

> Note:
>
> Check that the unions of the fuel return rail are correctly connected.

- ❑ Refit:
  - the injector rail protector cover,
  - the injector rail protector cover bolt.
- ❑ Clip on the injector rail protector cover.
- ❑ Refit:
  - the turbocharger air outlet pipe (see **12B**, **Turbocharging**, **Intercooler air inlet pipe: Removal - Refitting**, page **12B-41**) ,
  - the engine cover.

K9K, and 834

Essential special tooling	
Mot. 1771	Kit for measuring SIEMENS injector leak rate.
Mot. 1711	Kit for measuring injector leak rate.

Essential equipment
self-contained starter
diagnostic tool

IMPORTANT
To avoid all risk of damage to the systems, apply the safety and cleanliness instructions and operation recommendations before carrying out any repair (see **13B**, **Diesel injection**, **Diesel injection: Precautions for repair**, page **13B-1**) .

IMPORTANT
Wear leaktight gloves (Nitrile type) for this operation.

CHECKING

I - PREPARATION OPERATION FOR CHECK

❑ Remove the front engine cover.

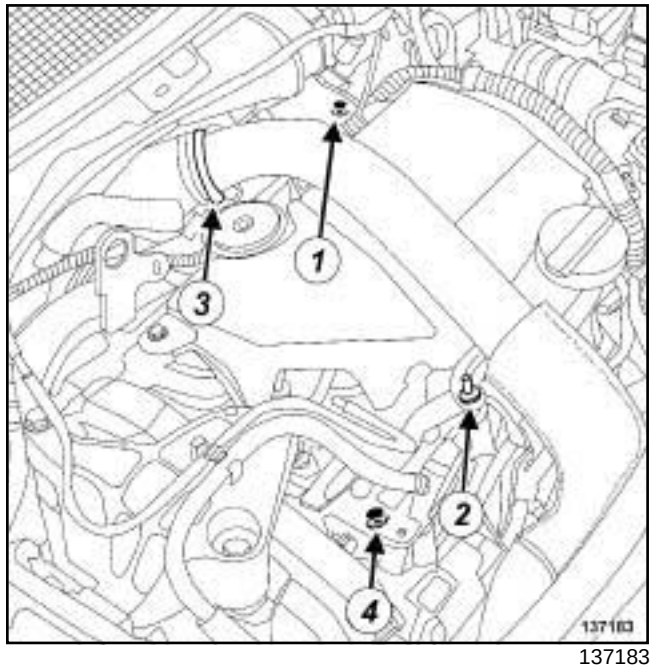

137183

❑ Remove:

- the bolt (**1**) of the intermediate air pipe between the turbocharger and the intercooler,
- the nut (**2**) of the intermediate air pipe between the turbocharger and the intercooler.

❑ Pull the clip (**3**) of the turbocharger air outlet pipe.

❑ Move the intermediate air pipe between the turbocharger and the intercooler away from the turbocharger air outlet pipe.

❑ Remove:

- the bolt (**4**) of the retaining bracket of the intermediate air pipe between the turbocharger and the intercooler,
- the retaining bracket of the intermediate air pipe between the turbocharger and the intercooler.

K9K, and 834

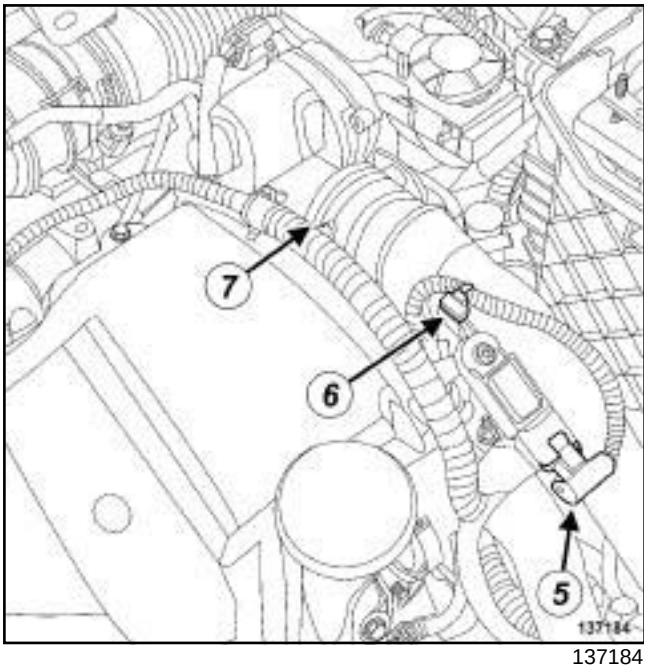

137184

- ❑ Disconnect the turbocharger pressure sensor connector (**5**) .
- ❑ Unclip the turbocharger pressure sensor cable (**6**) from the intercooler air outlet pipe.
- ❑ Pull the clip (**7**) of the intercooler air outlet pipe.
- ❑ Move the intercooler outlet air pipe to one side.

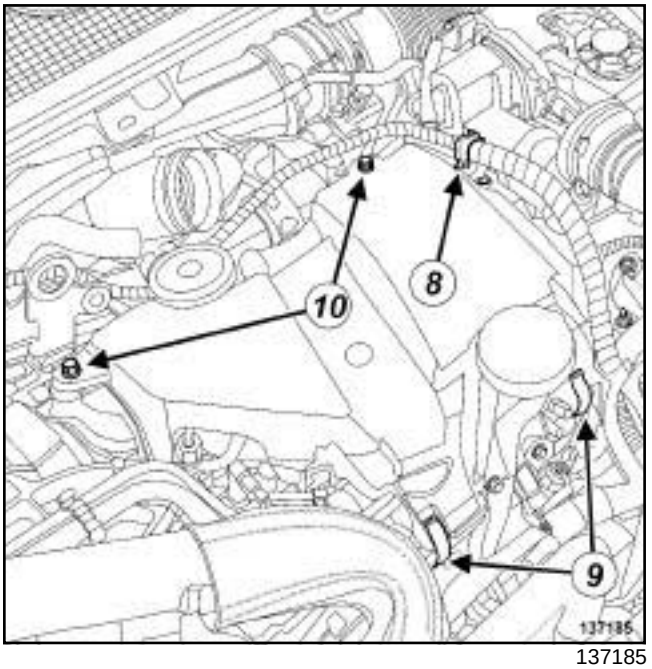

137185

- ❑ Unclip the damper valve wiring from the injector rail protector at (**8**) .
- ❑ Unclip the injector rail protector cover at (**9**) .
- ❑ Remove:

  - the bolts (**10**) from the injector rail protector cover,

  - the injector rail protector.

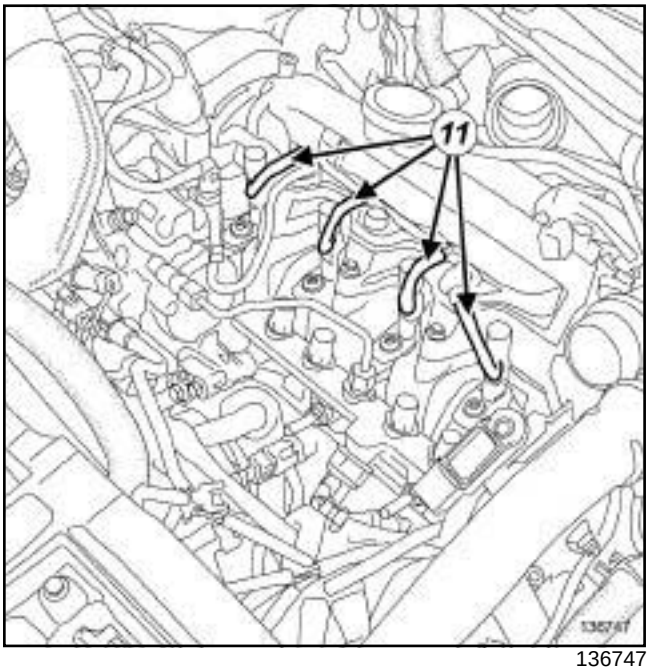

136747

- ❑ Disconnect the fuel return rail (**11**) from each diesel injector.

K9K, and 834

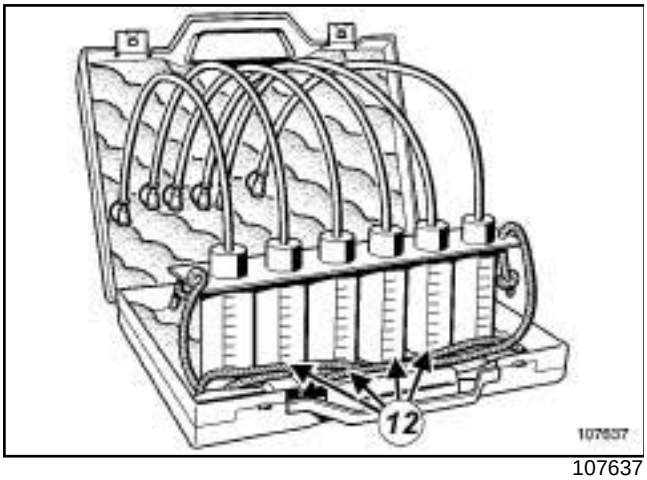

107637

- ❑ Connect the four transparent hoses of the tool **(Mot. 1771)** on the diesel injectors in place of each union of the diesel injector fuel return rail.
- ❑ Insert these hoses in the four graduated measuring cylinders (**12**) of the tool **(Mot. 1711)**.
- ❑ Refit the clip of the intercooler air outlet pipe.
- ❑ Clip the intercooler air outlet pipe on the damper valve.
- ❑ Connect the turbocharger pressure sensor connector.
- ❑ Refit the clip of the turbocharger air outlet pipe.
- ❑ Clip the intermediate air pipe between the turbocharger and the intercooler onto the turbocharger air outlet pipe.

II - CHECKING OPERATION FOR PART CONCERNED

- ❑ Connect a **self-contained starter**.
- ❑ Force the vehicle's + after ignition feed.
- ❑ Connect the **diagnostic tool**.
- ❑ Run commands:
  - RZ009 Vehicle function programming,
  - VP036 Inhibit fuel supply.
- ❑ Run the starter for **15 seconds**.
- ❑ Check that the injector return volume is greater than or equal to **20 ml**.
- ❑ Repeat the starting phase twice, allowing an interval of **30 seconds** between each starting phase.
- ❑ Run command VP037 Stop fuel supply inhibition.
- ❑ Disconnect:
  - the **diagnostic tool**,
  - the **self-contained starter**.

III - FINAL OPERATION

- ❑ Remove the clip from the turbocharger air outlet pipe.
- ❑ Move the intermediate air pipe between the turbocharger and the intercooler away from the turbocharger air outlet pipe.
- ❑ Disconnect the turbocharging pressure sensor connector.
- ❑ Remove the clip from the intercooler air outlet pipe.
- ❑ Move the intercooler outlet air pipe to one side.
- ❑ Always replace:
  - the turbocharger air outlet pipe seal,
  - the intercooler air outlet pipe seal.
- ❑ Remove:
  - the turbocharger air outlet pipe seal,
  - the intercooler air outlet pipe seal.
- ❑ Disconnect the four transparent pipes of the tool **(Mot. 1771)** from the diesel injectors.
- ❑ Connect the diesel injector fuel return rail unions to the diesel injectors.

> Note:
>
> Check that the unions of the fuel return rail are correctly connected.

- ❑ Refit:
  - the injector rail protector,
  - the injector rail protector cover bolts.
- ❑ Clip the injector rail protector cover into place.
- ❑ Refit:
  - the new seal of the turbocharger air outlet pipe in the turbocharger air outlet pipe,
  - the new seal of the intercooler air outlet pipe in the intercooler air outlet pipe.
- ❑ Clip on the damper valve wiring.
- ❑ Refit the clip of the intercooler air outlet pipe.
- ❑ Clip the intercooler air outlet pipe on the damper valve.
- ❑ Clip the turbocharger pressure sensor cable on the intercooler air outlet pipe.
- ❑ Connect the turbocharger pressure sensor connector.

K9K, and 834

❏ Refit:

- the retaining bracket of the intermediate air pipe between the turbocharger and the intercooler,
- the bolt of the retaining bracket of the intermediate air pipe between the turbocharger and the intercooler,
- the clip of the turbocharger air outlet pipe.

❏ Clip the intermediate air pipe between the turbocharger and the intercooler onto the turbocharger air outlet pipe.

❏ Refit:

- the bolt of the intermediate air pipe between the turbocharger and the intercooler,
- the nut of the intermediate air pipe between the turbocharger and the intercooler,
- the engine cover.

K9K, and 832

Essential equipment
compressed air nozzle

Tightening torques ▽	
bolt of the diesel injector(s)	**30 N.m**

IMPORTANT

To avoid all risk of damage to the systems, apply the safety and cleanliness instructions and operation recommendations before carrying out any repair (see **13B**, **Diesel injection**, **Diesel injection: Precautions for repair**, page **13B-1**) .

IMPORTANT

Wear leaktight gloves (Nitrile type) for this operation.

REMOVAL

I - REMOVAL PREPARATION OPERATION

❑ Remove the front engine cover.

❑ Disconnect the battery (see **Battery: Removal - Refitting**) (80A, Battery).

❑ Remove:

- the diesel injector fuel return rail (see **13B**, **Diesel injection**, **Diesel injector fuel return rail: Removal - Refitting**, page **13B-63**) ,
- the high pressure pipe(s) between the injector rail and the diesel injector(s) (see **13B**, **Diesel injection**, **High-pressure pipe between the rail and injector: Removal - Refitting**, page **13B-87**) .

II - OPERATION FOR REMOVAL OF PART CONCERNED

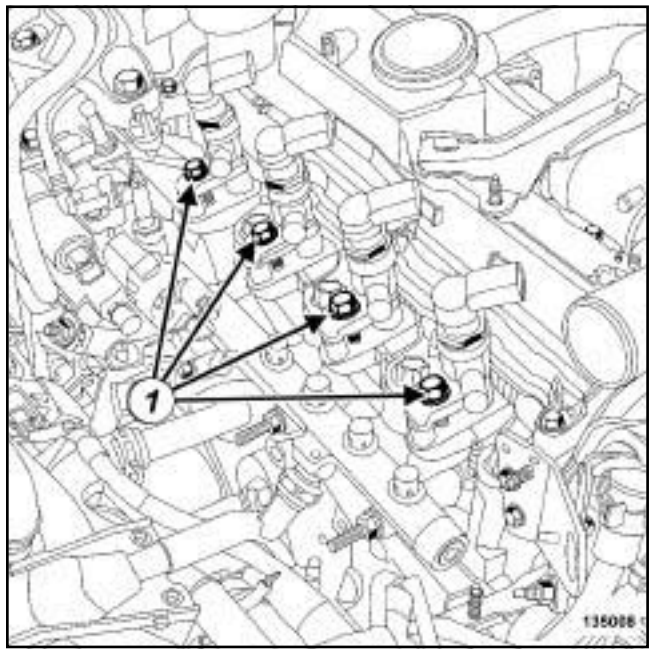

135008

❑ Remove:

- the bolt (**1**) from the bracket on the diesel injector(s) concerned,
- the bracket of the diesel injector(s) concerned,
- the spacer of the diesel injector bracket concerned,
- the diesel injector(s) concerned,
- the compression washer located at the bottom of the diesel injector well concerned.

K9K, and 832

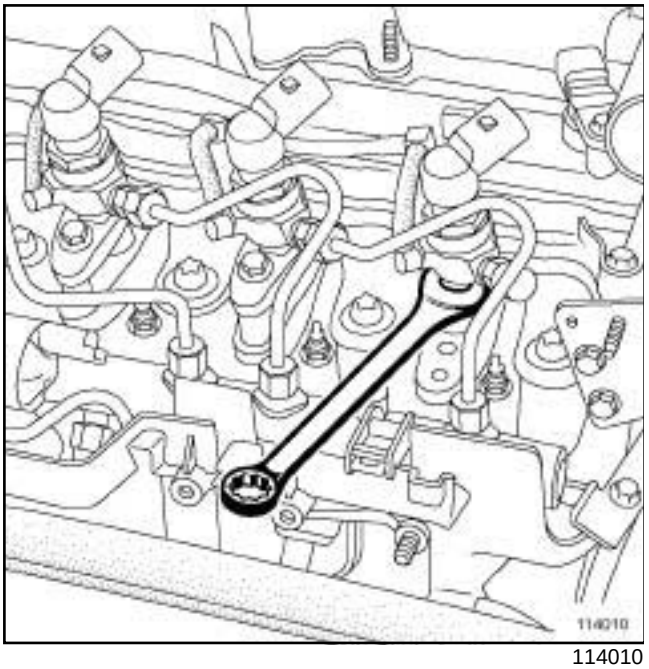

114010

❑

> Note:
>
> If a diesel injector is stuck in its well and does not come out, turn the diesel injector at the flat surface of the diesel injector clamp using a **13 mm** open-ended spanner.

❑ Remove the diesel injector(s) from the well.

> Note:
>
> If reusing the diesel injector(s) keep them in a hermetically sealed bag throughout the removal operation.

❑ Fit the appropriate blanking plug on the diesel injector nose.

REFITTING

I - REFITTING PREPARATION OPERATION

❑

> **WARNING**
>
> Do not remove the blanking plugs from each component until the last moment.
>
> Also, do not remove the components from their packaging until they are to be fitted to the vehicle.

❑ **parts always to be replaced: injector seal (11,11, 02,02)**.

Cleaning the injector well and the injector

❑

> **WARNING**
>
> It is strictly forbidden to clean the injectors with:
>
> - a wire brush,
> - an emery cloth,
> - an ultrasonic cleaner.

> **IMPORTANT**
>
> Wear leaktight gloves (Nitrile type) for this operation.

❑ Soak the diesel injector in **INJECTOR CLEANING PRODUCT** (see **Vehicle: Parts and ingredients for the repairwork**) (04B, Consumables - Products).

❑ Clean the diesel injector nozzle:

- either using **CLEANING CLOTHS** (see **Vehicle: Parts and ingredients for the repairwork**) (04B, Consumables - Products) soaked in **INJECTOR CLEANING PRODUCT** (see **Vehicle: Parts and ingredients for the repairwork**) (04B, Consumables - Products),
- or using a small brush with plastic bristles.

> **WARNING**
>
> It is strictly forbidden to clean the injectors with:
>
> - a wire brush,
> - an emery cloth,
> - an ultrasonic cleaner.

❑ Wipe using **CLEANING RAGS** (see **Vehicle: Parts and ingredients for the repairwork**) (04B, Consumables - Products).

> **IMPORTANT**
>
> Wear leaktight gloves (Nitrile type) for this operation.

K9K, and 832

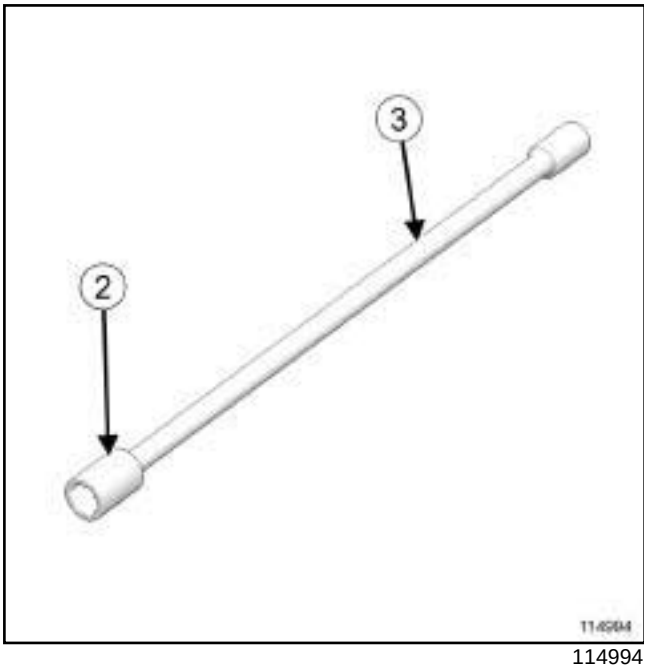

114994

- ❑ Fit a **11mm** by **1/4"** socket (**2**) (socket outer Ø = washer Ø) on an extension piece (**3**) .
- ❑ Wrap a **CLEANING CLOTH** (see **Vehicle: Parts and ingredients for the repairwork**) (04B, Consumables - Products) around the "socket - extension piece" assembly.
- ❑ Soak a **CLEANING CLOTH** in **INJECTOR CLEANING PRODUCT** (see **Vehicle: Parts and ingredients for the repairwork**) (04B, Consumables - Products).
- ❑ Insert the wipe-covered extension piece and end piece down into the bottom of the well.
- ❑ Clean the injector well (pay particular attention to the mating face of the washer).

> Note:
>
> Swivel the cloth-covered socket and extension piece around inside the well.

- ❑ Remove the **CLEANING CLOTH** from the well.

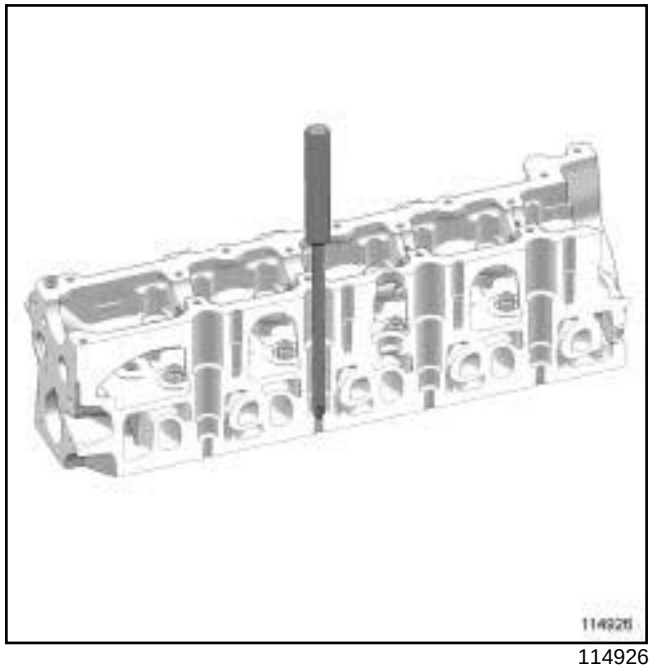
114926

- ❑ Insert a large diameter Phillips screwdriver (Ø > **8 mm**) into the well to block the opening to the combustion chamber.
- ❑ Blast out any scale residue in the well using a **compressed air nozzle**.
- ❑ Remove the screwdriver and repeat the cleaning operation for the diesel injector well concerned twice in succession.

II - REFITTING OPERATION FOR PART CONCERNED

- ❑

> **WARNING**
>
> Do not remove the blanking plugs from each component until the last moment.
>
> Also, do not remove the components from their packaging until they are to be fitted to the vehicle.

- ❑ Remove the blanking plug from the diesel injector nose.
- ❑ Refit:
  - the new compression washer,
  - the diesel injector(s),
  - the spacer of the diesel injector bracket,
  - the bracket of the diesel injector(s),
  - the bolt of the diesel injector bracket.
- ❑ Torque tighten the **bolt of the diesel injector(s) (30 N.m)**.

K9K, and 832

III - FINAL OPERATION

❏ Refit:

- the high pressure pipe(s) between the injector rail and the diesel injector(s) (see **13B**, **Diesel injection**, **High-pressure pipe between the rail and injector: Removal - Refitting**, page **13B-87**) ,
- the diesel injector fuel return rail (see **13B**, **Diesel injection**, **Diesel injector fuel return rail: Removal - Refitting**, page **13B-63**) .

❏ Connect the battery (see **Battery : Removal - Refitting**) (80A, Battery).

❏ Check that there are no diesel leaks.

❏ Refit the engine cover.

K9K, and 830

Essential equipment
open-ended spanner
compressed air nozzle
diagnostic tool

Tightening torques ▽	
bolts of the diesel injector bracket	**28 N.m**

IMPORTANT
To avoid all risk of damage to the systems, apply the safety and cleanliness instructions and operation recommendations before carrying out any repair (see **13B**, **Diesel injection**, **Diesel injection: Precautions for repair**, page **13B-1**) .

IMPORTANT
Wear leaktight gloves (Nitrile type) for this operation.

REMOVAL

I - REMOVAL PREPARATION OPERATION

❑ Disconnect the battery (see **Battery: Removal - Refitting**) (80A, Battery).

❑ Remove:

- the engine cover,
- the high pressure pipe(s) between the injector rail and the diesel injector(s) (see **13B**, **Diesel injection**, **High-pressure pipe between the rail and injector: Removal - Refitting**, page **13B-87**) .

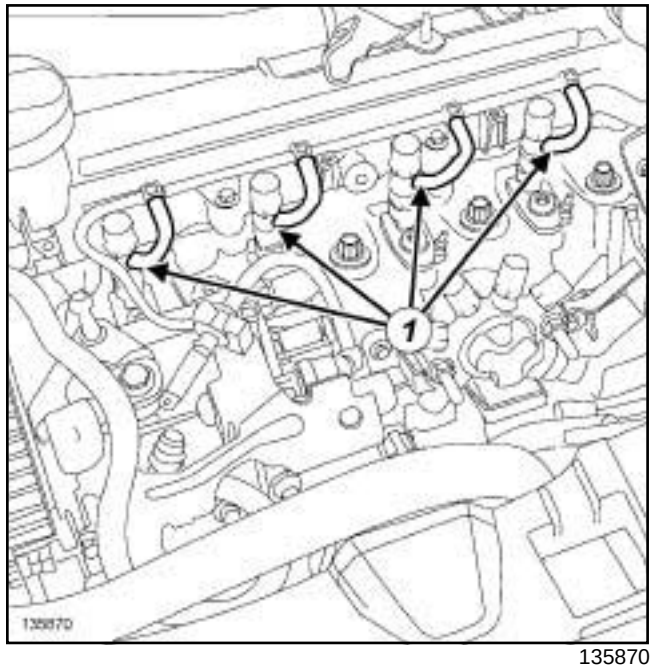

135870

❑ Clean the unions of the diesel injector return rail at the diesel injectors (see **13B**, **Diesel injection**, **Diesel injection: Precautions for repair**, page **13B-1**) .

WARNING
To avoid any corrosion or damage, protect the areas on which fuel is likely to run.

❑ Disconnect the diesel injector fuel return rail from the diesel injectors (**1**) .

❑ Fit an appropriate blanking plug on each diesel injector.

Note:
It is essential to fit an appropriate blanking plug to the Venturi to avoid depriming the fuel return circuit.

K9K, and 830

II - OPERATION FOR REMOVAL OF PART CONCERNED

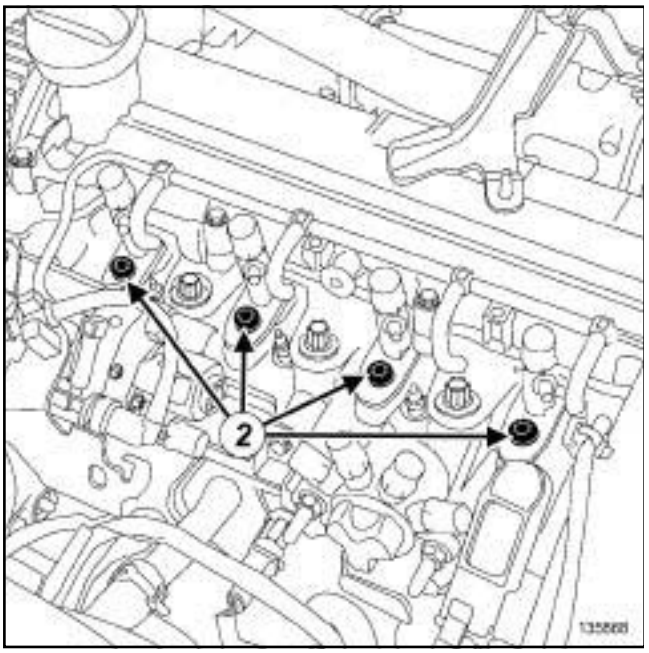

135868

❑

> Note:
>
> If reusing one or more diesel injectors, it is essential to mark the injector in relation to its cylinder before removing it. If reusing the diesel injector(s) keep them in a hermetically sealed bag throughout the removal operation.

❑ Remove:

- the bolt (**2**) from the bracket on the diesel injector(s) concerned,
- the diesel injector bracket,
- the compression washer located at the bottom of the diesel injector well concerned.

> Note:
>
> If the diesel injector is stuck in the well and does not come out, turn the diesel injector at the flat surface of the diesel injector bracket using an **open-ended spanner**.

❑ Fit the appropriate blanking plug on the diesel injector nose.

REFITTING

I - REFITTING PREPARATION OPERATION

❑

> **WARNING**
>
> Do not remove the blanking plugs from each component until the last moment.
>
> Also, do not remove the components from their packaging until they are to be fitted to the vehicle.

❑ **parts always to be replaced: injector seal (11,11, 02,02)**.

Cleaning the diesel injector well

❑

> **WARNING**
>
> It is strictly forbidden to clean the injectors with:
>
> - a wire brush,
> - an emery cloth,
> - an ultrasonic cleaner.

> **IMPORTANT**
>
> Wear leaktight gloves (Nitrile type) for this operation.

❑ Soak the diesel injector(s) in **INJECTOR CLEANING PRODUCT** (see **Vehicle: Parts and ingredients for the repairwork**) (04B, Consumables - Products).

❑ Clean the diesel injector nozzle:

- either using **CLEANING CLOTHS** (see **Vehicle: Parts and ingredients for the repairwork**) (04B, Consumables - Products) soaked in **INJECTOR CLEANING PRODUCT** (see **Vehicle: Parts and ingredients for the repairwork**) (04B, Consumables - Products),
- or using a small brush with plastic bristles.

> **WARNING**
>
> It is strictly forbidden to clean the injectors with:
>
> - a wire brush,
> - an emery cloth,
> - an ultrasonic cleaner.

K9K, and 830

❑ Wipe using **CLEANING RAGS** (see **Vehicle: Parts and ingredients for the repairwork**) (04B, Consumables - Products).

IMPORTANT

Wear leaktight gloves (Nitrile type) for this operation.

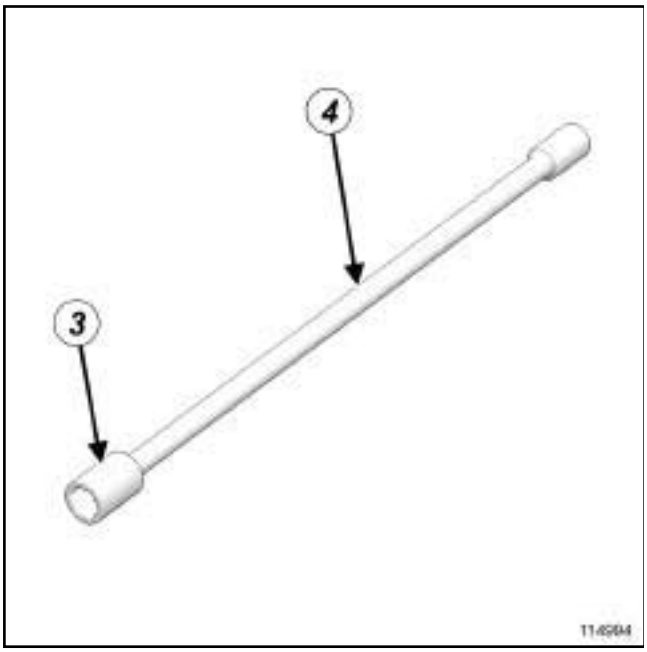

114994

❑ Fit an **11mm** by **1/4"** socket (**3**) (socket outer Ø = washer Ø) on an extension piece (**4**) .

❑ Wrap a **CLEANING CLOTH** (see **Vehicle: Parts and ingredients for the repairwork**) (04B, Consumables - Products) around the "socket - extension piece" assembly.

❑ Soak a **CLEANING CLOTH** in **INJECTOR CLEANING PRODUCT** (see **Vehicle: Parts and ingredients for the repairwork**) (04B, Consumables - Products).

❑ Insert the wipe-covered extension piece and end piece down into the bottom of the well.

❑ Clean the diesel injector well (pay particular attention to the mating face of the washer).

Note:

Swivel the cloth covered socket and extension piece around inside the well.

❑ Remove the **CLEANING CLOTH** from the well.

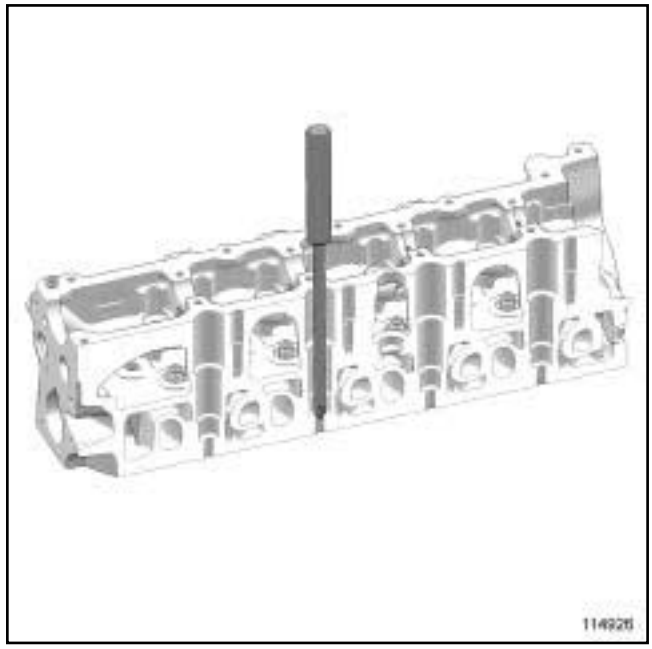

114926

❑ Insert a large diameter Phillips screwdriver (Ø > **8 mm**) into the well to block the opening to the combustion chamber.

❑ Blast out any scale residue in the well using a **compressed air nozzle**.

❑ Remove the screwdriver and repeat the cleaning operation for the injector well(s) concerned twice in succession.

II - REFITTING OPERATION FOR PART CONCERNED

❑

WARNING

Do not remove the blanking plugs from each component until the last moment.

Also, do not remove the components from their packaging until they are to be fitted to the vehicle.

❑ Refit:

- a new compression washer,
- the diesel injector(s),
- the diesel injector bracket,
- the bolt of the diesel injector bracket.

K9K, and 830

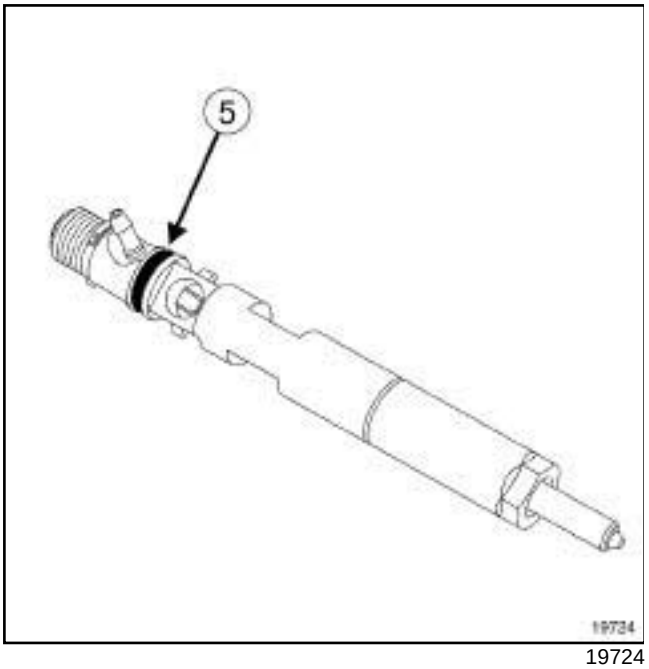

19724

❑

Note:

If reusing a diesel injector, refit the injector in the cylinder marked beforehand. If reusing a diesel injector, note the alphanumeric code (**5**) of the injector and the cylinder on which it is fitted.

❑ Torque tighten the **bolts of the diesel injector bracket (28 N.m)**.

III - FINAL OPERATION

❑ Remove the blanking plug of each diesel injector.

❑ Refit the high pressure pipe(s) between the injector rail and the diesel injector(s) (see **13B**, **Diesel injection**, **High-pressure pipe between the rail and injector: Removal - Refitting**, page **13B-87**) .

❑ Connect the diesel injector fuel return rail to the diesel injector.

❑ Check that there are no fuel leaks.

❑ Connect the battery (see **Battery : Removal - Refitting**) (80A, Battery).

❑ Refit the engine cover.

❑ Apply the after repair procedure using the **diagnostic tool** :

- connect the **diagnostic tool**,
- select "Injection computer",
- go to repair mode,
- display the "Before/after repair procedure" for the computer selected,
- select "Injector" in the "List of components stored by this computer" section,
- carry out the operations described in the "After repair procedure" section.

F9Q

Essential special tooling	
Mot. 1817	Injector well cleaning kit

Essential equipment
diagnostic tool

Tightening torques ▽	
diesel injector bracket bolt	**25 N.m**

IMPORTANT
To avoid all risk of damage to the systems, apply the safety and cleanliness instructions and operation recommendations before carrying out any repair (see **13B**, **Diesel injection**, **Diesel injection: Precautions for repair**, page **13B-1**) .

IMPORTANT
Wear leaktight gloves (Nitrile type) for this operation.

WARNING
To avoid any corrosion or damage, protect the areas on which fuel is likely to run.

REMOVAL

I - REMOVAL PREPARATION OPERATION

❑ Disconnect the battery (see **Battery: Removal - Refitting**) (80A, Battery).

❑ Remove:

- the engine cover,
- the injector rail protector (see **13B**, **Diesel injection**, **Injector rail protector: Removal - Refitting**, page **13B-70**) ,
- the diesel injector fuel return rail (see **13B**, **Diesel injection**, **Diesel injector fuel return rail: Removal - Refitting**, page **13B-63**) ,
- the high pressure pipes between the rail and the injector (see **13B**, **Diesel injection**, **High-pressure pipe between the rail and injector: Removal - Refitting**, page **13B-87**) .

II - OPERATION FOR REMOVAL OF PART CONCERNED

❑ If one or more injectors are re-used, always mark a removed injector in relation to its cylinder.

Note:
an injector corresponds to a cylinder.

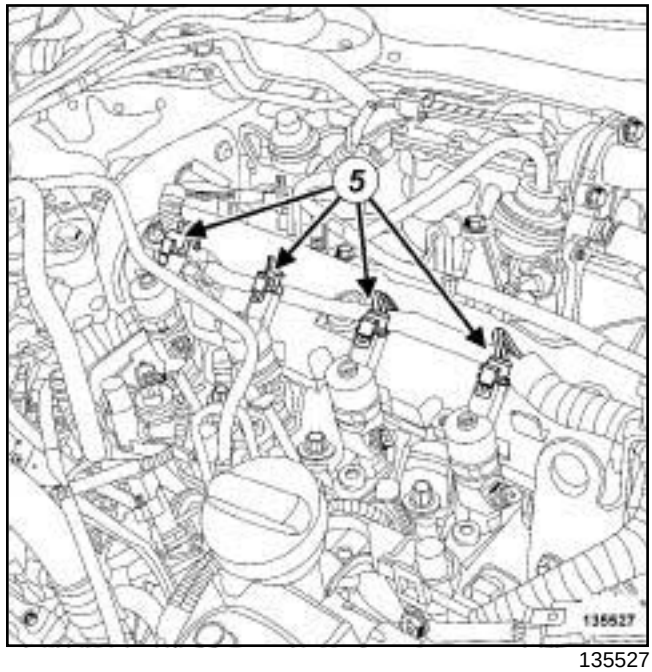

135527

❑ Disconnect the injector connector (**5**) .

F9Q

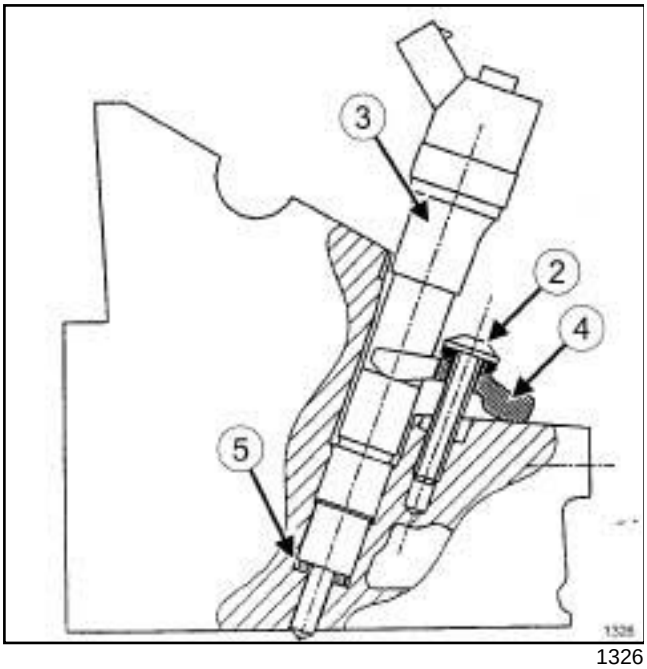

1326

❑ Remove:

- the injector clamp bolt (**2**) ,
- the injector (**3**) and its clamp (**4**) ,
- the heat protection washer (**5**) .

❑ Fit an appropriate blanking plug on the diesel injector nose.

> Note:
>
> If reusing the diesel injector(s) keep them in a hermetically sealed bag throughout the removal operation.

> Note:
>
> If the compression washer is stuck at the bottom of the well, use the tool **(Mot. 1817)** (see **Injector well cleaning tool: Use**) (Technical Note 6040, 13B, Diesel injection).

REFITTING

I - REFITTING PREPARATION OPERATION

❑ **parts always to be replaced: injector seal (11,11, 02,02)**.

❑ Always clean the well of the removed injector (see **Injector well cleaning tool: Use**) (Technical Note 6040, 13B, Diesel injection).

> **WARNING**
>
> It is strictly forbidden to clean the injectors with:
>
> - a wire brush,
> - an emery cloth,
> - an ultrasonic cleaner.

❑ If reusing the removed injector:

- clean the injector using a wipe soaked in injector cleaning product or brake cleaner,
- if necessary, leave the injector nozzle to soak in injector cleaner,
- wipe the injector with a new wipe,
- (see **Vehicle: Parts and ingredients for the repairwork**) (04B, Consumables - Products) and (see **13B**, **Diesel injection**, **Diesel injection: Precautions for repair**, page **13B-1**) .

II - REFITTING OPERATION FOR PART CONCERNED

❑

> **WARNING**
>
> Do not remove the blanking plugs from each component until the last moment.
>
> Also, do not remove the components from their packaging until they are to be fitted to the vehicle.

❑ Refit:

- a new compression washer,
- the diesel injector with its bracket.

❑ Torque tighten the **diesel injector bracket bolt (25 N.m)**.

❑ Connect the injector connector.

III - FINAL OPERATION

❑ Refit:

- the high pressure pipes between the rail and the injector (see **13B**, **Diesel injection**, **High-pressure pipe between the rail and injector: Removal - Refitting**, page **13B-87**) ,

- the diesel injector fuel return rail (see **13B**, **Diesel injection**, **Diesel injector fuel return rail: Removal - Refitting**, page **13B-63**) ,
- the injector rail protector (see **13B**, **Diesel injection**, **Injector rail protector: Removal - Refitting**, page **13B-70**) ,
- the engine cover.

❏ Connect the battery (see **Battery : Removal - Refitting**) (80A, Battery).

❏ Apply the after repair procedure using the **diagnostic tool** :

- connect the diagnostic tool,
- select « Injection computer » ,
- go to repair mode,
- display the « before/after repair procedure » for the computer selected,
- select « Injector » in the « List of components stored by this computer » section,
- carry out the operations described in the « After repair procedure » section.

❏ Check that there are no fuel leaks.

K9K, and 834

Essential equipment
compressed air nozzle
diagnostic tool

Tightening torques ▽	
bolt of the diesel injector bracket	**27 N.m**

IMPORTANT
To avoid all risk of damage to the systems, apply the safety and cleanliness instructions and operation recommendations before carrying out any repair (see **13B**, **Diesel injection**, **Diesel injection: Precautions for repair**, page **13B-1**) .

IMPORTANT
Wear leaktight gloves (Nitrile type) for this operation.

WARNING
To avoid any corrosion or damage, protect the areas on which fuel is likely to run.

REMOVAL

I - REMOVAL PREPARATION OPERATION

❑ Remove the front engine cover.

❑ Disconnect the battery (see **Battery: Removal - Refitting**) (80A, Battery).

❑ Remove the high pressure pipe(s) between the injector rail and the diesel injector(s) (see **13B**, **Diesel injection**, **High-pressure pipe between the rail and injector: Removal - Refitting**, page **13B-87**) .

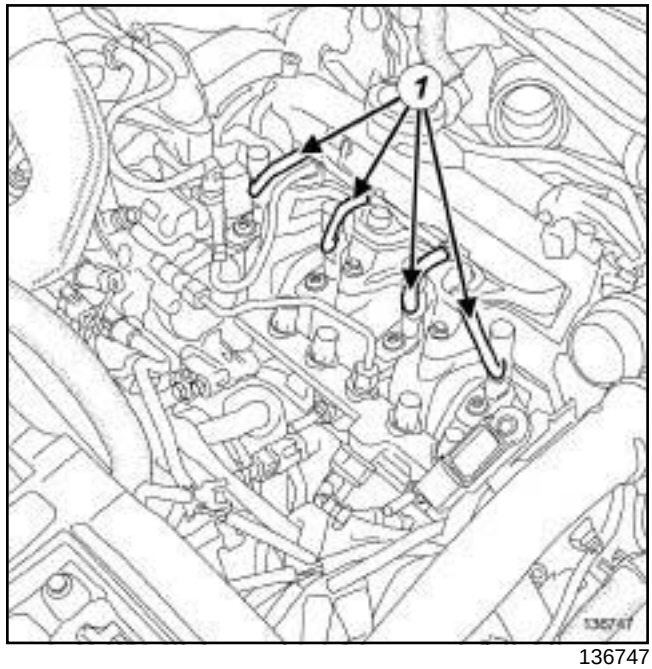

136747

❑ Clean the unions of the diesel injector return rail on the diesel injectors (see **13B**, **Diesel injection**, **Diesel injection: Precautions for repair**, page **13B-1**) .

❑ Disconnect the diesel injector fuel return rail from the diesel injector(s) at (**1**) .

II - OPERATION FOR REMOVAL OF PART CONCERNED

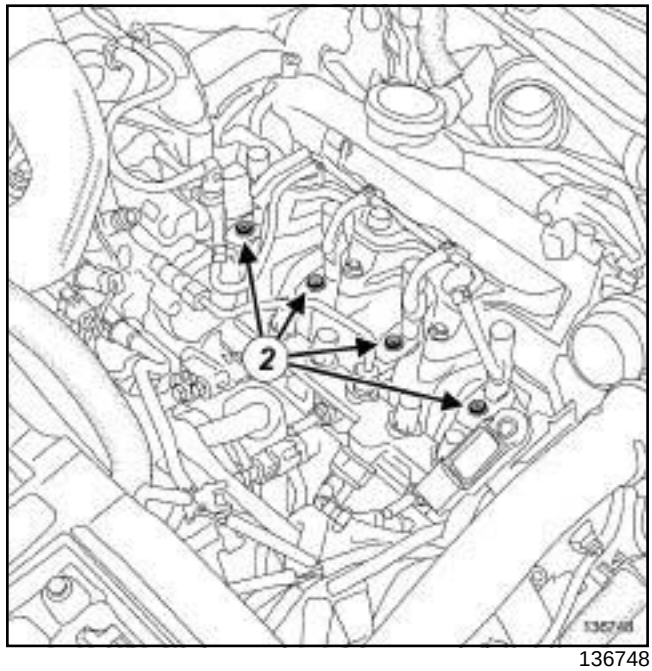

136748

❑ Remove:

- the bolt (**2**) from the bracket on the diesel injector(s) concerned,

K9K, and 834

- the diesel injector bracket.

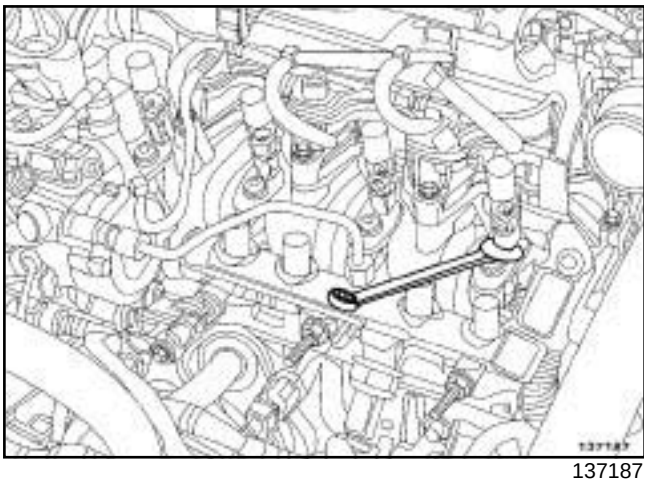

137187

❑

> Note:
>
> If the diesel injector is stuck in the well and does not come out, turn the diesel injector using an open-ended spanner on the flat surface of the diesel injector bracket.

❑ Remove:

- the diesel injector(s) concerned,
- the seal at the bottom of the well of the diesel injector(s) concerned or on the nozzle of the diesel injector(s) concerned.

> Note:
>
> If reusing the diesel injector(s), keep them in a hermetically sealed bag throughout the removal operation.

❑ Fit an appropriate blanking plug on the diesel injector nose.

REFITTING

I - REFITTING PREPARATION OPERATION

❑

> **WARNING**
>
> Do not remove the blanking plugs from each component until the last moment.
>
> Also, do not remove the components from their packaging until they are to be fitted to the vehicle.

❑ **parts always to be replaced: injector seal (11,11, 02,02)**.

Cleaning the diesel injector well(s) and the diesel injector(s)

❑

> **WARNING**
>
> It is strictly forbidden to clean the injectors with:
>
> - a wire brush,
> - an emery cloth,
> - an ultrasonic cleaner.

❑ Soak the diesel injector in **INJECTOR CLEANING PRODUCT** (see **Vehicle: Parts and ingredients for the repairwork**) (04B, Consumables - Products).

❑ Clean the nozzle of the diesel injector(s):

- either using **CLEANING CLOTHS** soaked in **INJECTOR CLEANING PRODUCT** (see **Vehicle: Parts and ingredients for the repairwork**) (04B, Consumables - Products),
- or using a small brush with plastic bristles.

❑ Wipe using **CLEANING CLOTHS**.

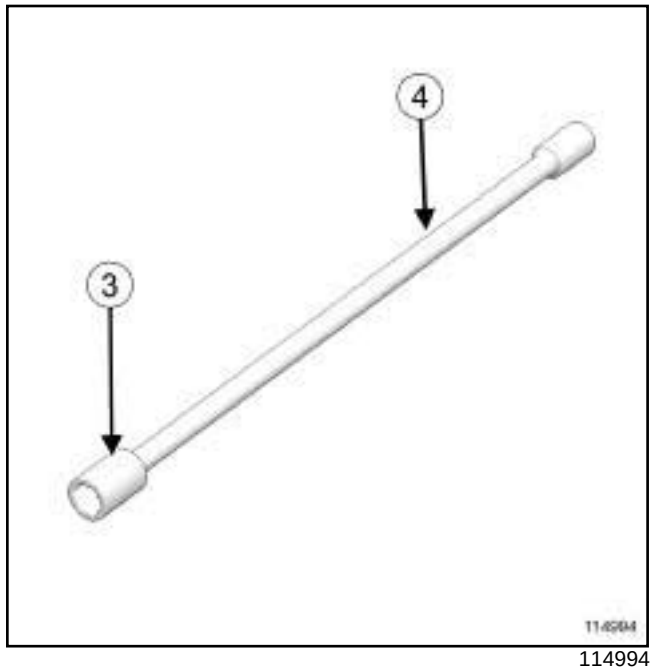

114994

❑ Fit an **11mm** by **1/4"** socket (**3**) (socket outer Ø = washer Ø) on an extension piece (**4**) .

❑ Wrap a **CLEANING CLOTH** on the "socket - extension piece" assembly.

❑ Soak a **CLEANING CLOTH** in **INJECTOR CLEANING PRODUCT** (see **Vehicle: Parts and ingredients for the repairwork**) (04B, Consumables - Products).

K9K, and 834

- ❑ Insert the wipe-covered extension piece and end piece down into the bottom of the well.
- ❑ Clean the injector well (pay particular attention to the mating face of the washer).

> Note:
>
> Swivel the cloth covered socket and extension piece around inside the well.

- ❑ Remove the **CLEANING CLOTH** from the well.

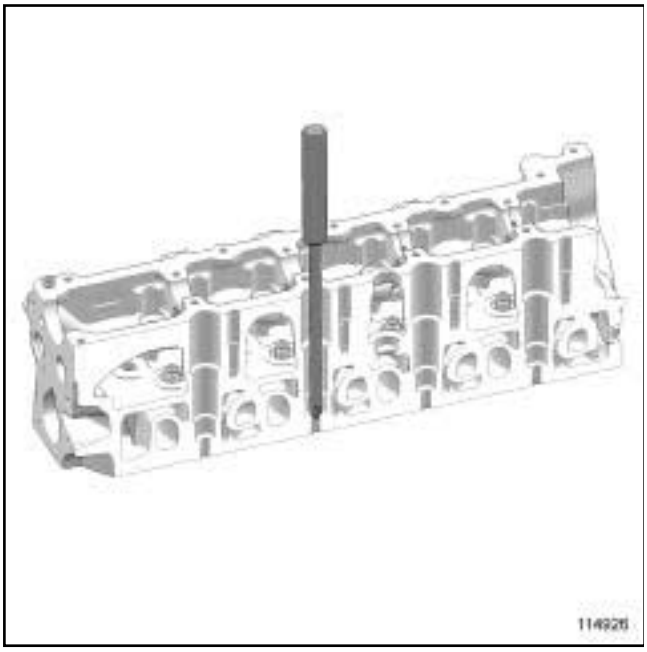

114926

- ❑ Insert a large diameter Phillips screwdriver (Ø > **8 mm**) into the well to block the opening to the combustion chamber.
- ❑ Blast out any scale residue in the well using a **compressed air nozzle**.
- ❑ Remove the screwdriver and repeat the cleaning operation for the injector well concerned twice in succession.

II - REFITTING OPERATION FOR PART CONCERNED

- ❑ Remove the blanking plug from the nozzle of the diesel injector(s).
- ❑ Refit:
  - a seal on the new diesel injector(s),
  - the diesel injector(s),
  - the diesel injector bracket.
- ❑ Torque tighten the **bolt of the diesel injector bracket (27 N.m)**.

III - FINAL OPERATION

- ❑ Connect the diesel injector fuel return rail to the diesel injector(s).
- ❑ Refit the high pressure pipe(s) between the injector rail and the diesel injector(s) (see **13B**, **Diesel injection**, **High-pressure pipe between the rail and injector: Removal - Refitting**, page **13B-87**) .
- ❑ Connect the battery (see **Battery : Removal - Refitting**) (80A, Battery).
- ❑ Check that there are no diesel leaks.
- ❑ Refit the engine cover.
- ❑ Apply the after repair procedure using the **diagnostic tool** :
  - connect the **diagnostic tool**,
  - select "Injection computer",
  - go to repair mode,
  - display the "Before/after repair procedure" for the computer selected,
  - select "Injector" in the "List of components stored by this computer" section,
  - carry out the operations described in the "After repair procedure" section.

Accelerometer: Removal - Refitting

K9K, and 830 or 834

Essential special tooling	
Emb. 1797	24 mm socket for removing and refitting clutch master cylinder

Essential equipment
diagnostic tool

Tightening torques ▽	
accelerometer	**20 N.m**

REMOVAL

I - REMOVAL PREPARATION OPERATION

❑ Remove the front engine cover.

❑ Disconnect the battery (see **Battery: Removal - Refitting**) (80A, Battery).

II - OPERATION FOR REMOVAL OF PART CONCERNED

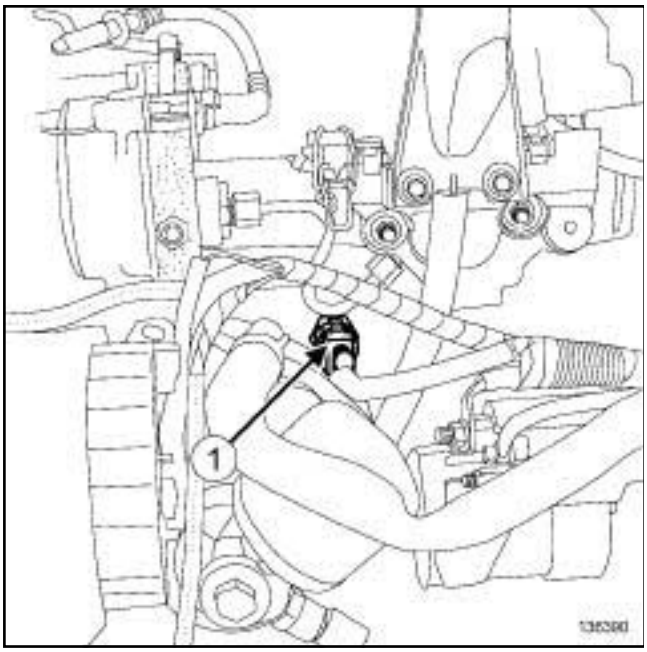

136390

❑

> Note:
>
> Make sure that the metal tabs on the accelerometer connector are unlocked correctly to prevent breaking the connector.

❑ Disconnect the accelerometer connector (**1**) .

❑ Remove the accelerometer using **(Emb. 1797)**.

REFITTING

I - REFITTING OPERATION FOR PART CONCERNED

❑ Refit the accelerometer.

❑ Torque tighten the **accelerometer (20 N.m)** using the **(Emb. 1797)**.

❑ Connect the accelerometer connector.

II - FINAL OPERATION

❑ Connect the battery (see **Battery : Removal - Refitting**) (80A, Battery).

❑ Connect the **diagnostic tool**.

❑ Run command RZ004 Pressure regulation adaptive.

❑ Start the engine and leave it running for a few minutes whilst depressing the accelerator slightly a few times.

❑ Switch off the engine.

❑ Using **diagnostic tool**, check that there are no stored faults; deal with them if necessary.

❑ Refit the engine cover.

❑ Apply the after repair procedure using the **diagnostic tool** :

- connect the **diagnostic tool**,
- select "Injection computer",
- go to repair mode,
- display the "After repair procedure" for the selected computer,
- select "Accelerometer" in the "List of components stored by this computer" section,
- carry out the operations described in the "After repair procedure" section.

F9Q or K9K

REMOVAL

I - OPERATION FOR REMOVAL OF PART CONCERNED

❑ Position the vehicle on a two-post lift (see **Vehicle: Towing and lifting**) (02A, Lifting equipment).

❑ Disconnect the battery (see **Battery: Removal - Refitting**) (80A, Battery).

❑ Remove:

- the front wheels (see **Wheel: Removal - Refitting**) (35A, Wheels and tyres),
- the front section of the front wheel arch liners (see **Front wheel arch liner: Removal - Refitting**) (55A, Exterior protection),
- the front bumper (see **Front bumper: Removal - Refitting**) (55A, Exterior protection),
- the air resonator (see **12A**, **Fuel mixture**, **Air resonator: Removal - Refitting**, page **12A-1**) .

F9Q or K9K, and 830

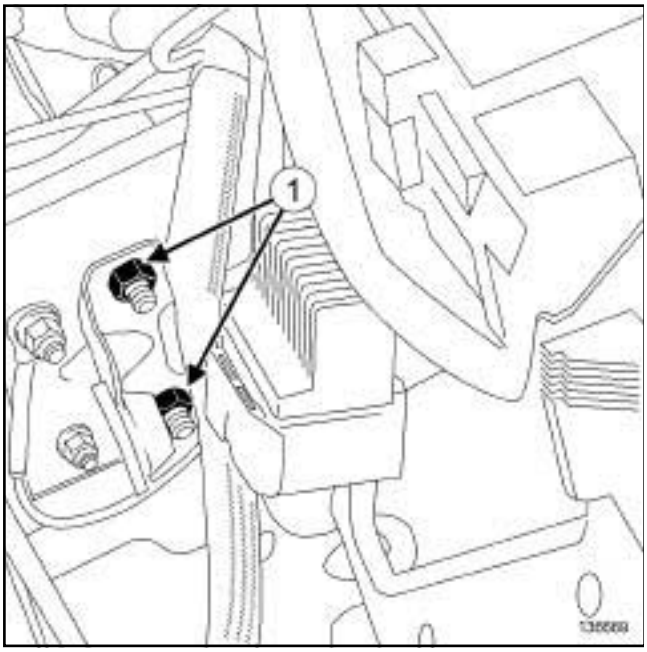

136669

❑ Remove the air resonator support nuts (**1**) .

❑ Move aside the air resonator support.

II - OPERATION FOR REMOVAL OF PART CONCERNED

K9K

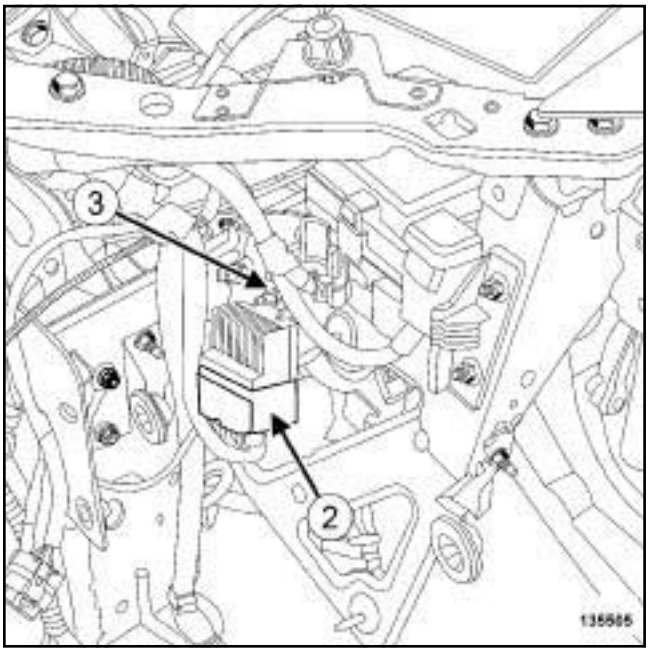

135505

❑ Disconnect the pre-postheating unit connector (**2**) .

❑ Remove:

- the pre-postheating unit nut (**3**) ,
- the pre/postheating unit.

F9Q or K9K

F9Q

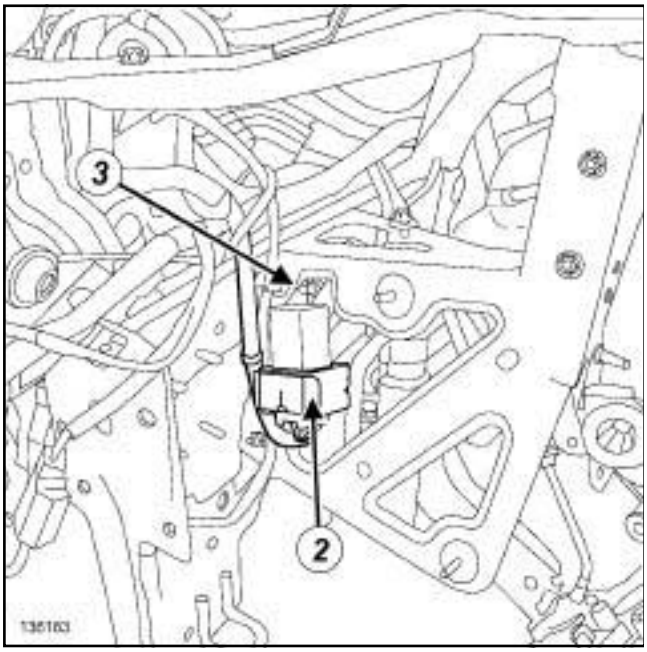

136183

❑ Disconnect the pre-postheating unit connector (**2**) .

❑ Remove:

- the pre-postheating unit nut (**3**) ,
- the pre/postheating unit.

REFITTING

I - REFITTING OPERATION FOR PART CONCERNED

❑ Refit the pre-postheating unit.

❑ Connect the pre-postheating unit connector.

II - FINAL OPERATION

K9K, and 830

❑ Fit the air resonator support.

❑ Refit the nuts of the air resonator support.

❑ Refit:

- the air resonator (see **12A**, **Fuel mixture**, **Air resonator: Removal - Refitting**, page **12A-1**) ,
- the front bumper (see **Front bumper: Removal - Refitting**) (55A, Exterior protection),
- the front section of the front wheel arch liners (see **Front wheel arch liner: Removal - Refitting**) (55A, Exterior protection),
- the front wheels (see **Wheel: Removal - Refitting**) (35A, Wheels and tyres).

❑ Connect the battery (see **Battery : Removal - Refitting**) (80A, Battery).

F9Q

Essential equipment
tool for removing heater plugs
hinged wrench for heater plug

Tightening torques ▽	
heater plugs	**15 N.m**

REMOVAL

I - REMOVAL PREPARATION OPERATION

❑ Disconnect the battery (see **Battery: Removal - Refitting**) (80A, Battery).

❑ Remove:

- the engine cover,
- the injector rail protector (see **13B**, **Diesel injection**, **Injector rail protector: Removal - Refitting**, page **13B-70**) .

II - OPERATION FOR REMOVAL OF PART CONCERNED

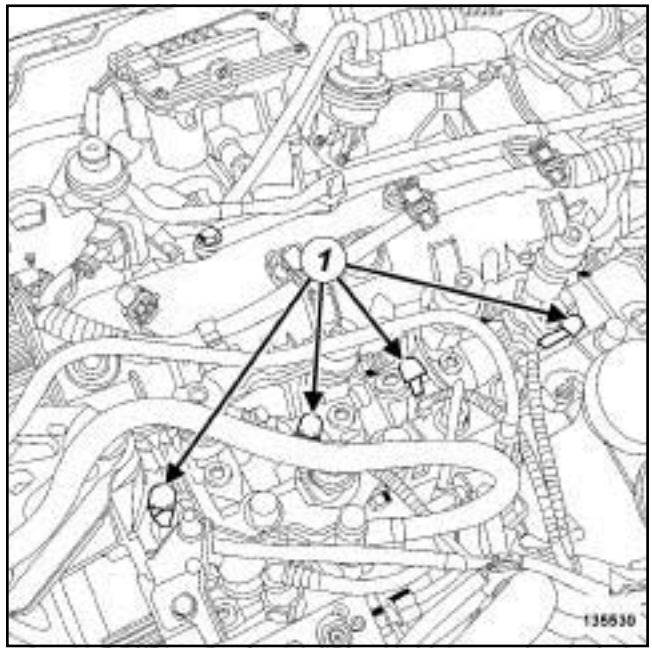

135530

❑ Disconnect the heater plug connectors (**1**) .

> **IMPORTANT**
> Wear goggles with side protectors for this operation.

❑ Clean around the outside of the heater plugs with a compressed air gun to prevent any impurities from entering the cylinders.

> Note:
> If the heater plugs are seized, use the **tool for removing heater plugs** (see **Heater plug removal tool: Use**) (Technical Note 5197A, 06A, Tooling).

❑ Unscrew the heater plugs using a **10 mm** long socket connected to a universal joint or a **hinged wrench for heater plug**.

REMOVAL

I - REFITTING PREPARATION OPERATION

❑

> **WARNING**
> Ensure that no dirt enters the cylinder during this operation.

F9Q

II - REFITTING OPERATION FOR PART CONCERNED

❏ Refit the heater plugs

❏ Tighten to torque the **heater plugs (15 N.m)** using a **10 mm** long socket.

❏ Connect the heater plug connectors.

III - FINAL OPERATION

❏ Refit:

- the injector rail protector (see **13B**, **Diesel injection**, **Injector rail protector: Removal - Refitting**, page **13B-70**) ,
- the engine cover.

❏ Connect the battery (see **Battery : Removal - Refitting**) (80A, Battery).

K9K, and 832

Essential equipment
compressed air nozzle
tool for removing heater plugs
hinged wrench for heater plug

Tightening torques ▽	
heater plugs	**15 N.m**
intercooler air outlet pipe clip on the damper valve	**5.5 N.m**

REMOVAL

I - REMOVAL PREPARATION OPERATION

❑ Remove:

- the engine cover,
- the turbocharger air outlet pipe (see **12B**, **Turbocharging**, **Intercooler air inlet pipe: Removal - Refitting**, page **12B-41**) .

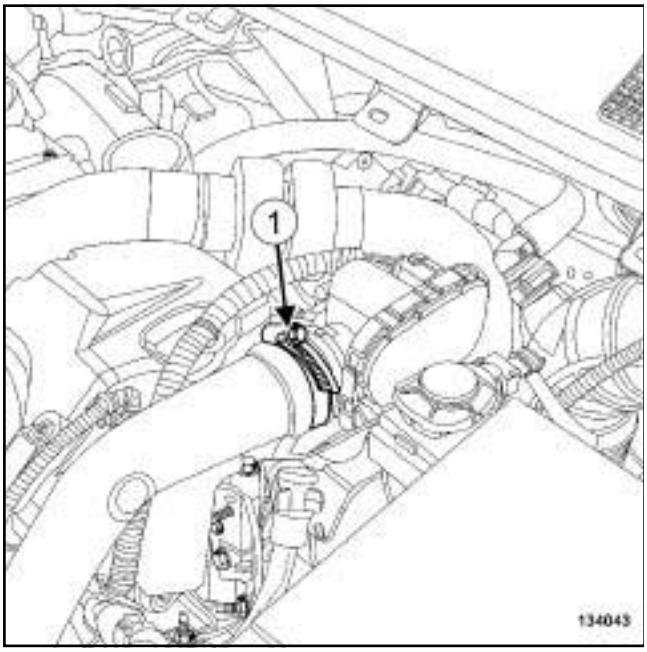

134043

❑ Loosen the clip (**1**) of the intercooler air outlet pipe from the damper valve.

❑ Disconnect the intercooler outlet air pipe from the damper valve.

❑ Move the intercooler outlet air pipe slightly away from the damper valve.

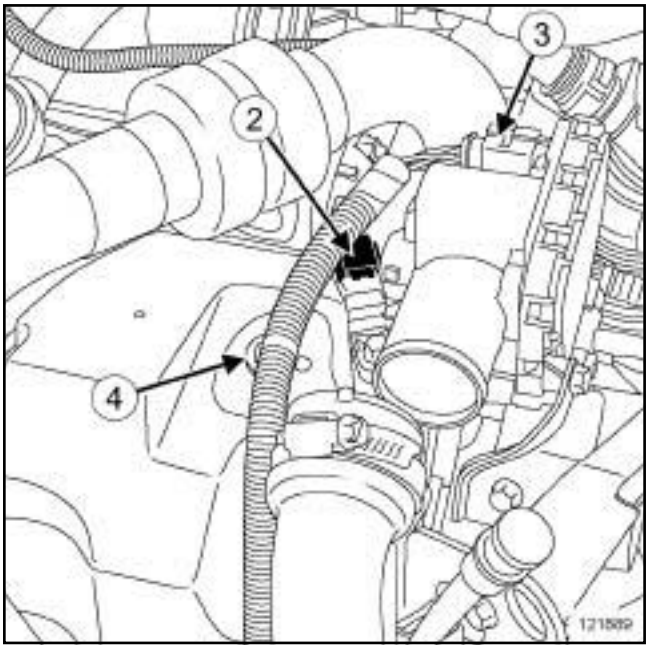

121889

❑ Disconnect:

- the connector (**2**) from the camshaft position sensor,
- the damper valve connector (**3**) .

❑ Unclip the camshaft position sensor wiring and the damper valve wiring (**4**) from the injector rail protector cover.

❑ Move aside the camshaft position sensor wiring and damper valve wiring.

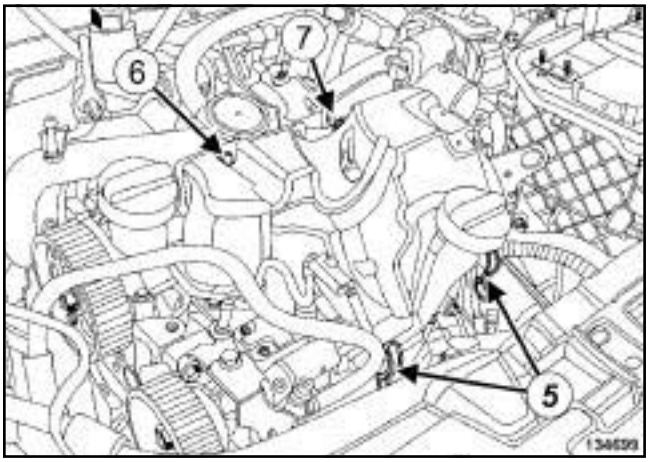

134699

❑ Unclip the injector rail protector cover at (**5**) .

❑ Remove:

- the injector rail protector cover bolt (**6**) ,
- the injector rail protector cover nut (**7**) ,
- the injector rail protector cover,

K9K, and 832

II - OPERATION FOR REMOVAL OF PART CONCERNED

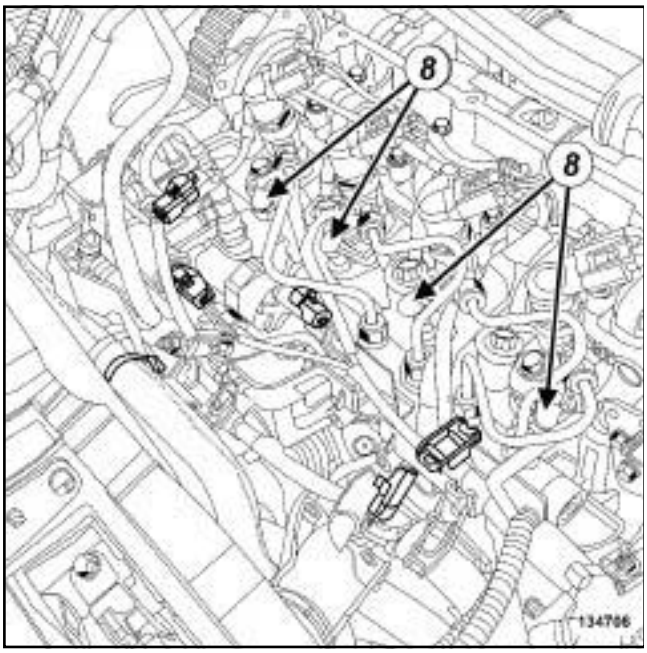

134706

❑ Disconnect the connector (**8**) from each heater plug.

> **IMPORTANT**
> Wear goggles with side protectors for this operation.

❑ Clean around the outside of the heater plugs with a **compressed air nozzle** to prevent any impurities from entering the cylinders.

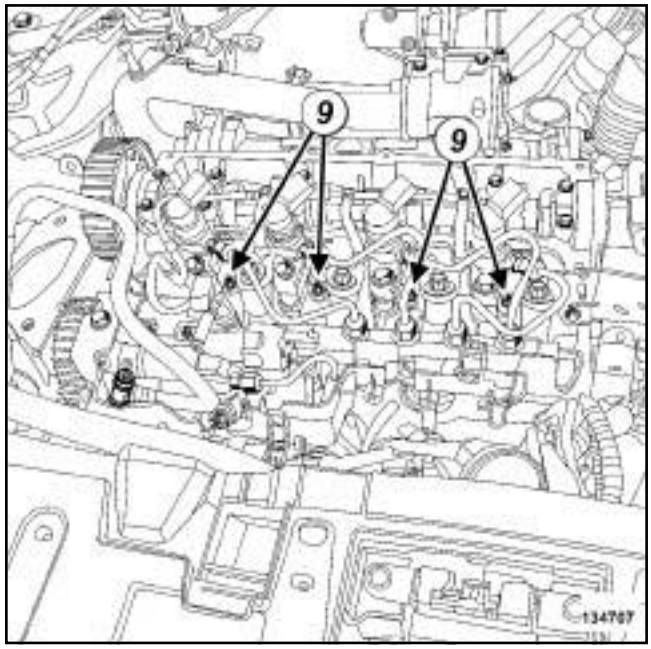

134707

❑

> Note:
> If the heater plugs are seized, use the **tool for removing heater plugs** (see **Heater plug removal tool: Use**) (Technical Note 5197A, 06A, Tooling).

❑ Unscrew the heater plugs (**9**) using a **10 mm** long radio socket connected to a universal joint or a **hinged wrench for heater plug**.

❑ Use a hose to unscrew the heater plugs completely (**9**) .

❑ Remove the heater plugs.

REFITTING

I - REFITTING OPERATION FOR PART CONCERNED

❑ Without tightening, fit the heater plugs using the hose.

❑ Torque tighten the **heater plugs (15 N.m)**.

❑ Connect the connector for each heater plug.

II - FINAL OPERATION

❑ Refit the injector rail protector cover.

❑ Clip:

- the injector rail protector cover,

K9K, and 832

- the wiring of the camshaft position sensor and damper valve onto the injector rail protector cover.

❏ Connect:

- the damper valve connector,
- the camshaft position sensor connector.

❏ Fit the intercooler air outlet pipe.

❏ Connect the intercooler air outlet pipe on the damper valve.

❏ Torque tighten the **intercooler air outlet pipe clip on the damper valve (5.5 N.m)**.

❏ Refit:

- the turbocharger air outlet pipe (see **12B**, **Turbo-charging**, **Intercooler air inlet pipe: Removal - Refitting**, page **12B-41**) ,
- the engine cover.

K9K, and 830

Essential equipment
compressed air nozzle
tool for removing heater plugs
hinged wrench for heater plug

Tightening torques ▽	
heater plugs	**15 N.m**

REMOVAL

I - REMOVAL PREPARATION OPERATION

❑ Remove:

- the engine cover,
- the turbocharger air outlet pipe (see **12B**, **Turbocharging**, **Intercooler air inlet pipe: Removal - Refitting**, page **12B-41**) .

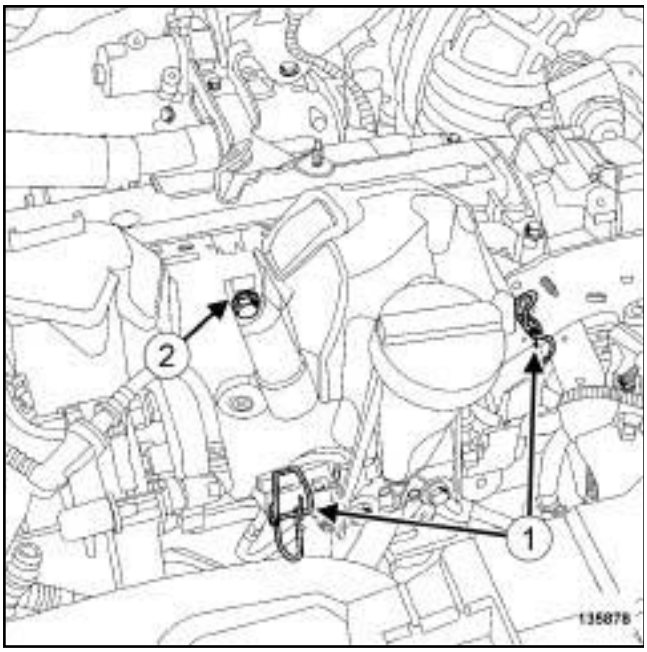

135878

❑ Unclip the injector rail protector cover at (**1**) .

❑ Remove:

- the injector rail protector cover bolt (**2**) ,
- the injector rail protector cover,

II - OPERATION FOR REMOVAL OF PART CONCERNED

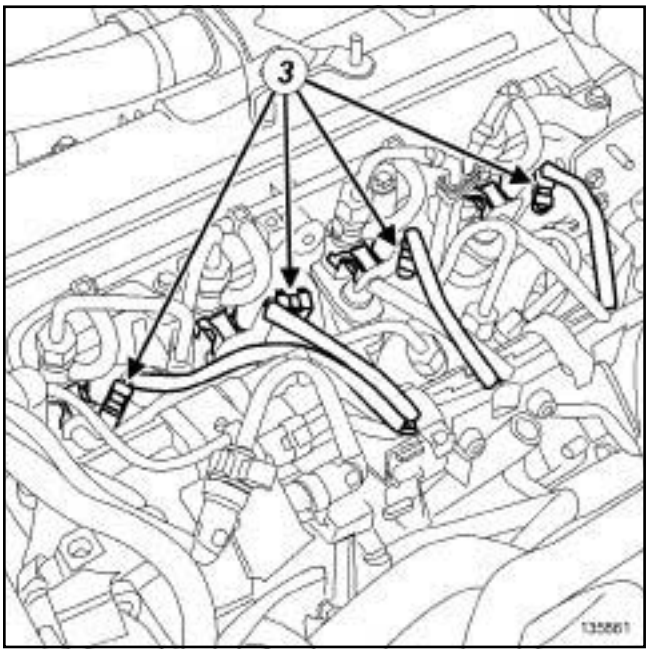

135861

❑ Disconnect the connector (**3**) from each heater plug.

IMPORTANT
Wear goggles with side protectors for this operation.

❑ Clean around the outside of the heater plugs with a **compressed air nozzle** to prevent any impurities from entering the cylinders.

K9K, and 830

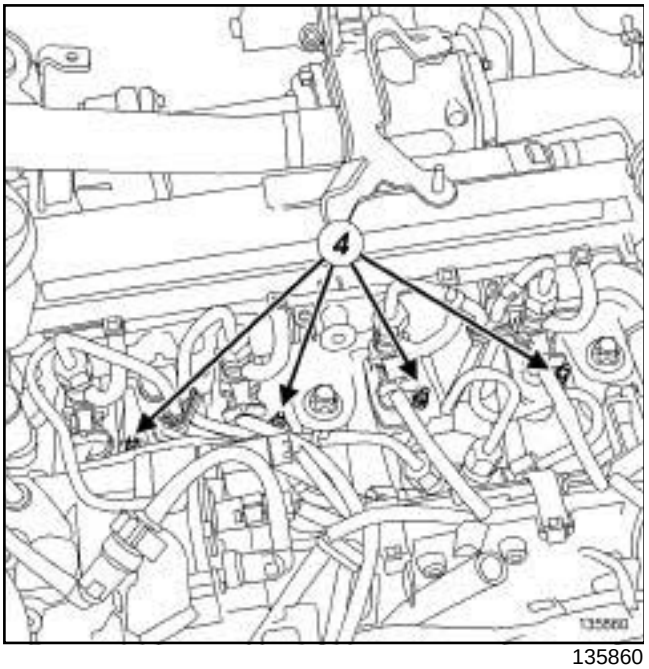

135860

❑

> Note:
>
> If the heater plugs are seized, use the **tool for removing heater plugs** (see **Heater plug removal tool: Use**) (Technical Note 5197A, 06A, Tooling).

❑ Unscrew the heater plugs (**4**) using a **10 mm** long radio socket connected to a universal joint or a **hinged wrench for heater plug**.

❑ Use a hose to unscrew the heater plugs completely (**4**) .

❑ Remove the heater plugs.

REFITTING

I - REFITTING OPERATION FOR PART CONCERNED

❑ Without tightening, fit the heater plugs using the hose.

❑ Torque tighten the **heater plugs (15 N.m)**.

❑ Connect the connector for each heater plug.

II - FINAL OPERATION

❑ Refit the injector rail protector cover.

❑ Clip on the injector rail protector cover.

❑ Refit:

- the turbocharger air outlet pipe (see **12B**, **Turbocharging**, **Intercooler air inlet pipe: Removal - Refitting**, page **12B-41**) ,
- the engine cover.

F4R or K4M

IMPORTANT

During this operation, be sure to:

- refrain from smoking or bringing red hot objects close to the working area,
- be careful of fuel splashes when disconnecting the union.

IMPORTANT

Wear leaktight gloves (Nitrile type) for this operation.

IMPORTANT

Wear goggles with side protectors for this operation.

WARNING

To avoid any corrosion or damage, protect the areas on which fuel is likely to run.

WARNING

Keep the pipe unions away from contaminated areas.

WARNING

To prevent impurities from entering the circuit, place protective plugs on all fuel circuit components exposed to the open air.

REMOVAL

I - REMOVAL PREPARATION OPERATION

❑ Position the vehicle on a two-post lift (see **Vehicle: Towing and lifting**) (02A, Lifting equipment).

II - OPERATION FOR REMOVAL OF PART CONCERNED

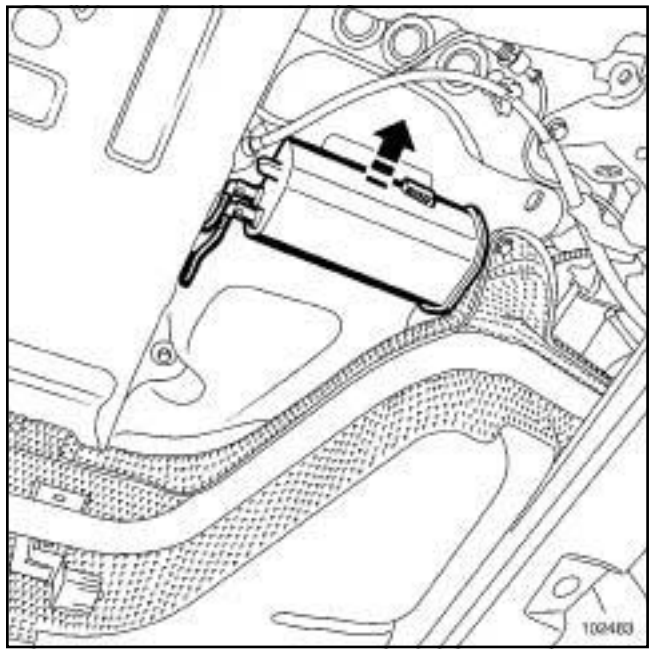

102483

❑ Remove the fuel vapour absorber by pulling it downwards then towards the vehicle exterior.

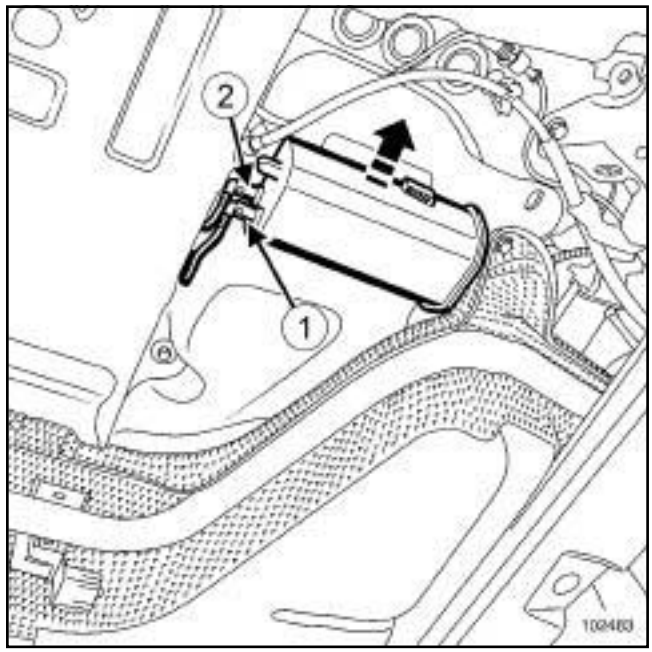

102483

❑ Disconnect the fuel vapour absorber pipes (**1**) and (**2**) .

❑ Insert the blanking plugs.

❑ Remove the fuel vapour absorber.

F4R or K4M

REFITTING

I - REFITTING PREPARATION OPERATION

❏ Remove the blanking plugs.

II - REFITTING OPERATION FOR PART CONCERNED

❏ Connect the fuel vapour absorber pipes.

❏ Refit the fuel vapour absorber on the tank.

K9K

Essential equipment
diagnostic tool

Tightening torques ▽	
exhaust gas recirculation solenoid valve bolts	**10 N.m**

IMPORTANT
Wear protective gloves during the operation.

REMOVAL

I - REMOVAL PREPARATION OPERATION

❑ Remove the front engine cover.

K9K, and 832

❑ Disconnect the oil vapour rebreathing pipe from the rocker cover.

II - OPERATION FOR REMOVAL OF PART CONCERNED

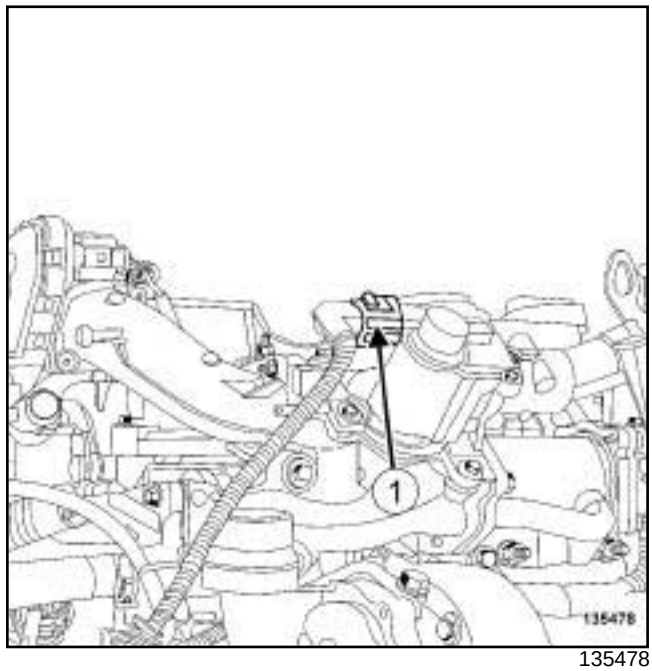

135478

❑ Disconnect the connector (**1**) from the exhaust gas recirculation solenoid valve.

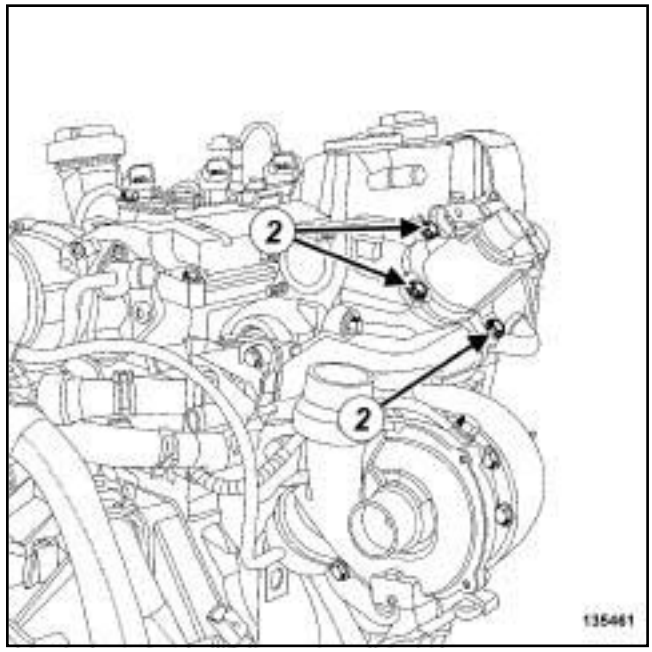

135461

❑ Remove:

- the bolts (**2**) from the exhaust gas recirculation solenoid valve,
- the exhaust gas recirculation solenoid valve,
- the exhaust gas recirculation solenoid valve seal.

K9K

REFITTING

I - REFITTING PREPARATION OPERATION

- **parts always to be replaced: exhaust gas recirculation solenoid valve seal (11,07,01,13)**.
- Use a **SURFACE CLEANER** (see **Vehicle: Parts and ingredients for the repairwork**) (04B, Consumables - Products) to clean and degrease the sealing surfaces:
  - of the exhaust gas recirculation solenoid valve if it is being reused,
  - of the exhaust gas recirculation mounting on the gearbox side.

II - REFITTING OPERATION FOR PART CONCERNED

- Refit:
  - a new seal on the exhaust gas recirculation solenoid valve,
  - the exhaust gas recirculation solenoid valve.
- Torque tighten the **exhaust gas recirculation solenoid valve bolts (10 N.m)**.
- Connect the exhaust gas recirculation solenoid valve connector.

III - FINAL OPERATION

K9K, and 832

- Connect the oil vapour rebreathing pipe onto the rocker cover.

- Refit the engine cover.
- Apply the after repair procedure using the **diagnostic tool** :
  - connect the **diagnostic tool**,
  - select "Injection computer",
  - go to repair mode,
  - display the "Before/after repair procedure" for the computer selected,
  - select "Exhaust gas recirculation solenoid valve" in the "List of components controlled by this computer" section,
  - carry out the operations described in the "After repair procedure" section.

F9Q

Tightening torques ▽	
exhaust gas recirculation solenoid valve bolts	**10 N.m**

REMOVAL

I - REMOVAL PREPARATION OPERATION

❏ Position the vehicle on a two-post lift (see **Vehicle: Towing and lifting**) (02A, Lifting equipment).

❏ Remove:

- the engine cover,
- the engine undertray bolts,
- the engine undertray,
- the windscreen wiper arms (see **Windscreen wiper arm: Removal - Refitting**) (85A, Wiping - Washing),
- the scuttle panel grille (see **Scuttle panel grille: Removal - Refitting**) (56A, Exterior equipment),
- the scoop under the scuttle panel grille (see **Scoop under scuttle panel grille: Removal - Refitting**) (56A, Exterior equipment),
- the battery (see **Battery: Removal - Refitting**) (80A, Battery),
- the battery tray (see **Battery tray: Removal - Refitting**) (80A, Battery),
- the intercooler air inlet pipe (see **12B**, **Turbocharging**, **Intercooler air inlet pipe: Removal - Refitting**, page **12B-41**) ,
- the exhaust gas recirculation rigid pipes (see **14A**, **Antipollution**, **Exhaust gas recirculation rigid pipe: Removal - Refitting**, page **14A-30**) ,
- the exhaust gas recirculation assembly (see **14A**, **Antipollution**, **Exhaust gas recirculation assembly: Removal - Refitting**, page **14A-18**) .

II - OPERATION FOR REMOVAL OF PART CONCERNED

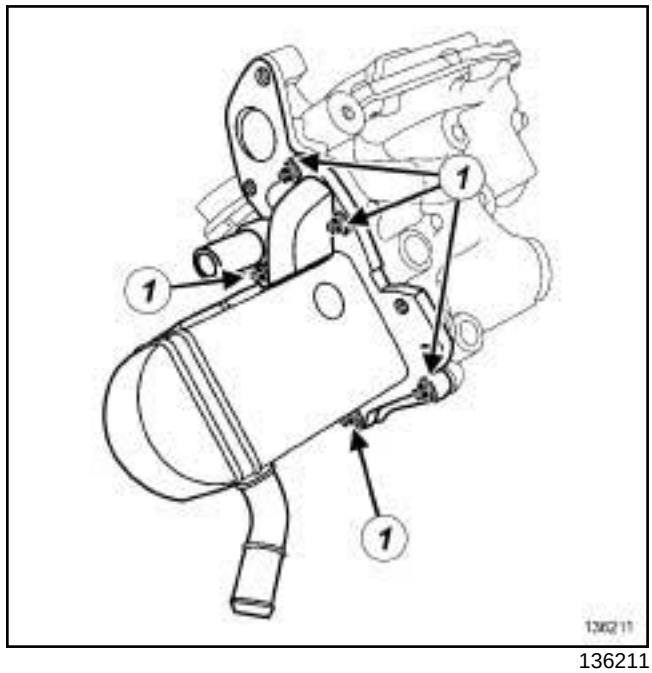

136211

❏ Remove:

- the bolts (**1**) from the exhaust gas recirculation solenoid valve,
- the exhaust gas recirculation solenoid valve,
- the exhaust gas recirculation solenoid valve seal.

REFITTING

I - REFITTING PREPARATION OPERATION

❏ **parts always to be replaced: exhaust gas recirculation solenoid valve seal (11,07,01,13)**.

❏ Use **SURFACE CLEANER** (see **Vehicle: Parts and ingredients for the repairwork**) (04B, Consumables - Products) to clean and degrease the joint face of:

- the exhaust gas cooler,
- the exhaust gas recirculation solenoid valve.

II - REFITTING OPERATION FOR PART CONCERNED

❏ Refit:

- a new seal on the exhaust gas recirculation solenoid valve,
- the exhaust gas recirculation solenoid valve.

❏ Torque tighten the **exhaust gas recirculation solenoid valve bolts (10 N.m)**.

F9Q

III - FINAL OPERATION

❑ Refit:

- the exhaust gas recirculation assembly (see **14A**, **Antipollution**, **Exhaust gas recirculation assembly: Removal - Refitting**, page **14A-18**) ,
- the exhaust gas recirculation rigid pipes (see **14A**, **Antipollution**, **Exhaust gas recirculation rigid pipe: Removal - Refitting**, page **14A-30**) ,
- the intercooler air inlet pipe (see **12B**, **Turbocharging**, **Intercooler air inlet pipe: Removal - Refitting**, page **12B-41**) ,
- the battery tray (see **Battery tray: Removal - Refitting**) (80A, Battery),
- the battery (see **Battery : Removal - Refitting**) (80A, Battery),
- the scoop under the scuttle panel grille (see **Scoop under scuttle panel grille: Removal - Refitting**) (56A, Exterior equipment),
- the scuttle panel grille (see **Scuttle panel grille: Removal - Refitting**) (56A, Exterior equipment),
- the windscreen wiper arms (see **Windscreen wiper arm: Removal - Refitting**) (85A, Wiping - Washing),
- the engine undertray,
- the engine cover.

❑ Apply the after repair procedure using the diagnostic tool:

- connect the diagnostic tool,
- select « Injection computer » ,
- go to repair mode,
- display the « before/after repair procedure » for the computer selected,
- select « Exhaust gas recirculation solenoid valve » in the « List of components controlled by this computer » section,
- carry out the operations described in the « After repair procedure » section.

K9K

Essential special tooling	
Mot. 1448	Long nose pliers for hose clips.
Ms. 583	Hose clamp pliers.

Tightening torques ▽	
exhaust gas cooler bolts on the exhaust gas recirculation mounting	**12 N.m**
bolts of the exhaust gas recirculation rigid pipe on the exhaust gas recirculation assembly	**12 N.m**
exhaust gas cooler bolts on the exhaust gas recirculation mounting	**12 N.m**
bolts of the exhaust gas recirculation assembly mounting	**12 N.m**
bolts of the exhaust gas recirculation assembly on the cylinder head	**25 N.m**
bolts of the exhaust gas recirculation rigid pipe bracket on the cylinder head	**25 N.m**
bolts of the exhaust gas recirculation rigid pipe on the exhaust manifold	**36 N.m**
air filter unit air outlet pipe clip on the turbo-charger	**5.5 N.m**
clip of the air filter unit air outlet pipe on the air filter unit	**5.5 N.m**

REMOVAL

I - REMOVAL PREPARATION OPERATION

❑ Position the vehicle on a two-post lift (see **Vehicle: Towing and lifting**) (02A, Lifting equipment).

❑ Disconnect the battery (see **Battery: Removal - Refitting**) (80A, Battery).

J95

❑ Remove:

- the windscreen wiper arms (see **Windscreen wiper arm: Removal - Refitting**) ,
- the scuttle panel grille (see **Scuttle panel grille: Removal - Refitting**) ,
- the brake fluid reservoir from the scoop under the scuttle panel grille,
- the scoop under the scuttle panel grille (see **Scoop under scuttle panel grille: Removal - Refitting**) .

❑ Remove:

- the engine cover,
- the engine undertray bolts,
- the engine undertray,
- the catalytic converter (see **19B**, **Exhaust**, **Catalytic converter: Removal - Refitting**, page **19B-17**) ,
- the turbocharger air outlet pipe (see **12B**, **Turbocharging**, **Intercooler air inlet pipe: Removal - Refitting**, page **12B-41**) .

K9K, and 832

❑ Remove the damper valve (see **12A**, **Fuel mixture**, **Air inlet flap: Removal - Refitting**, page **12A-11**) .

❑ Remove:

- the exhaust gas recirculation rigid pipe (see **14A**, **Antipollution**, **Exhaust gas recirculation rigid pipe: Removal - Refitting**, page **14A-30**) ,
- the exhaust gas recirculation assembly (see **14A**, **Antipollution**, **Exhaust gas recirculation assembly: Removal - Refitting**, page **14A-18**) .

K9K

II - OPERATION FOR REMOVAL OF PART CONCERNED

K9K, and 832

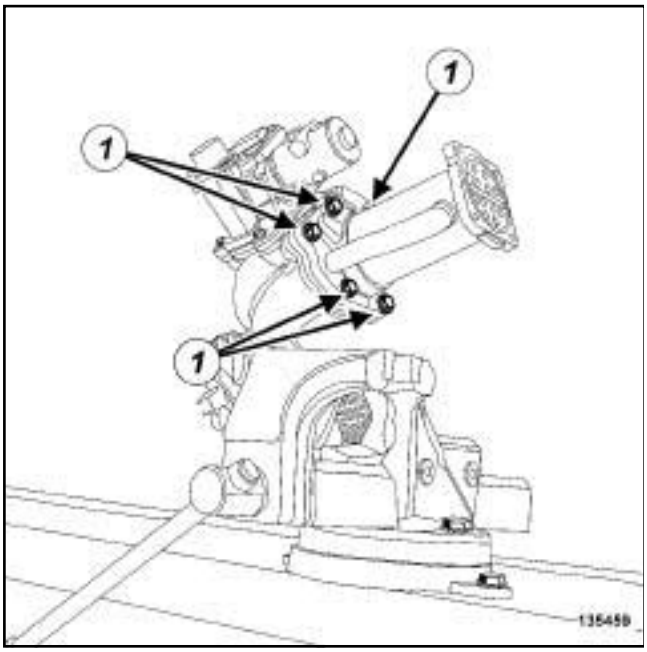

135459

❑ Remove the following on the workbench:

- the bolts (**1**) from the exhaust gas cooler,
- the exhaust gas cooler,
- the exhaust gas cooler seal.

K9K, and 830

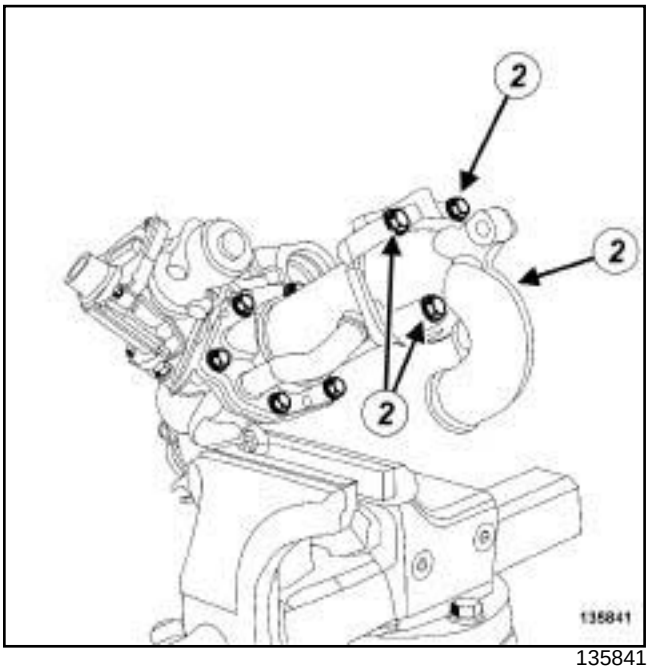

135841

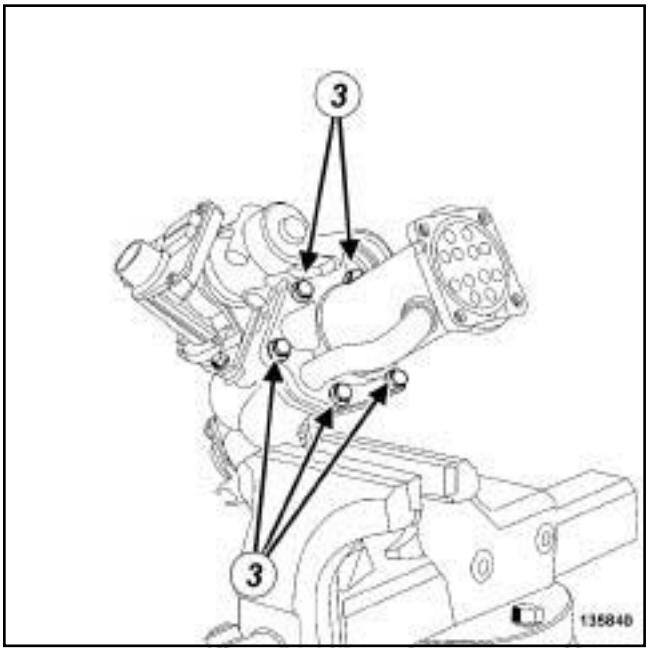

135840

❑ Remove:

- the bolts (**2**) from the exhaust gas recirculation assembly mounting on the timing end,
- the exhaust gas recirculation assembly mounting on the timing end,
- the exhaust gas recirculation assembly mounting seal on the timing end,
- the bolts (**3**) from the exhaust gas cooler,

K9K

- the exhaust gas cooler,
- the exhaust gas cooler seal.

REFITTING

I - REFITTING PREPARATION OPERATION

❑ **parts always to be replaced: exhaust gas cooler seal (11,07,01,17)**.

K9K, and 832

❑ **parts always to be replaced: Exhaust gas recirculation rigid pipe (11,07,01,08)**.

❑ **parts always to be replaced: Exhaust gas recirculation pipe seal (11,07,01,15)**.

❑ Use **ABRASIVE PADS** to clean the joint faces:

- of the exhaust gas cooler if it is being reused,
- of the exhaust gas recirculation mounting on the gearbox side.

Note:

Take care not to damage the joint faces of the exhaust gas cooler on its mounting to prevent any coolant leaks.

K9K, and 830

❑ Use **ABRASIVE PADS** to clean the joint faces of the exhaust gas recirculation mounting on the timing end.

❑ Use **SURFACE CLEANER** (see **Vehicle: Parts and ingredients for the repairwork**) (04B, Consumables - Products) and **CLEAN CLOTHS** to degrease the joint faces:

- of the exhaust gas cooler if it is being reused,
- of the exhaust gas recirculation mounting on the gearbox side.

WARNING

To ensure proper sealing, the gasket surfaces must be clean, dry and not greasy (avoid any finger marks).

K9K, and 830

❑ Use **SURFACE CLEANER** (see **Vehicle: Parts and ingredients for the repairwork**) (04B, Ingredient - Products) and **CLEAN CLOTHS** to degrease the joint faces of the exhaust gas recirculation mounting on the timing end.

K9K

II - REFITTING OPERATION FOR PART CONCERNED

K9K, and 832

❏ On the workbench, refit:

- the exhaust gas cooler with a new seal on the exhaust gas recirculation mounting on the gearbox side,
- fit without tightening the exhaust gas cooler bolts on the exhaust gas recirculation mounting on the gearbox side,
- the new exhaust gas recirculation rigid pipe on the exhaust gas recirculation assembly,
- fit without tightening the bolts of the exhaust gas recirculation rigid pipe on the exhaust gas recirculation assembly.

Note:

The exhaust gas cooler must be able to move in relation to the exhaust gas recirculation mounting and the exhaust gas recirculation rigid pipe so that it can be adjusted correctly.

❏ Fit the exhaust gas recirculation assembly equipped with the exhaust gas recirculation rigid pipe on the cylinder head.

❏ Tighten:

- the bolts of the exhaust gas recirculation assembly on the cylinder head,
- the bolts of the exhaust gas recirculation rigid pipe bracket on the cylinder head,
- the bolts of the exhaust gas cooler on the exhaust gas recirculation mounting,
- the bolts of the exhaust gas recirculation rigid pipe on the exhaust gas recirculation assembly,

❏ Remove:

- the exhaust gas recirculation assembly bolts,
- the bolts of the exhaust gas recirculation rigid pipe bracket,
- the exhaust gas recirculation assembly fitted with the exhaust gas recirculation rigid pipe.

❏ On the workbench, torque tighten:

- the **exhaust gas cooler bolts on the exhaust gas recirculation mounting (12 N.m)**,
- the **bolts of the exhaust gas recirculation rigid pipe on the exhaust gas recirculation assembly (12 N.m)**.

K9K, and 830

❏ On the workbench, refit:

- the exhaust gas cooler with a new seal on the exhaust gas recirculation mounting on the gearbox side,
- fit without tightening the exhaust gas cooler bolts of the exhaust gas recirculation mounting on the gearbox side,
- the timing end exhaust gas recirculation assembly mounting on the exhaust gas recirculation assembly,
- fit without tightening the bolts of the timing end exhaust gas recirculation assembly mounting on the exhaust gas recirculation assembly.

Note:

The exhaust gas cooler must be able to move in relation to the exhaust gas recirculation mounting and the exhaust gas recirculation rigid pipe so that it can be adjusted correctly.

❏ Fit the exhaust gas recirculation assembly on the cylinder head equipped with the exhaust gas recirculation assembly mounting.

❏ Tighten:

- the bolts of the exhaust gas recirculation assembly on the cylinder head,
- the bolts of the exhaust gas recirculation assembly mounting on the cylinder head,
- the bolts of the exhaust gas cooler on the exhaust gas recirculation mounting,
- the bolts of the exhaust gas recirculation assembly mounting on the exhaust gas recirculation assembly,

❏ Remove:

- the bolts of the exhaust gas recirculation assembly on the cylinder head,
- the bolts of the exhaust gas recirculation assembly mounting.

❏ On the workbench, torque tighten:

- the **exhaust gas cooler bolts on the exhaust gas recirculation mounting (12 N.m)**,

K9K

- the **bolts of the exhaust gas recirculation assembly mounting (12 N.m)**.

III - FINAL OPERATION

K9K, and 830

❑ Refit the exhaust gas recirculation assembly (see **14A**, **Antipollution**, **Exhaust gas recirculation assembly: Removal - Refitting**, page **14A-18**) .

K9K, and 832

❑ Refit the exhaust gas recirculation assembly equipped with the exhaust gas recirculation rigid pipe on the cylinder head.

❑ Fit without tightening:

- the bolts of the exhaust gas recirculation assembly on the cylinder head,
- the bolts of the exhaust gas recirculation rigid pipe bracket on the cylinder head,
- the exhaust gas recirculation rigid pipe bolts on the exhaust manifold.

❑ Tighten to torque:

- the **bolts of the exhaust gas recirculation assembly on the cylinder head (25 N.m)**,
- the **bolts of the exhaust gas recirculation rigid pipe bracket on the cylinder head (25 N.m)**,
- the **bolts of the exhaust gas recirculation rigid pipe on the exhaust manifold (36 N.m)**.

❑ Connect the cooling hoses of the exhaust gas cooler cover.

❑ Fit the clip on each cooling hose of the exhaust gas cooler cover using the tool **(Mot. 1448)**.

❑ Remove the tool **(Ms. 583)** on each cooling hose of the exhaust gas cooler cover.

❑ Clip the hose of the turbocharging pressure regulation solenoid valve onto the exhaust gas cooler cover.

❑ Refit the air outlet pipe onto the air filter unit.

❑ Connect the air filter unit air outlet pipe to the turbocharger.

❑ Torque tighten the **air filter unit air outlet pipe clip on the turbocharger (5.5 N.m)**.

❑ Connect the air filter unit air outlet pipe to the air filter unit.

❑ Torque tighten the **clip of the air filter unit air outlet pipe on the air filter unit (5.5 N.m)**.

❑ Clip the air flowmeter wiring onto the air filter unit air outlet pipe.

K9K

K9K, and 830

❑ Refit the rigid exhaust gas recirculation pipe (see **14A**, **Antipollution**, **Exhaust gas recirculation rigid pipe: Removal - Refitting**, page **14A-30**) .

K9K, and 832

❑ Refit:

- the air inlet metal tube fitted with new seals,
- the lifting eye on the timing end.

❑ Connect the exhaust gas recirculation solenoid valve connector.

❑ Refit:

- the injector rail protector cover mounting,
- the injector rail protector cover.

❑ Clip the injector rail protector cover into place.

❑ Refit the damper valve (see **12A**, **Fuel mixture**, **Air inlet flap: Removal - Refitting**, page **12A-11**) .

❑ Refit:

- the turbocharger air outlet pipe (see **12B**, **Turbocharging**, **Intercooler air inlet pipe: Removal - Refitting**, page **12B-41**) ,
- the oil vapour rebreathing pipe .

K9K, and 832

❑ Connect the oil vapour rebreathing pipe:

- on the rocker cover,
- on the air filter box air outlet pipe.

❑ Refit:

- the catalytic converter (see **19B**, **Exhaust**, **Catalytic converter: Removal - Refitting**, page **19B-17**) ,
- the engine undertray,
- the engine cover.

J95

❑ Refit:

- the scoop under the scuttle panel grille (see **Scoop under scuttle panel grille: Removal - Refitting**) .
- the brake fluid reservoir of the scoop under the scuttle panel grille,
- the scuttle panel grille (see **Scuttle panel grille: Removal - Refitting**) ,
- the windscreen wiper arms (see **Windscreen wiper arm: Removal - Refitting**) .

❑ Connect the battery (see **Battery : Removal - Refitting**) (80A, Battery).

❑ Fill and bleed the cooling system (see **19A**, **Cooling**, **Cooling circuit: Draining - Refilling**, page **19A-17**) .

F9Q

Tightening torques ▽	
exhaust gas cooler bolts	**10 N.m**

REMOVAL

I - REMOVAL PREPARATION OPERATION

❑ Position the vehicle on a two-post lift (see **Vehicle: Towing and lifting**) (02A, Lifting equipment).

❑ Remove:

- the engine cover,
- the engine undertray bolts,
- the engine undertray,
- the windscreen wiper arms (see **Windscreen wiper arm: Removal - Refitting**) (85A, Wiping - Washing),
- the scuttle panel grille (see **Scuttle panel grille: Removal - Refitting**) (56A, Exterior equipment),
- the scoop under the scuttle panel grille (see **Scoop under scuttle panel grille: Removal - Refitting**) (56A, Exterior equipment),
- the battery (see **Battery: Removal - Refitting**) (80A, Battery),
- the battery tray (see **Battery tray: Removal - Refitting**) (80A, Battery),
- the intercooler air inlet pipe (see **12B**, **Turbocharging**, **Intercooler air inlet pipe: Removal - Refitting**, page **12B-41**) ,
- the exhaust gas recirculation rigid pipes (see **14A**, **Antipollution**, **Exhaust gas recirculation rigid pipe: Removal - Refitting**, page **14A-30**) ,
- the exhaust gas recirculation assembly (see **14A**, **Antipollution**, **Exhaust gas recirculation assembly: Removal - Refitting**, page **14A-18**) .

II - OPERATION FOR REMOVAL OF PART CONCERNED

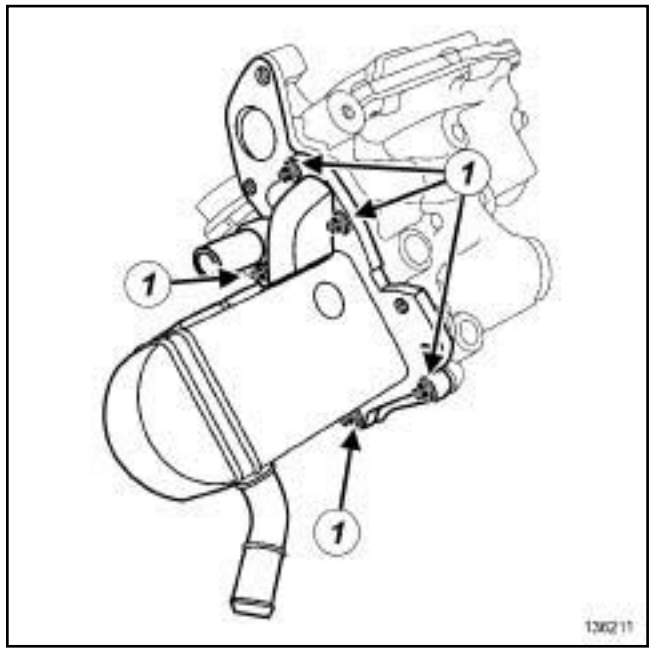

136211

❑ Remove:

- the bolts (**1**) from the exhaust gas cooler,
- the exhaust gas cooler,
- the exhaust gas cooler seal.

REFITTING

I - REFITTING PREPARATION OPERATION

❑ **parts always to be replaced: exhaust gas cooler seal (11,07,01,17)**.

❑ Use **SURFACE CLEANER** (see **Vehicle: Parts and ingredients for the repairwork**) (04B, Consumables - Products) to clean and degrease the joint faces:

- the exhaust gas cooler,
- the exhaust gas recirculation solenoid valve.

II - REFITTING OPERATION FOR PART CONCERNED

❑ Refit:

- a new exhaust gas cooler seal,
- the exhaust gas intercooler.

❑ Torque tighten the **exhaust gas cooler bolts (10 N.m)**.

F9Q

III - FINAL OPERATION

❑ Refit:

- the exhaust gas recirculation assembly (see **14A**, **Antipollution**, **Exhaust gas recirculation assembly: Removal - Refitting**, page **14A-18**) ,
- the exhaust gas recirculation rigid pipes (see **14A**, **Antipollution**, **Exhaust gas recirculation rigid pipe: Removal - Refitting**, page **14A-30**) ,
- the intercooler air inlet pipe (see **12B**, **Turbocharging**, **Intercooler air inlet pipe: Removal - Refitting**, page **12B-41**) ,
- the battery tray (see **Battery tray: Removal - Refitting**) (80A, Battery),
- the battery (see **Battery : Removal - Refitting**) (80A, Battery),
- the scoop under the scuttle panel grille (see **Scoop under scuttle panel grille: Removal - Refitting**) (56A, Exterior equipment),
- the scuttle panel grille (see **Scuttle panel grille: Removal - Refitting**) (56A, Exterior equipment),
- the windscreen wiper arms (see **Windscreen wiper arm: Removal - Refitting**) (85A, Wiping - Washing),
- the engine undertray,
- the engine cover.

K9K, and 836

Tightening torques ▽	
exhaust gas cooler bolts on the exhaust gas recirculation mounting	**12 N.m**
bolts of the exhaust gas recirculation assembly mounting	**12 N.m**

REMOVAL

I - REMOVAL PREPARATION OPERATION

❑ Position the vehicle on a two-post lift (see **Vehicle: Towing and lifting**) (02A, Lifting equipment).

❑ Disconnect the battery (see **Battery: Removal - Refitting**) (80A, Battery).

❑ Remove:

- the engine cover,
- the engine undertray bolts,
- the engine undertray,
- the exhaust gas recirculation rigid pipe (see **14A**, **Antipollution**, **Exhaust gas recirculation rigid pipe: Removal - Refitting**, page **14A-30**) ,
- the exhaust gas recirculation assembly (see **14A**, **Antipollution**, **Exhaust gas recirculation assembly: Removal - Refitting**, page **14A-18**) .

II - OPERATION FOR REMOVAL OF PART CONCERNED

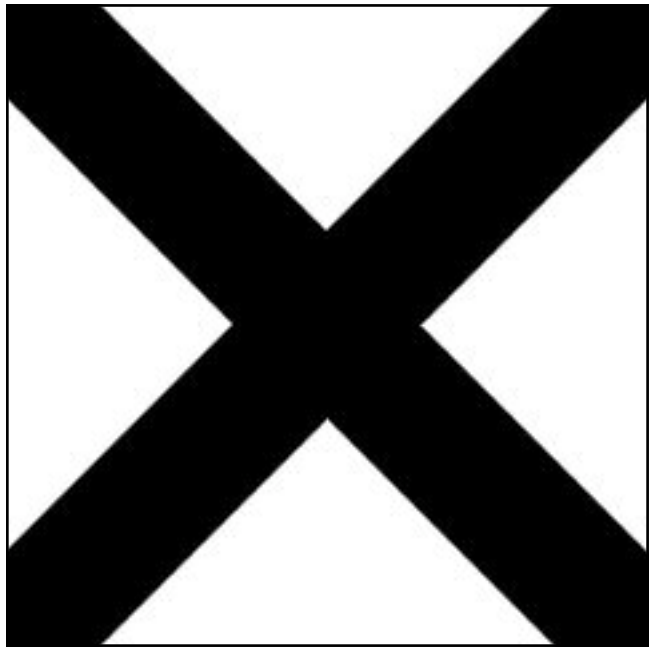

100000-1

❑ Remove:

- the exhaust gas pressure sensor clip,
- the exhaust gas pressure sensor.

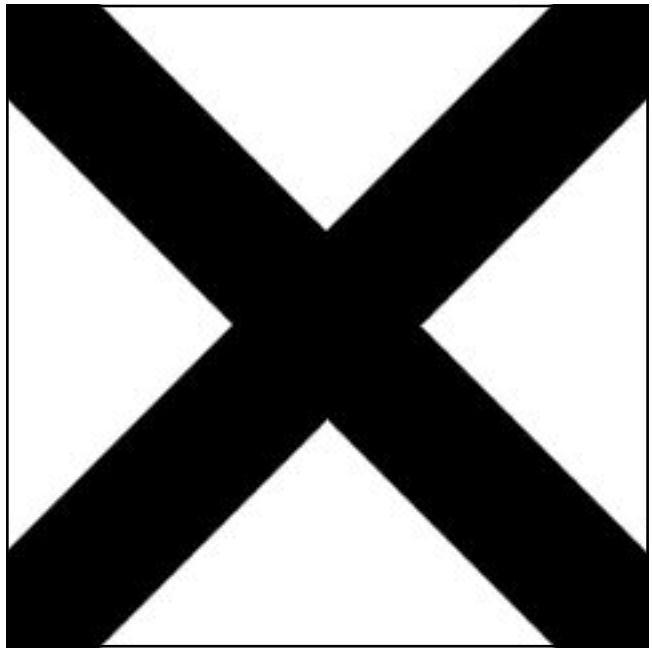

100000-1

❑ Remove the coolant hose clip between the exhaust gas cooler and the exhaust gas recirculation solenoid valve.

❑ Disconnect the coolant hose at the exhaust gas cooler end.

K9K, and 836

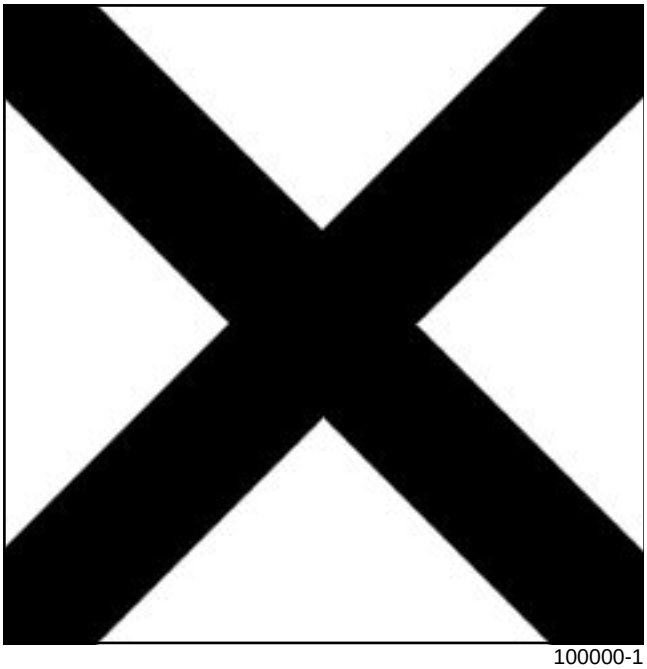

100000-1

❑ Remove:

- the bolts from the exhaust gas recirculation assembly support,
- the exhaust gas recirculation assembly.

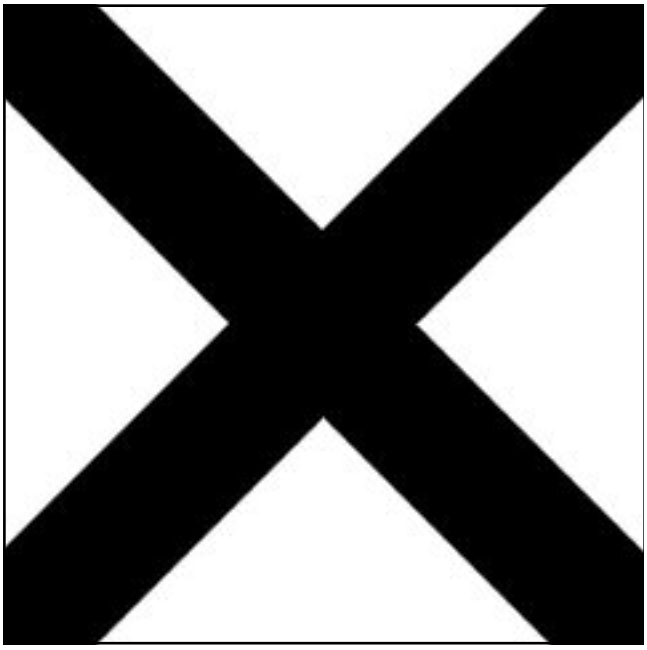

100000-1

❑ Remove:

- the exhaust gas cooler bolts,
- the exhaust gas cooler.

REFITTING

I - REFITTING PREPARATION OPERATION

❑ **parts always to be replaced: exhaust gas cooler seal (11,07,01,17)**

❑ Use **ABRASIVE PADS** to clean the joint faces:

- of the exhaust gas cooler if it is being reused,
- of the exhaust gas recirculation mounting on the gearbox side.

> Note:
>
> Take care not to damage the joint faces of the exhaust gas cooler on its mounting to prevent any coolant leaks.

❑ Use **ABRASIVE PADS** to clean the joint faces of the exhaust gas recirculation mounting on the timing end.

❑ Use **SURFACE CLEANER** (see **Vehicle: Parts and consumables for repair**) (04B, Consumables - Products) and **CLEAN CLOTHS** to degrease the joint faces:

- of the exhaust gas cooler if it is being reused,
- of the exhaust gas recirculation mounting on the gearbox side.

> **WARNING**
>
> To ensure proper sealing, the gasket surfaces must be clean, dry and not greasy (avoid any finger marks).

❑ Use **SURFACE CLEANER** (see **Vehicle: Parts and consumables for repair**) (04B, Ingredient - Products) and **CLEAN CLOTHS** to degrease the joint faces of the exhaust gas recirculation support on the timing end.

II - REFITTING OPERATION FOR PART CONCERNED

❑ On the workbench, refit the exhaust gas cooler with a new seal on the exhaust gas recirculation support on the gearbox side.

❑ Fit without tightening the exhaust gas cooler bolts on the exhaust gas recirculation support on the gearbox side.

❑ On the workbench, refit the timing end exhaust gas recirculation assembly support on the exhaust gas recirculation assembly.

K9K, and 836

- ❑ Fit without tightening the bolts of the timing end exhaust gas recirculation assembly support on the exhaust gas recirculation assembly.
- ❑ Connect the coolant hose to the exhaust gas cooler.
- ❑ Refit:
  - the new coolant hose clip between the exhaust gas cooler and the exhaust gas recirculation solenoid valve,
  - the exhaust gas pressure sensor,
  - the exhaust gas pressure sensor clip.

> Note:
>
> The exhaust gas cooler must remain mobile in relation to the exhaust gas recirculation support so that it can be adjusted correctly.

- ❑ Fit the exhaust gas recirculation assembly on the cylinder head equipped with the exhaust gas recirculation assembly mounting.
- ❑ Tighten:
  - the bolts of the exhaust gas recirculation assembly on the cylinder head,
  - the bolts of the exhaust gas recirculation assembly mounting on the cylinder head,
  - the bolts of the exhaust gas cooler on the exhaust gas recirculation support,
  - the bolts of the exhaust gas recirculation assembly support on the exhaust gas recirculation assembly.
- ❑ Remove:
  - the bolts of the exhaust gas recirculation assembly on the cylinder head,
  - the bolts of the exhaust gas recirculation assembly mounting.
- ❑ On the workbench, torque tighten the following:
  - the **exhaust gas cooler bolts on the exhaust gas recirculation mounting (12 N.m)**,
  - the **bolts of the exhaust gas recirculation assembly mounting (12 N.m)**.

III - FINAL OPERATION

- ❑ Refit:
  - the exhaust gas recirculation assembly (see **14A**, **Antipollution**, **Exhaust gas recirculation assembly: Removal - Refitting**, page **14A-18**) ,
  - the exhaust gas recirculation rigid pipe (see **14A**, **Antipollution**, **Exhaust gas recirculation rigid pipe: Removal - Refitting**, page **14A-30**) ,
  - the engine undertray,
  - the engine cover.
- ❑ Connect the battery (see **Battery: Removal - Refitting**) (80A, Battery).
- ❑ Fill and bleed the cooling system (see **19A**, **Cooling**, **Cooling circuit: Draining - Refilling**, page **19A-17**) .

K9K

Essential special tooling	
Ms. 583	Hose clamp pliers.
Mot. 1448	Long nose pliers for hose clips.

Tightening torques ▽	
bolts of the exhaust gas recirculation assembly on the cylinder head	**25 N.m**
bolts of the exhaust gas recirculation rigid pipe bracket on the cylinder head	**25 N.m**
bolts of the exhaust gas recirculation rigid pipe on the exhaust manifold	**36 N.m**
bolts of the exhaust gas recirculation rigid pipe on the exhaust gas recirculation assembly	**12 N.m**
bolts of the exhaust gas recirculation assembly	**25 N.m**
bolts of the exhaust gas recirculation assembly mounting	**25 N.m**
air filter unit air outlet pipe clip on the turbo-charger	**5.5 N.m**
clip of the air filter unit air outlet pipe on the air filter unit	**5.5 N.m**

IMPORTANT
Wear protective gloves during the operation.

REMOVAL

I - REMOVAL PREPARATION OPERATION

❑ Position the vehicle on a two-post lift (see **Vehicle: Towing and lifting**) (02A, Lifting equipment).

❑ Disconnect the battery (see **Battery: Removal - Refitting**) (80A, Battery).

❑ Remove:

- the engine cover,
- the engine undertray bolts,
- the engine undertray,
- the catalytic converter (see **19B**, **Exhaust**, **Catalytic converter: Removal - Refitting**, page **19B-17**) .

K9K, and 832

❑ Disconnect:

- the oil vapour rebreathing pipe union from the air filter unit air outlet pipe,
- the oil vapour rebreathing pipe from the rocker cover.

❑ Remove the oil vapour rebreathing pipe.

K9K

K9K, and 830

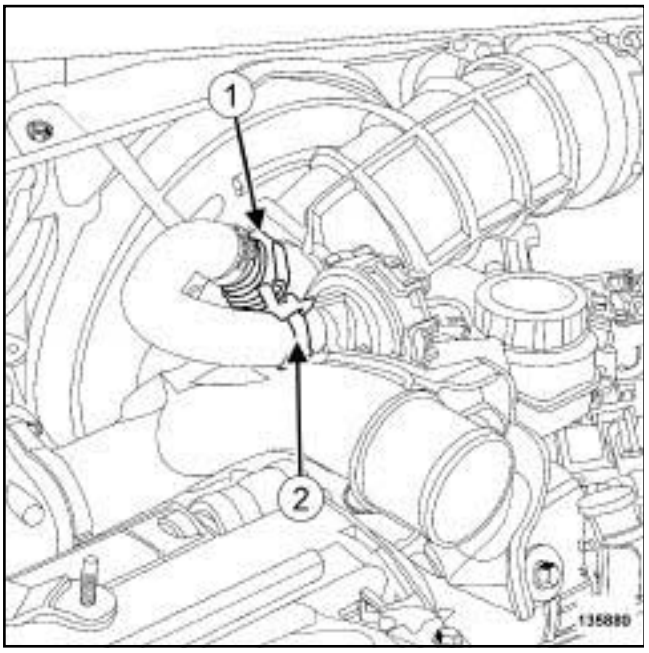

135880

- Disconnect the oil vapour rebreathing pipe union from the air filter unit air outlet pipe (**1**) .
- Separate the clip (**2**) of the oil vapour rebreathing pipe away on the oil vapour rebreathing valve.
- Disconnect the oil vapour rebreathing pipe from the oil vapour rebreathing valve.
- Remove the oil vapour rebreathing pipe.

- Remove the turbocharger outlet air pipe (see **12B**, **Turbocharging**, **Intercooler air inlet pipe: Removal - Refitting**, page **12B-41**) .

K9K, and 832

- Remove the damper valve (see **12A**, **Fuel mixture**, **Air inlet flap: Removal - Refitting**, page **12A-11**) .

K9K

K9K, and 830

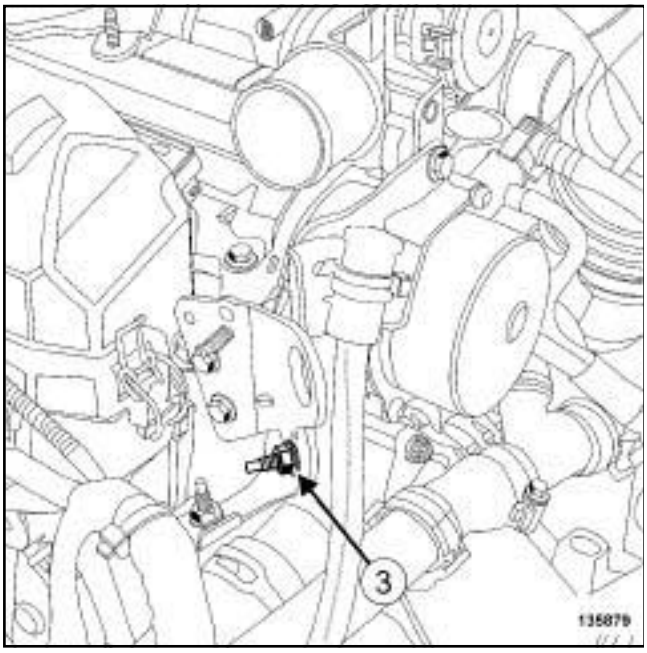

135879

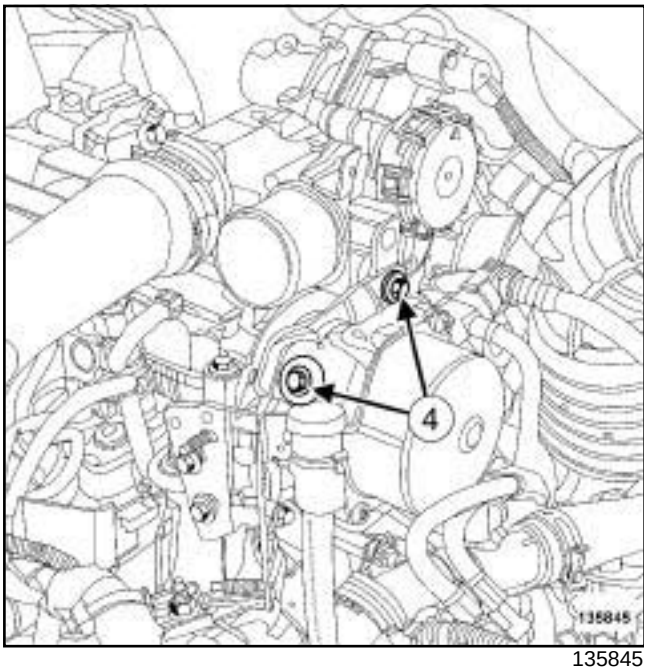

135845

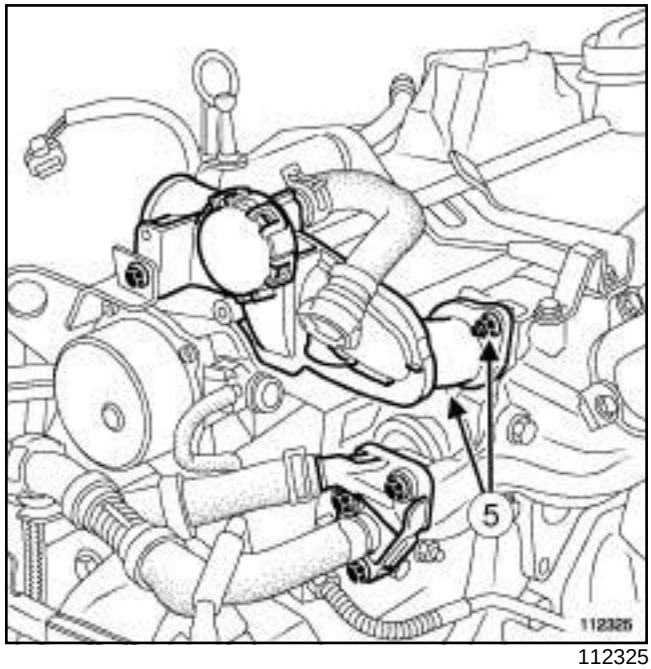

112325

- ❑ Remove the nut (**3**) from the breather mounting on the gearbox.
- ❑ Move the breather mounting away from the gearbox.
- ❑ Remove:
  - the bolts (**4**) of the oil vapour rebreathing valve bracket,
  - the oil vapour rebreathing valve bracket.
- ❑ Disconnect the brake servo pipe union from the vacuum pump.
- ❑ Remove:
  - the nuts (**5**) of the oil vapour rebreathing valve,
  - the oil vapour rebreathing valve.

K9K

K9K, and 832

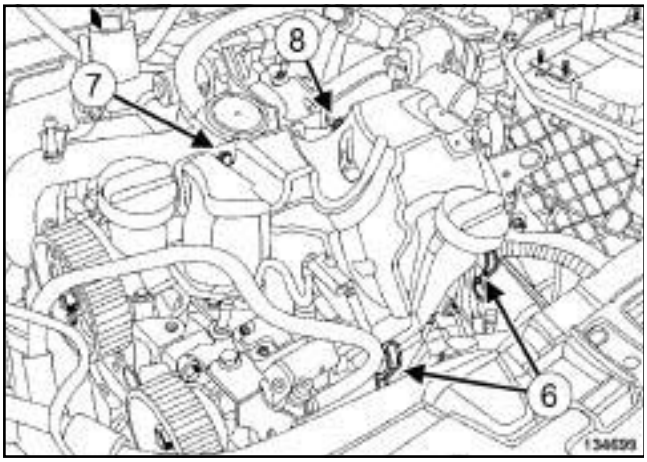

134699

❑ Unclip the injector rail protector cover at (**6**) .

❑ Remove:

- the injector rail protector cover bolt (**7**) ,
- the injector rail protector cover nut (**8**) ,
- the injector rail protector cover.

K9K, and 830

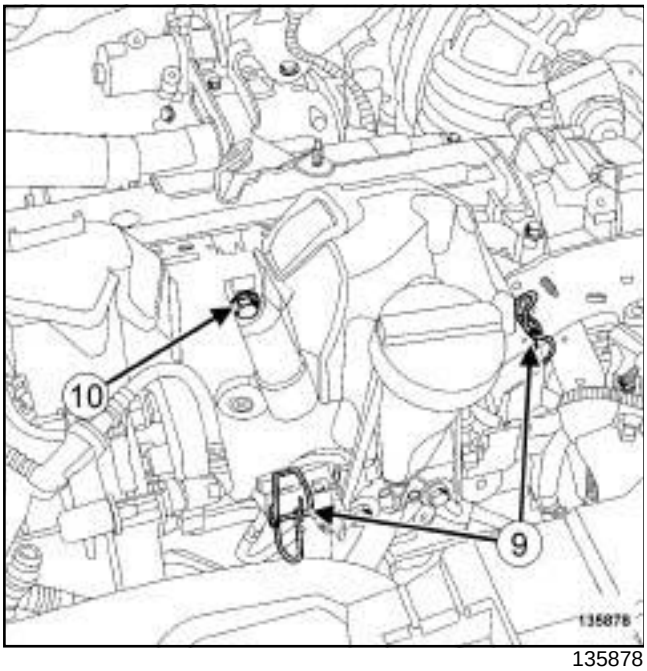

135878

❑ Unclip the injector rail protector cover at (**9**) .

❑ Remove:

- the injector rail protector cover bolt (**10**) ,
- the injector rail protector cover.

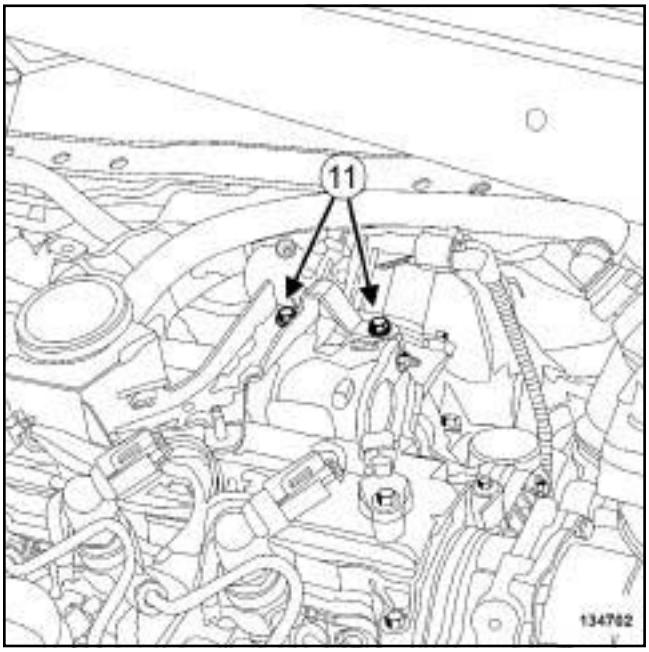

134702

❑ Remove:

- the injector rail protector cover mounting bolts (**11**) ,
- the injector rail protector cover mounting.

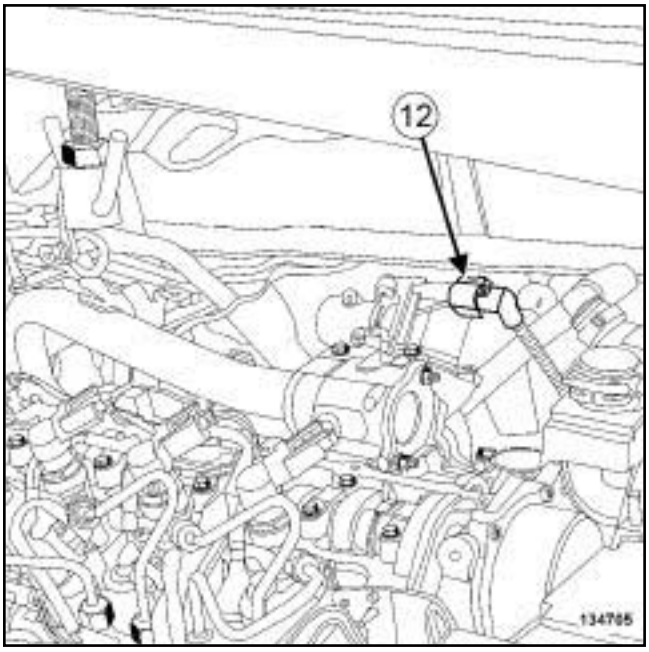

134705

❑ Disconnect the connector (**12**) from the exhaust gas recirculation solenoid valve.

K9K

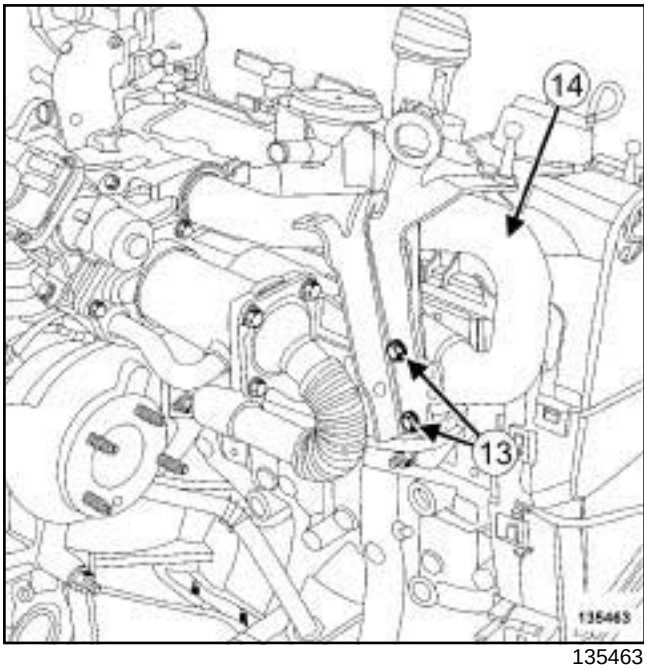

135463

❑ Remove:

- the bolts (**13**) from the lifting eye at the timing end,
- the lifting eye on the timing end,
- the air inlet metal tube (**14**) ,
- the air inlet metal tube seals,
- the rigid exhaust gas recirculation pipe (see **14A**, **Antipollution**, **Exhaust gas recirculation rigid pipe: Removal - Refitting**, page **14A-30**) .

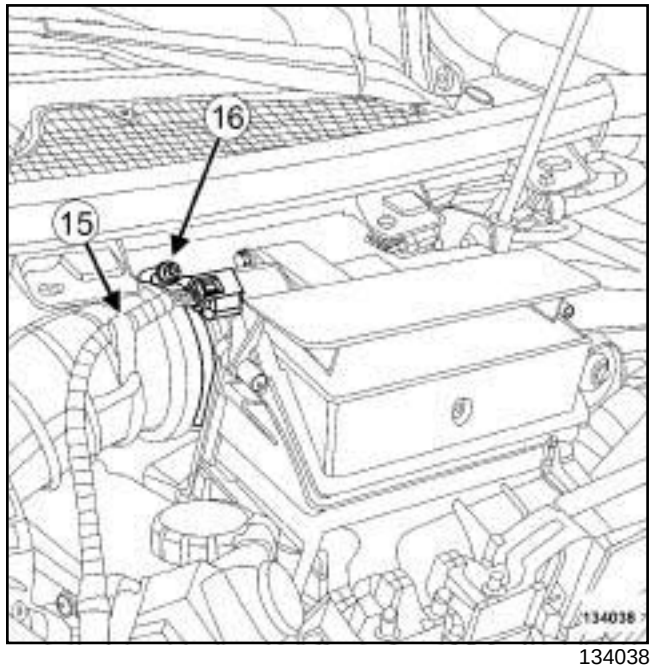

134038

❑ Unclip the air flowmeter wiring from the air filter unit air outlet pipe at (**15**) .

❑ Loosen the clip (**16**) of the air filter unit air outlet pipe from the air filter unit.

❑ Disconnect the air filter unit air outlet pipe from the air filter unit.

K9K

K9K, and 832

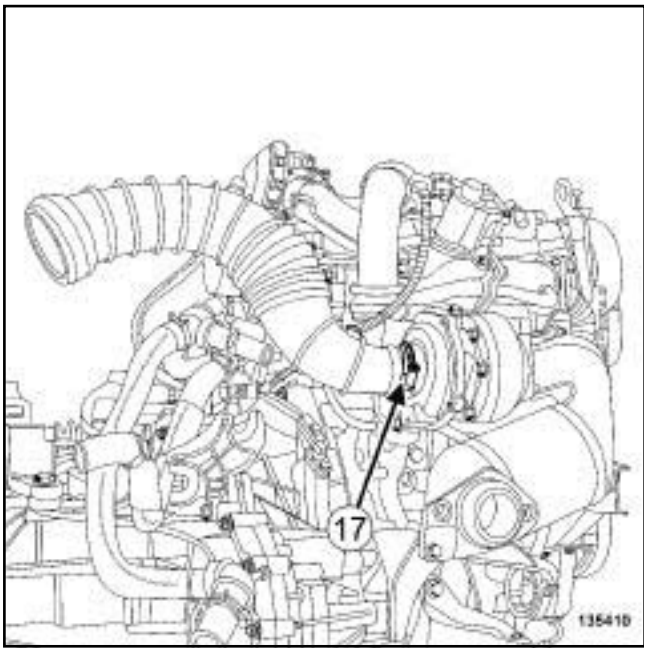

135410

❑ Undo the air filter unit air outlet pipe clip (**17**) from the turbocharger.

K9K, and 830

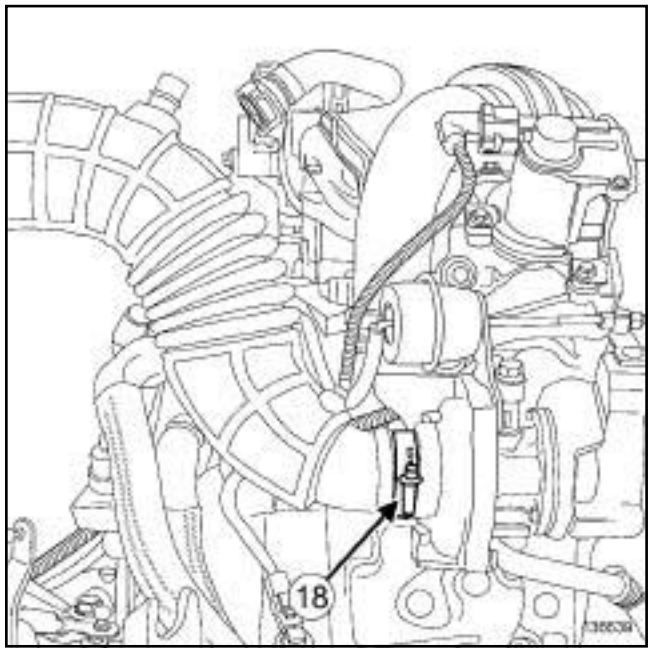

136639

❑ Undo the air filter unit air outlet pipe clip (**18**) from the turbocharger.

❑ Disconnect the air filter unit air outlet pipe from the turbocharger.

❑ Remove the air outlet pipe from the air filter box.

❑ Unclip the hose of the turbocharging pressure regulation solenoid valve from the exhaust gas cooler cover.

K9K

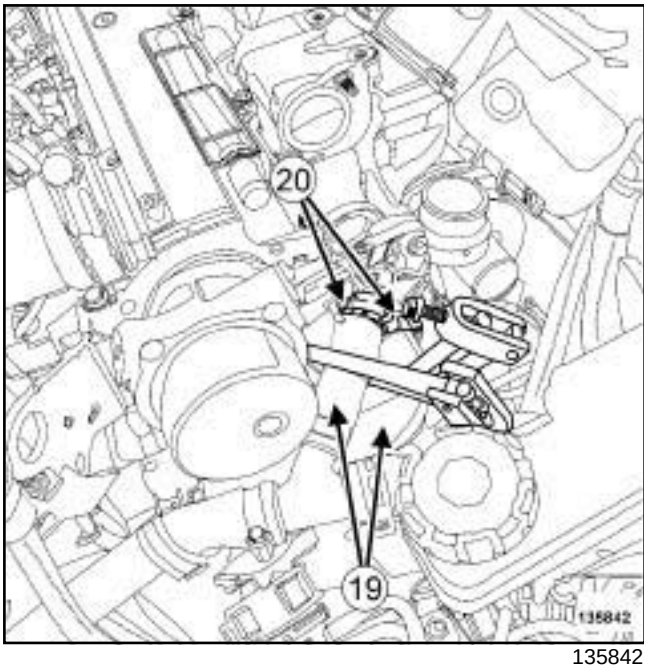

135842

❑ Fit the tool **(Ms. 583)** on each cooling hose (**19**) of the exhaust gas cooler cover.

❑ Separate the clip (**20**) of each cooling hose of the exhaust gas cooler cover (**19**) on the exhaust gas cooler cover using the tool **(Mot. 1448)**.

WARNING
Prepare for the flow of fluid, and protect the surrounding components.

❑ Disconnect the cooling hoses of the exhaust gas cooler cover (**20**) from the exhaust gas cooler cover.

II - OPERATION FOR REMOVAL OF PART CONCERNED

K9K, and 832

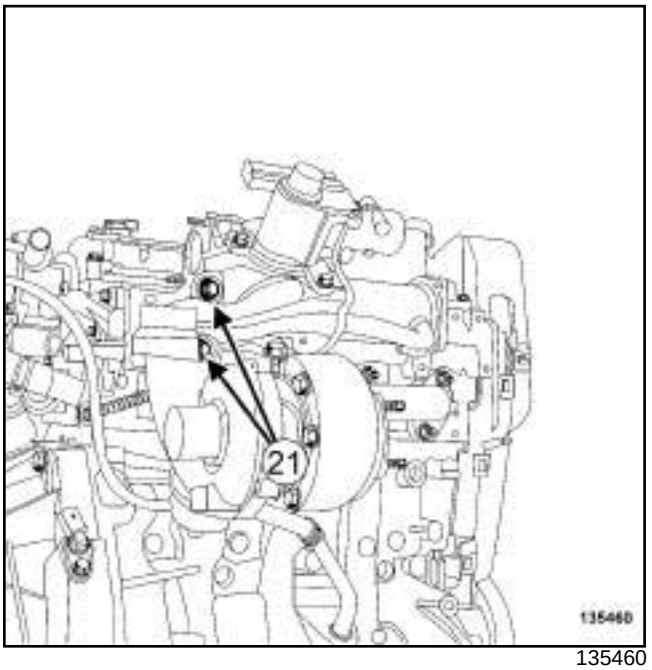

135460

❑ Remove:

- the bolts (**21**) from the exhaust gas recirculation assembly,
- the exhaust gas recirculation assembly.

K9K, and 830

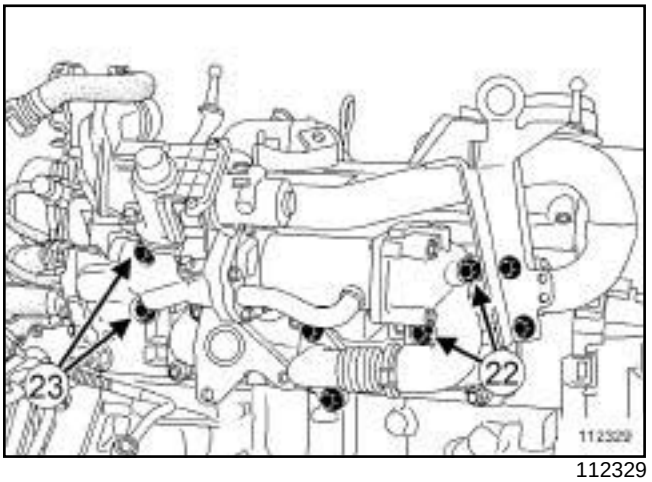

112329

❑ Remove:

- the bolts (**22**) of the exhaust gas recirculation assembly mounting,

K9K

- the bolts (**23**) from the exhaust gas recirculation assembly,
- the exhaust gas recirculation assembly.

REFITTING

I - REFITTING PREPARATION OPERATION

❏ Always replace the seals on the air inlet metal tube.

❏ Use **ABRASIVE PADS** to clean the joint faces of the exhaust gas cooler mounting on the gearbox end.

> **WARNING**
> Do not scrape the joint faces of the aluminium, any damage caused to the joint face will result in a risk of leaks.

❏ Use **SURFACE CLEANER** (see **Vehicle: Parts and ingredients for the repairwork**) (04B, Consumables - Products) to clean and degrease:

- the housing of each air inlet metal tube seal,
- the housing of the air inlet metal tube in the cylinder head,
- the housing of the air inlet metal tube in the exhaust gas cooler mounting on the gearbox end.

> **WARNING**
> To ensure proper sealing, the gasket surfaces must be clean, dry and not greasy (avoid any finger marks).

K9K, and 832

❏ **parts always to be replaced: Exhaust gas recirculation rigid pipe (11,07,01,08)**.

❏ **parts always to be replaced: Exhaust gas recirculation pipe seal (11,07,01,15)**.

II - REFITTING OPERATION FOR PART CONCERNED

K9K, and 832

❏ Fit the new exhaust gas recirculation rigid pipe with a new seal on the exhaust gas recirculation assembly.

❏ Refit the exhaust gas recirculation assembly equipped with the exhaust gas recirculation rigid pipe on the cylinder head.

❏ Fit without tightening:

- the bolts of the exhaust gas recirculation assembly on the cylinder head,
- the bolts of the exhaust gas recirculation rigid pipe bracket on the cylinder head,
- the exhaust gas recirculation rigid pipe bolts on the exhaust manifold.

❏ Tighten to torque:

- the **bolts of the exhaust gas recirculation assembly on the cylinder head (25 N.m)**,
- the **bolts of the exhaust gas recirculation rigid pipe bracket on the cylinder head (25 N.m)**,
- the **bolts of the exhaust gas recirculation rigid pipe on the exhaust manifold (36 N.m)**,
- the **bolts of the exhaust gas recirculation rigid pipe on the exhaust gas recirculation assembly (12 N.m)**.

K9K, and 830

❏ Refit the exhaust gas recirculation assembly.

❏ Tighten to torque:

- the **bolts of the exhaust gas recirculation assembly (25 N.m)**,
- the **bolts of the exhaust gas recirculation assembly mounting (25 N.m)**.

III - FINAL OPERATION

❏ Connect the cooling hoses of the exhaust gas cooler cover.

❏ Fit the clip on each cooling hose of the exhaust gas cooler cover using the tool **(Mot. 1448)**.

K9K

- ❑ Remove the tool **(Ms. 583)** on each cooling hose of the exhaust gas cooler cover.
- ❑ Clip the hose of the turbocharging pressure regulation solenoid valve onto the exhaust gas cooler cover.
- ❑ Refit the air outlet pipe onto the air filter unit.
- ❑ Connect the air filter unit air outlet pipe to the turbocharger.
- ❑ Torque tighten the **air filter unit air outlet pipe clip on the turbocharger (5.5 N.m)**.
- ❑ Connect the air filter unit air outlet pipe to the air filter unit.
- ❑ Torque tighten the **clip of the air filter unit air outlet pipe on the air filter unit (5.5 N.m)**.
- ❑ Clip the air flowmeter wiring onto the air filter unit air outlet pipe.

K9K, and 830

- ❑ Refit the rigid exhaust gas recirculation pipe (see **14A**, **Antipollution**, **Exhaust gas recirculation rigid pipe: Removal - Refitting**, page **14A-30**) .

- ❑ Refit:
  - the air inlet metal tube fitted with new seals,
  - the lifting eye on the timing end.
- ❑ Connect the exhaust gas recirculation solenoid valve connector.
- ❑ Refit:
  - the injector rail protector cover mounting,
  - the injector rail protector cover.
- ❑ Clip the injector rail protector cover into place.

K9K, and 832

- ❑ Refit the damper valve (see **12A**, **Fuel mixture**, **Air inlet flap: Removal - Refitting**, page **12A-11**) .

K9K, and 830

- ❑ Refit the oil vapour rebreathing valve.
- ❑ Connect the brake servo pipe union to the vacuum pump.
- ❑ Refit the oil vapour rebreathing valve bracket.
- ❑ Fit the breather mounting on the gearbox.
- ❑ Refit the nut of the breather mounting on the gearbox.

- ❑ Refit:
  - the turbocharger air outlet pipe (see **12B**, **Turbocharging**, **Intercooler air inlet pipe: Removal - Refitting**, page **12B-41**) ,
  - the oil vapour rebreathing pipe.

K9K, and 832

- ❑ Connect the oil vapour rebreathing pipe:
  - on the rocker cover,
  - on the air filter box air outlet pipe.

K9K, and 830

- ❑ Connect the oil vapour rebreathing pipe to the oil vapour rebreathing valve.
- ❑ Fit the clip of the oil vapour rebreathing pipe on the oil vapour rebreathing valve.
- ❑ Connect the oil vapour rebreathing pipe union to the air filter unit air outlet pipe.

- ❑ Refit:
  - the catalytic converter (see **19B**, **Exhaust**, **Catalytic converter: Removal - Refitting**, page **19B-17**) ,
  - the engine undertray,
  - the engine cover.
- ❑ Connect the battery (see **Battery : Removal - Refitting**) (80A, Battery).
- ❑ Fill and bleed the cooling system (see **19A**, **Cooling**, **Cooling circuit: Draining - Refilling**, page **19A-17**) .

F9Q

Essential special tooling	
Ms. 583	Hose clamp pliers.
Mot. 1448	Long nose pliers for hose clips.

Tightening torques ▽	
exhaust gas recirculation assembly bolts	**25 N.m**

REMOVAL

I - REMOVAL PREPARATION OPERATION

❑ Position the vehicle on a two-post lift (see **Vehicle: Towing and lifting**) (02A, Lifting equipment).

❑ Remove:

- the engine cover,
- the engine undertray bolts,
- the engine undertray,
- the windscreen wiper arms (see **Windscreen wiper arm: Removal - Refitting**) (85A, Wiping - Washing),
- the scuttle panel grille (see **Scuttle panel grille: Removal - Refitting**) (56A, Exterior equipment),
- the scoop under the scuttle panel grille (see **Scoop under scuttle panel grille: Removal - Refitting**) (56A, Exterior equipment),
- the battery (see **Battery: Removal - Refitting**) (80A, Battery),
- the battery tray (see **Battery tray: Removal - Refitting**) (80A, Battery),
- the intercooler air inlet pipe (see **12B**, **Turbocharging**, **Intercooler air inlet pipe: Removal - Refitting**, page **12B-41**) ,
- the exhaust gas recirculation rigid pipes (see **14A**, **Antipollution**, **Exhaust gas recirculation rigid pipe: Removal - Refitting**, page **14A-30**) .

II - OPERATION FOR REMOVAL OF PART CONCERNED

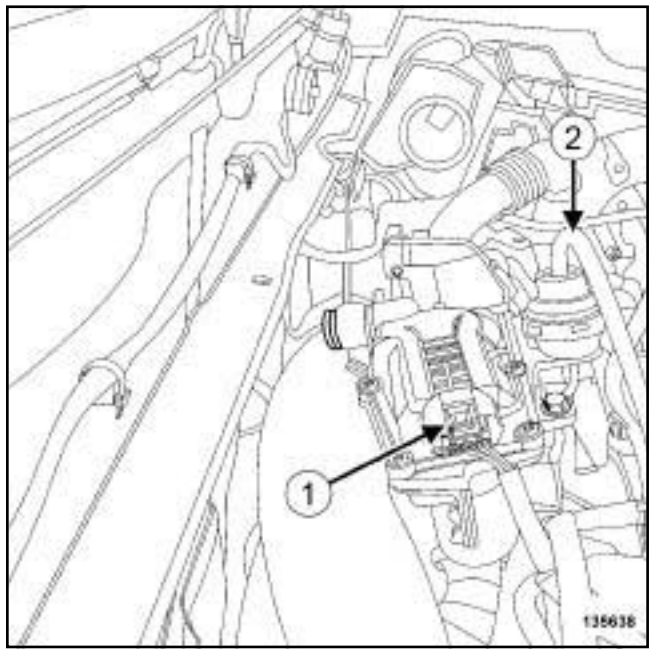

135638

❑ Disconnect:

- the exhaust gas recirculation solenoid valve connector (**1**) ,
- the air pipe (**2**) of the exhaust gas recirculation bypass control solenoid valve.

F9Q

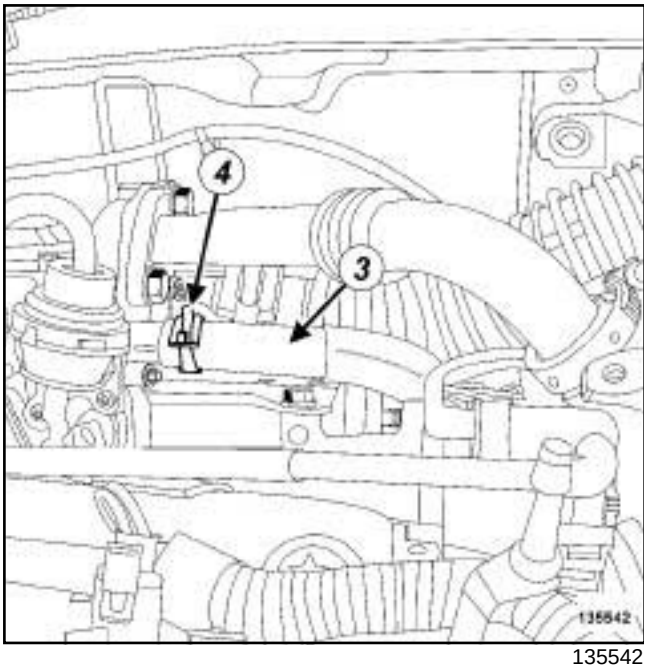

135542

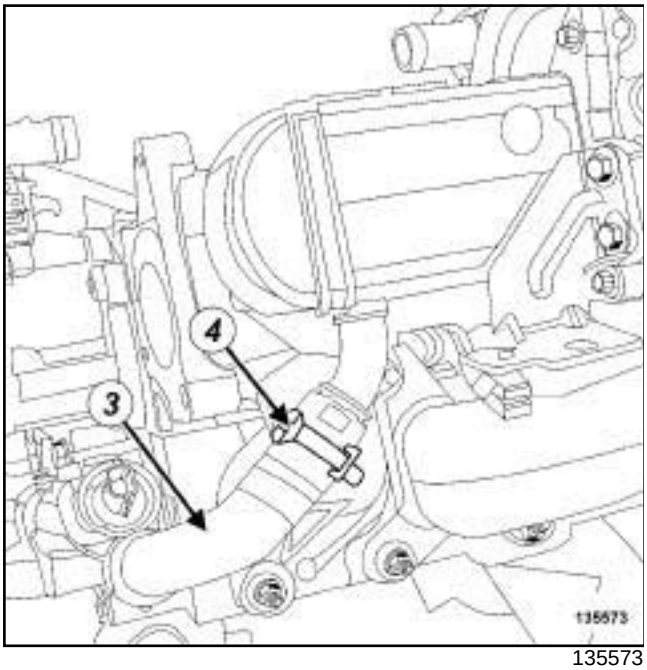

135573

❑ Fit the tools **(Ms. 583)** on the exhaust gas cooler hoses (**3**) .

❑ Separate the clips (**4**) on the exhaust gas cooler hoses using the tool **(Mot. 1448)**.

❑ Disconnect the hoses from the exhaust gas cooler.

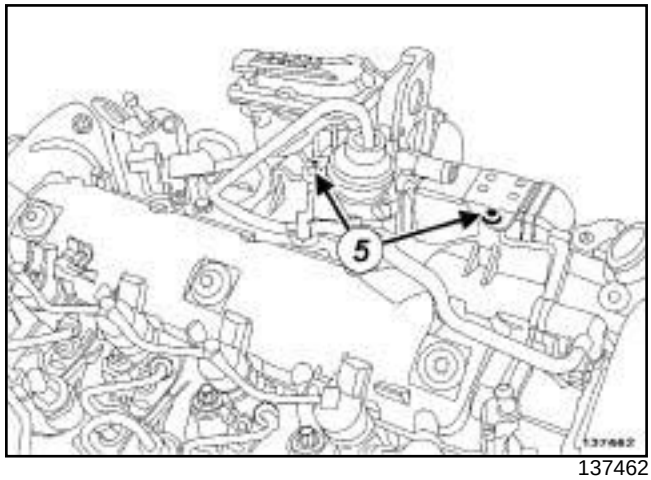

137462

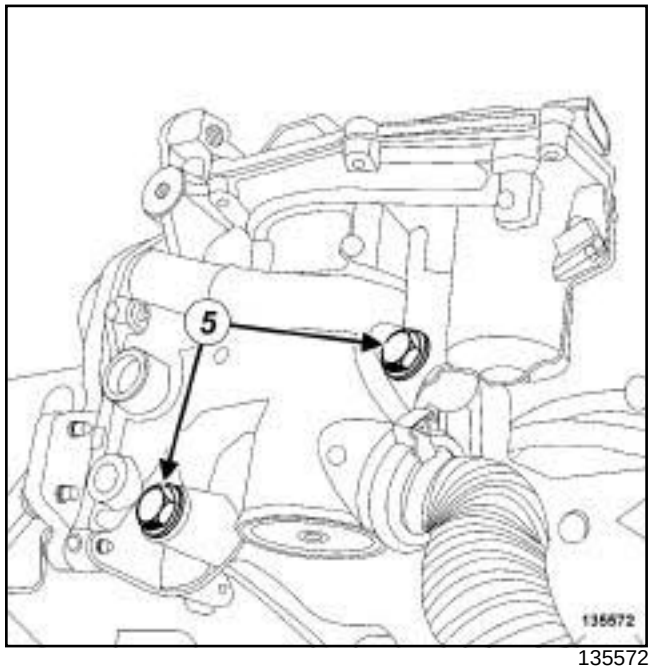

135572

❑ Remove:

- the bolts (**5**) from the exhaust gas recirculation assembly,
- the exhaust gas recirculation assembly.

REFITTING

I - REFITTING OPERATION FOR PART CONCERNED

❑ Refit the exhaust gas recirculation assembly.

❑ Torque tighten the **exhaust gas recirculation assembly bolts (25 N.m)**.

❑ Connect the exhaust gas cooler hoses.

❑ Fit the clips on the exhaust gas cooler hoses using the tool **(Mot. 1448)**.

F9Q

- Remove the tools **(Ms. 583)** from the exhaust gas cooler hoses.
- Connect:
  - the air pipe of the exhaust gas recirculation bypass control solenoid valve,
  - the exhaust gas recirculation solenoid valve connector.

II - FINAL OPERATION

- Refit:
  - the exhaust gas recirculation rigid pipes (see **14A**, **Antipollution**, **Exhaust gas recirculation rigid pipe: Removal - Refitting**, page **14A-30**) ,
  - the intercooler air inlet pipe (see **12B**, **Turbocharging**, **Intercooler air inlet pipe: Removal - Refitting**, page **12B-41**) ,
  - the battery tray (see **Battery tray: Removal - Refitting**) (80A, Battery),
  - the battery (see **Battery : Removal - Refitting**) (80A, Battery),
  - the scoop under the scuttle panel grille (see **Scoop under scuttle panel grille: Removal - Refitting**) (56A, Exterior equipment),
  - the scuttle panel grille (see **Scuttle panel grille: Removal - Refitting**) (56A, Exterior equipment),
  - the windscreen wiper arms (see **Windscreen wiper arm: Removal - Refitting**) (85A, Wiping - Washing),
  - the engine undertray,
  - the engine cover.
- Bleed the cooling system (see **19A**, **Cooling**, **Cooling circuit: Draining - Refilling**, page **19A-17**) .

K9K

Tightening torques ▽	
bolts of the exhaust gas recirculation rigid pipe bracket on the cylinder head	**25 N.m**
bolts of the exhaust gas recirculation rigid pipe on the exhaust manifold	**36 N.m**
bolts of the exhaust gas recirculation rigid pipe on the exhaust gas recirculation assembly	**12 N.m**
exhaust gas recirculation pipe bolts	**36 N.m**
exhaust gas recirculation pipe clip	**5 N.m**

IMPORTANT
Wear protective gloves during the operation.

REMOVAL

I - REMOVAL PREPARATION OPERATION

❑ Position the vehicle on a two-post lift (see **Vehicle: Towing and lifting**) (02A, Lifting equipment).

❑ Disconnect the battery (see **Battery: Removal - Refitting**) (80A, Battery).

J95

❑ Remove:

- the windscreen wiper arms (see **Windscreen wiper arm: Removal - Refitting**) ,
- the scuttle panel grille (see **Scuttle panel grille: Removal - Refitting**) ,
- the brake fluid reservoir from the scoop under the scuttle panel grille,
- the scoop under the scuttle panel grille (see **Scoop under scuttle panel grille: Removal - Refitting**) .

❑ Remove:

- the engine cover,
- the engine undertray bolts,
- the engine undertray,
- the catalytic converter (see **19B**, **Exhaust**, **Catalytic converter: Removal - Refitting**, page **19B-17**) .

K9K, and 832

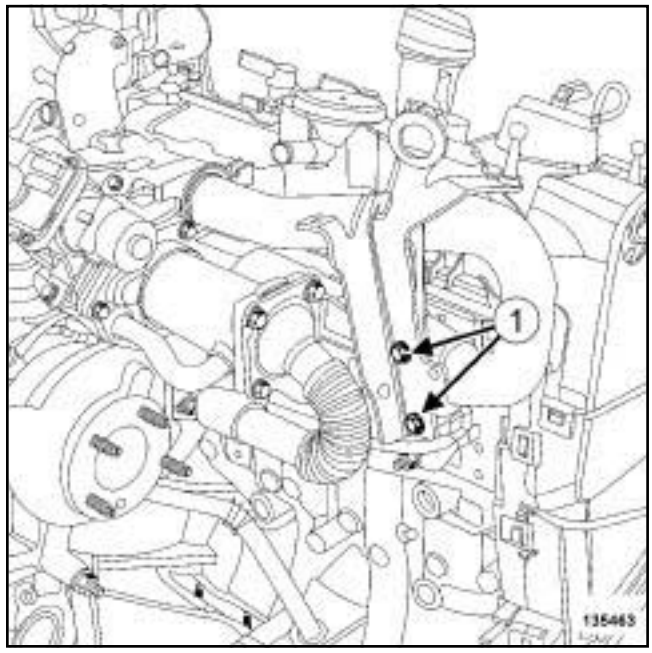

135463

❑ Remove:

- the bolts (**1**) from the lifting eye at the timing end,
- the lifting eye on the timing end.

K9K

II - OPERATION FOR REMOVAL OF PART CONCERNED

K9K, and 832

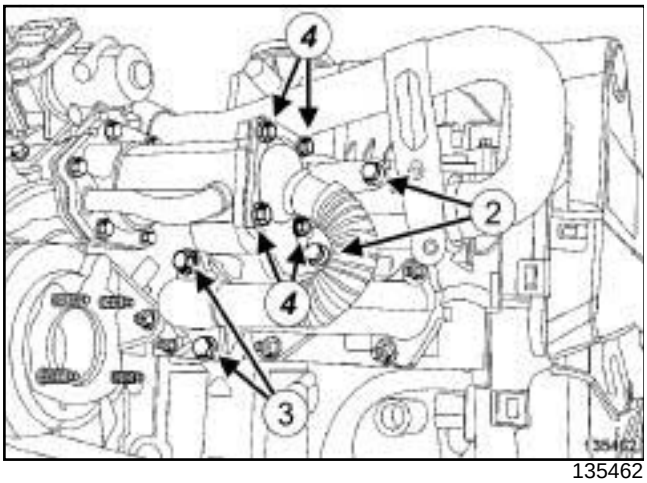

135462

❑ Remove:

- the bolts (**2**) of the exhaust gas recirculation rigid pipe bracket from the cylinder head,
- the bolts (**3**) of the exhaust gas recirculation rigid pipe from the exhaust manifold,
- the bolts (**4**) of the exhaust gas recirculation rigid pipe from the exhaust gas recirculation assembly,
- the exhaust gas recirculation rigid pipe,
- the exhaust gas recirculation pipe rigid seal.

K9K, and 830

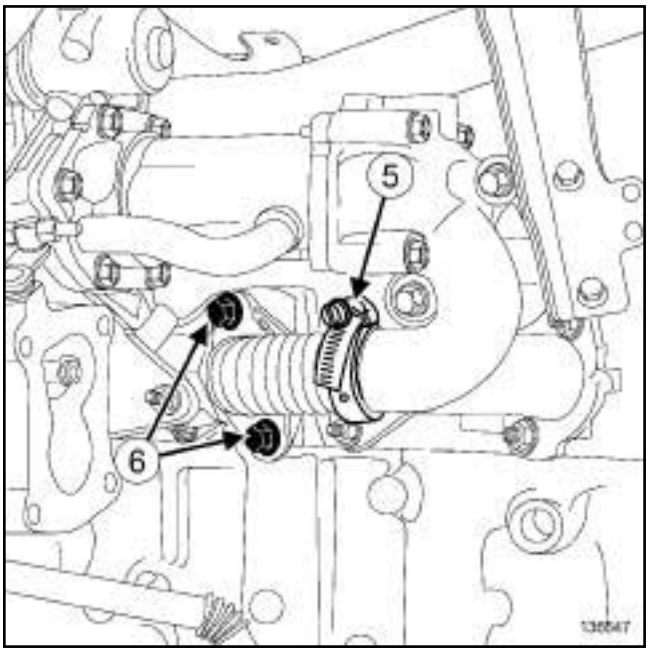

136647

❑ Loosen the clip (**5**) of the exhaust gas recirculation rigid pipe from the exhaust gas recirculation assembly mounting.

❑ Remove:

- the bolts (**6**) from the EGR rigid pipe,
- the exhaust gas recirculation rigid pipe,
- the exhaust gas recirculation rigid pipe clip,
- the exhaust gas recirculation rigid pipe seal.

REFITTING

I - REFITTING PREPARATION OPERATION

❑ **parts always to be replaced: Exhaust gas recirculation rigid pipe (11,07,01,08)**.

❑ **parts always to be replaced: Exhaust gas recirculation pipe seal (11,07,01,15)**.

K9K, and 830

❑ **parts always to be replaced: Exhaust gas recirculation pipe clip (11,07,01,14)**.

K9K

❏ Use **ABRASIVE PADS** to clean the joint face of the exhaust manifold.

> **WARNING**
> Do not scrape the joint faces of the aluminium, any damage caused to the joint face will result in a risk of leaks.

K9K, and 832

❏ Use **ABRASIVE PADS** to clean the joint face of the exhaust gas recirculation assembly.

❏ Use **SURFACE CLEANER** (see **Vehicle: Parts and ingredients for the repairwork**) (04B, Consumables - Products) and **CLEAN CLOTHS** to degrease the joint face of the exhaust manifold.

> **WARNING**
> To ensure proper sealing, the gasket surfaces must be clean, dry and not greasy (avoid any finger marks).

K9K, and 832

❏ Use **SURFACE CLEANER** (see **Vehicle: Parts and ingredients for the repairwork**) (04B, Consumables - Products) and **CLEAN CLOTHS** to degrease the joint face of the exhaust gas recirculation assembly.

II - REFITTING OPERATION FOR PART CONCERNED

K9K, and 832

❏ Fit the new exhaust gas recirculation rigid pipe with a new seal.

❏ Fit without tightening:

- the bolts of the exhaust gas recirculation rigid pipe on the exhaust gas recirculation assembly,
- the bolts to the exhaust gas recirculation rigid pipe on the exhaust manifold,
- the bolts to the exhaust gas recirculation rigid pipe bracket on the cylinder head.

❏ Tighten to torque:

- the **bolts of the exhaust gas recirculation rigid pipe bracket on the cylinder head (25 N.m)**,
- the **bolts of the exhaust gas recirculation rigid pipe on the exhaust manifold (36 N.m)**,
- the **bolts of the exhaust gas recirculation rigid pipe on the exhaust gas recirculation assembly (12 N.m)**.

K9K, and 830

❏ Refit the new exhaust gas recirculation rigid pipe with a new seal and a new clip.

❏ Tighten to torque:

- the **exhaust gas recirculation pipe bolts (36 N.m)**,
- the **exhaust gas recirculation pipe clip (5 N.m)**.

III - FINAL OPERATION

K9K, and 832

❏ Refit the engine lifting eye at the timing end.

❏ Refit:

- the catalytic converter (see **19B**, **Exhaust**, **Catalytic converter: Removal - Refitting**, page **19B-17**) ,
- the engine undertray,

K9K

- the engine cover.

J95

❑ Refit:

- the scoop under the scuttle panel grille (see **Scoop under scuttle panel grille: Removal - Refitting**) .
- the brake fluid reservoir of the scoop under the scuttle panel grille
- the scuttle panel grille (see **Scuttle panel grille: Removal - Refitting**) ,
- the windscreen wiper arms (see **Windscreen wiper arm: Removal - Refitting**) .

❑ Connect the battery (see **Battery : Removal - Refitting**) (80A, Battery).

F9Q

Essential special tooling	
Mot. 1567	Long nose pliers for EGR duct clips.

Tightening torques ▽	
EGR upper rigid pipe bolts	**25 N.m**
EGR lower rigid pipe bolts	**30 N.m**

REMOVING THE EXHAUST GAS RECIRCULATION UPPER RIGID PIPE

I - REMOVAL PREPARATION OPERATION

❑ Remove the front engine cover.

II - OPERATION FOR REMOVAL OF PART CONCERNED

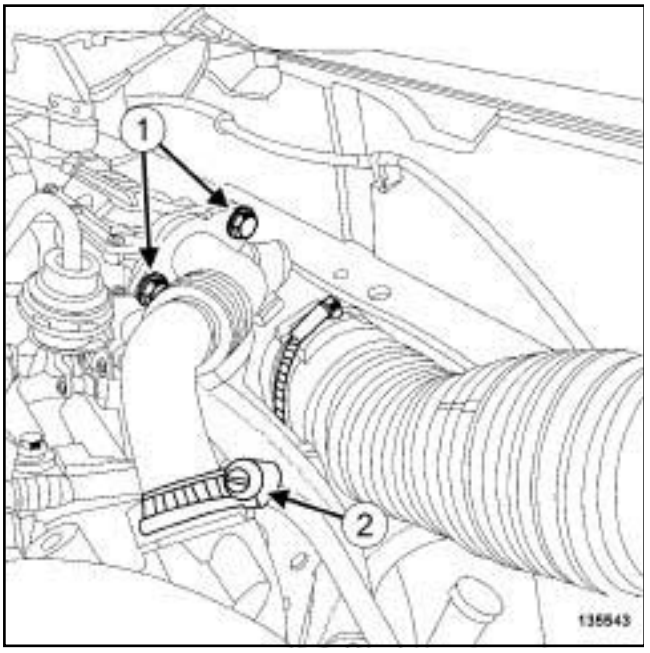

135543

❑ Remove the bolts (**1**) from the exhaust gas recirculation upper rigid pipe.

❑ Loosen the clip (**2**) on the exhaust gas recirculation upper rigid pipe.

❑ Remove:

- the exhaust gas recirculation upper rigid pipe,
- the seal of the exhaust gas recirculation upper rigid pipe,
- the clip of the exhaust gas recirculation upper rigid pipe.

REFITTING THE EXHAUST GAS RECIRCULATION UPPER RIGID PIPE

I - REFITTING PREPARATION OPERATION

❑ **parts always to be replaced: Exhaust gas recirculation pipe clip (11,07,01,14)**.

parts always to be replaced: Exhaust gas recirculation pipe seal (11,07,01,15).

❑ Use **SURFACE CLEANER** (see **Vehicle: Parts and ingredients for the repairwork**) (04B, Consumables - Products) to clean and degrease the joint faces:

- the exhaust gas recirculation solenoid valve,
- the intercooler air outlet pipe.

II - REFITTING OPERATION FOR PART CONCERNED

❑ Refit:

- a new seal of the exhaust gas recirculation upper rigid pipe,
- a new clip of the exhaust gas recirculation upper rigid pipe,
- the exhaust gas recirculation upper rigid pipe.

❑ Torque tighten the **EGR upper rigid pipe bolts (25 N.m)**.

III - FINAL OPERATION

❑ Refit the engine cover.

REMOVING THE EXHAUST GAS RECIRCULATION LOWER RIGID PIPE

I - REMOVAL PREPARATION OPERATION

❑ Position the vehicle on a two-post lift (see **Vehicle: Towing and lifting**) (02A, Lifting equipment).

❑ Remove:

- the engine cover,
- the engine undertray bolts,
- the engine undertray,
- the windscreen wiper arms (see **Windscreen wiper arm: Removal - Refitting**) (85A, Wiping - Washing),

- the scuttle panel grille (see **Scuttle panel grille: Removal - Refitting**) (56A, Exterior equipment),
- the scoop under the scuttle panel grille (see **Scoop under scuttle panel grille: Removal - Refitting**) (56A, Exterior equipment),
- the battery (see **Battery : Removal - Refitting**) (80A, Battery),
- the battery tray (see **Battery tray: Removal - Refitting**) (80A, Battery),
- the intercooler air inlet pipe (see **12B**, **Turbocharging**, **Intercooler air inlet pipe: Removal - Refitting**, page **12B-41**) .

II - OPERATION FOR REMOVAL OF PART CONCERNED

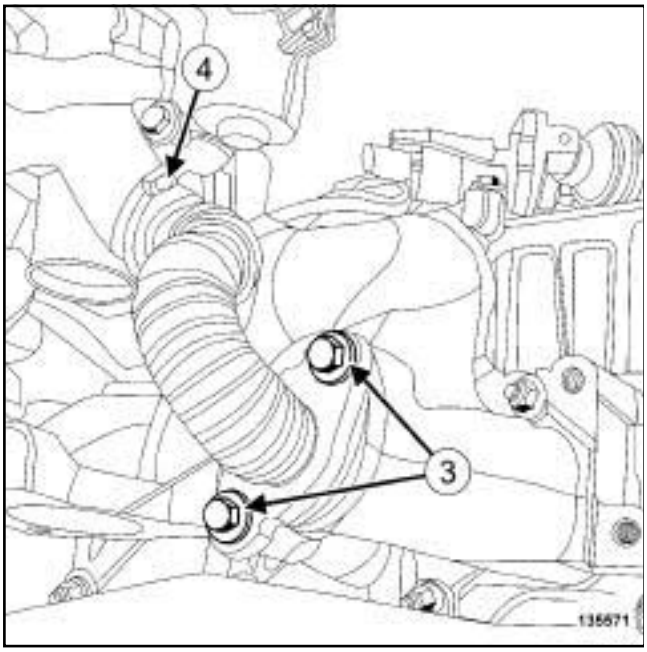

135571

❑ Remove:

- the bolts (**3**) from the exhaust gas recirculation lower rigid pipe,
- the clip (**4**) of the exhaust gas recirculation lower rigid pipe,
- the exhaust gas recirculation lower rigid pipe,
- the seal of the exhaust gas recirculation lower rigid pipe.

REFITTING THE EXHAUST GAS RECIRCULATION LOWER RIGID PIPE

I - REFITTING PREPARATION OPERATION

❑ **parts always to be replaced: Exhaust gas recirculation pipe clip (11,07,01,14)**.

parts always to be replaced: Exhaust gas recirculation pipe seal (11,07,01,15).

❑ Use **SURFACE CLEANER** (see **Vehicle: Parts and ingredients for the repairwork**) (04B, Consumables - Products) to clean and degrease the joint faces:

- of the exhaust gas recirculation solenoid valve,
- of the exhaust manifold.

II - REFITTING OPERATION FOR PART CONCERNED

❑ Refit:

- a new seal of the exhaust gas recirculation lower rigid pipe,
- a new clip of the exhaust gas recirculation lower rigid pipe,
- the exhaust gas recirculation lower rigid pipe.

❑ Attach the clip of the exhaust gas recirculation lower rigid pipe using the tool **(Mot. 1567)**.

❑ Torque tighten the **EGR lower rigid pipe bolts (30 N.m)**.

III - FINAL OPERATION

❑ Refit:

- the intercooler air inlet pipe (see **12B**, **Turbocharging**, **Intercooler air inlet pipe: Removal - Refitting**, page **12B-41**) ,
- the battery tray (see **Battery tray: Removal - Refitting**) (80A, Battery),
- the battery (see **Battery : Removal - Refitting**) (80A, Battery),
- the scoop under the scuttle panel grille (see **Scoop under scuttle panel grille: Removal - Refitting**) (56A, Exterior equipment),
- the scuttle panel grille (see **Scuttle panel grille: Removal - Refitting**) (56A, Exterior equipment),
- the windscreen wiper arms (see **Windscreen wiper arm: Removal - Refitting**) (85A, Wiping - Washing),
- the engine undertray,

F9Q

- the engine cover.

K9K, and 836

REMOVAL

I - REMOVAL PREPARATION OPERATION

❑ Position the vehicle on a two-post lift (see **Vehicle: Towing and lifting**) (02A, Lifting equipment).

❑ Remove:

- the engine cover,
- the engine undertray bolts,
- the engine undertray.

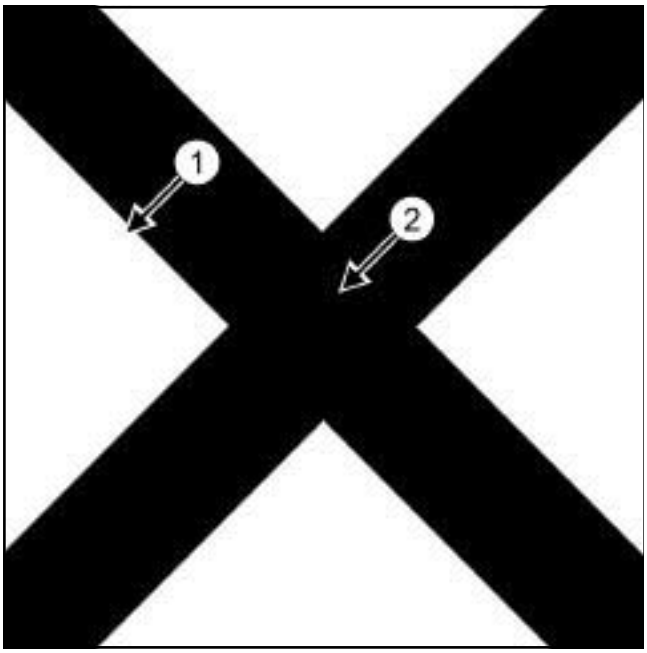

100000-1

❑ Undo:

- the air filter unit air outlet pipe clip (**1**) on the air filter unit,
- the air filter unit air outlet pipe clip (**2**) on the turbocharger air inlet pipe.

❑ Remove the air filter unit air outlet pipe.

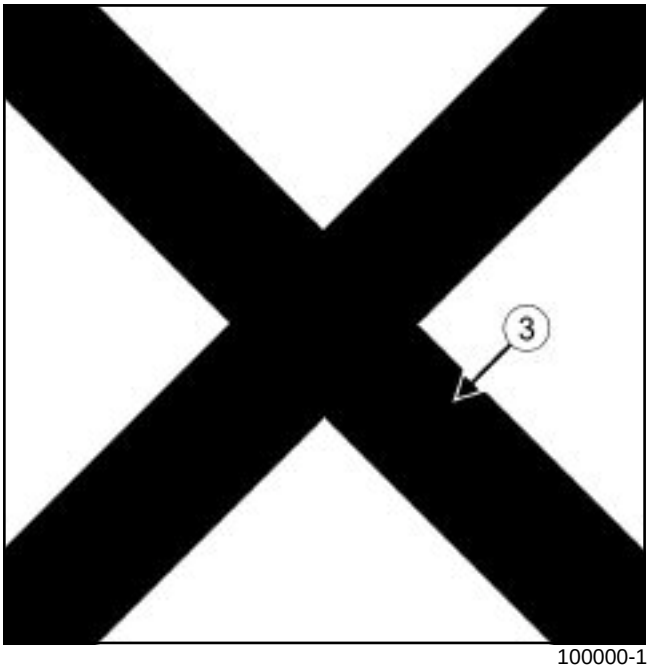

100000-1

❑ Unclip the turbocharging pressure regulation solenoid valve hose from the turbocharger air inlet pipe at (**3**) .

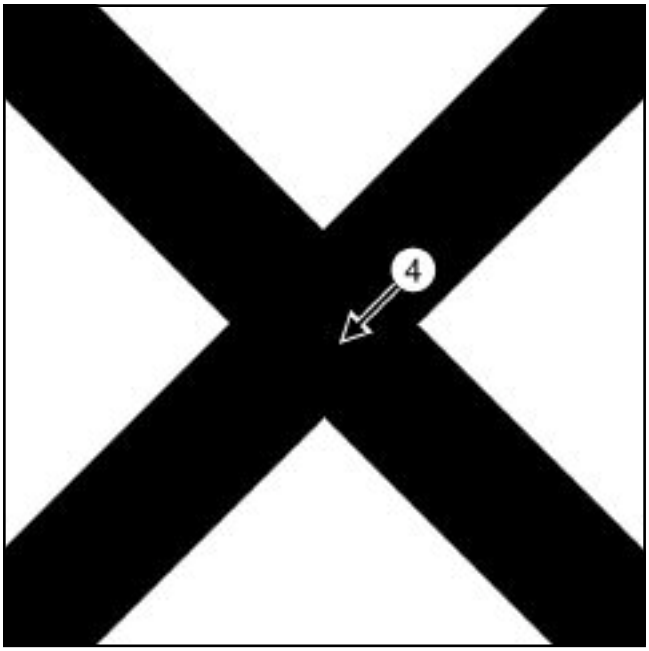

100000-1

❑ Remove the turbocharger air inlet pipe bolt from the exhaust gas recirculation assembly (**4**) .

K9K, and 836

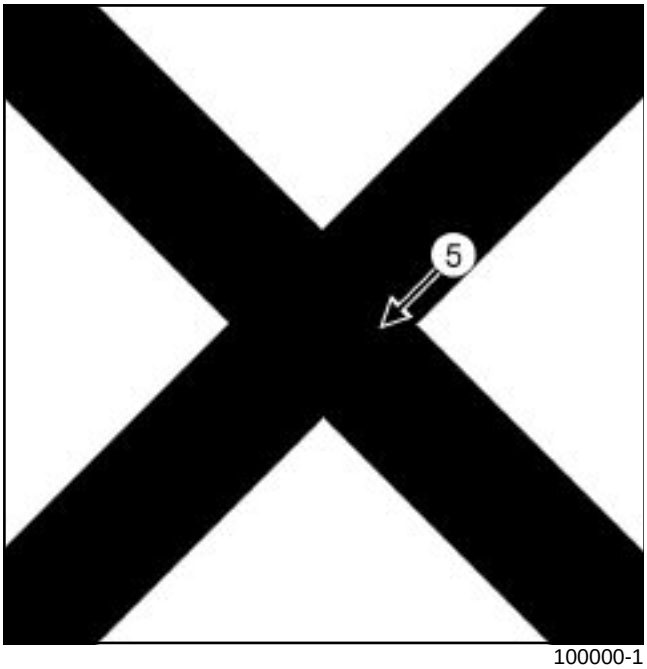

100000-1

❑ Disconnect the oil vapour rebreathing pipe from the rocker cover (**5**) .

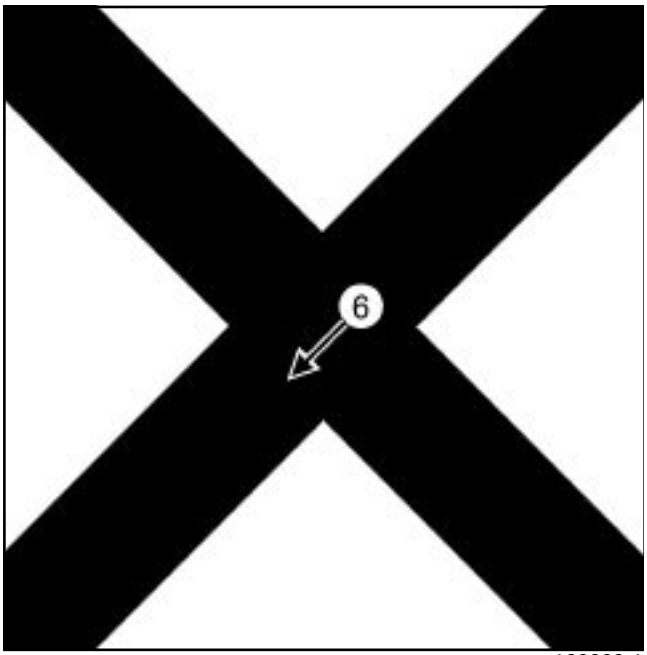

100000-1

❑ Remove:

- the turbocharger air inlet pipe bolts (**6**) from the turbocharger,
- the turbocharger air inlet pipe.

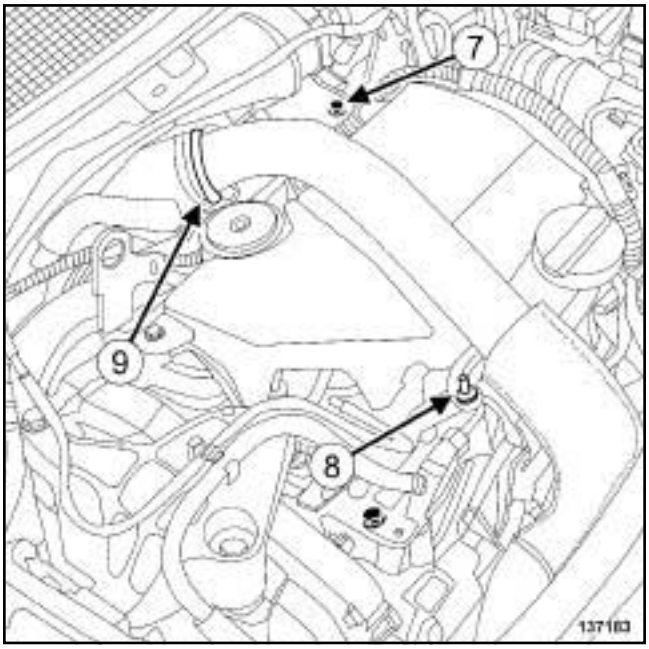

137183

❑ Remove:

- the bolt (**7**) of the intermediate air pipe between the turbocharger and the intercooler,
- the nut (**8**) for the intermediate air pipe between the turbocharger and the intercooler,
- the clip (**9**) of the intermediate air pipe between the turbocharger and the intercooler.

❑ Remove the intermediate air pipe between the turbocharger and the intercooler.

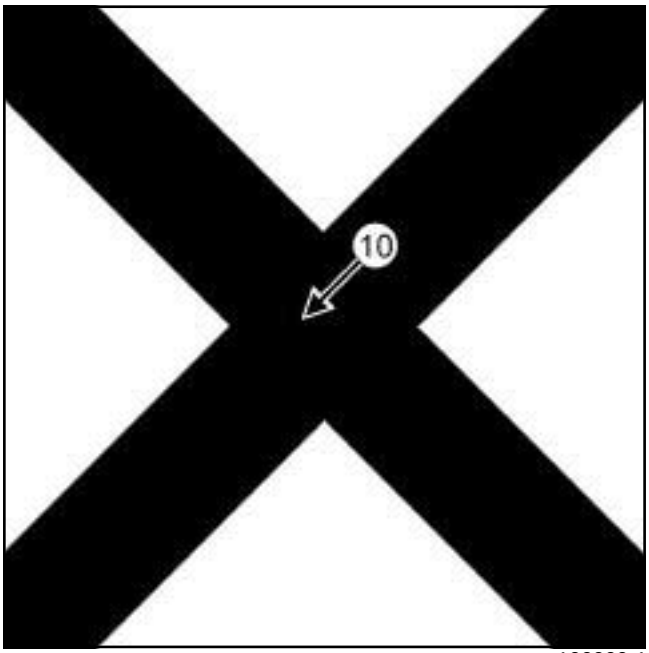

100000-1

❑ Remove:

- the clip (**10**) of the turbocharger air outlet pipe,

K9K, and 836

- the turbocharger air outlet pipe.

❑ Remove the turbocharger outlet exhaust gas duct (see **12B**, **Turbocharging**, **Turbocharger outlet exhaust gas duct: Removal - Refitting**, page **12B-49**) .

II - OPERATION FOR REMOVAL OF PART CONCERNED

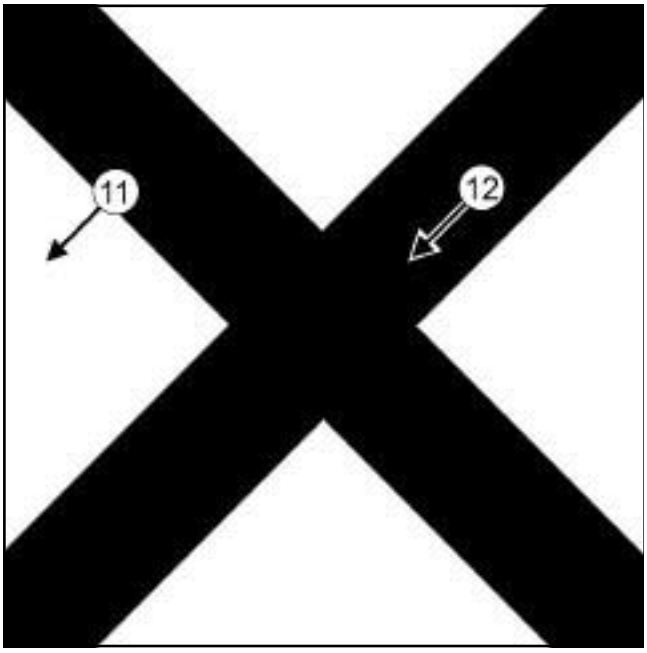

100000-1

❑ Remove:

- the exhaust gas recirculation rigid pipe clip (**11**) from the exhaust manifold,
- the exhaust gas recirculation rigid pipe clip (**12**) from the exhaust gas recirculation assembly,
- the EGR rigid pipe.

REFITTING

I - REFITTING PREPARATION OPERATION

❑ **parts always to be replaced: Exhaust gas recirculation rigid pipe (11,07,01,08)**.

❑ **parts always to be replaced: Exhaust gas recirculation pipe clip (11,07,01,14)**.

❑ Using **ABRASIVE PADS**, clean the bearing face of:

- the exhaust manifold,
- the exhaust gas recirculation assembly support.

❑ Using **SURFACE CLEANER** (see **Vehicle: Parts and ingredients for the repairwork**) (04B, Consumables - Products) and **CLEAN CLOTHS**, degrease the bearing face of:

- the exhaust manifold,
- the exhaust gas recirculation assembly support.

II - REFITTING OPERATION FOR PART CONCERNED

❑ Fit the new exhaust gas recirculation rigid pipe.

❑ Refit a new exhaust gas recirculation rigid pipe clip on:

- the exhaust manifold,
- the exhaust gas recirculation assembly support.

III - FINAL OPERATION

❑ Refit the turbocharger outlet exhaust gas duct (see **12B**, **Turbocharging**, **Turbocharger outlet exhaust gas duct: Removal - Refitting**, page **12B-49**) .

❑ Refit:

- the turbocharger air outlet pipe clip to the turbocharger air outlet pipe,
- the turbocharger air outlet pipe to the turbocharger.

❑ Fit the intermediate air pipe between the turbocharger and the intercooler.

❑ Refit the clip for the intermediate air pipe between the turbocharger and the intercooler.

❑ Clip the intermediate air pipe between the turbocharger and the intercooler onto the turbocharger air outlet pipe.

❑ Refit:

- the nut of the intermediate air pipe between the turbocharger and the intercooler,
- the bolt of the intermediate air pipe between the turbocharger and the intercooler,
- the turbocharger air inlet pipe,
- he turbocharger air inlet pipe bolts on the turbocharger.

❑ Connect the oil vapour rebreathing pipe onto the rocker cover.

❑ Refit the turbocharger air inlet pipe bolt onto the exhaust gas recirculation assembly.

❑ Clip the turbocharging pressure regulation solenoid valve hose onto the turbocharger air inlet pipe.

❑ Refit the air outlet pipe onto the air filter unit.

K9K, and 836

- Tighten the clip of the air filter unit air outlet pipe on:
  - the turbocharger air inlet pipe,
  - the air filter unit.
- Refit:
  - the engine undertray,
  - the engine cover.

K4M

Tightening torques ▽	
alternator bolts	**25 N.m**
alternator strut bolt on the alternator	**25 N.m**
alternator strut nut on the cylinder block	**25 N.m**
alternator strut bolt on the alternator	**25 N.m**
alternator strut bolt on the cylinder block	**25 N.m**
nut for the positive terminal of the alternator	**21 N.m**

IMPORTANT
Wear protective gloves during the operation.

REMOVAL

I - REMOVAL PREPARATION OPERATION

❑ Position the vehicle on a two-post lift (see **Vehicle: Towing and lifting**) (02A, Lifting equipment).

❑ Disconnect the battery (see **Battery: Removal - Refitting**) (80A, Battery).

❑ Remove the front engine cover.

K4M, and 858 or 866

❑ Remove:

- the front wheels (see **Wheel: Removal - Refitting**) (35A, Wheels and tyres),
- the front section of the front wheel arch liners (see **Front wheel arch liner: Removal - Refitting**) (55A, Exterior protection).

K4M, and 848

❑ Remove:

- the front right-hand wheel (see **Wheel: Removal - Refitting**) (35A, Wheels and tyres),
- the front section of the front right-hand wheel arch liner (see **Front wheel arch liner: Removal - Refitting**) (55A, Exterior protection).

❑ Remove:

- the engine undertray bolts,
- the engine undertray,
- the accessories belt (see **11A**, **Top and front of engine**, **Accessories belt: Removal - Refitting**, page **11A-7**) .

K4M, and 848

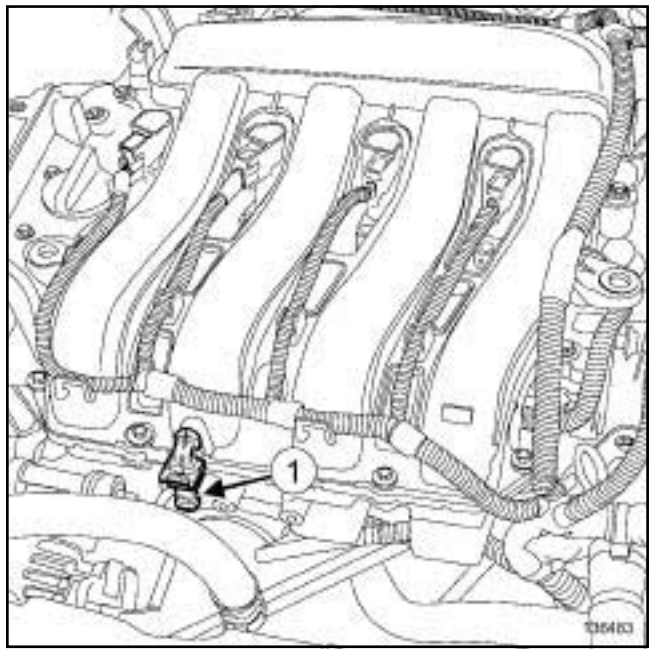

136483

❑ Disconnect the connector (**1**) from the air temperature sensor on the intake manifold.

❑ Remove the oil filter (see **10A**, **Engine and cylinder block assembly**, **Oil filter: Removal - Refitting**, page **10A-48**) .

K4M

K4M, and 858 or 866

❑ Remove:

- the front bumper (see **Front bumper: Removal - Refitting**) (55A, Exterior protection),
- the air deflectors,
- the headlights (see **Front headlight: Removal - Refitting**) (80B, Headlights),
- the front bumper mountings (see **Front bumper support: Removal - Refitting**) (42A, Front upper structure),
- the audible warning (see **Horn: Removal - Refitting**) (82B, Horn),
- the front impact cross member (see **Front impact cross member: Removal - Refitting**) (41A, Front lower structure),
- the bonnet catch (see **Bonnet latch: Removal - Refitting**) (52A, Non-side opening element mechanisms),
- the engine wiring channel from the cooling fan assembly.

❑ Unclip the hoses from the cooling fan assembly.

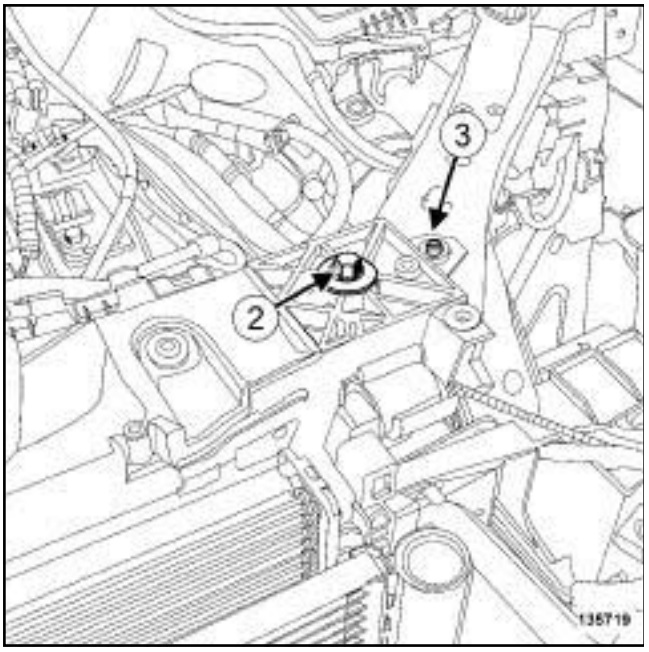

135719

❑ Remove:

- the upper bolts (**2**) from the front end panel,
- the front end panel upper clips (**3**) .

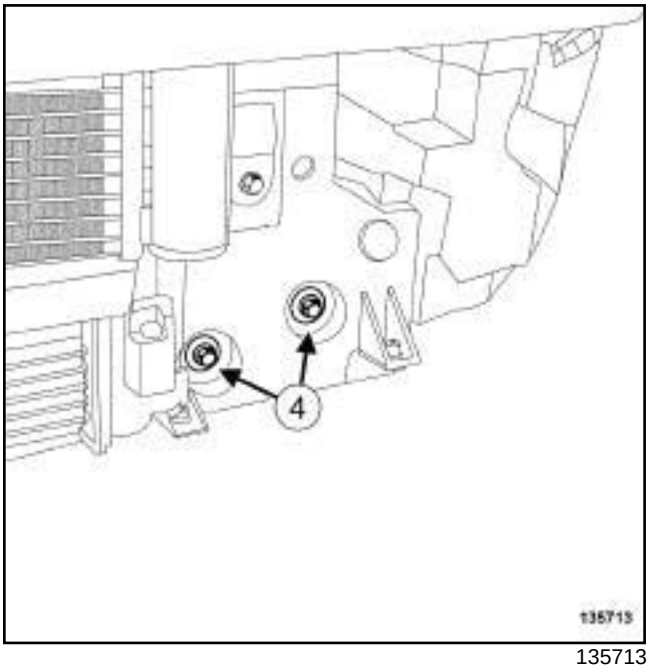

135713

❑ the front end panel lower bolts (**4**) .

❑ Move aside the front end panel.

K4M

II - OPERATION FOR REMOVAL OF PART CONCERNED

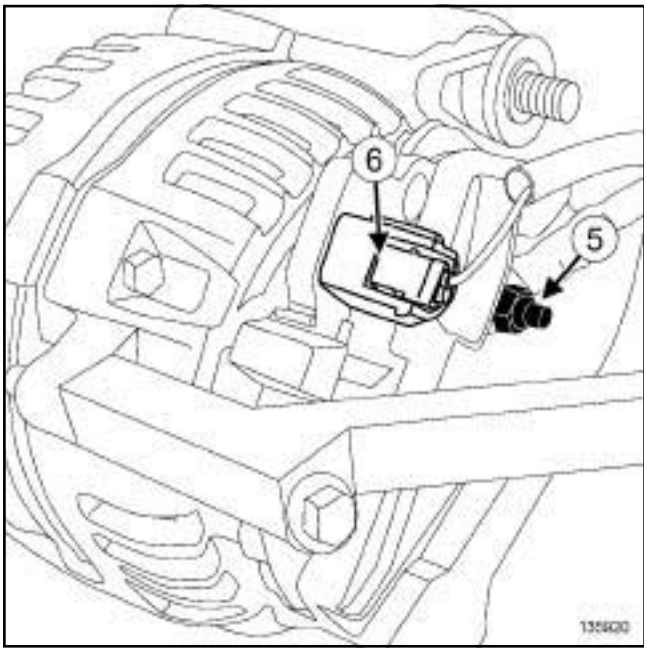

135920

❑ Remove the nut (**5**) on the alternator positive terminal.

❑ Disconnect the alternator connector (**6**) .

❑ Move aside the alternator wiring.

K4M, and 848

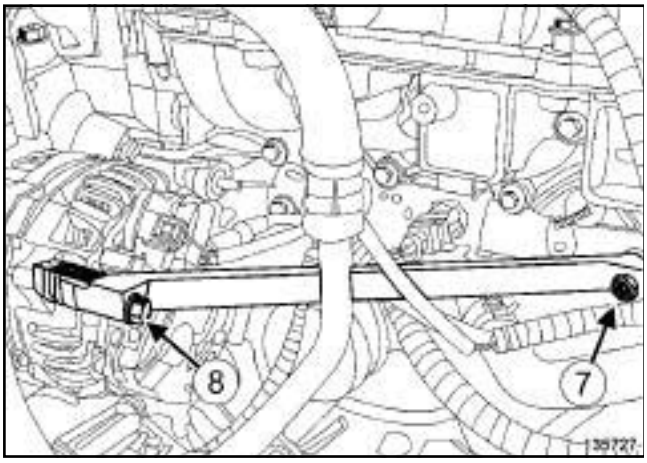

135727

❑ Remove:

- the alternator strut nut (**7**) from the cylinder block,
- the alternator strut bolt (**8**) from the alternator,
- the alternator strut.

K4M, and 858 or 866

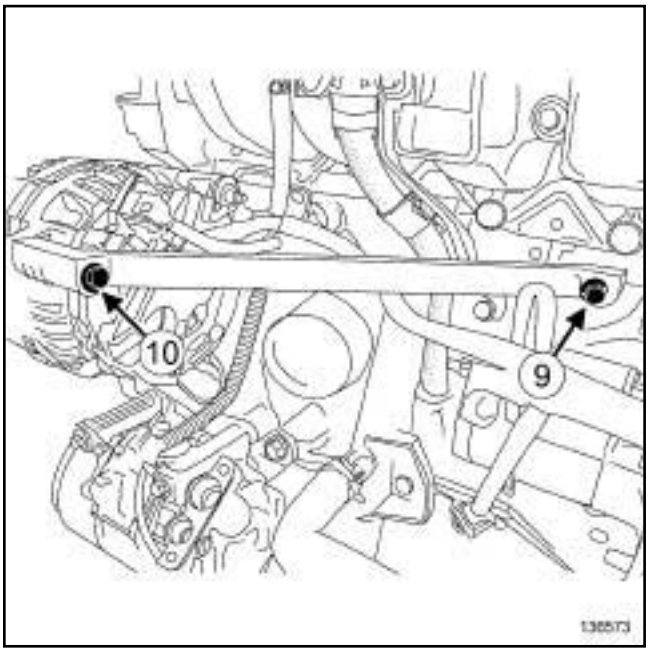

136573

❑ Remove:

- the alternator strut bolt (**9**) from the cylinder block,
- the alternator strut bolt (**10**) from the alternator,
- the alternator strut.

K4M

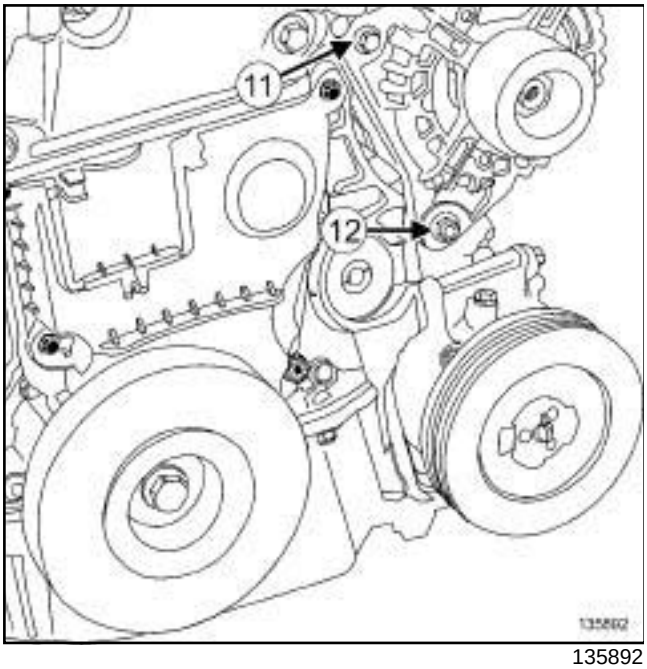

135892

- ❑ Remove the alternator bolt (**11**) .
- ❑ Loosen but do not remove the alternator bolt (**12**) .
- ❑ Move the alternator away from the multifunction support using a screwdriver.
- ❑ Remove the alternator.

REFITTING

I - REFITTING PREPARATION OPERATION

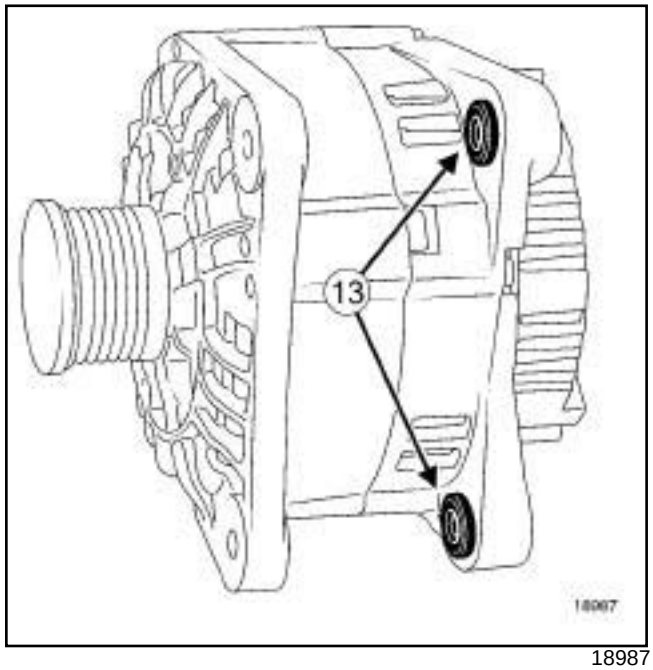

18987

- ❑ Compress the alternator rings (**13**) using pliers or a vice to facilitate fitting.

II - REFITTING OPERATION FOR PART CONCERNED

- ❑ Refit the alternator.
- ❑ Torque tighten the **alternator bolts (25 N.m)**.
- ❑ Refit the alternator strut.

K4M, and 848

- ❑ Refit:
  - the alternator strut nut on the cylinder block,
  - the alternator strut bolt on the alternator.
- ❑ Tighten to torque:
  - the **alternator strut bolt on the alternator (25 N.m)**,
  - the **alternator strut nut on the cylinder block (25 N.m)**.

K4M

K4M, and 858 or 866

❑ Refit:

- the alternator strut bolt on the cylinder block,
- the alternator strut bolt on the alternator.

❑ Tighten to torque:

- the **alternator strut bolt on the alternator (25 N.m)**,
- the **alternator strut bolt on the cylinder block (25 N.m)**.

❑ Position the wiring on the alternator.

❑ Attach the connector to the alternator.

❑ Refit the wiring on the alternator positive terminal.

❑ Torque tighten the **nut for the positive terminal of the alternator (21 N.m)**.

III - FINAL OPERATION

K4M, and 858 or 866

❑ Fit the front end panel.

❑ Refit:

- the upper bolts on the front end panel,
- the lower bolts on the front end panel,
- the upper clips on the front end panel.

❑ Clip the hoses on the cooling fan assembly.

❑ Refit:

- the engine wiring channel on the cooling fan assembly,
- the bonnet catch (see **Bonnet latch: Removal - Refitting**) (52A, Non-side opening element mechanisms),
- the front impact cross member (see **Front impact cross member: Removal - Refitting**) (41A, Front lower structure),
- the audible warning (see **Horn: Removal - Refitting**) (82B, Horn),
- the front bumper mountings (see **Front bumper support: Removal - Refitting**) (42A, Front upper structure),
- the headlights (see **Front headlight: Removal - Refitting**) (80B, Headlights),
- the air deflectors,
- the front bumper (see **Front bumper: Removal - Refitting**) (55A, Exterior protection).

K4M, and 848

❑ Refit the oil filter (see **10A**, **Engine and cylinder block assembly**, **Oil filter: Removal - Refitting**, page **10A-48**) .

❑ Connect the connector of the air temperature sensor on the intake manifold.

❑ Refit:

- the accessories belt (see **11A**, **Top and front of engine**, **Accessories belt: Removal - Refitting**, page **11A-7**) ,
- the engine undertray.

K4M, and 858 or 866

❑ Refit:

- the front section of the front wheel arch liners (see **Front wheel arch liner: Removal - Refitting**) (55A, Exterior protection),
- the front wheels (see **Wheel: Removal - Refitting**) (35A, Wheels and tyres).

K4M, and 848

❑ Refit:

- the front section of the front right-hand wheel arch liner (see **Front wheel arch liner: Removal - Refitting**) (55A, Exterior protection),
- the front right-hand wheel (see **Wheel: Removal - Refitting**) (35A, Wheels and tyres).

❑ Refit the engine cover.

❑ Connect the battery (see **Battery: Removal - Refitting**) (80A, Battery).

K9K

Tightening torques ▽	
alternator bolts	**25 N.m**
alternator positive terminal nut	**8 N.m**

IMPORTANT
Wear protective gloves during the operation.

REMOVAL

I - REMOVAL PREPARATION OPERATION

❑ Position the vehicle on a two-post lift (see **Vehicle: Towing and lifting**) (02A, Lifting equipment).

❑ Disconnect the battery (see **Battery: Removal - Refitting**) (80A, Battery).

❑ Remove:

- the engine cover,
- the front wheels (see **Wheel: Removal - Refitting**) (35A, Wheels and tyres),
- the front section of the front wheel arch liners (see **Front wheel arch liner: Removal - Refitting**) (55A, Exterior protection),
- the engine undertray bolts,
- the engine undertray,
- the accessories belt (see **11A**, **Top and front of engine**, **Accessories belt: Removal - Refitting**, page **11A-7**) ,
- the front bumper (see **Front bumper: Removal - Refitting**) (55A, Exterior protection),
- the turbocharger air outlet pipe (see **12B**, **Turbocharging**, **Intercooler air inlet pipe: Removal - Refitting**, page **12B-41**) ,
- the headlights (see **Front headlight: Removal - Refitting**) (80B, Headlights),
- the front bumper mountings (see **Front bumper support: Removal - Refitting**) (42A, Front upper structure),
- the top air deflector of the cooling radiator,
- the side air deflectors of the cooling radiator,
- the audible warning (see **Horn: Removal - Refitting**) (82B, Horn),
- the front impact cross member (see **Front impact cross member: Removal - Refitting**) (41A, Front lower structure),
- the bonnet catch (see **Bonnet latch: Removal - Refitting**) (52A, Non-side opening element mechanisms).

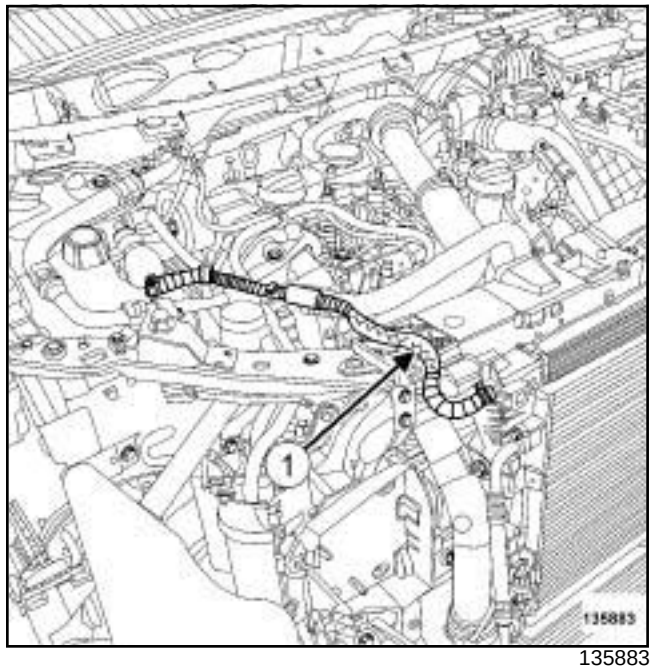

135883

❑ Unclip the expansion bottle top hose (**1**) from the front end panel.

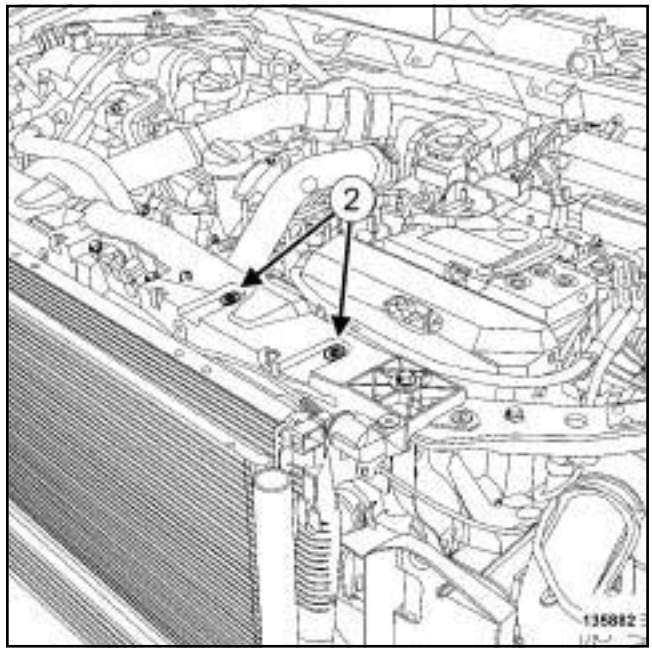

135882

❑ Remove the engine wiring channel bolts (**2**) from the front end panel.

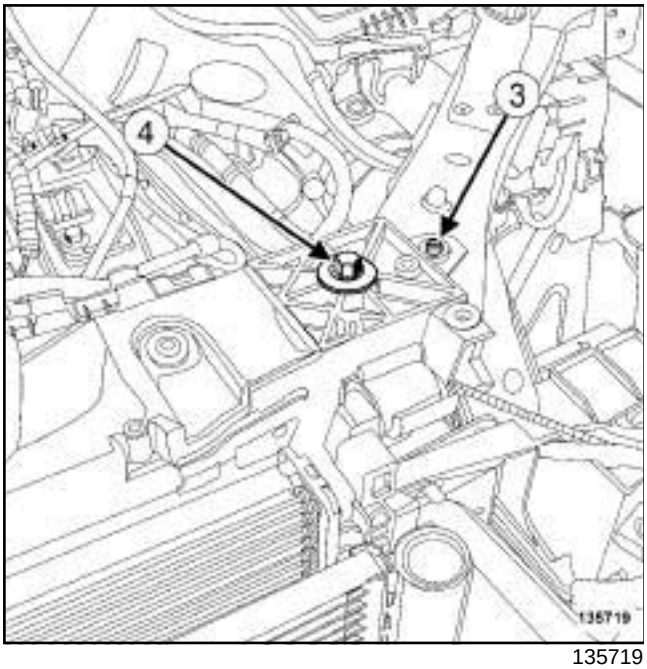

135719

❑ Remove:

- the front end panel clips (**3**) ,
- the front end panel upper bolts (**4**) .

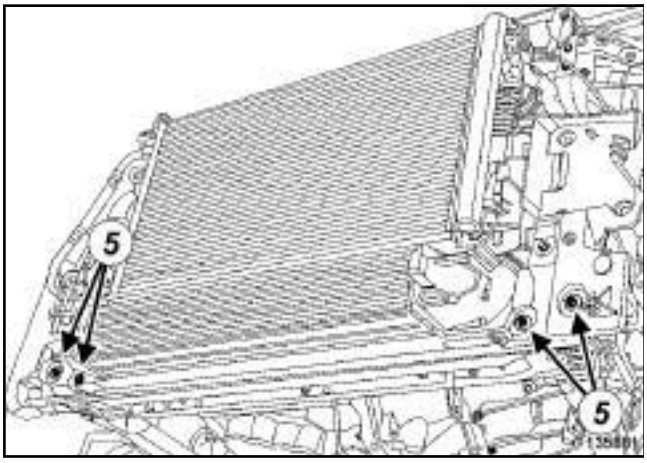

135881

❑ Remove the lower bolts (**5**) from the front end panel.

❑ Tilt the front end panel towards the front of the vehicle.

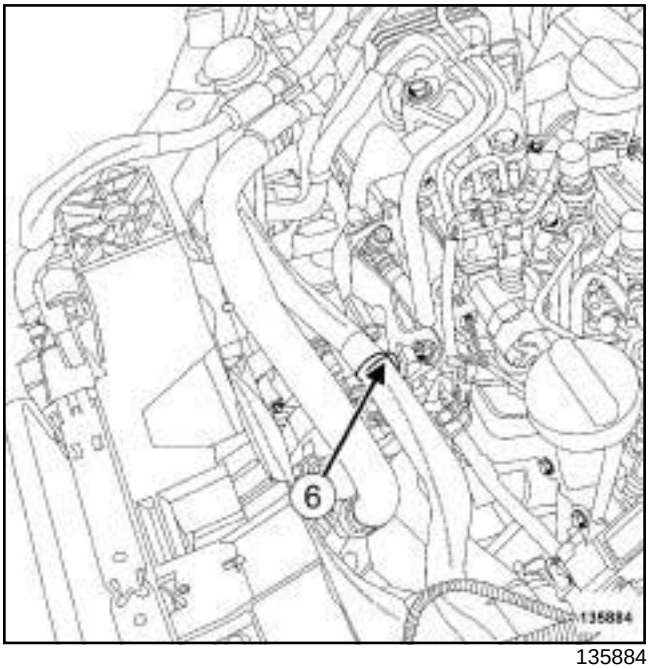

135884

❑ Unclip the expansion bottle bottom cooling hose (**6**) from the high pressure pump protector.

❑ Unclip the alternator wiring from the injector rail protector.

II - OPERATION FOR REMOVAL OF PART CONCERNED

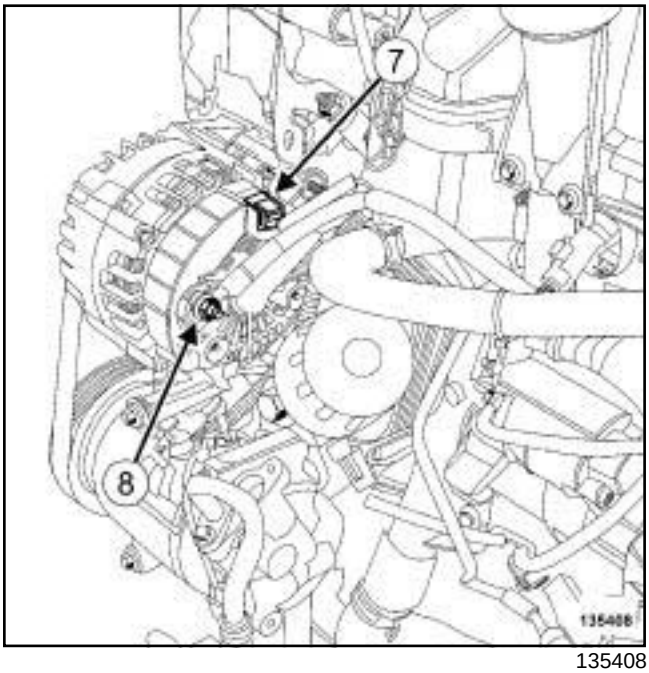

135408

❑ Disconnect the alternator excitation connector (**7**) .

❑ Remove the nut (**8**) from the alternator positive terminal.

❑ Move aside the alternator wiring.

K9K

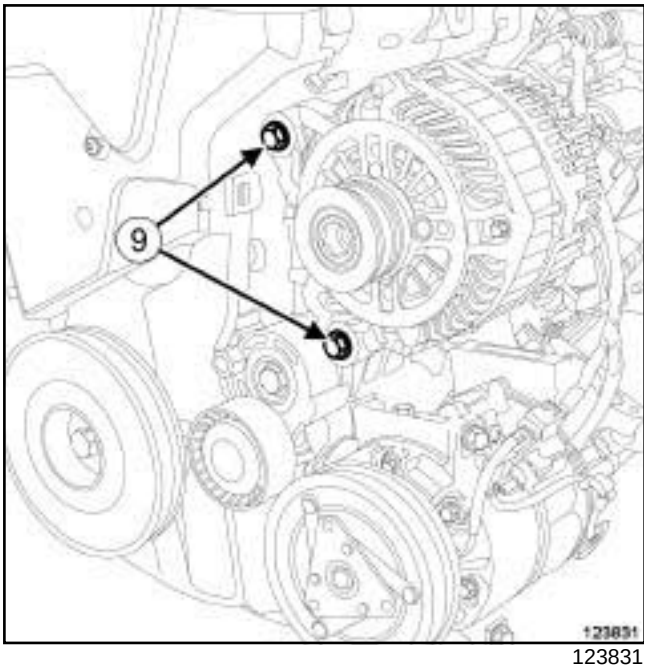

123831

- ❑ Undo the alternator bolts (**9**) .
- ❑ Remove the alternator bolts (**9**) as far as possible.
- ❑ Move the alternator away from the multifunction support using a screwdriver.
- ❑ Remove the alternator with its bolts.

REFITTING

I - REFITTING PREPARATION OPERATION

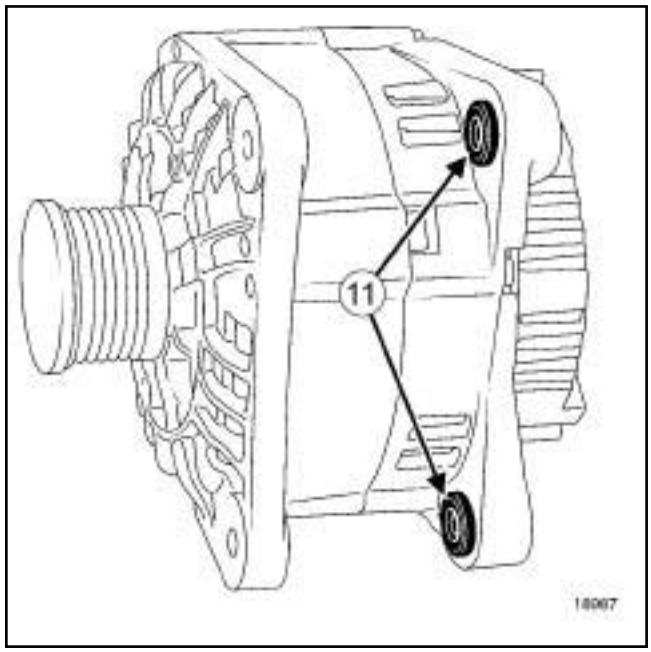

18987

- ❑ Compress the alternator rings (**11**) using pliers and a vice to facilitate fitting.

II - REFITTING OPERATION FOR PART CONCERNED

- ❑ Refit the alternator equipped with its bolts.
- ❑ Torque tighten the **alternator bolts (25 N.m)**.
- ❑ Position the alternator wiring.
- ❑ Refit the alternator positive terminal nut.
- ❑ Torque tighten the **alternator positive terminal nut (8 N.m)**.
- ❑ Connect the alternator excitation connector.

III - FINAL OPERATION

- ❑ Clip:
  - the alternator wiring on the injector rail protector,
  - the expansion bottle bottom cooling hose on the high pressure pump protector.
- ❑ Fit the front end panel.
- ❑ Refit:
  - the lower bolts from the front end panel,
  - the front end panel upper bolts,
  - the front end panel clips.

- the bolts of the engine cooling fan assembly wiring channel on the front end panel.

❏ Clip the expansion bottle top hose onto the front end panel.

❏ Refit:

- the bonnet catch (see **Bonnet latch: Removal - Refitting**) (52A, Non-side opening element mechanisms),
- the front impact cross member (see **Front impact cross member: Removal - Refitting**) (41A, Front lower structure),
- the audible warning (see **Horn: Removal - Refitting**) (82B, Horn),
- the side air deflectors of the cooling radiator,
- the top air deflector of the cooling radiator,
- the front bumper mountings (see **Front bumper support: Removal - Refitting**) (42A, Front upper structure).
- the headlights (see **Front headlight: Removal - Refitting**) (80B, Headlights),
- the turbocharger air outlet pipe (see **12B**, **Turbocharging**, **Intercooler air inlet pipe: Removal - Refitting**, page **12B-41**) ,
- the front bumper (see **Front bumper: Removal - Refitting**) (55A, Exterior protection),
- the accessories belt (see **11A**, **Top and front of engine**, **Accessories belt: Removal - Refitting**, page **11A-7**) ,
- the engine undertray,
- the front section of the front wheel arch liners (see **Front wheel arch liner: Removal - Refitting**) (55A, Exterior protection),
- the front wheels (see **Wheel: Removal - Refitting**) (35A, Wheels and tyres),
- the engine cover.

❏ Connect the battery (see **Battery : Removal - Refitting**) (80A, Battery).

F9Q

Tightening torques ▽	
alternator bolts	**25 N.m**
alternator positive terminal nut	**24 N.m**

REMOVAL

I - REMOVAL PREPARATION OPERATION

❏ Position the vehicle on a two-post lift (see **Vehicle: Towing and lifting**) (02A, Lifting equipment).

❏ Disconnect the battery (see **Battery: Removal - Refitting**) (80A, Battery).

❏ Remove:

- the engine cover,
- the engine undertray bolts,
- the engine undertray,
- the front wheels (see **Wheel: Removal - Refitting**) (35A, Wheels and tyres),
- the front section of the front wheel arch liners (see **Front wheel arch liner: Removal - Refitting**) (55A, Exterior protection),
- the front bumper (see **Front bumper: Removal - Refitting**) (55A, Exterior protection),
- the front impact cross member (see **Front impact cross member: Removal - Refitting**) (41A, Front lower structure),
- the cooling radiator air deflectors.
- the headlights (see **Front headlight: Removal - Refitting**) (80B, Headlights),
- the front bumper mountings (see **Front bumper support: Removal - Refitting**) (42A, Front upper structure),
- the accessories belt (see **11A**, **Top and front of engine**, **Accessories belt: Removal - Refitting**, page **11A-7**) .

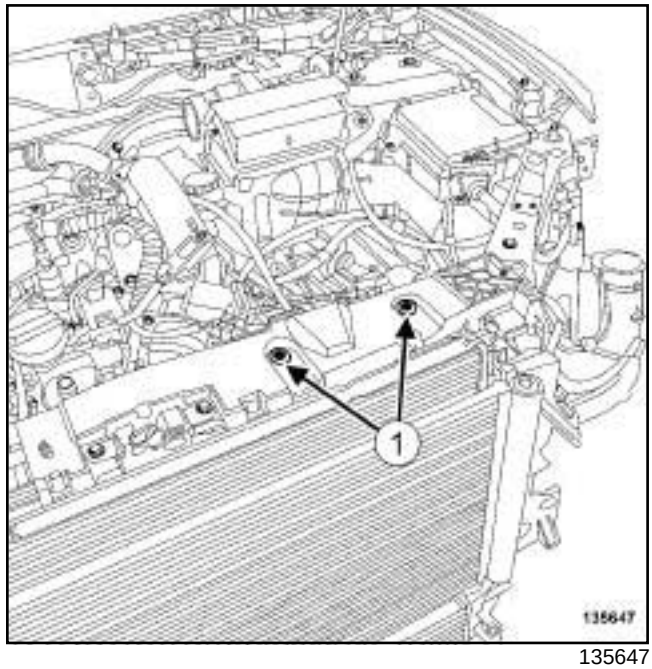

135647

❏ Remove:

- the bolts (**1**) of the engine wiring channel,
- the bonnet catch (see **Bonnet latch: Removal - Refitting**) (52A, Non-side opening element mechanisms).

F9Q

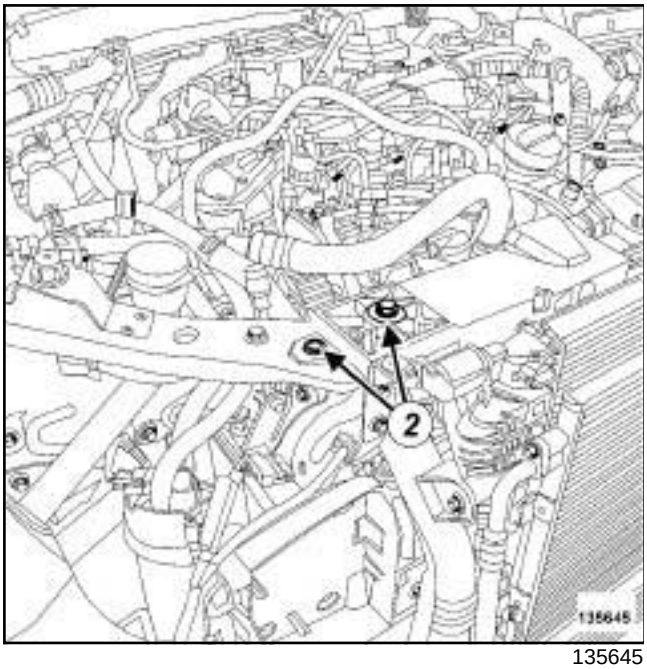

135645

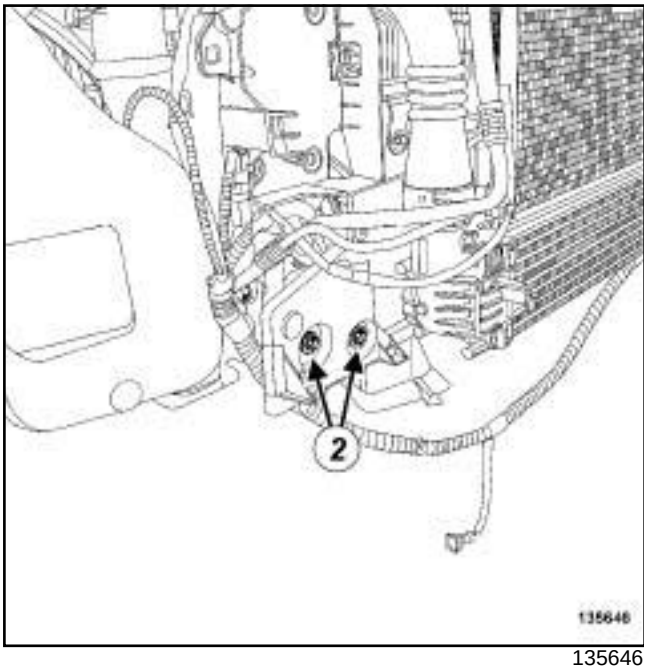

135646

❑ Remove the front end panel bolts (**2**) .

❑ Tilt the front end panel.

❑ Remove the intercooler air outlet pipe (see **12B**, **Turbocharging**, **Intercooler air outlet pipe: Removal - Refitting**, page **12B-56**) .

II - OPERATION FOR REMOVAL OF PART CONCERNED

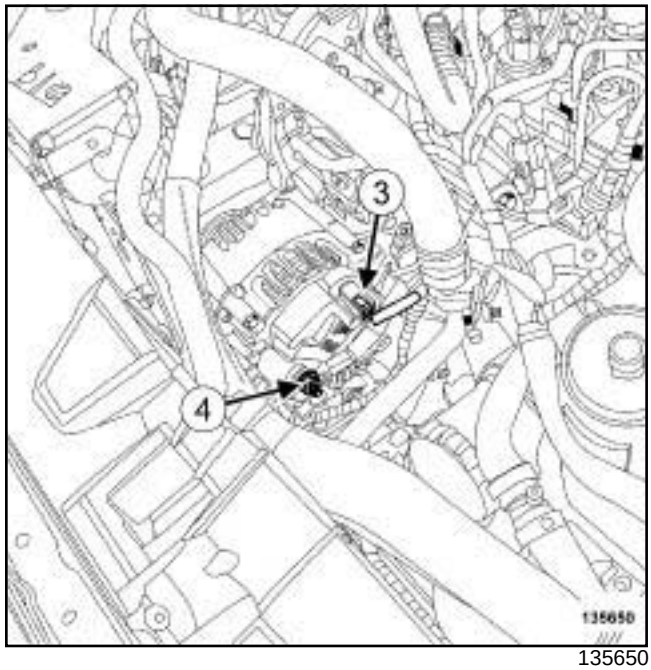

135650

❑ Disconnect the connector (**3**) from the alternator regulator.

❑ Remove the nut (**4**) from the alternator positive terminal.

❑ Move aside the alternator wiring.

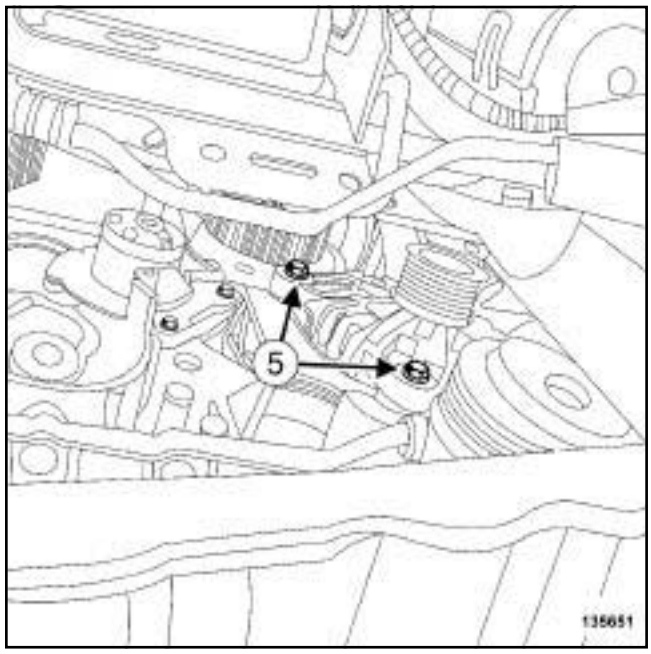

135651

❑ Remove:

- the alternator bolts (**5**) ,

- the alternator.

F9Q

REFITTING

I - REFITTING PREPARATION OPERATION

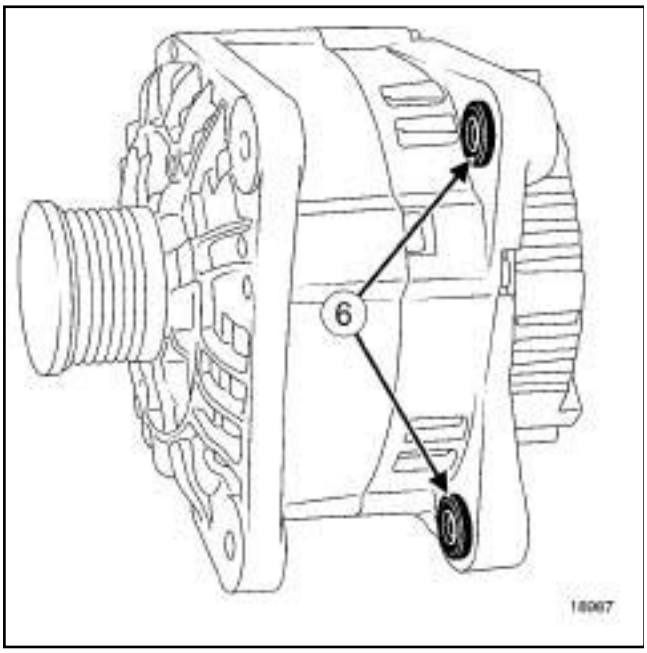

18987

❑ Compress the alternator rings (**6**) using pliers or a vice to facilitate fitting.

II - REFITTING OPERATION FOR PART CONCERNED

❑ Refit the alternator.

❑ Torque tighten the **alternator bolts (25 N.m)**.

❑ Position the alternator wiring.

❑ Torque tighten the **alternator positive terminal nut (24 N.m)**.

❑ Connect the alternator regulator connector.

III - FINAL OPERATION

❑ Refit a new intercooler air outlet pipe (see **12B**, **Turbocharging**, **Intercooler air outlet pipe: Removal - Refitting**, page **12B-56**) .

❑ Refit:

- the front panel,
- the bonnet catch (see **Bonnet latch: Removal - Refitting**) (52A, Non-side opening element mechanisms),
- the bolts for the engine wiring harness channel,
- the accessories belt (see **11A**, **Top and front of engine**, **Accessories belt: Removal - Refitting**, page **11A-7**) ,
- the front bumper mountings (see **Front bumper support: Removal - Refitting**) (42A, Front upper structure),
- the front impact cross member (see **Front impact cross member: Removal - Refitting**) (41A, Front lower structure),
- the headlights (see **Front headlight: Removal - Refitting**) (80B, Headlights),
- the front bumper (see **Front bumper: Removal - Refitting**) (55A, Exterior protection),
- the front section of the front wheel arch liners (see **Front wheel arch liner: Removal - Refitting**) (55A, Exterior protection),
- the front wheels (see **Wheel: Removal - Refitting**) (35A, Wheels and tyres),
- the engine undertray,
- the engine cover.

❑ Connect the battery (see **Battery : Removal - Refitting**) (80A, Battery).

F4R

Tightening torques ▽	
alternator bolts	**25 N.m**
alternator positive terminal nut	**8 N.m**

IMPORTANT
Wear protective gloves during the operation.

REMOVAL

I - REMOVAL PREPARATION OPERATION

❑ Position the vehicle on a two-post lift (see **Vehicle: Towing and lifting**) (02A, Lifting equipment).

❑ Disconnect the battery (see **Battery: Removal - Refitting**) (80A, Battery).

❑ Remove:

- the engine cover,
- the engine undertray bolts,
- the engine undertray,
- the front wheels (see **Wheel: Removal - Refitting**) (35A, Wheels and tyres),
- the front section of the front wheel arch liners (see **Front wheel arch liner: Removal - Refitting**) (55A, Exterior protection),
- the front bumper (see **Front bumper: Removal - Refitting**) (55A, Exterior protection),
- the upper air deflector,
- the side air deflectors,
- the accessories belt (see **11A**, **Top and front of engine**, **Accessories belt: Removal - Refitting**, page **11A-7**) ,
- the headlights (see **Front headlight: Removal - Refitting**) (80B, Headlights),
- the front bumper mountings (see **Front bumper support: Removal - Refitting**) (42A, Front upper structure),
- the audible warning (see **Horn: Removal - Refitting**) (82B, Horn),
- the front impact cross member (see **Front impact cross member: Removal - Refitting**) (41A, Front lower structure),
- the bonnet catch (see **Bonnet latch: Removal - Refitting**) (52A, Non-side opening element mechanisms).

❑ Unclip the cooling system degassing hose.

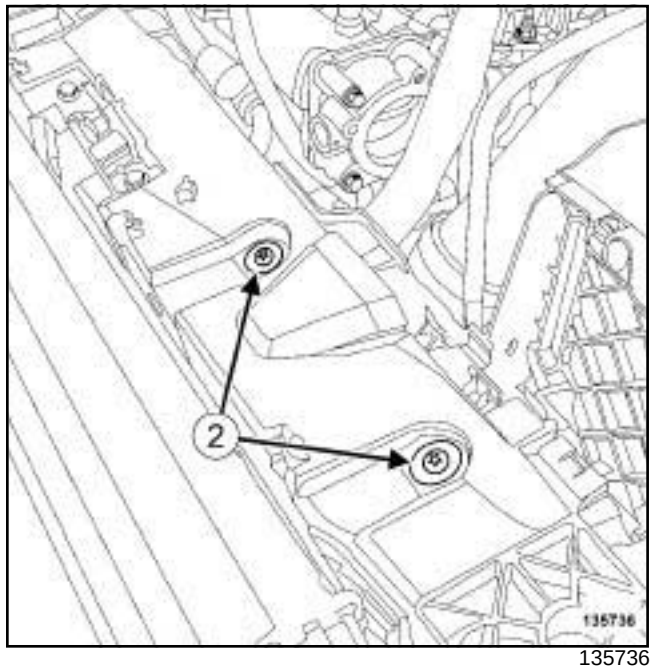

135736

❑ Remove the bolts (**2**) of the wiring channel from the engine cooling fan assembly.

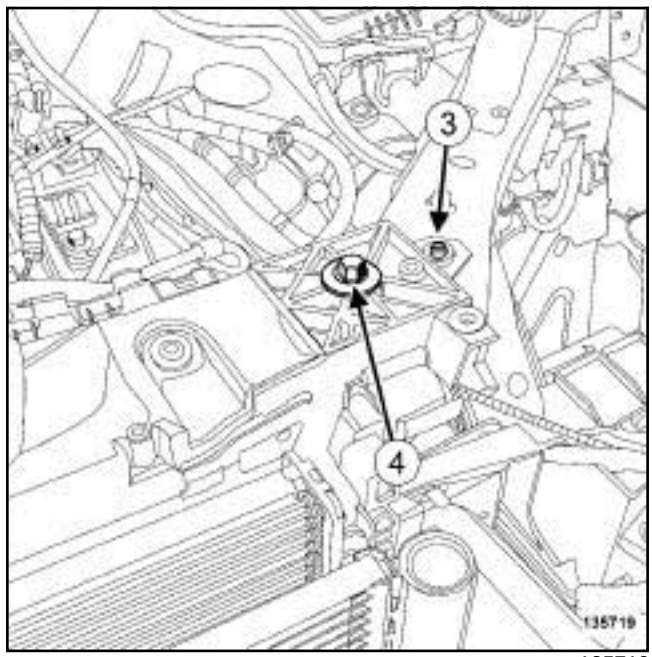

135719

❑ Remove:

- the upper bolts (**3**) from the front end panel,
- the front end panel clips (**4**) .

F4R

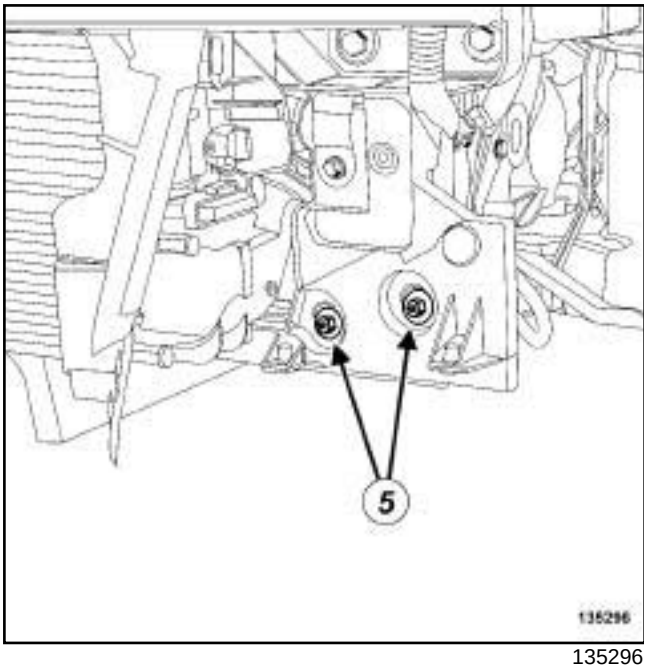

135296

- ❑ Remove the lower bolts (**5**) from the front end panel.
- ❑ Tilt the front end panel slightly towards the front of the vehicle.
- ❑ Remove the intercooler air outlet pipe (see **12B**, **Turbocharging**, **Intercooler air outlet pipe: Removal - Refitting**, page **12B-56**) .

II - OPERATION FOR REMOVAL OF PART CONCERNED

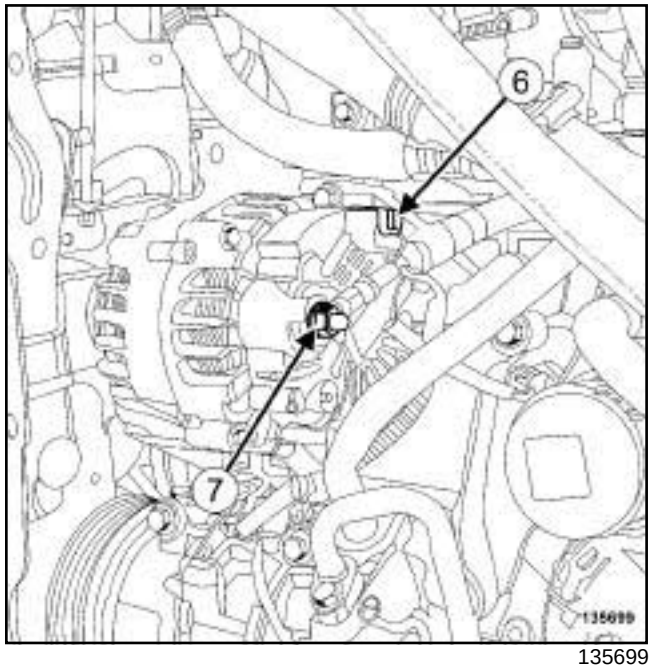

135699

- ❑ Disconnect the alternator connector (**6**) .
- ❑ Remove the nut (**7**) on the alternator positive terminal.
- ❑ Move aside the alternator wiring.

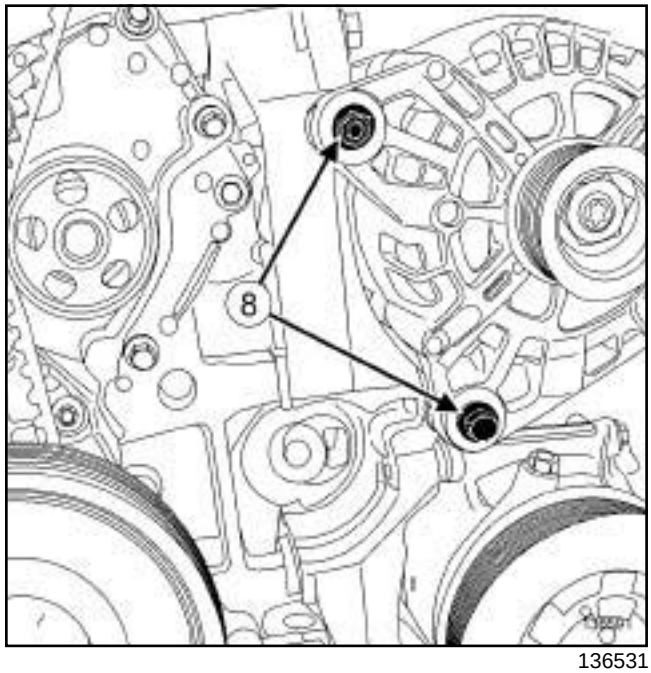

136531

- ❑ Remove:
  - the alternator bolts (**8**) ,
  - the alternator.
- ❑ Move the alternator away from the multifunction support using a screwdriver.

F4R

REFITTING

I - REFITTING PREPARATION OPERATION

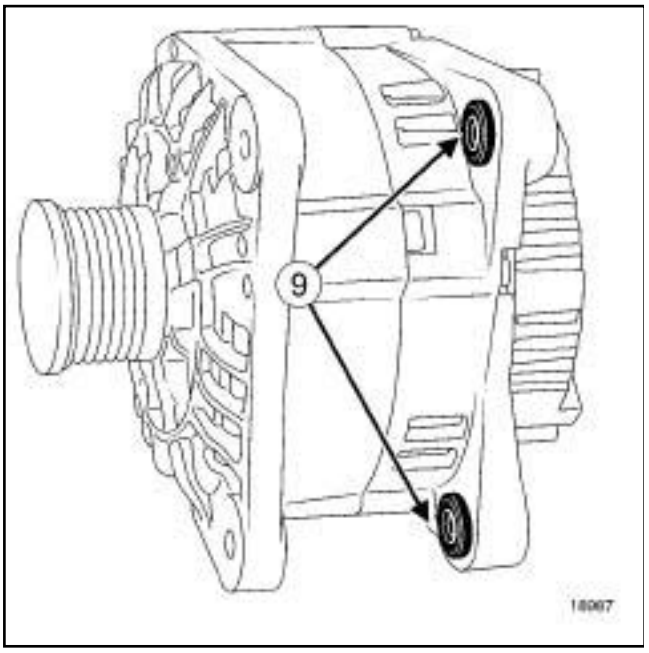

18987

❑ Compress the alternator rings (**9**) using pliers or a vice to facilitate fitting.

II - REFITTING OPERATION FOR PART CONCERNED

❑ Refit the alternator.

❑ Torque tighten the **alternator bolts (25 N.m)**.

❑ Position the alternator wiring.

❑ Torque tighten the **alternator positive terminal nut (8 N.m)**.

❑ Connect the alternator connector.

III - FINAL OPERATION

❑ Refit the intercooler air outlet pipe (see **12B**, **Turbocharging**, **Intercooler air outlet pipe: Removal - Refitting**, page **12B-56**) .

❑ Fit the front end panel.

❑ Tighten the front end panel bolts.

❑ Refit the front end panel clips.

❑ Clip on the expansion bottle degassing hose.

❑ Refit:

- the bolts of the wiring channel of the engine cooling fan assembly,
- the bonnet catch (see **Front bumper support: Removal - Refitting**) (52A, Non-side opening element mechanisms),
- the audible warning (see **Horn: Removal - Refitting**) (82B, Horn),
- the front impact cross member (see **Front impact cross member: Removal - Refitting**) (41A, Front lower structure),
- the front bumper mountings (see **Front bumper support: Removal - Refitting**) (42A, Front upper structure),
- the headlights (see **Front headlight: Removal - Refitting**) (80B, Headlights),
- the accessories belt (see **11A**, **Top and front of engine**, **Accessories belt: Removal - Refitting**, page **11A-7**) ,
- the side air deflectors,
- the upper air deflector,
- the front bumper (see **Front bumper: Removal - Refitting**) (55A, Exterior protection),
- the front section of the front wheel arch liners (see **Front wheel arch liner: Removal - Refitting**) (55A, Exterior protection),
- the front wheels (see **Wheel: Removal - Refitting**) (35A, Wheels and tyres),
- the engine undertray,
- the engine cover.

❑ Connect the battery (see **Battery : Removal - Refitting**) (80A, Battery).

K4M, and 848

Tightening torques ▽	
starter supply wiring nut	**8 N.m**
starter excitation wiring nut	**5 N.m**
exhaust manifold stay nut on the exhaust manifold	**44 N.m**
exhaust manifold stay bolt on the cylinder block	**44 N.m**
clip on the throttle valve air inlet pipe	**6 N.m**

REMOVAL

I - REMOVAL PREPARATION OPERATION

❑ Position the vehicle on a two-post lift (see **Vehicle: Towing and lifting**) (02A, Lifting equipment).

❑ Disconnect the battery (see **Battery: Removal - Refitting**) (80A, Battery).

❑ Remove the front engine cover.

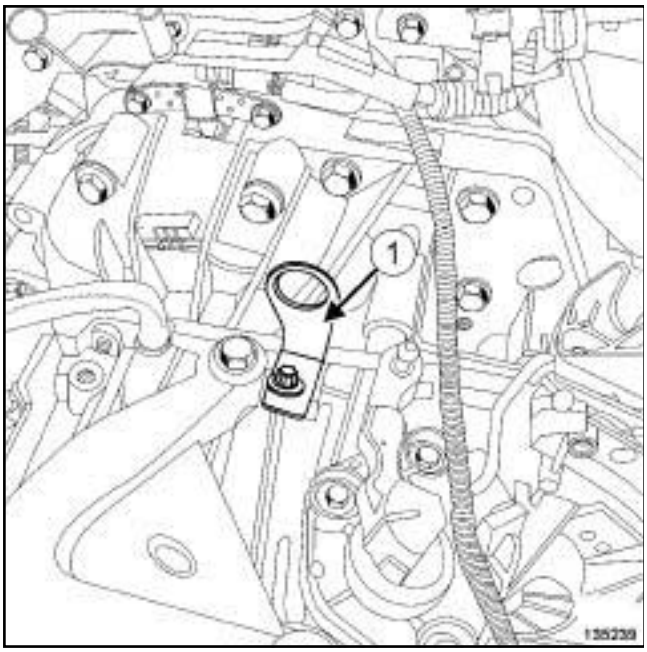

135239

❑ Loosen the clip on the throttle valve air inlet pipe.

❑ Disconnect the air outlet pipe from the air filter unit.

❑ Remove:

- the air outlet pipe to the air filter unit,
- the gearbox lifting eye (**1**) ,
- the engine undertray bolts,
- the engine undertray,

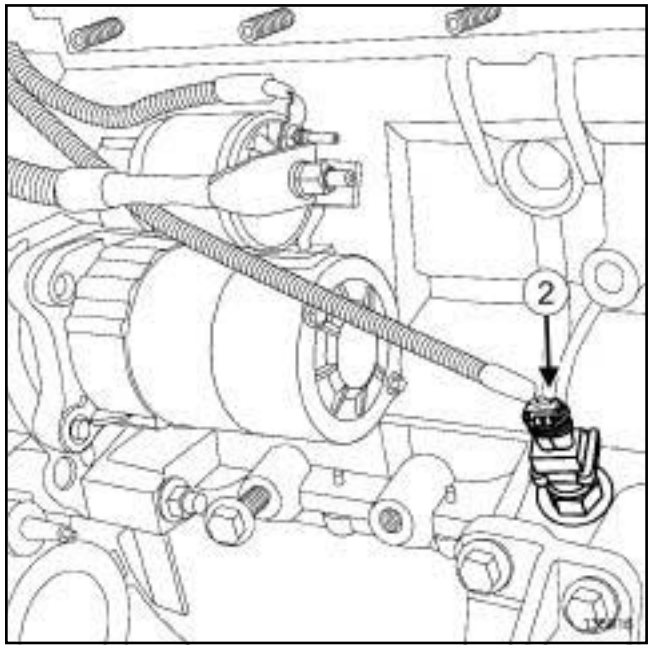

135916

❑ Disconnect the connector (**2**) from the oil level sensor.

❑ Move aside the wiring of the oil level sensor.

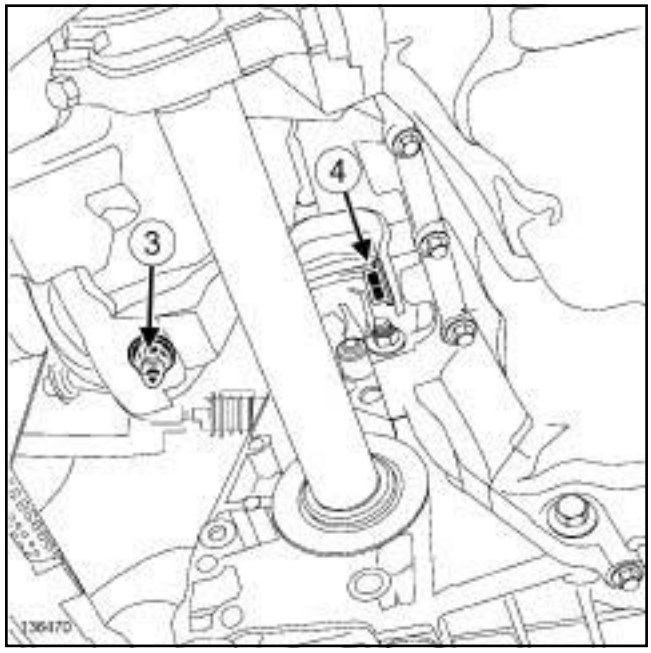

136470

❑ Remove:

- the exhaust manifold strut nut (**3**) from the exhaust manifold,
- the exhaust manifold strut bolt (**4**) from the cylinder block,

K4M, and 848

- the exhaust manifold strut.

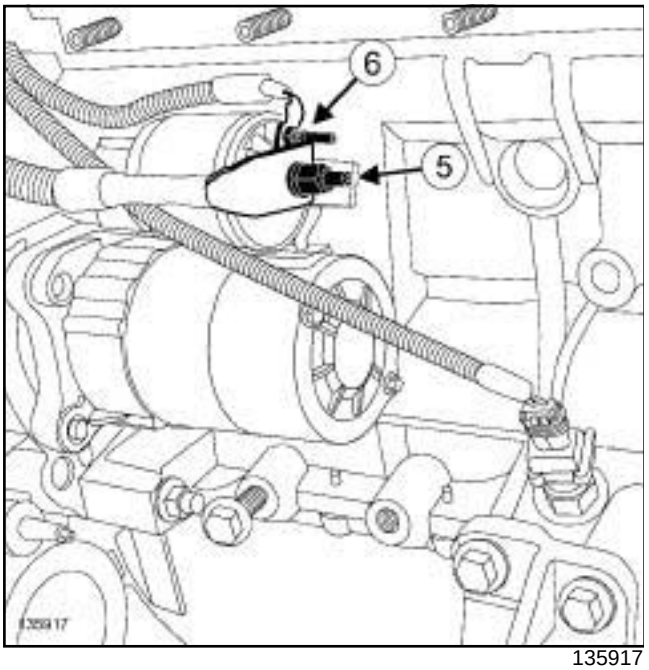

135917

❑ Remove:

- the starter feed wiring nut (**5**) ,
- the starter excitation wiring nut (**6**) .

❑ Move the starter wiring aside.

II - OPERATION FOR REMOVAL OF PART CONCERNED

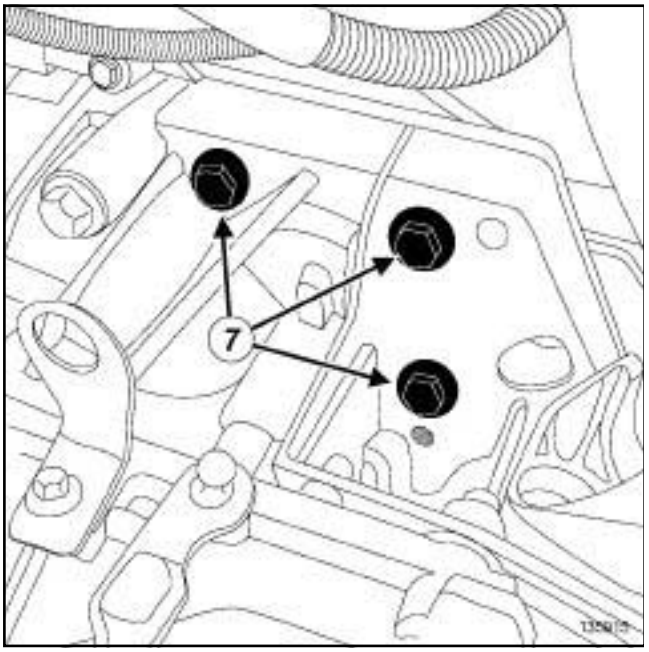

135915

❑ Remove:

- the starter bolts (**7**) ,
- the starter.

REFITTING

I - REFITTING PREPARATION OPERATION

❑ Check that the centring dowel is in place.

II - REFITTING OPERATION FOR PART CONCERNED

❑ Refit the starter.

III - FINAL OPERATION

❑ Fit the starter wiring.

❑ Tighten to torque:

- the **starter supply wiring nut (8 N.m)**,
- the **starter excitation wiring nut (5 N.m)**.

❑ Refit the exhaust manifold stay.

❑ Tighten to torque:

- the **exhaust manifold stay nut on the exhaust manifold (44 N.m)**,
- the **exhaust manifold stay bolt on the cylinder block (44 N.m)**.

❑ Fit the oil level sensor wiring.

❑ Connect the connector to the oil level sensor.

❑ Refit:

- the engine undertray,
- the gearbox lifting eye,
- the air outlet pipe of the air filter unit.

❑ Connect the air outlet pipe of the air filter unit.

❑ Torque tighten the **clip on the throttle valve air inlet pipe (6 N.m)**.

❑ Refit the engine cover.

❑ Connect the battery (see **Battery: Removal - Refitting**) (80A, Battery).

K9K

Tightening torques ▽	
starter bolts	**44 N.m**
starter supply terminal nut	**8 N.m**
nut on the starter solenoid	**5 N.m**

REMOVAL

I - REMOVAL PREPARATION OPERATION

❑ Position the vehicle on a two-post lift (see **Vehicle: Towing and lifting**) (02A, Lifting equipment).

❑ Remove:

- the engine cover,
- the engine undertray bolts,
- the engine undertray.

❑ Disconnect the battery (see **Battery: Removal - Refitting**) (80A, Battery).

❑ Remove the intercooler air outlet pipe (see **12B**, **Turbocharging**, **Intercooler air outlet pipe: Removal - Refitting**, page **12B-56**) .

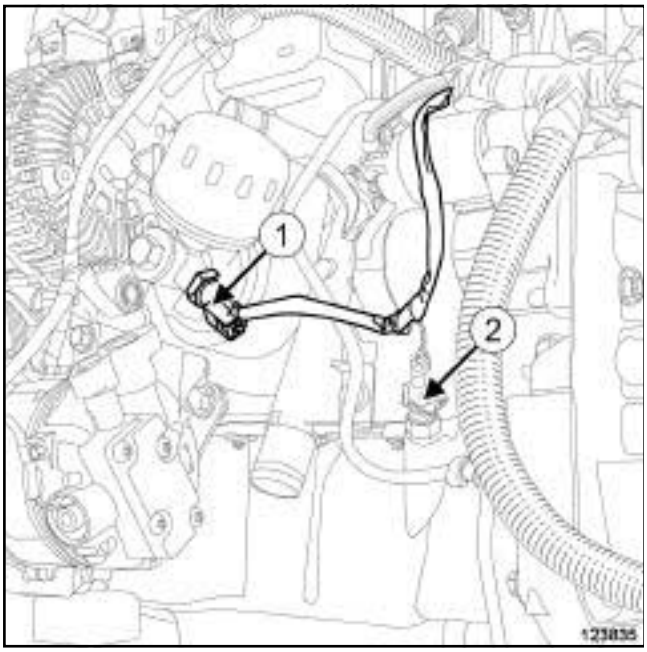

123835

❑ Disconnect:

- the connector (**1**) from the oil pressure sensor,
- the connector (**2**) from the oil level sensor.

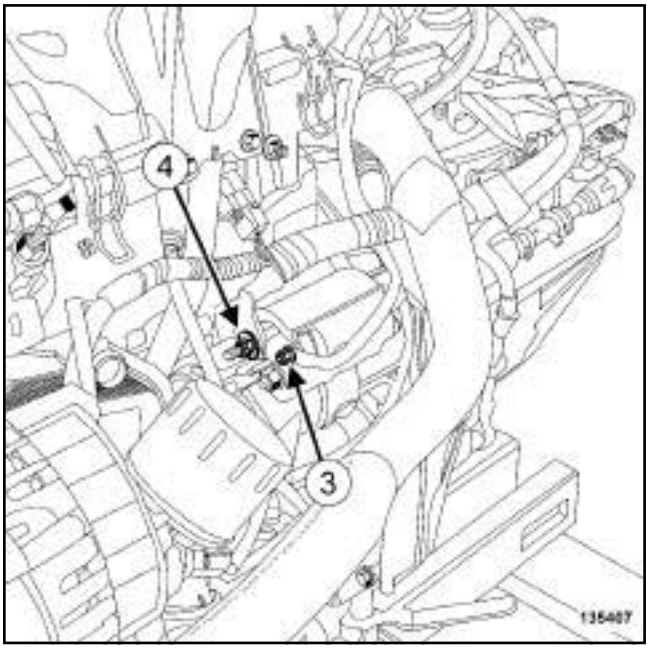

135407

❑ Loosen the nut on the starter solenoid (**3**) .

❑ Remove the nut of the starter supply terminal (**4**) .

❑ Move the starter wiring aside.

II - OPERATION FOR REMOVAL OF PART CONCERNED

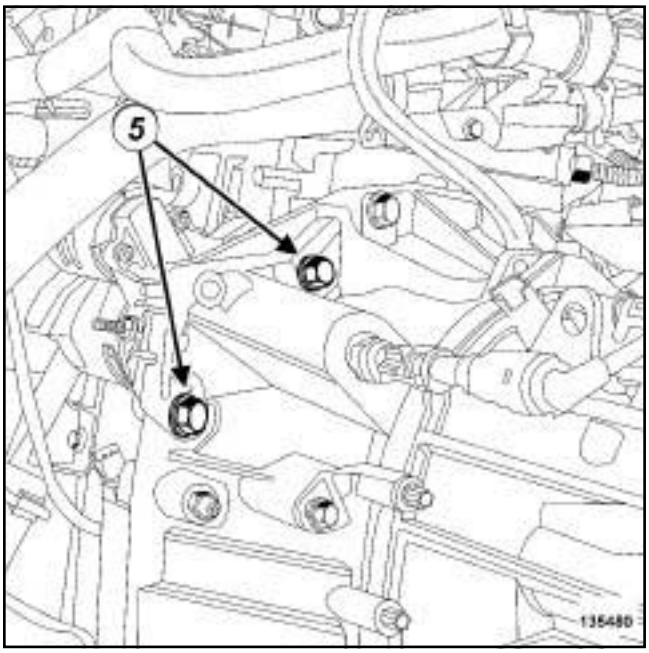

135480

❑ Remove:

- the starter bolts (**5**) ,
- the starter.

K9K

REFITTING

I - REFITTING PREPARATION OPERATION

- When replacing the starter, remove the starter protective shield.
- Refit the starter protective shield on a new starter.
- Check that the starter centring dowel is in place.

II - REFITTING OPERATION FOR PART CONCERNED

- Refit the starter.
- Torque tighten the **starter bolts (44 N.m)**.

III - FINAL OPERATION

- Fit the starter wiring.
- Tighten to torque:
  - the **starter supply terminal nut (8 N.m)**.
  - the **nut on the starter solenoid (5 N.m)**.
- Connect:
  - the oil level sensor connector,
  - the oil pressure sensor connector.
- Refit the intercooler air outlet pipe (see **12B**, **Turbocharging**, **Intercooler air outlet pipe: Removal - Refitting**, page **12B-56**) .
- Connect the battery (see **Battery : Removal - Refitting**) (80A, Battery).
- Refit:
  - the engine undertray,
  - the engine cover.

K4M, and 858 or 866

Tightening torques ▽	
starter bolts	**44 N.m**
starter supply cable nut	**8 N.m**
starter excitation cable nut	**5 N.m**

REMOVAL

❑ Disconnect the battery (see **Battery: Removal - Refitting**) (80A, Battery).

❑ Remove:

- the engine undertray bolts,
- the engine undertray.

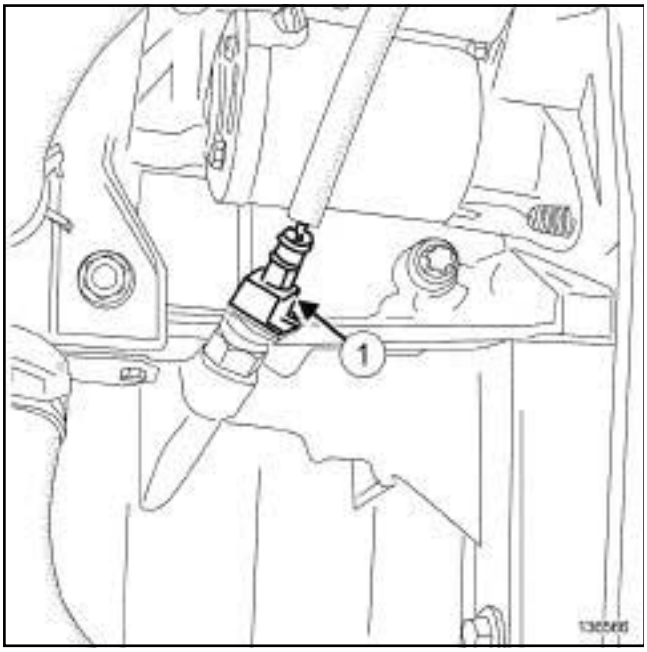

136566

❑ Disconnect the connector (**1**) from the oil level sensor.

OPERATION FOR REMOVAL OF PART CONCERNED

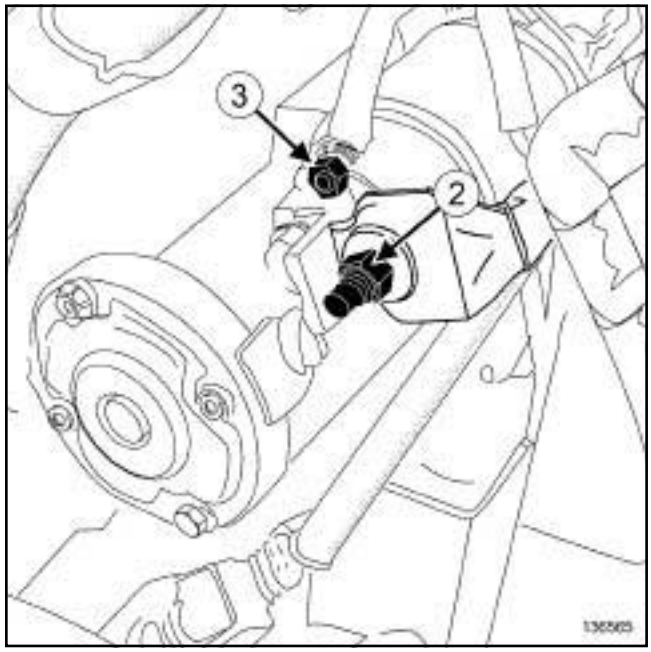

136565

❑ Remove:

- the starter supply cable nut (**2**) ,
- the starter excitation cable nut (**3**) .

❑ Move the starter wiring aside.

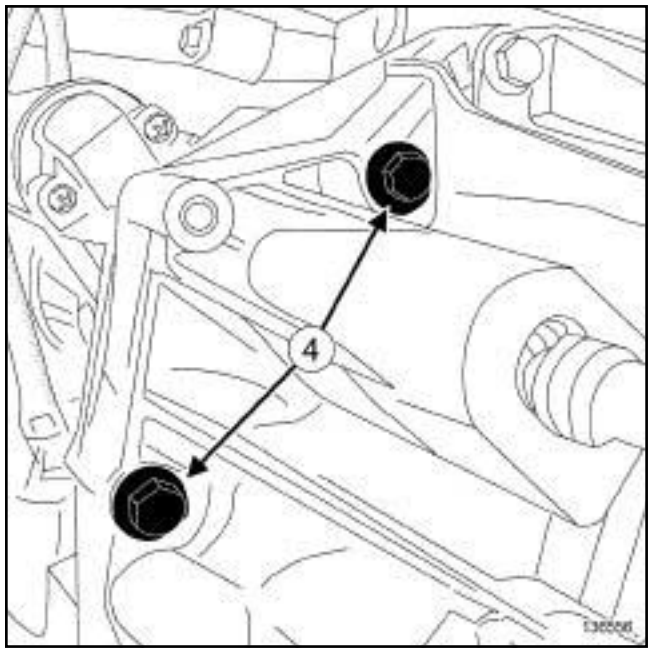

136556

❑ Remove:

- the starter bolts (**4**) ,
- the starter.

K4M, and 858 or 866

REFITTING

I - REFITTING PREPARATION OPERATION

❏ Check that the centring dowel is in place.

II - REFITTING OPERATION FOR PART CONCERNED

❏ Refit the starter.

❏ Torque tighten the **starter bolts (44 N.m)**.

❏ Fit the starter wiring.

❏ Tighten to torque:

- the **starter supply cable nut (8 N.m)**,
- the **starter excitation cable nut (5 N.m)**.

III - FINAL OPERATION

❏ Connect:

- the oil level sensor connector,
- the battery (see **Battery: Removal - Refitting**) (80A, Battery).

❏ Refit the engine undertray.

F9Q

Tightening torques ▽	
starter excitation cable nut	**5 N.m**
starter supply cable nut	**8 N.m**

REMOVAL

I - REMOVAL PREPARATION OPERATION

❑ Position the vehicle on a two-post lift (see **Vehicle: Towing and lifting**) (02A, Lifting equipment).

❑ Remove:

- the engine cover,
- the engine undertray bolts,
- the engine undertray,
- the windscreen wiper arms (see **Windscreen wiper arm: Removal - Refitting**) (85A, Wiping - Washing),
- the scuttle panel grille (see **Scuttle panel grille: Removal - Refitting**) (56A, Exterior equipment),
- the scoop under the scuttle panel grille (see **Scoop under scuttle panel grille: Removal - Refitting**) (56A, Exterior equipment),
- the battery (see **Battery: Removal - Refitting**) (80A, Battery),
- the battery tray (see **Battery tray: Removal - Refitting**) (80A, Battery),
- the intercooler air inlet pipe (see **12B**, **Turbocharging**, **Intercooler air inlet pipe: Removal - Refitting**, page **12B-41**) ,
- the lower engine tie-bar (see **19D**, **Engine mounting**, **Lower engine tie-bar: Removal - Refitting**, page **19D-33**) ,
- the turbocharger outlet exhaust gas duct (see **12B**, **Turbocharging**, **Turbocharger outlet exhaust gas duct: Removal - Refitting**, page **12B-49**) .

II - OPERATION FOR REMOVAL OF PART CONCERNED

❑ Remove:

- the starter supply cable nut,
- the starter excitation cable nut.

❑ Move the starter wiring aside.

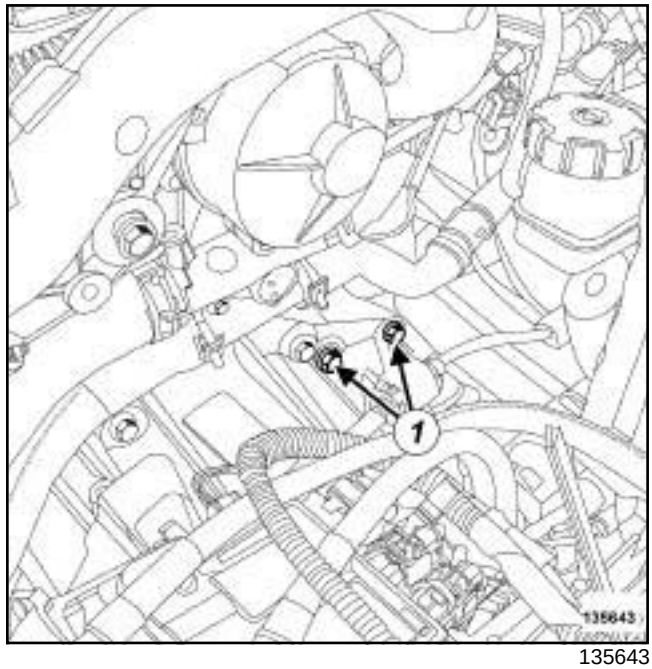

135643

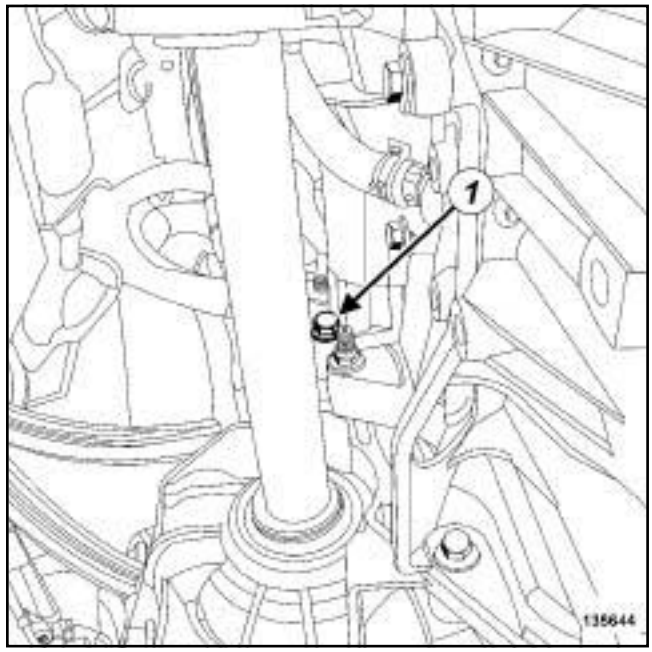

135644

❑ Remove:

- the starter bolts (**1**) ,
- the starter.

REFITTING

I - REFITTING PREPARATION OPERATION

❑ Check that the centring dowel is in place.

F9Q

II - REFITTING OPERATION FOR PART CONCERNED

❏ Refit the starter.

❏ Fit the starter wiring.

❏ Tighten to torque:

- the **starter excitation cable nut (5 N.m)**,
- the **starter supply cable nut (8 N.m)**.

III - FINAL OPERATION

❏ Refit:

- the turbocharger outlet exhaust gas duct (see **12B**, **Turbocharging**, **Turbocharger outlet exhaust gas duct: Removal - Refitting**, page **12B-49**) ,
- the lower engine tie-bar (see **19D**, **Engine mounting**, **Lower engine tie-bar: Removal - Refitting**, page **19D-33**) ,
- the intercooler air inlet pipe (see **12B**, **Turbocharging**, **Intercooler air inlet pipe: Removal - Refitting**, page **12B-41**) ,
- the battery tray (see **Battery tray: Removal - Refitting**) (80A, Battery),
- the battery (see **Battery : Removal - Refitting**) (80A, Battery),
- the scoop under the scuttle panel grille (see **Scoop under scuttle panel grille: Removal - Refitting**) (56A, Exterior equipment),
- the scuttle panel grille (see **Scuttle panel grille: Removal - Refitting**) (56A, Exterior equipment),
- the windscreen wiper arms (see **Windscreen wiper arm: Removal - Refitting**) (85A, Wiping - Washing),
- the engine undertray,
- the engine cover.

F4R

Tightening torques ▽	
nut on the positive terminal of the starter	**8 N.m**
nut on the starter excitation terminal	**7 N.m**

REMOVAL

I - REMOVAL PREPARATION OPERATION

❏ Position the vehicle on a two-post lift (see **Vehicle: Towing and lifting**) (02A, Lifting equipment).

❏ Disconnect the battery (see **Battery: Removal - Refitting**) (80A, Battery).

❏ Remove:

- the windscreen wiper arms (see **Windscreen wiper arm: Removal - Refitting**) (85A, Wiping - Washing),
- the scuttle panel grille (see **Scuttle panel grille: Removal - Refitting**) (56A, Exterior equipment),
- the scoop under the scuttle panel grille (see **Scoop under scuttle panel grille: Removal - Refitting**) (56A, Exterior equipment),
- the timing end lifting eye bolt,
- the lifting eye on the timing end,
- the front right-hand wheel (see **Wheel: Removal - Refitting**) (35A, Wheels and tyres),
- the front section of the front right-hand wheel arch liner (see **Front wheel arch liner: Removal - Refitting**) (55A, Exterior protection),
- the lower engine tie-bar (see **19D**, **Engine mounting**, **Lower engine tie-bar: Removal - Refitting**, page **19D-33**) ,
- the connecting hose (see **19B**, **Exhaust**, **Connecting hose: Removal - Refitting**, page **19B-60**) ,
- the engine undertray bolts,
- the engine undertray,
- the catalytic converter (see **19B**, **Exhaust**, **Catalytic converter: Removal - Refitting**, page **19B-17**) .

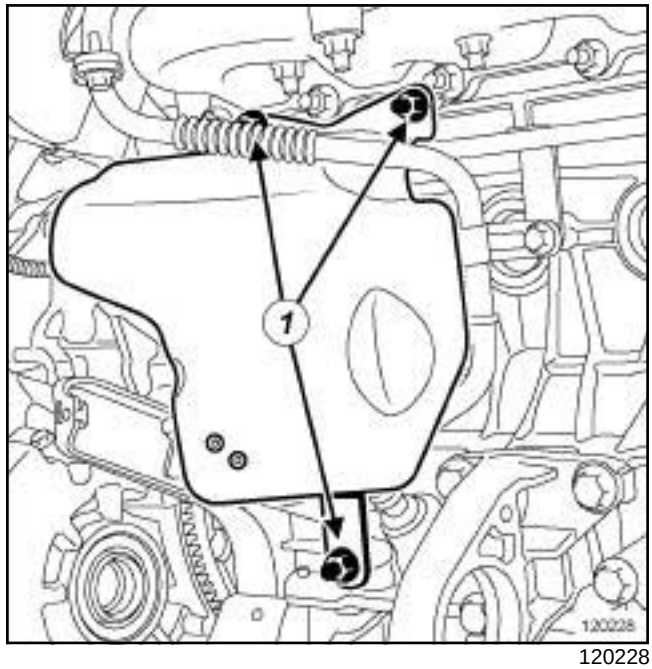

120228

❏ Remove:

- the nuts (**1**) from the starter heat shield,
- the starter heat shield.

F4R

II - OPERATION FOR REMOVAL OF PART CONCERNED

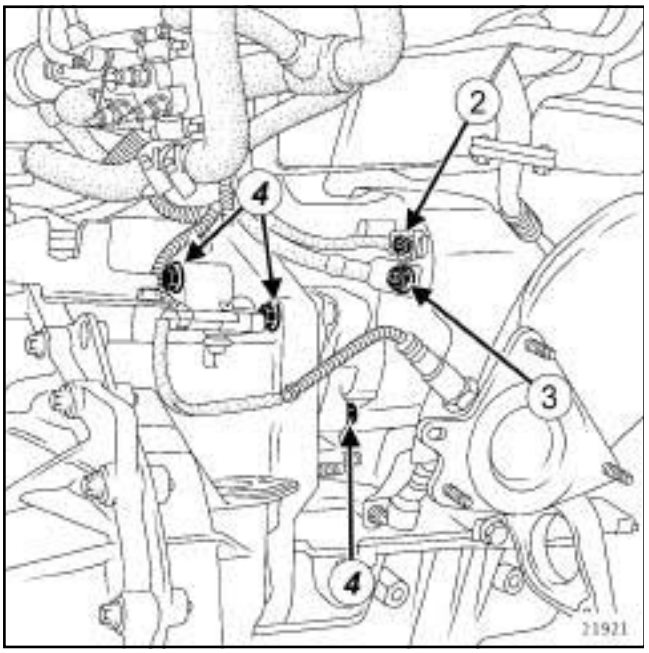

21921

❑ Remove:

- the nut on the starter excitation terminal (**2**) ,
- the nut on the positive terminal of the starter (**3**) .

❑ Move the starter wiring aside.

❑ Remove:

- the starter bolts (**4**) ,
- the starter.

REFITTING

I - REFITTING PREPARATION OPERATION

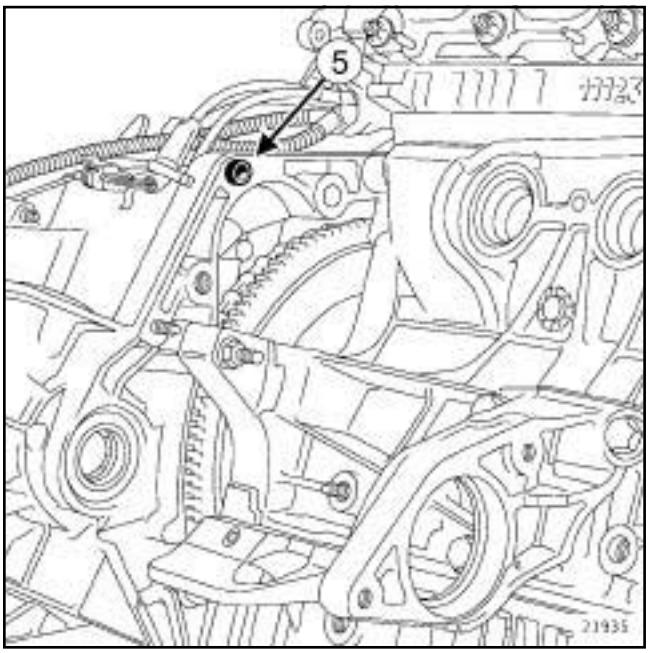

21935

❑ Check that the centring dowel (**5**) is in place.

II - REFITTING OPERATION FOR PART CONCERNED

❑ Refit the starter.

❑ Fit the starter wiring.

❑ Tighten to torque:

- the **nut on the positive terminal of the starter (8 N.m)**,
- the **nut on the starter excitation terminal (7 N.m)**.

III - FINAL OPERATION

❑ Refit:

- the heat shield to the starter,
- the catalytic converter (see **19B**, **Exhaust**, **Catalytic converter: Removal - Refitting**, page **19B-17**) ,
- the connecting hose (see **19B**, **Exhaust**, **Connecting hose: Removal - Refitting**, page **19B-60**) ,
- the lower engine tie-bar (see **19D**, **Engine mounting**, **Lower engine tie-bar: Removal - Refitting**, page **19D-33**) ,
- the engine undertray,

F4R

- the front section of the front right-hand wheel arch liner (see **Front wheel arch liner: Removal - Refitting**) (55A, Exterior protection),
- the front right-hand wheel (see **Wheel: Removal - Refitting**) (35A, Wheels and tyres),
- the lifting eye on the timing end,
- the scoop under the scuttle panel grille (see **Scoop under scuttle panel grille: Removal - Refitting**) (56A, Exterior equipment),
- the scuttle panel grille (see **Scuttle panel grille: Removal - Refitting**) (56A, Exterior equipment),
- the windscreen wiper arms (see **Windscreen wiper arm: Removal - Refitting**) (85A, Wiping - Washing),

❏ Connect the battery (see **Battery : Removal - Refitting**) (80A, Battery).

F4R

Tightening torques ▽	
coil bolts	**12 N.m**

REMOVAL

I - REMOVAL PREPARATION OPERATION

❑ Remove the front engine cover.

II - OPERATION FOR REMOVAL OF PART CONCERNED

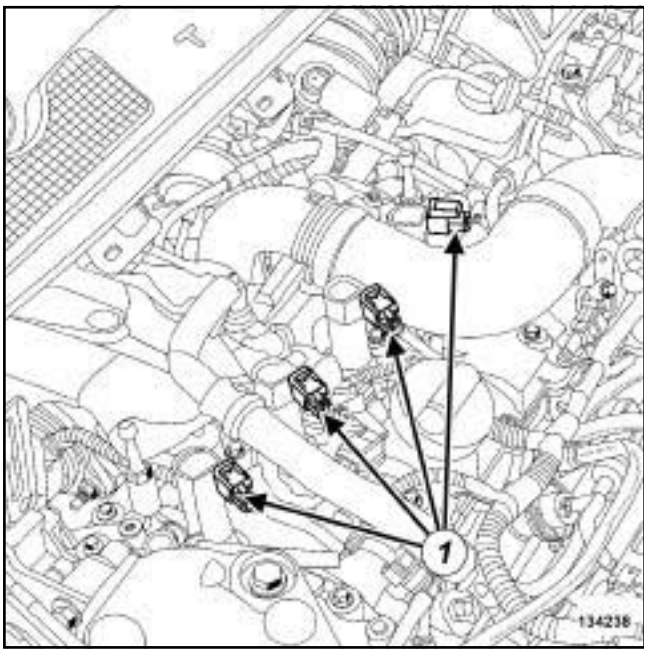

134238

❑ Disconnect the coil connectors (**1**) .

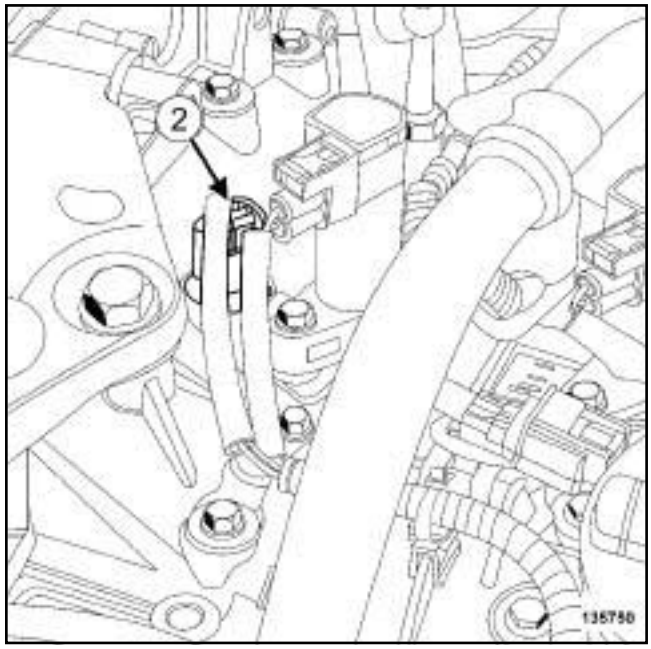

135750

❑ Disconnect the connector (**2**) from the camshaft dephaser solenoid valve.

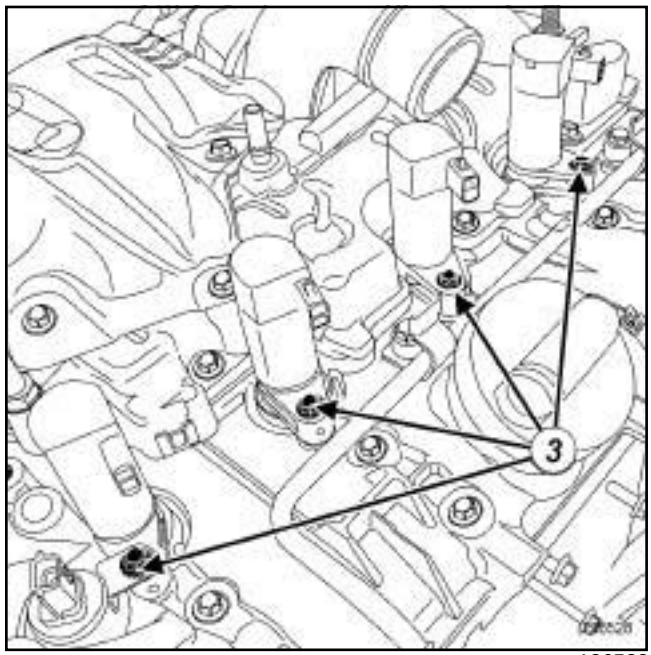

136528

❑ Remove the coil bolts (**3**) .

❑ Move aside the camshaft dephaser solenoid valve.

❑ Remove the coils.

F4R

REFITTING

I - REFITTING PREPARATION OPERATION

106443

- ❑ Apply a bead of **FLUOSTAR 2L** grease (see **Vehicle: Parts and ingredients for the repairwork**) (04B, Consumables - Products) **2 mm** in diameter at (**4**) on the internal perimeter of the high tension caps on the four coils.

II - REFITTING OPERATION FOR PARTS CONCERNED

- ❑ Refit the coils.
- ❑ Position the camshaft dephaser solenoid valve.
- ❑ Torque tighten the **coil bolts (12 N.m)**.
- ❑ Connect:
  - the camshaft dephaser solenoid valve connector,
  - the coil connectors.

III - FINAL OPERATION

- ❑ Refit the engine cover.

K4M

Tightening torques ▽	
coil bolts	**14 N.m**

REMOVAL

I - REMOVAL PREPARATION OPERATION

❑ Remove the front engine cover.

II - OPERATION FOR REMOVAL OF PART CONCERNED

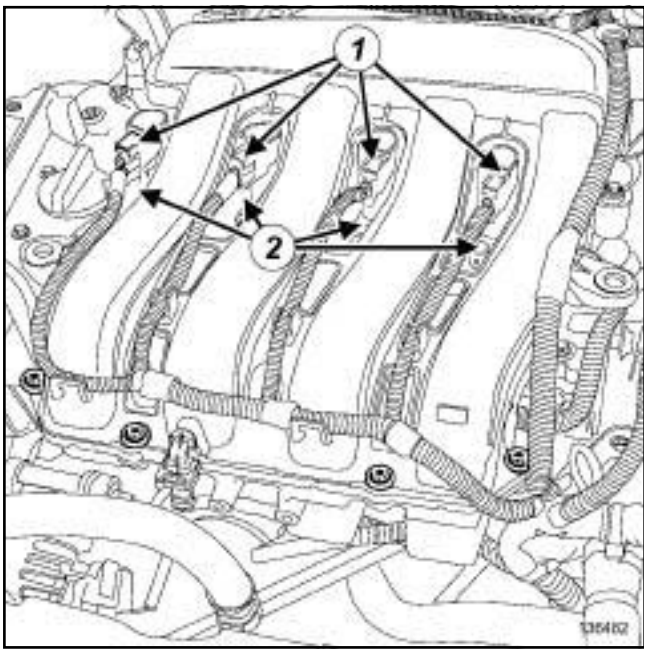

136482

❑ Disconnect the coil connectors (**1**) .

❑ Remove:

- the coil bolts (**2**) ,
- the coils.

K4M

REFITTING

I - REFITTING PREPARATION OPERATION

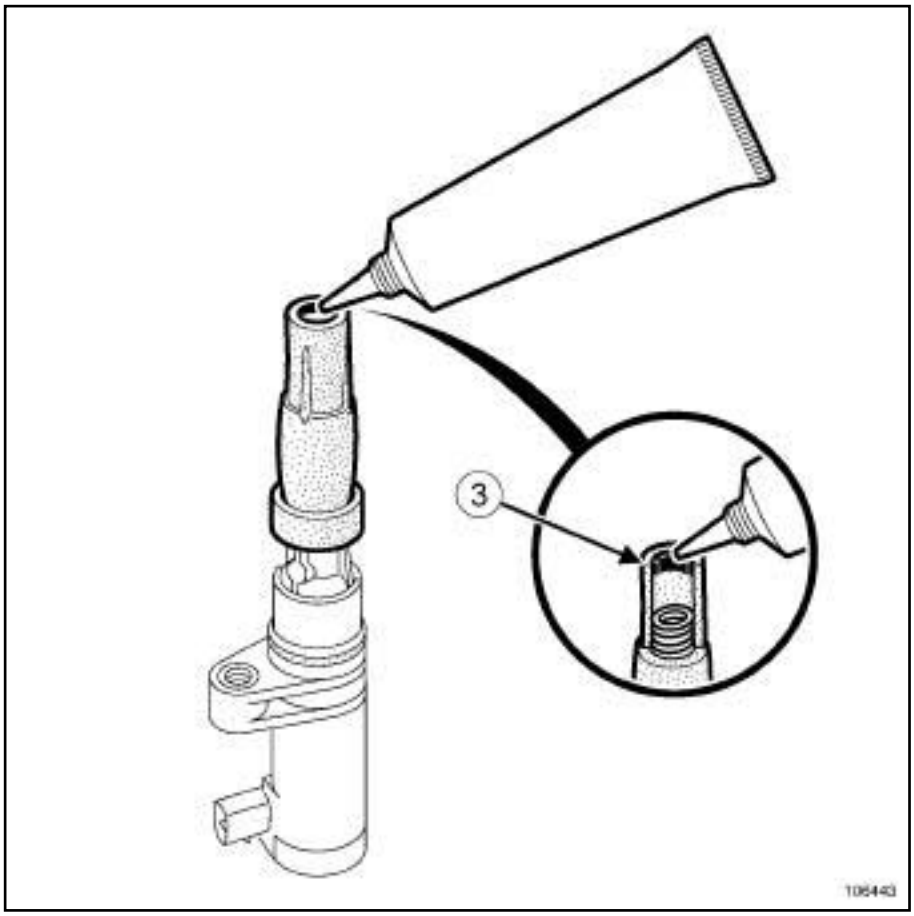

106443

- ❑ Apply a bead of **FLUOSTAR 2L** grease (**3**) (see **Vehicle: Parts and ingredients for the repairwork**) (04B, Consumables - Products) **2 mm** in diameter on the internal perimeter of the high tension caps on the four coils.
- ❑ Always replace the coil bolts.

II - REFITTING OPERATION FOR PART CONCERNED

- ❑ Refit the coils equipped with new bolts.
- ❑ Torque tighten the **coil bolts (14 N.m)**.
- ❑ Connect the connectors to the coils.

III - FINAL OPERATION

- ❑ Refit the engine cover.

K4M

Essential special tooling	
Ele. 1382	Spark plug spanner toolkit 16 & 21 mm torque 1.75 & 28 Nm + square adapter 9-9.52 for spanner Ele. 1086

Tightening torques ▽	
spark plugs	**25 N.m**

REMOVAL

I - REMOVAL PREPARATION OPERATION

❑ Remove:

- the engine cover,
- the coils (see **17A**, **Ignition**, **Coils Removal - Refitting**, page **17A-1**) .

II - OPERATION FOR REMOVAL OF PART CONCERNED

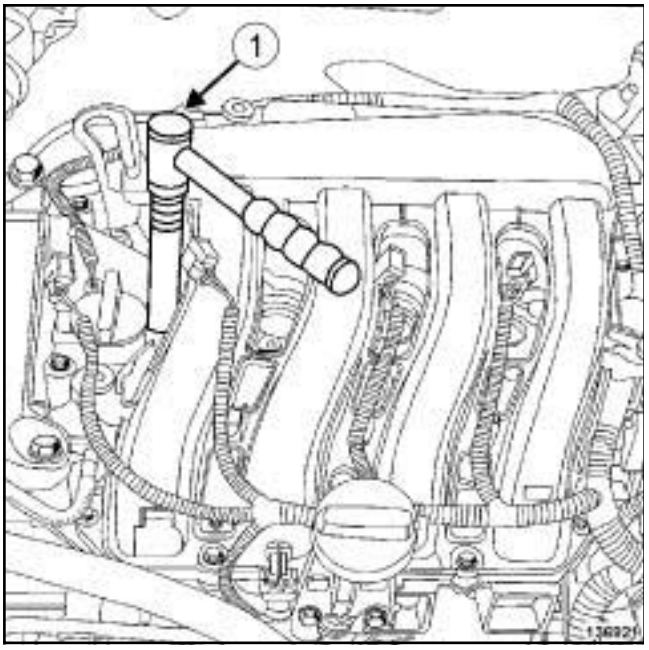

136921

❑ Remove the spark plugs using the **(Ele. 1382)** (**1**) .

REFITTING

I - REFITTING OPERATION FOR PART CONCERNED

❑ Refit the plugs.

❑ Torque tighten the **spark plugs (25 N.m)** using the tool **(Ele. 1382)**.

> Note:
>
> Use the limited torque wrench of **(Ele. 1382)** with the grey sleeve.

II - FINAL OPERATION

❑ Refit:

- the coils (see **17A**, **Ignition**, **Coils Removal - Refitting**, page **17A-1**) ,
- the engine cover.

F4R

Essential special tooling	
Ele. 1382	Spark plug spanner toolkit 16 & 21 mm torque 1.75 & 28 Nm + square adapter 9-9.52 for spanner Ele. 1086

Tightening torques ▽	
spark plugs	**28 N.m**

REMOVAL

I - REMOVAL PREPARATION OPERATION

❑ Remove:

- the engine cover,
- the coils (see **17A**, **Ignition**, **Coils Removal - Refitting**, page **17A-1**) .

II - OPERATION FOR REMOVAL OF PART CONCERNED

❑ Remove the spark plugs using the **(Ele. 1382)**.

REFITTING

I - REFITTING OPERATION FOR PART CONCERNED

❑ Refit the plugs.

❑ Torque tighten the **spark plugs (28 N.m)** using the **(Ele. 1382)**.

> Note:
>
> Use the limited torque wrench of **(Ele. 1382)** with the grey sleeve.

II - FINAL OPERATION

❑ Refit:

- the coils (see **17A**, **Ignition**, **Coils Removal - Refitting**, page **17A-1**) ,
- the engine cover.

K4M

Essential special tooling	
Ele. 1382	Spark plug spanner toolkit 16 & 21 mm torque 1.75 & 28 Nm + square adapter 9-9.52 for spanner Ele. 1086

Tightening torques ▽	
plugs	**25 N.m**

REMOVAL

I - REMOVAL PREPARATION OPERATION

❑ Remove:

- the engine cover,
- the coils (see **17A**, **Ignition**, **Coils Removal - Refitting**, page **17A-1**) .

II - OPERATION FOR REMOVAL OF PART CONCERNED

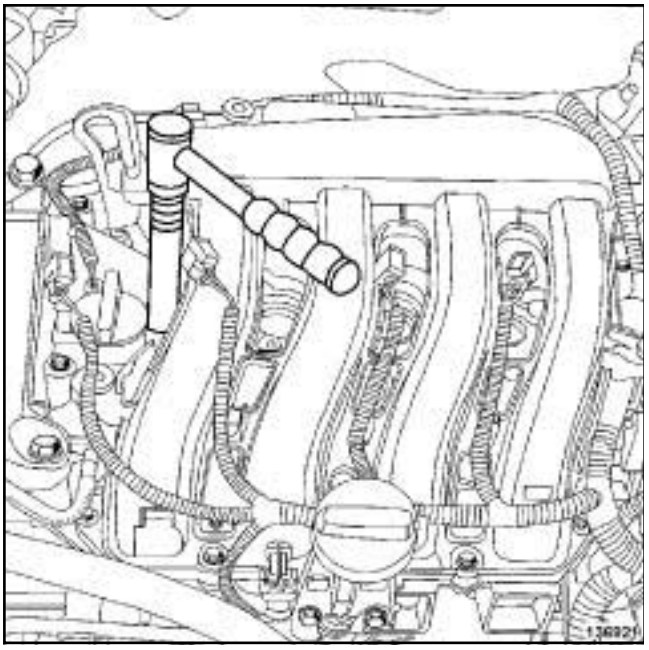

136921

❑ Remove the spark plugs using the **(Ele. 1382)**.

REFITTING

I - REFITTING OPERATION FOR PART CONCERNED

❑ Refit the plugs.

❑ Torque tighten the **plugs (25 N.m)** using the tool **(Ele. 1382)**.

> Note:
>
> Use the limited torque wrench of **(Ele. 1382)** with the grey sleeve.

II - FINAL OPERATION

❑ Refit:

- the coils (see **17A**, **Ignition**, **Coils Removal - Refitting**, page **17A-1**) ,
- the engine cover.

K4M

Essential special tooling	
Mot. 1495-01	22 mm socket for removing/ refitting oxygen sensors.

WARNING

Do not use any product designed to improve the electrical contact in the injection computer and oxygen sensor connectors or on the bodies of the oxygen sensors.

Failure to respect this advice causes the oxygen sensor to malfunction and results in failure to comply with the emission control standard.

WARNING

If the connections are corroded, repair the wiring (see **Wiring: Precautions for repair**) (Technical Note 6015A, 88A, Wiring).

Note:

This procedure is for removal - refitting of the upstream oxygen sensor and the downstream oxygen sensor.

REMOVING THE UPSTREAM OXYGEN SENSOR

I - REMOVAL PREPARATION OPERATION

❑ Remove:

- the engine cover,
- the windscreen wiper arms (see **Windscreen wiper arm: Removal - Refitting**) (85A, Wiping - Washing),
- the scuttle panel grille (see **Scuttle panel grille: Removal - Refitting**) (56A, Exterior equipment),
- the scoop under the scuttle panel grille (see **Scoop under scuttle panel grille: Removal - Refitting**) (56A, Exterior equipment),
- the throttle valve (see **12A**, **Fuel mixture**, **Throttle valve: Removal - Refitting**, page **12A-17**) ,
- the intake distributor (see **12A**, **Fuel mixture**, **Inlet manifold: Removal - Refitting**, page **12A-23**) .

II - OPERATION FOR REMOVAL OF PART CONCERNED

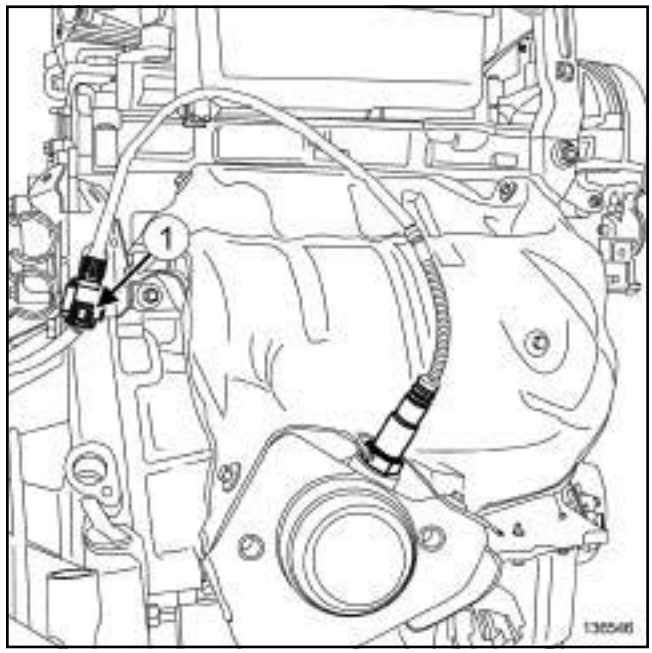

136546

❑ Unclip the upstream oxygen sensor connector (**1**) .

❑ Disconnect the upstream oxygen sensor connector.

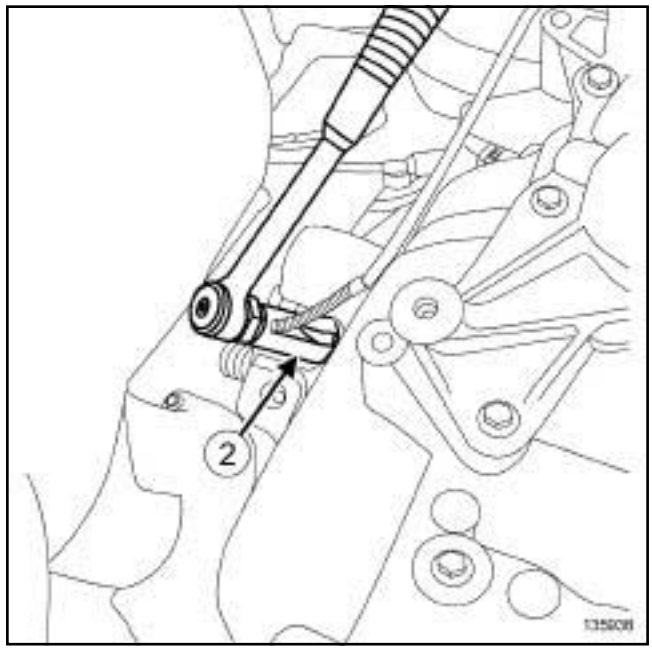

135938

❑ Remove the upstream oxygen sensor (**2**) using the **(Mot. 1495-01)**.

K4M

REFITTING THE UPSTREAM OXYGEN SENSOR

I - REFITTING OPERATION FOR PART CONCERNED

❏ Refit the upstream oxygen sensor using the **(Mot. 1495-01)**.

❏ Connect the upstream oxygen sensor connector.

❏ Clip on the upstream oxygen sensor connector.

II - FINAL OPERATION

❏ Refit:

- the inlet manifold (see **12A**, **Fuel mixture**, **Inlet manifold: Removal - Refitting**, page **12A-23**) ,
- the throttle valve (see **12A**, **Fuel mixture**, **Throttle valve: Removal - Refitting**, page **12A-17**) ,
- the scoop under the scuttle panel grille (see **Scoop under scuttle panel grille: Removal - Refitting**) (56A, Exterior equipment),
- the scuttle panel grille (see **Scuttle panel grille: Removal - Refitting**) (56A, Exterior equipment),
- the windscreen wiper arms (see **Windscreen wiper arm: Removal - Refitting**) (85A, Wiping - Washing),
- the engine cover.

REMOVING THE DOWNSTREAM OXYGEN SENSOR

I - REMOVAL PREPARATION OPERATION

❏ Position the vehicle on a two-post lift (see **Vehicle: Towing and lifting**) (02A, Lifting equipment).

II - OPERATION FOR REMOVAL OF PART CONCERNED

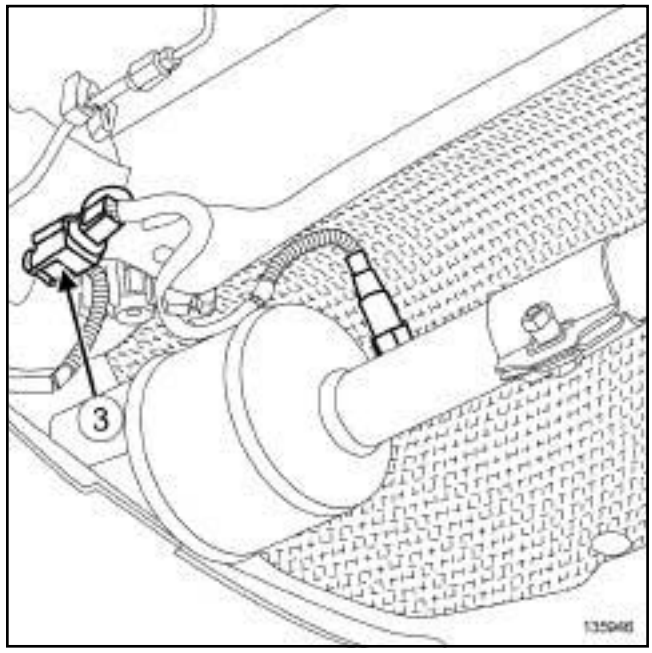

135946

❏ Unclip the downstream oxygen sensor connector (**3**) .

❏ Disconnect the downstream oxygen sensor connector.

❏ Unclip the downstream oxygen sensor wiring.

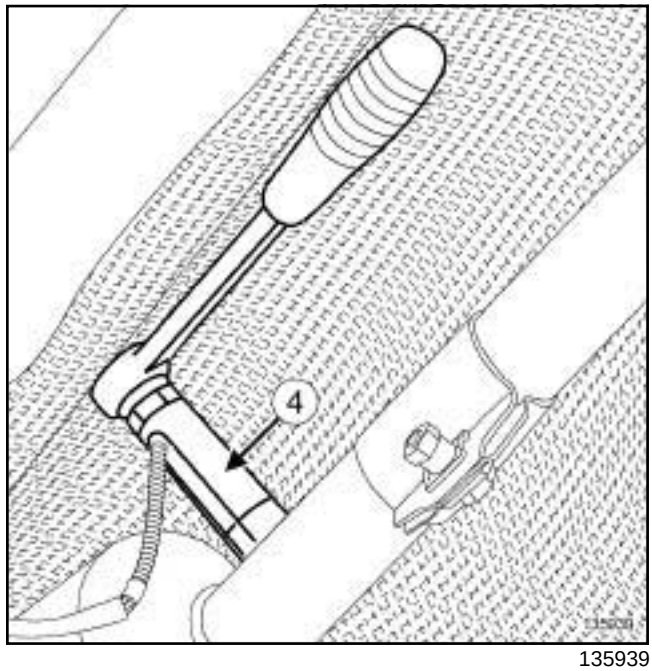

135939

❏ Remove the downstream oxygen sensor (**4**) using the **(Mot. 1495-01)**.

K4M

REFITTING THE DOWNSTREAM OXYGEN SENSOR

REFITTING OPERATION FOR PART CONCERNED

- Refit the downstream oxygen sensor using the **(Mot. 1495-01)**.
- Connect the downstream oxygen sensor connector.
- Clip:
  - the downstream oxygen sensor wiring,
  - the downstream oxygen sensor connector.

F4R

Essential special tooling	
Mot. 1495-01	22 mm socket for removing/ refitting oxygen sensors.

Tightening torques ▽	
upstream oxygen sensor	**34 N.m**
downstream oxygen sensor	**34 N.m**

IMPORTANT
Wear heat protective gloves during the operation.

IMPORTANT
Wear protective gloves during the operation.

WARNING
To prevent the surrounding components from overheating, do not damage (tear, pierce, bend, etc.) a heat shield.

Any damaged heat shields must be replaced.

WARNING
Do not use any product designed to improve the electrical contact in the injection computer and oxygen sensor connectors or on the bodies of the oxygen sensors.

Failure to respect this advice causes the oxygen sensor to malfunction and results in failure to comply with the emission control standard.

WARNING
If the connections are corroded, repair the wiring (see **Wiring: Precautions for repair)** (Technical Note 6015A, 88A, Wiring).

REMOVAL OF THE UPSTREAM OXYGEN SENSOR

I - REMOVAL PREPARATION OPERATION

❑ Remove the front engine cover.

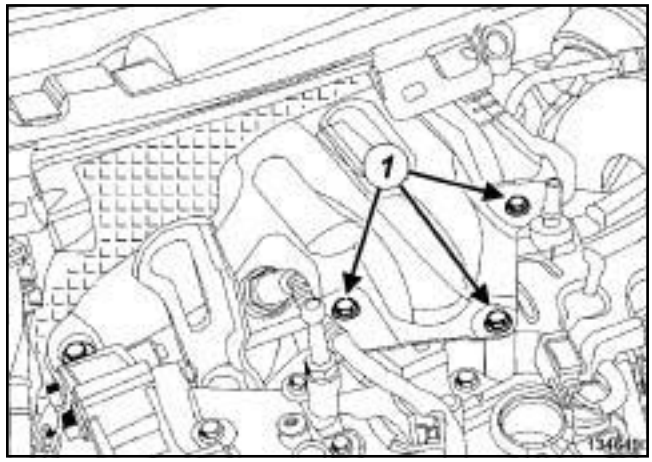

134649

❑ Remove:

- the bolts (**1**) from the turbocharger heat shield,
- the turbocharger heat shield.

II - OPERATION FOR REMOVAL OF PART CONCERNED

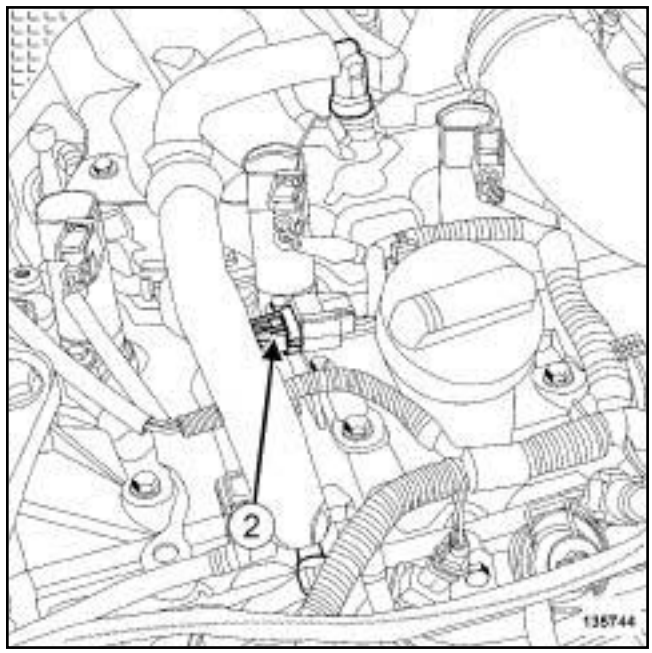

135744

❑ Disconnect the upstream oxygen sensor connector (**2**) .

F4R

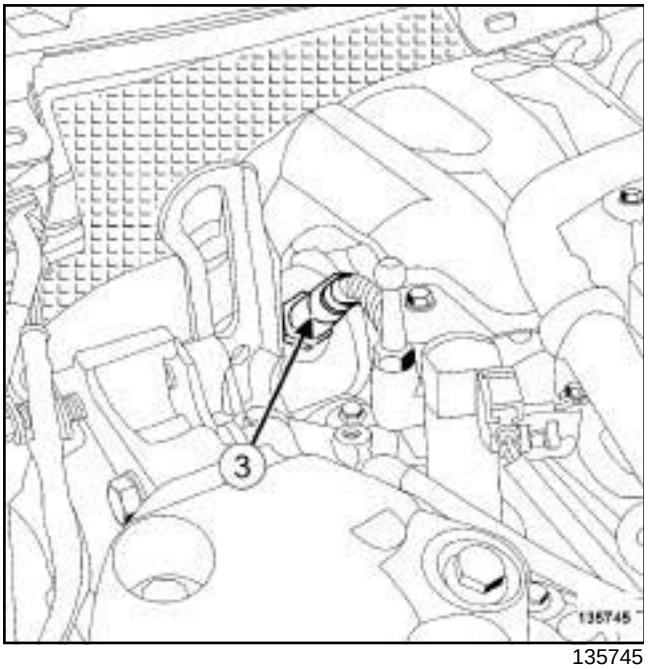

135745

❑ Remove the upstream oxygen sensor (**3**) using the tool **(Mot. 1495-01)**.

REFITTING THE UPSTREAM OXYGEN SENSOR

I - REFITTING OPERATION FOR PART CONCERNED

❑ Refit the upstream oxygen sensor connector on the catalytic converter.

❑ Torque tighten the **upstream oxygen sensor (34 N.m)** using the **(Mot. 1495-01)**.

❑ Connect the upstream oxygen sensor connector.

II - FINAL OPERATION

❑ Refit:

- the turbocharger heat shield,
- the turbocharger heat shield bolts,
- the engine cover.

REMOVAL OF THE DOWNSTREAM OXYGEN SENSOR

I - REMOVAL PREPARATION OPERATION

❑ Remove:

- the engine cover,
- the battery (see **Battery: Removal - Refitting**) (80A, Battery),
- the battery tray (see **Battery tray: Removal - Refitting**) (80A, Battery),
- the air filter unit (see **12A**, **Fuel mixture**, **Air filter unit: Removal - Refitting**, page **12A-4**) .

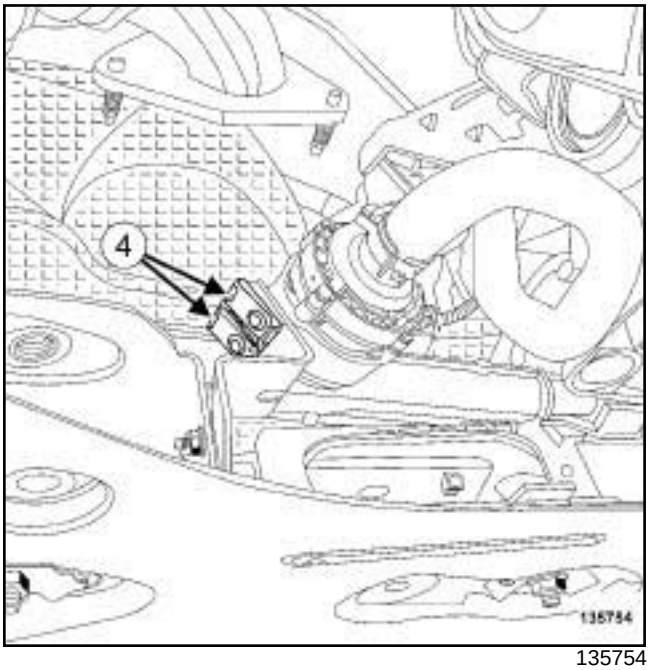

135754

❑ Remove the clips (**4**) from the electric coolant pump.

❑ Move aside the electric water pump.

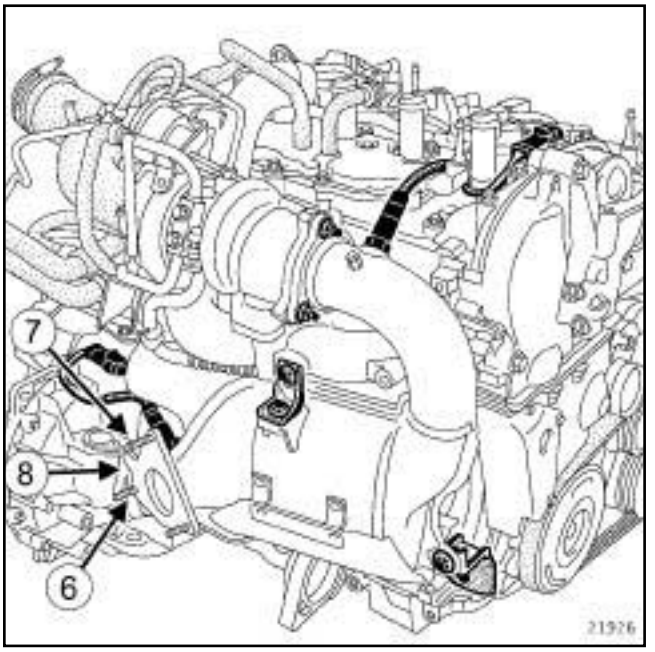

21926

❑ Remove:

- the bolt (**6**) from the catalytic converter strut,
- the catalytic converter strut nut (**7**) ,

- the catalytic converter strut (**8**) .

II - OPERATION FOR REMOVAL OF PART CONCERNED

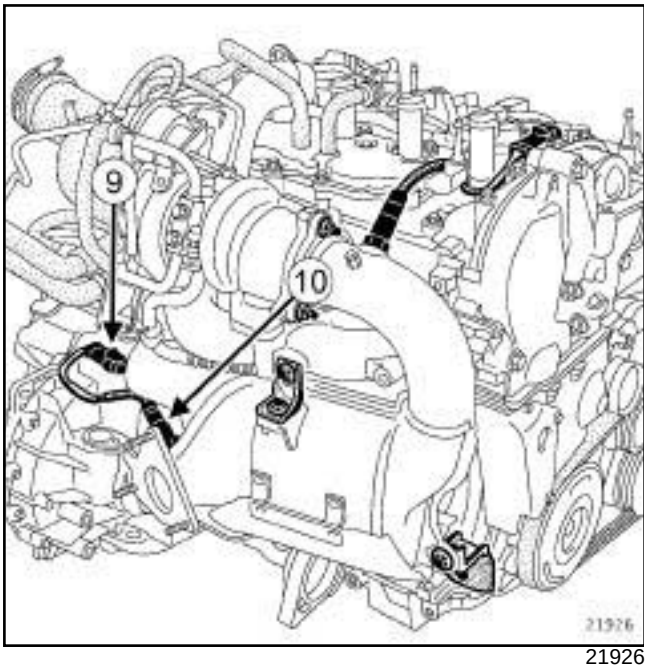

21926

❑ Disconnect the downstream oxygen sensor connector (**9**) ,

❑ Remove the downstream oxygen sensor (**10**) using the **(Mot. 1495-01)**.

REFITTING THE DOWNSTREAM OXYGEN SENSOR

I - REFITTING OPERATION FOR PARTS CONCERNED

❑ Refit the downstream oxygen sensor on the catalytic converter.

❑ Torque tighten the **downstream oxygen sensor (34 N.m)** using the **(Mot. 1495-01)**.

❑ Connect the downstream oxygen sensor connector.

II - FINAL OPERATION

❑ Refit the catalytic converter strut.

❑ Fit the electric coolant pump.

❑ Refit:

- the electric coolant pump clips,
- the air filter unit (see **12A**, **Fuel mixture**, **Air filter unit: Removal - Refitting**, page **12A-4**) ,
- the battery tray (see **Battery tray: Removal - Refitting**) (80A, Battery),
- the battery (see **Battery : Removal - Refitting**) (80A, Battery),
- the engine cover.

F4R or K4M

Essential equipment
diagnostic tool

WARNING

Do not use any product designed to improve the electrical contact in the injection computer and oxygen sensor connectors or on the bodies of the oxygen sensors.

Failure to respect this advice causes the oxygen sensor to malfunction and results in failure to comply with the emission control standard.

WARNING

If the connections are corroded, repair the wiring (see **Wiring: Precautions for repair**) (Technical Note 6015A, 88A, Wiring).

REMOVAL

I - REMOVAL PREPARATION OPERATION

❑ Apply the procedure before repair using the **diagnostic tool** :

- connect the **diagnostic tool**,
- select « petrol injection computer » ,
- go to repair mode,
- display the « before repair procedure » on the selected computer,
- carry out the operations described in the « procedure before repair » section.

❑ Disconnect the battery (see **Battery: Removal - Refitting**) (80A, Battery).

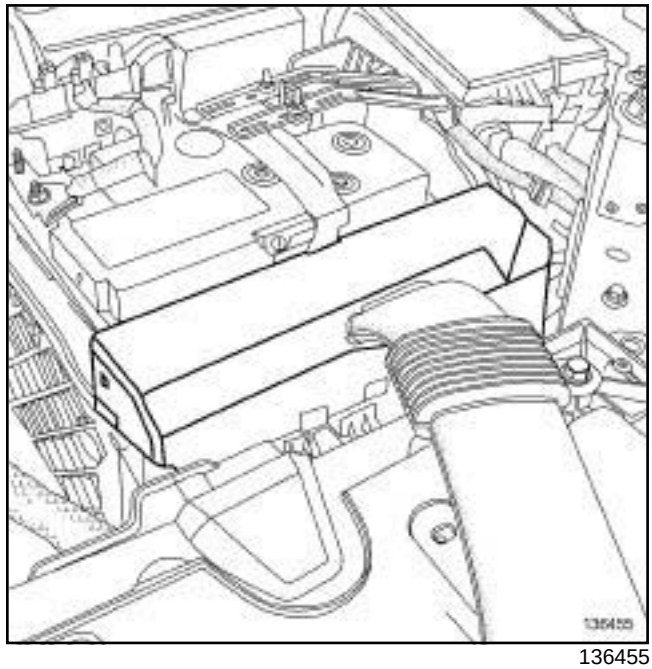

136455

❑ Remove the cover of the petrol injection computer.

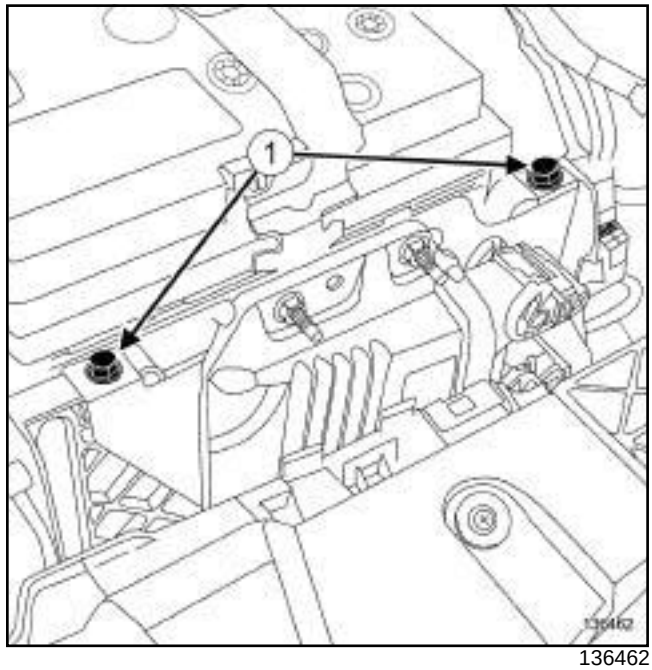

136462

❑ Remove the bolts (**1**) of the petrol injection computer from the battery tray.

II - REMOVAL OPERATION FOR PART CONCERNED

❑ Move aside the petrol injection computer support with the petrol injection computer.

F4R or K4M

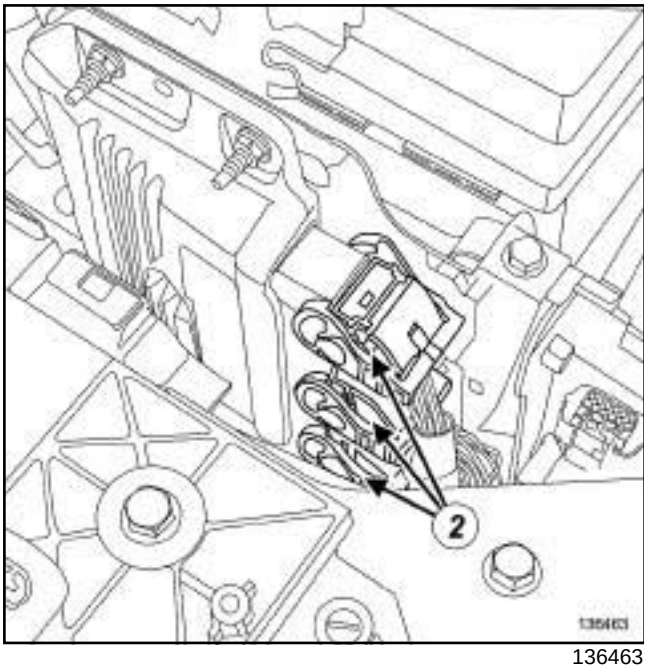

136463

❑ Disconnect the connector (**2**) from the petrol injection computer.

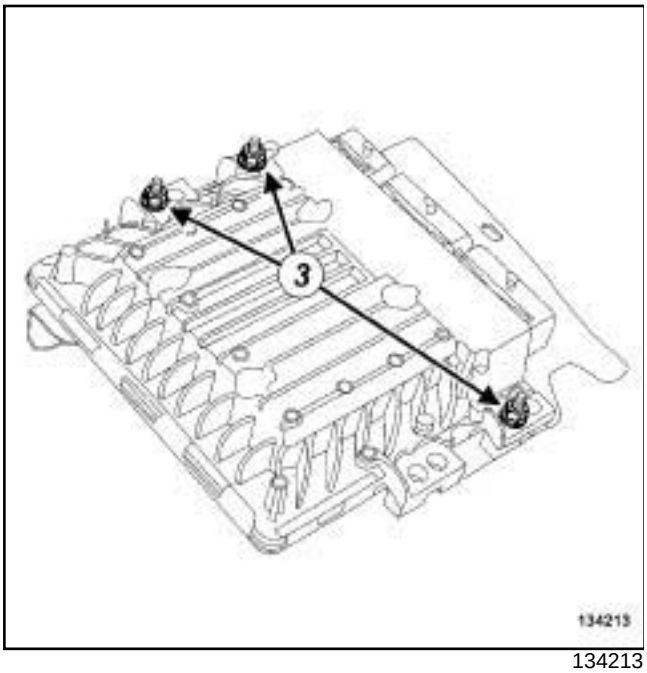

134213

❑ Remove:

- the « Petrol injection computer - computer support » assembly,
- the nuts (**3**) of the petrol injection computer from the support,
- the petrol injection computer.

REFITTING

I - REFITTING OPERATION FOR PART CONCERNED

❑ Refit the petrol injection computer on the support.

❑ Connect the petrol injection computer connectors.

❑ Fit the « Petrol injection computer - computer support » assembly.

❑ Refit:

- the petrol injection computer on the battery tray,
- the petrol injection computer cover.

II - FINAL OPERATION

❑ Connect the battery (see **Battery: Removal - Refitting**) (80A, Battery).

❑ Apply the after repair procedure using the **diagnostic tool** :

- connect the **diagnostic tool**,
- select « petrol injection computer » ,
- go to repair mode,
- display the « after repair procedure » for the selected computer,
- carry out the operations described in the « after repair procedure » section.

K4M

Essential special tooling	
Emb. 1797	24 mm socket for removing and refitting clutch master cylinder

Tightening torques ▽	
pinking sensor	**20 N.m**
alternator strut bolt on the alternator	**25 N.m**
alternator strut nut on the cylinder block	**25 N.m**
alternator strut bolt on the alternator	**25 N.m**
alternator strut bolt on the cylinder block	**25 N.m**
dipstick guide tube bolts	**10 N.m**

REMOVAL

I - REMOVAL PREPARATION OPERATION

❑ Remove the front engine cover.

K4M, and 858 or 866

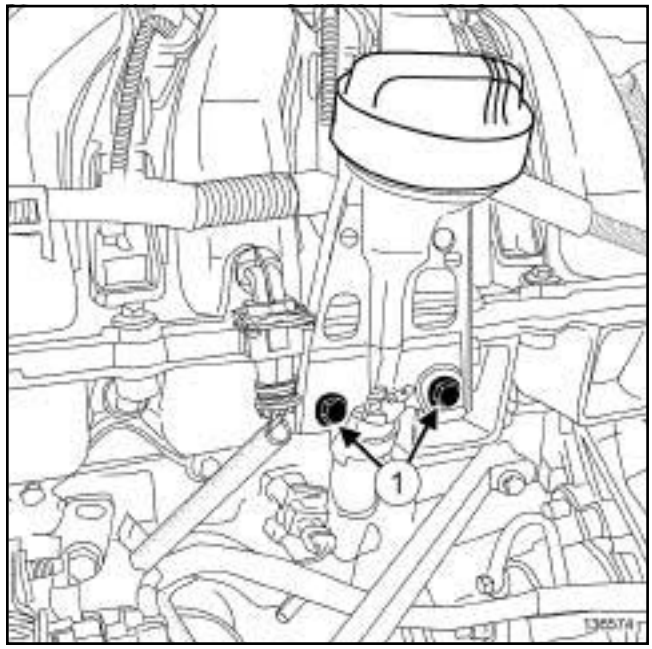

136574

❑ Remove:

- the dipstick,
- the bolts (**1**) from the dipstick tube,
- the dipstick guide.

K4M, and 848

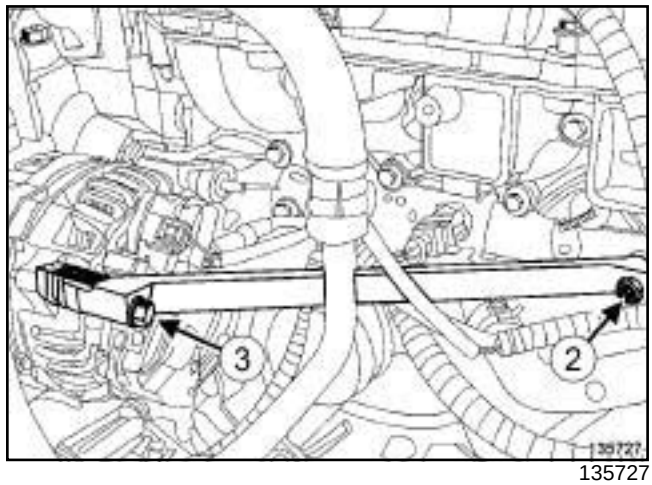

135727

❑ Remove:

- the alternator strut bolt (**2**) from the alternator,
- the alternator strut nut (**3**) from the cylinder block,

K4M

- the alternator strut.

K4M, and 858 or 866

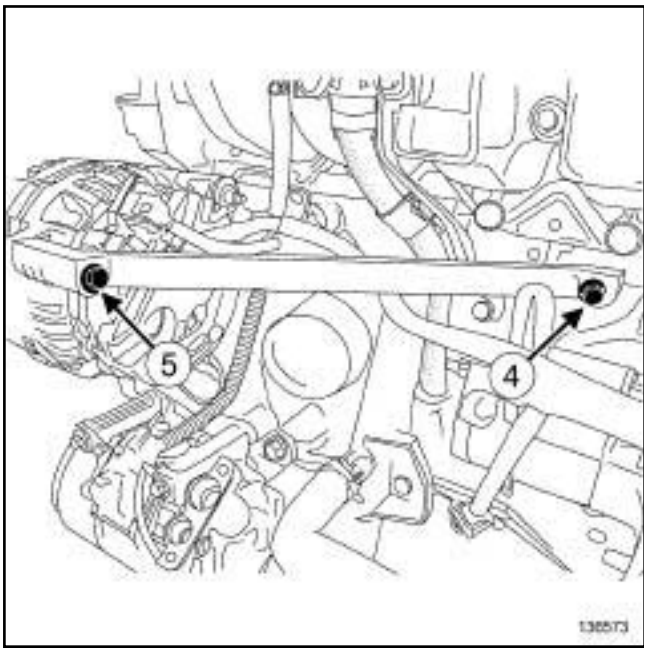

136573

❑ Remove:

- the alternator strut bolt (**4**) from the cylinder block,
- the alternator strut bolt (**5**) from the alternator,
- the alternator strut.

II - OPERATION FOR REMOVAL OF PART CONCERNED

K4M, and 848

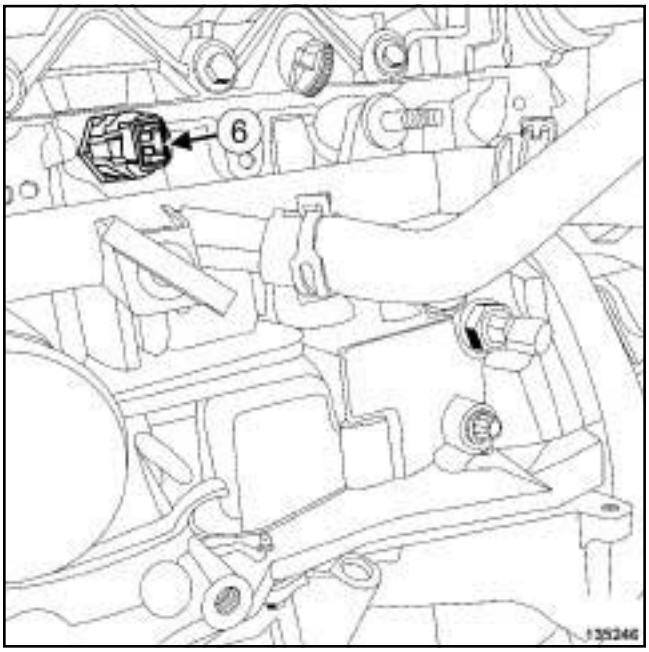

135246

❑ Disconnect the pinking sensor connector.

❑ Remove the pinking sensor (**6**) using the tool **(Emb. 1797)**.

K4M

K4M, and 858 or 866

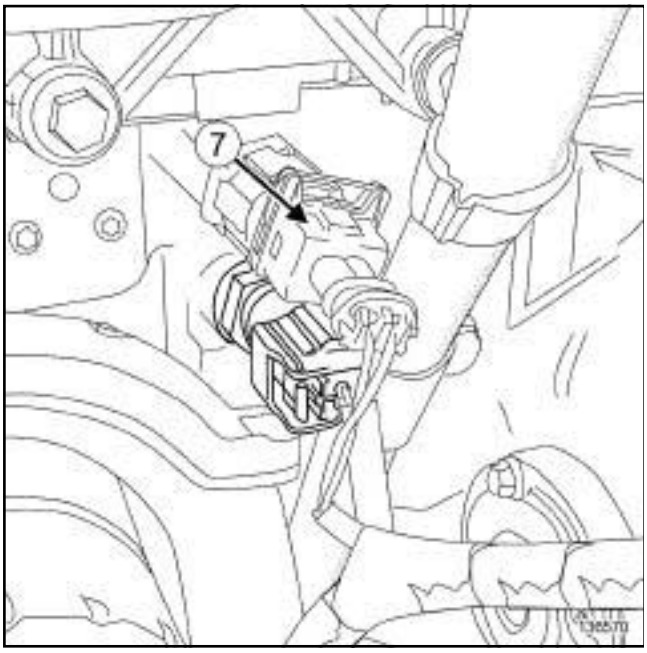

136570

- ❑ Disconnect the pinking sensor connector (**7**) .
- ❑ Remove the pinking sensor using the tool **(Emb. 1797)**.

REFITTING

I - REFITTING OPERATION FOR PART CONCERNED

- ❑ Refit the pinking sensor.
- ❑ Torque tighten the **pinking sensor (20 N.m)** using the tool **(Emb. 1797)**.
- ❑ Connect the pinking sensor connector.

II - FINAL OPERATION

- ❑ Refit the alternator strut.

K4M, and 848

- ❑ Refit:
  - the alternator strut,
  - the alternator strut nut on the cylinder block,
  - the alternator strut bolt on the alternator.
- ❑ Tighten to torque:
  - the **alternator strut bolt on the alternator (25 N.m)**,
  - the **alternator strut nut on the cylinder block (25 N.m)**.

K4M, and 858 or 866

- ❑ Refit:
  - the alternator strut,
  - the alternator strut bolt on the cylinder block,
  - the alternator strut bolt on the alternator.
- ❑ Tighten to torque:
  - the **alternator strut bolt on the alternator (25 N.m)**,
  - the **alternator strut bolt on the cylinder block (25 N.m)**.
- ❑ Refit the dipstick guide.
- ❑ Torque tighten the **dipstick guide tube bolts (10 N.m)**.
- ❑ Refit the dipstick.
- ❑ Refit the engine cover.

F4R

Tightening torques ▽	
pinking sensor nut	**18 N.m**

REMOVAL

I - REMOVAL PREPARATION OPERATION

❏ Position the vehicle on a two-post lift (see **Vehicle: Towing and lifting**) (02A, Lifting equipment).

❏ Remove:

- the engine undertray bolts,
- the engine undertray.

II - OPERATION FOR REMOVAL OF PART CONCERNED

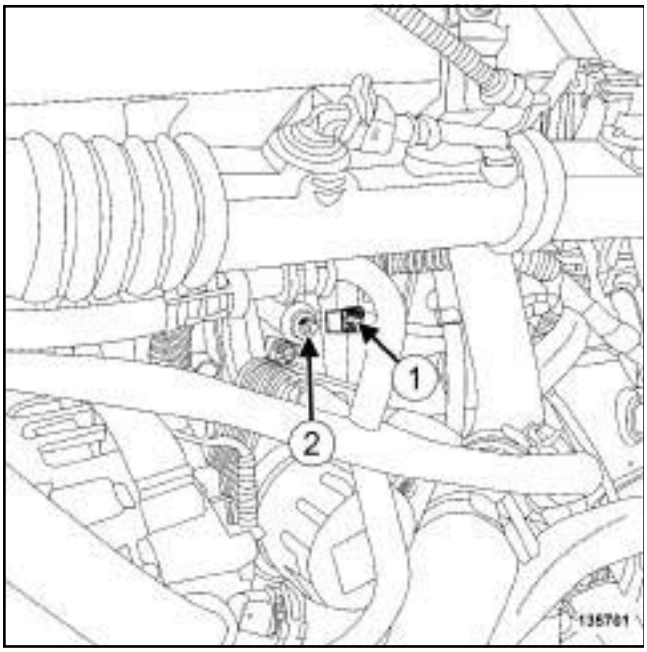

135701

❏ Disconnect the pinking sensor connector (**1**) .

❏ Remove:

- the pinking sensor nut (**2**) ,
- the pinking sensor.

REFITTING

I - REFITTING OPERATION FOR PART CONCERNED

❏ Refit the pinking sensor.

❏ Torque tighten the **pinking sensor nut (18 N.m)**.

❏ Connect the pinking sensor connector.

II - FINAL OPERATION

❏ Refit the engine undertray.

K4M, and 858 or 866

Tightening torques ▽	
camshaft position sensor bolt	**8 Nm**

REMOVAL

I - REMOVAL PREPARATION OPERATION

❑ Remove:

- the engine cover,
- the windscreen wiper arms (see **Windscreen wiper arm: Removal - Refitting**) (85A, Wiping - Washing),
- the scuttle panel grille (see **Scuttle panel grille: Removal - Refitting**) (56A, Exterior equipment),
- the scoop under the scuttle panel grille (see **Scoop under scuttle panel grille: Removal - Refitting**) (56A, Exterior equipment),
- the throttle valve (see **12A**, **Fuel mixture**, **Throttle valve: Removal - Refitting**, page **12A-17**) ,
- the intake distributor (see **12A**, **Fuel mixture**, **Inlet manifold: Removal - Refitting**, page **12A-23**) .

II - OPERATION FOR REMOVAL OF PART CONCERNED

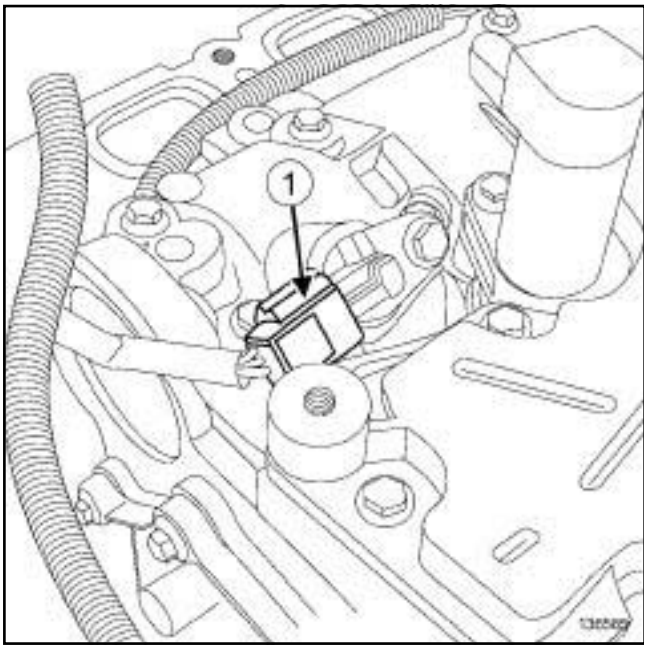

136585

❑ Disconnect the connector (**1**) from the camshaft position sensor.

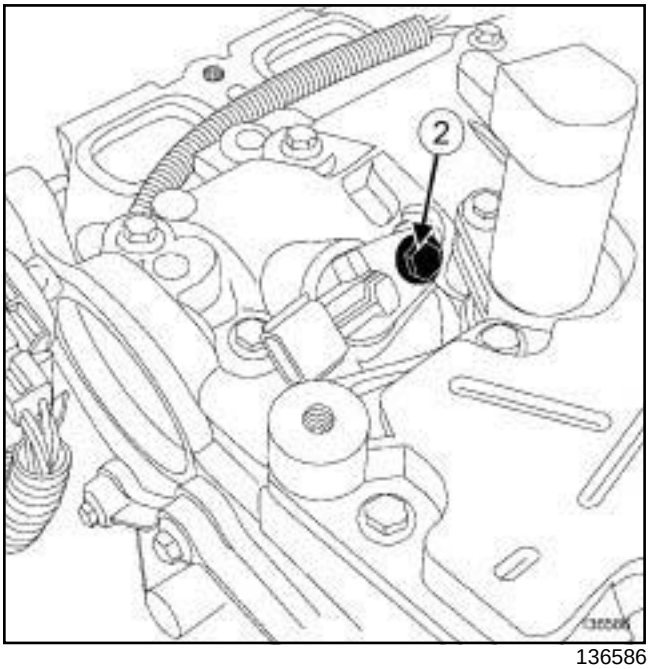

136586

❑ Remove:

- the bolt (**2**) from the camshaft position sensor,
- the camshaft position sensor.

REFITTING

I - REFITTING OPERATION FOR PART CONCERNED

❑ Refit the camshaft position sensor.

❑ Torque tighten the **camshaft position sensor bolt (8 Nm)**.

❑ Connect the camshaft position sensor connector.

II - FINAL OPERATION

❑ Refit:

- the inlet manifold (see **12A**, **Fuel mixture**, **Inlet manifold: Removal - Refitting**, page **12A-23**) ,
- the throttle valve (see **12A**, **Fuel mixture**, **Throttle valve: Removal - Refitting**, page **12A-17**) ,
- the scoop under the scuttle panel grille (see **Scoop under scuttle panel grille: Removal - Refitting**) (56A, Exterior equipment),
- the scuttle panel grille (see **Scuttle panel grille: Removal - Refitting**) (56A, Exterior equipment),
- the windscreen wiper arms (see **Windscreen wiper arm: Removal - Refitting**) (85A, Wiping - Washing),
- the engine cover.

F4R

REMOVAL

I - REMOVAL PREPARATION OPERATION

❑ Remove the front engine cover.

II - OPERATION FOR REMOVAL OF PART CONCERNED

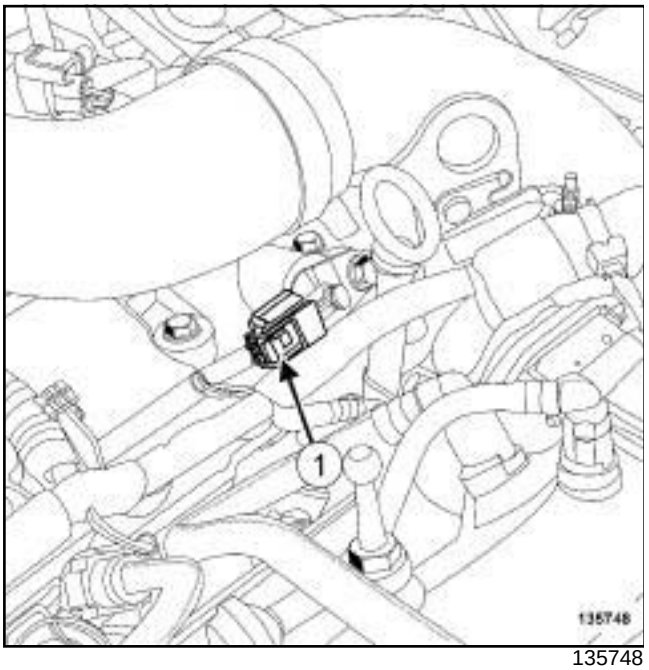

135748

❑ Disconnect the connector (**1**) from the camshaft position sensor.

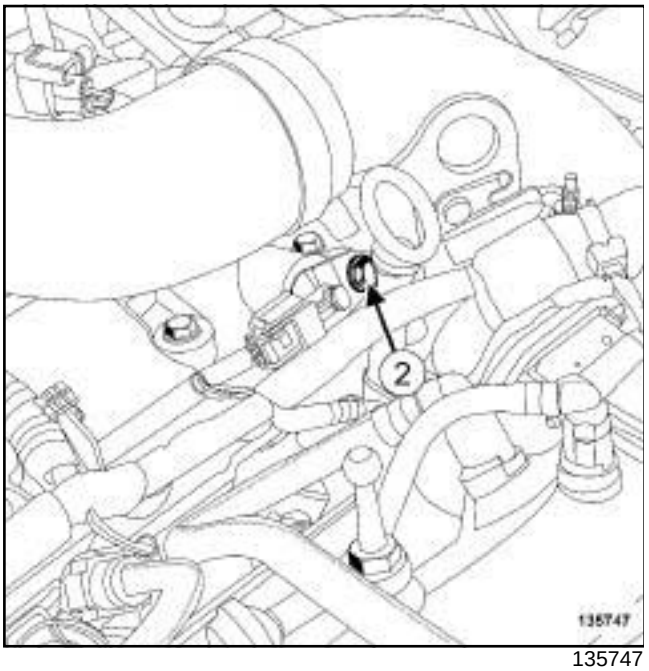

135747

❑ Remove:

- the bolt (**2**) from the camshaft position sensor,
- the camshaft position sensor.

REFITTING

I - REFITTING OPERATION FOR PART CONCERNED

❑ Refit the camshaft position sensor.

❑ Connect the camshaft position sensor connector.

II - FINAL OPERATION

❑ Refit the engine cover.

K4M

Essential equipment
diagnostic tool

Tightening torques ▽	
crankshaft position sensor bolts	**8 N.m**

REMOVAL

I - REMOVAL PREPARATION OPERATION

JH3

❑ Remove the front engine cover.

TL4

❑ Remove:

- the engine undertray bolts,
- the engine undertray.

II - OPERATION FOR REMOVAL OF PART CONCERNED

JH3

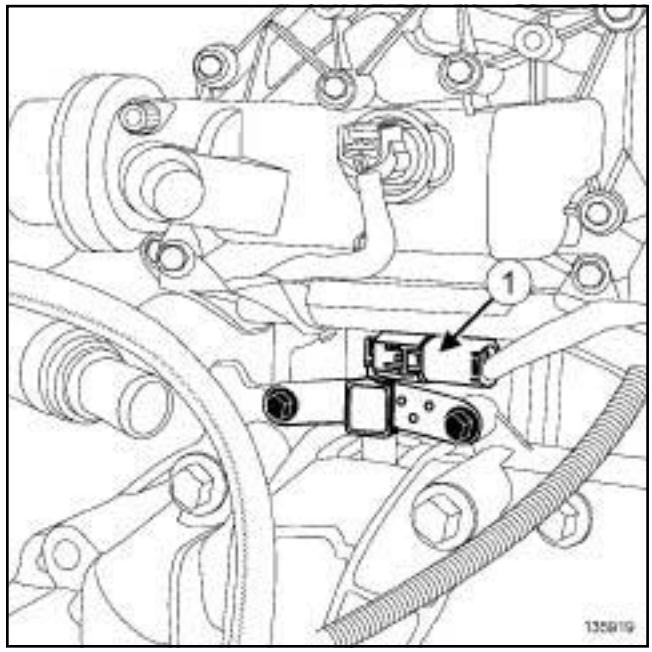

135919

❑ Disconnect the crankshaft position sensor connector (**1**) .

K4M

TL4

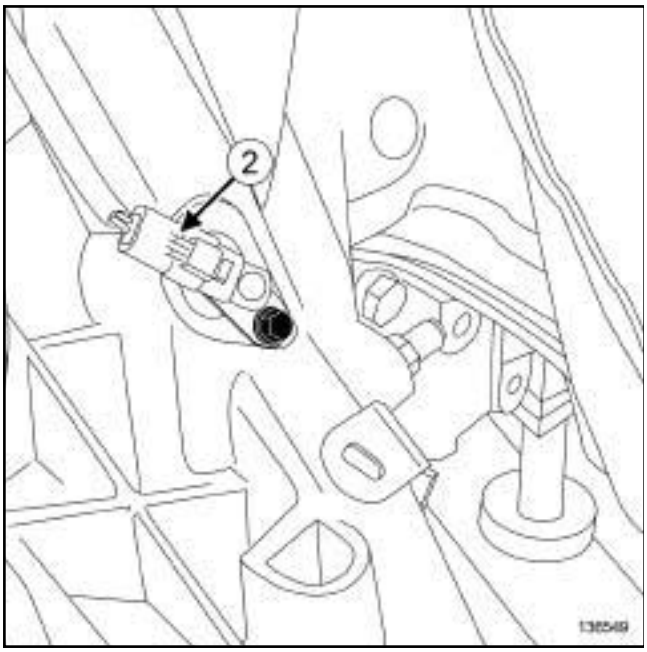

136549

❑ Disconnect the crankshaft position sensor connector (**2**) .

JH3

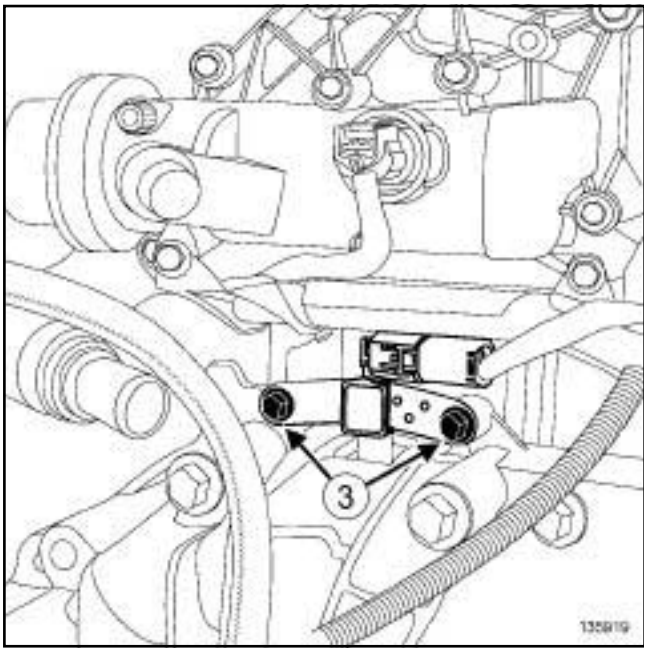

135919

❑ Remove:

- the crankshaft position sensor bolts (**3**) ,
- the crankshaft position sensor.

TL4

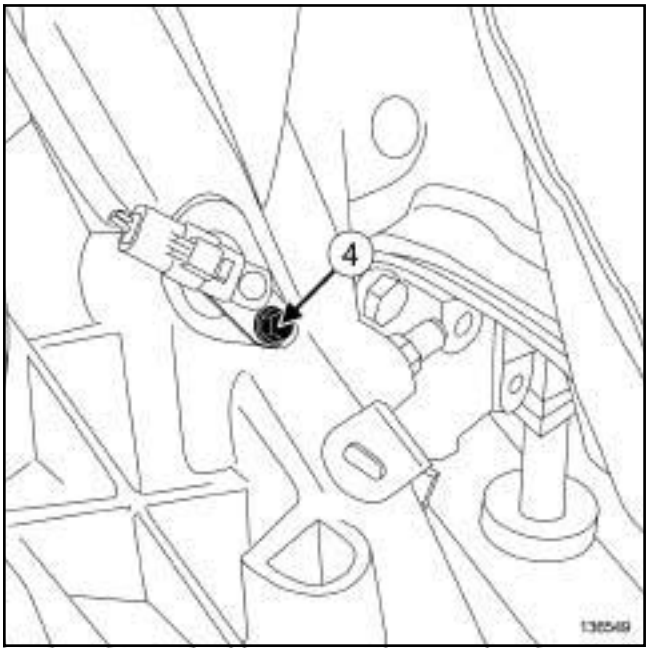

136549

❑ Remove:

- the crankshaft position sensor bolt (**4**) ,
- the crankshaft position sensor.

REFITTING

I - REFITTING OPERATION FOR PART CONCERNED

❑ Refit the crankshaft position sensor.

JH3

❑ Torque tighten the **crankshaft position sensor bolts (8 N.m)**.

❑ Connect the crankshaft position sensor connector.

K4M

II - FINAL OPERATION

TL4

❑ Refit the engine undertray.

JH3

❑ Refit the engine cover.

❑ Apply the after repair procedure using the **diagnostic tool** :

- Connect the **diagnostic tool**,
- select « injection computer » ,
- go to repair mode,
- display the « Before/After repair procedure » for the computer selected,
- select « TDC sensor » in the « List of components controlled by this computer » section,
- carry out the operations described in the « After repair procedure » section.

F4R

REMOVAL

I - REMOVAL PREPARATION OPERATION

❏ Position the vehicle on a two-post lift (see **Vehicle: Towing and lifting**) (02A, Lifting equipment).

❏ Remove:

- the engine undertray bolts,
- the engine undertray.

II - OPERATION FOR REMOVAL OF PART CONCERNED

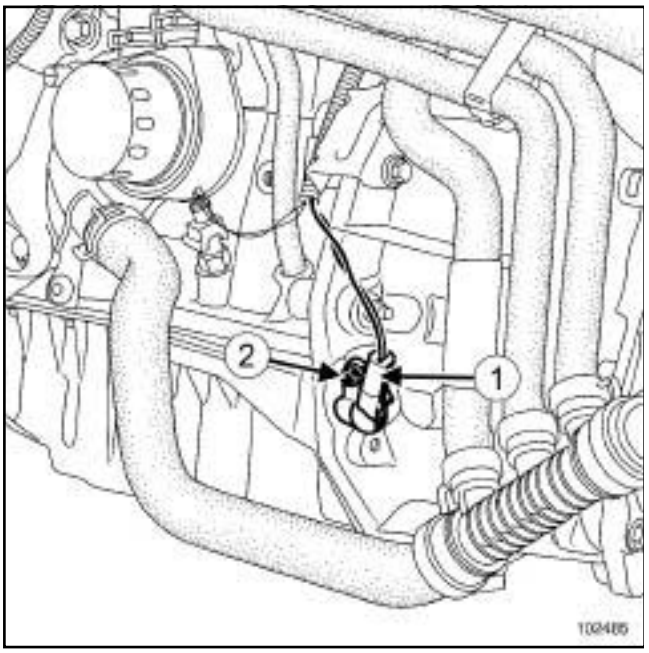

102485

❏ Disconnect the crankshaft position sensor connector (**1**) .

❏ Remove:

- the crankshaft position sensor bolt (**2**) ,
- the crankshaft position sensor.

REFITTING

REFITTING OPERATION FOR PART CONCERNED

❏ Refit the crankshaft position sensor.

❏ Tighten the crankshaft position sensor bolt.

❏ Connect the crankshaft position sensor connector.

FINAL OPERATION

❏ Refit the engine undertray.

K4M

Essential equipment
diagnostic tool

Tightening torques ▽	
bolts of the « injector rail - injector » assembly	**10 N.m**

IMPORTANT
Wear leaktight gloves (Nitrile type) for this operation.

IMPORTANT

During this operation, be sure to:

- refrain from smoking or bringing red hot objects close to the working area,
- be careful of fuel splashes when disconnecting the union.

IMPORTANT
Be careful when removing the injectors or the injection rail as there will be a quantity of fuel in the rail and the union.

REMOVAL

I - REMOVAL PREPARATION OPERATION

❑ Disconnect the battery (see **Battery: Removal - Refitting**) (80A, Battery).

❑ Remove:

- the engine cover,
- the windscreen wiper arms (see **Windscreen wiper arm: Removal - Refitting**) (85A, Wiping - Washing),
- the scuttle panel grille (see **Scuttle panel grille: Removal - Refitting**) (56A, Exterior equipment),
- the scoop under the scuttle panel grille (see **Scoop under scuttle panel grille: Removal - Refitting**) (56A, Exterior equipment),
- the throttle valve (see **12A**, **Fuel mixture**, **Throttle valve: Removal - Refitting**, page **12A-17**) ,
- the intake distributor (see **12A**, **Fuel mixture**, **Inlet manifold: Removal - Refitting**, page **12A-23**) .

II - OPERATION FOR REMOVAL OF PART CONCERNED

❑

WARNING
To avoid any corrosion or damage, protect the areas on which fuel is likely to run.

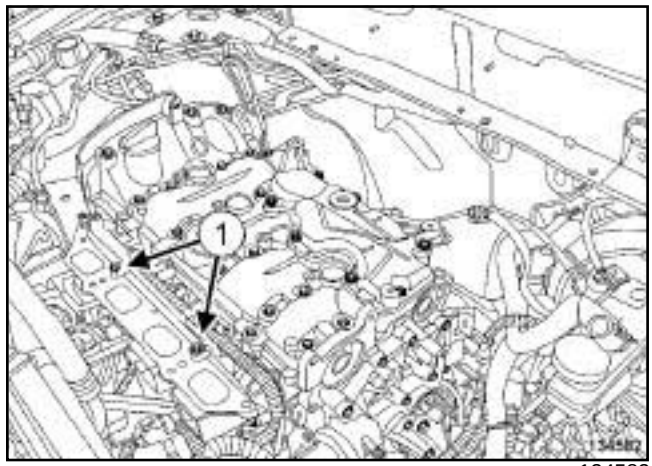

134582

❑ Remove:

- the « injector rail - injector » assembly bolts (**1**) ,
- the « injector rail - injector » assembly.

❑ Unclip the injector wiring from the « injector rail - injector » assembly.

❑ Disconnect:

- all injector connectors,
- the fuel supply pipe union from the injector rail.

❑ Fit blanking plugs.

K4M

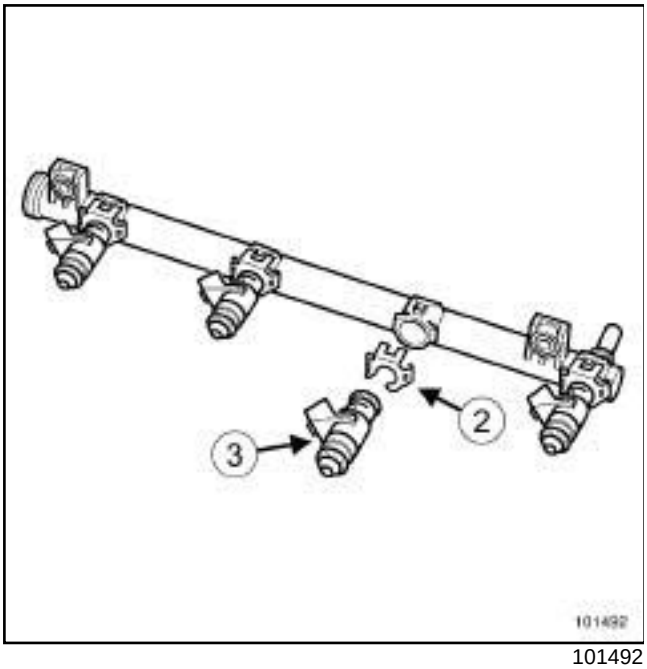

101492

❑ Remove:

- the clip (**2**) from each injector,
- the injectors (**3**) from the injector rail,
- the seals of each injector.

❑ Insert the blanking plugs.

REFITTING

I - REFITTING PREPARATION OPERATION

❑ **parts always to be replaced: injector clip on injector rail (11,04,04,10)**.

❑ **parts always to be replaced: injector seal (11,11, 02,02)**.

❑ Refit:

- new seals on each injector,
- the injectors on the injector rail,
- a new clip on each injector.

II - REFITTING OPERATION FOR PART CONCERNED

❑ Remove the blanking plugs.

❑ Connect:

- the supply pipe union on the injector rail,
- all injector connectors.

❑ Clip the injector wiring onto the « injector rail - injector » assembly.

❑ Refit the « injector rail - injector » assembly.

❑ Torque tighten the **bolts of the « injector rail - injector » assembly (10 N.m)**.

III - FINAL OPERATION

❑ Refit:

- the inlet manifold (see **12A**, **Fuel mixture**, **Inlet manifold: Removal - Refitting**, page **12A-23**) ,
- the throttle valve (see **12A**, **Fuel mixture**, **Throttle valve: Removal - Refitting**, page **12A-17**) ,
- the scoop under the scuttle panel grille (see **Scoop under scuttle panel grille: Removal - Refitting**) (56A, Exterior equipment),
- the scuttle panel grille (see **Scuttle panel grille: Removal - Refitting**) (56A, Exterior equipment),
- the windscreen wiper arms (see **Windscreen wiper arm: Removal - Refitting**) (85A, Wiping - Washing),
- the engine cover.

❑ Connect the battery (see **Battery: Removal - Refitting**) (80A, Battery).

❑ Apply the after repair procedure using the **diagnostic tool** :

- Connect the **diagnostic tool**,
- select « injection computer » ,
- go to repair mode,
- display the « before/after repair procedure » for the computer selected,
- select « Injector no. 1 » in the « List of components controlled by this computer » section,
- carry out the operations described in the « After repair procedure » section.

F4R

Tightening torques ▽	
injector rail bolts	**10 N.m**

IMPORTANT

During this operation, be sure to:

- refrain from smoking or bringing red hot objects close to the working area,
- be careful of fuel splashes when disconnecting the union.

IMPORTANT

Wear leaktight gloves (Nitrile type) for this operation.

IMPORTANT

Wear goggles with side protectors for this operation.

REMOVAL

I - REMOVAL PREPARATION OPERATION

❏ Disconnect the battery (see **Battery: Removal - Refitting**) (80A, Battery).

❏ Remove the front engine cover.

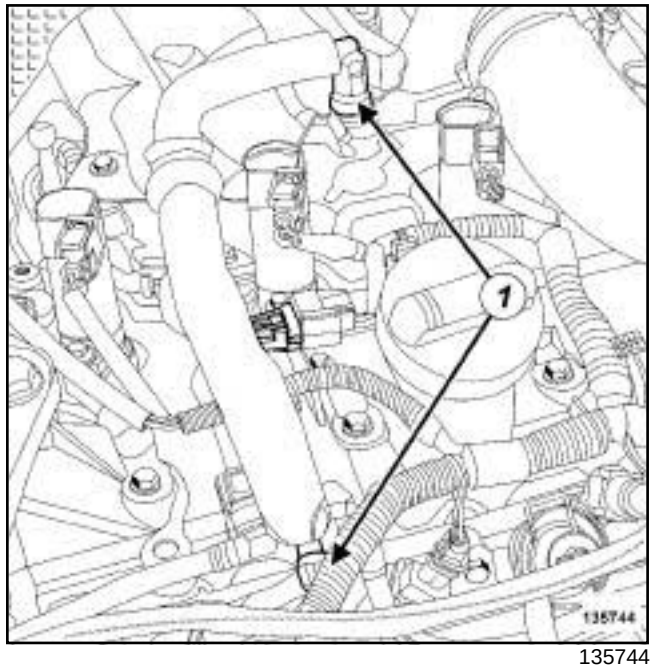

135744

❏ Disconnect the connectors (**1**) from the oil vapour rebreathing pipe.

❏ Remove the oil vapour rebreathing pipe.

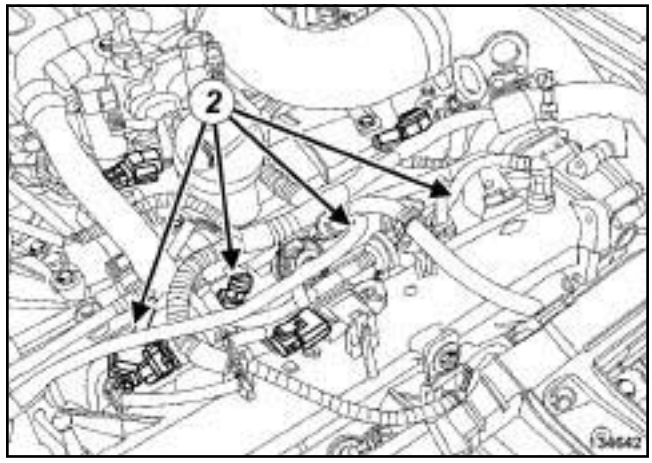

134642

❏ Disconnect the injector connectors (**2**) .

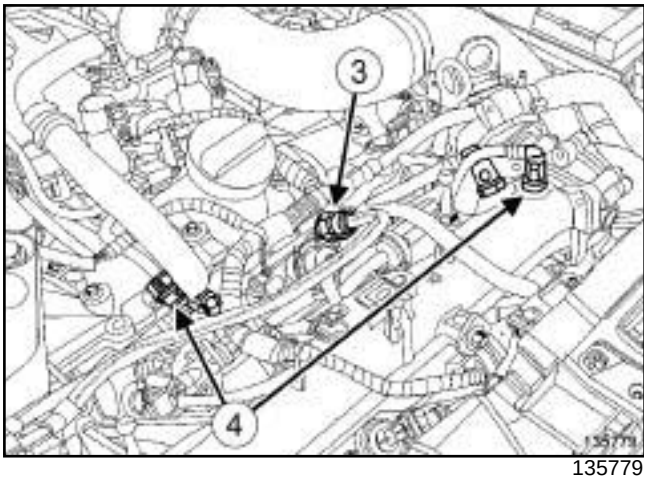

135779

❑ Disconnect:

- the fuel supply pipe (**3**) on the injector rail,
- the petrol vapour rebreathing pipe (**4**) .

❑ Remove the petrol vapour rebreathing pipe.

II - OPERATION FOR REMOVAL OF PART CONCERNED

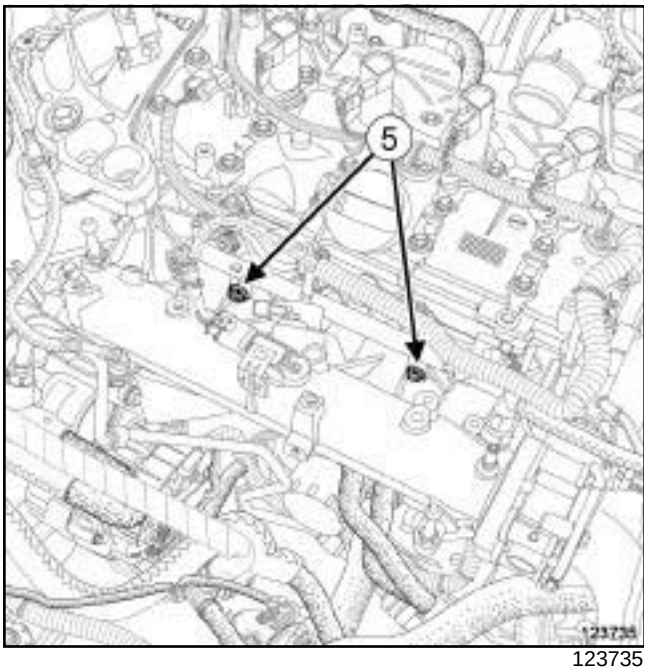

123735

❑

IMPORTANT
Be careful when removing the injectors or the injection rail as there will be a quantity of fuel in the rail and the union.

Remove:

- the bolts (**5**) of the injector rail - injector assembly,
- the injector rail - injector assembly.

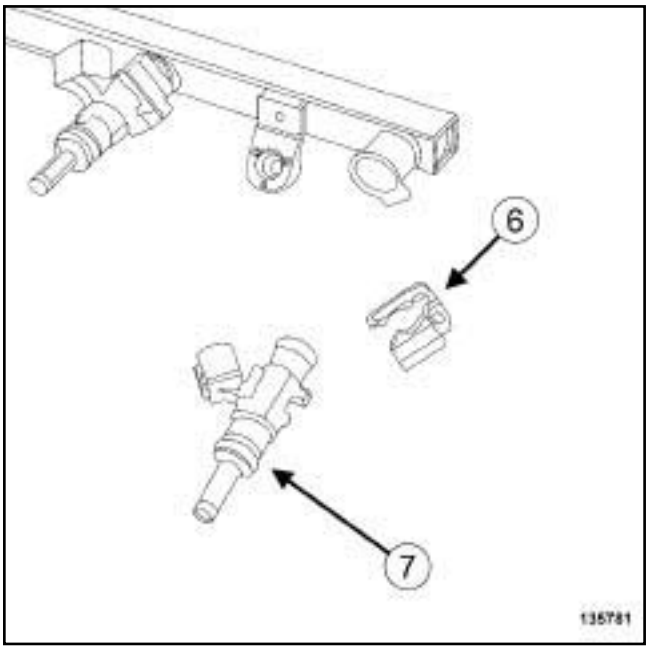

135781

❑ Remove:

- the clip (**6**) from each injector,
- the injectors (**7**) .

REFITTING

I - REFITTING PREPARATION OPERATION

❑ Always replace the injector seals.

❑ Refit:

- new injector seals,
- the injectors.

II - REFITTING OPERATION FOR PART CONCERNED

❑ Refit the injector rail.

❑ Torque tighten the **injector rail bolts (10 N.m)**.

III - FINAL OPERATION

❑ Refit the petrol vapour rebreathing pipe.

❑ Connect:

- the fuel supply pipe to the injector rail,
- the injector connectors.

❑ Refit:

- the oil vapour rebreathing pipe,
- the engine cover.

F4R

❑ Connect the battery.

Engine cooling circuit: Specifications

Vehicles in the current range have cooling systems with the following basic specifications:

- hermetically-sealed pressurised circuit (expansion chamber valve),
- circuit using a “D” type coolant,
- passenger compartment heating systems equipped with a "heater matrix" type radiator located under the dashboard which helps to cool the engine.

Volume of coolant

Engine	Quantity (litres)	Grade
K4M 848	5.3 l	**GLACEROL RX** (type D) Only use coolant
K4M 858	5.3 l	
K4M 866	5.3 l	
F4R 870	6.5 l	
K9K 830	6.5 l	
K9K832	6.5 l	
K9K 834	6.5 l	
F9Q 870	6.3 l	
F9Q 872	6.3 l	

Special notes:

- protection down to **-25°C ± 2** for cold and temperate countries,
- protection down to **-37°C ± 2** for very cold countries.

thermostat

Engine	Start of opening (°C)	End of opening (°C)
K4M 848	**89**	**99 ± 2**
K4M 858	**89**	**99 ± 2**
K4M 866	**89**	**99 ± 2**
F4R 870	**83**	**95**
K9K 830	**83**	**95**
K9K832	**83**	**95**
K9K 834	**83**	**95**
F9Q 870	**83**	**95**
F9Q 872	**83**	**95**

Essential special tooling	
Mot. 1700	Fault finding and filling-bleeding cooling system.
Ms. 554-07	Cooling system tester kit (complete). Contains plugs 554-01, 554-04, 554-06
Ms. 554-06	Spare cap for testing expansion bottle valves (2nd fitting).
Ms. 554-01	Spare expansion bottle adapter cap.

IMPORTANT

When working in the engine compartment, take care as the radiator fan(s) may start up unexpectedly (risk of being cut).

To avoid any risk of serious burns when the engine is hot:

- do not open the expansion bottle cap,
- do not drain the cooling system,
- do not open the bleed screw(s).

Note:

There are two procedures for checking the cooling system:

- the procedure using the **(Mot. 1700)**
- the procedure using the **(Ms. 554-07)**.

INTRODUCTION

Expansion bottle cap valve rating

Colour of hand on the expansion bottle cap	Valve rating
Yellow	**1.4 bar**

I - CHECKING THE COOLING CIRCUIT USING THE (MOT. 1700)

❑

WARNING

If the coolant is leaking from the expansion bottle cap, replace the valve.

1 - Checking the expansion bottle cap valve

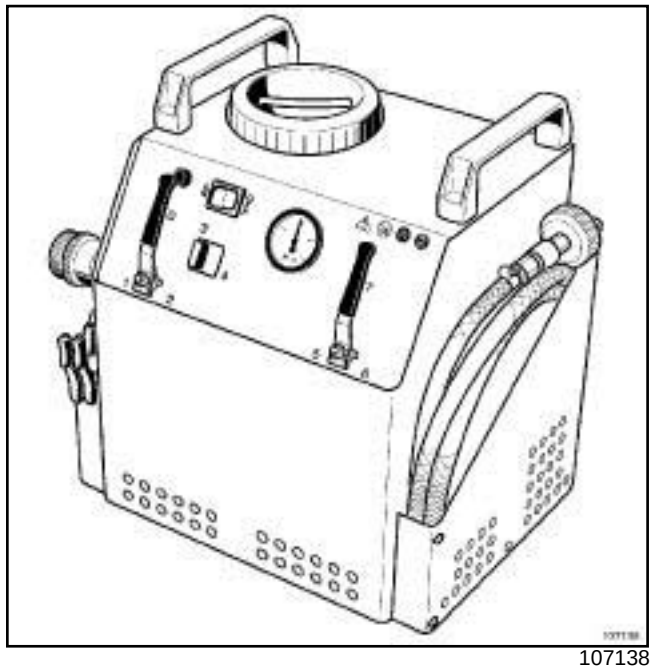

107138

❑ Use the cooling system filling and diagnostic tool **(Mot. 1700)**. Consult the user's manual for this tool (see **Cooling system filling and diagnostic tool: Use**) (Technical Note 3857A, 19A, Cooling).

2 - Checking the sealing of the cooling circuit

❑ Use the cooling system filling and diagnostic tool **(Mot. 1700)**. Consult the user's manual for this tool (see **Cooling system filling and diagnostic tool: Use**) (Technical Note 3857A, 19A, Cooling).

II - CHECKING THE COOLING CIRCUIT USING THE (MS. 554-07)

❑

WARNING

If the coolant is leaking from the expansion bottle cap, replace the valve.

1 - Checking the expansion bottle cap valve

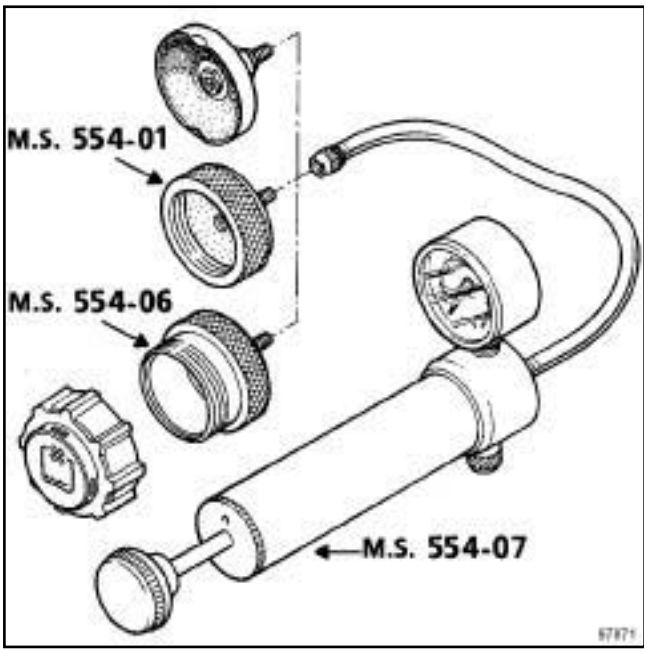

97871

- Fit the test tool **(Ms. 554-07)** with an adapter **(Ms. 554-06)**.
- Fit the expansion bottle cap onto the adapter **(Ms. 554-06)**.

> Note:
>
> The pressure should not drop; if it does, look for the leak.

- Pump with the **(Ms. 554-07)**, the pressure should stabilise at the expansion bottle cap valve rating with a test tolerance of ± **0.1 bar.**

2 - Checking the sealing of the cooling circuit

- Replace the expansion bottle cap with the adapter **(Ms. 554-01)**.
- Connect the adapter **(Ms. 554-01)** to the **(Ms. 554-07)**.
- Use the tool as a pump to pressurise the cooling system.
- Stop pumping at **0.1 bar** below the valve rating for the expansion bottle cap valve.

> Note:
>
> The pressure should not drop; if it does, look for the leak.

- Gradually undo the union of the **(Ms. 554-07)** to decompress the cooling system and then remove the adapter **(Ms. 554-01)** and refit the expansion bottle cap.

K9K

K9K, and 830 or 832

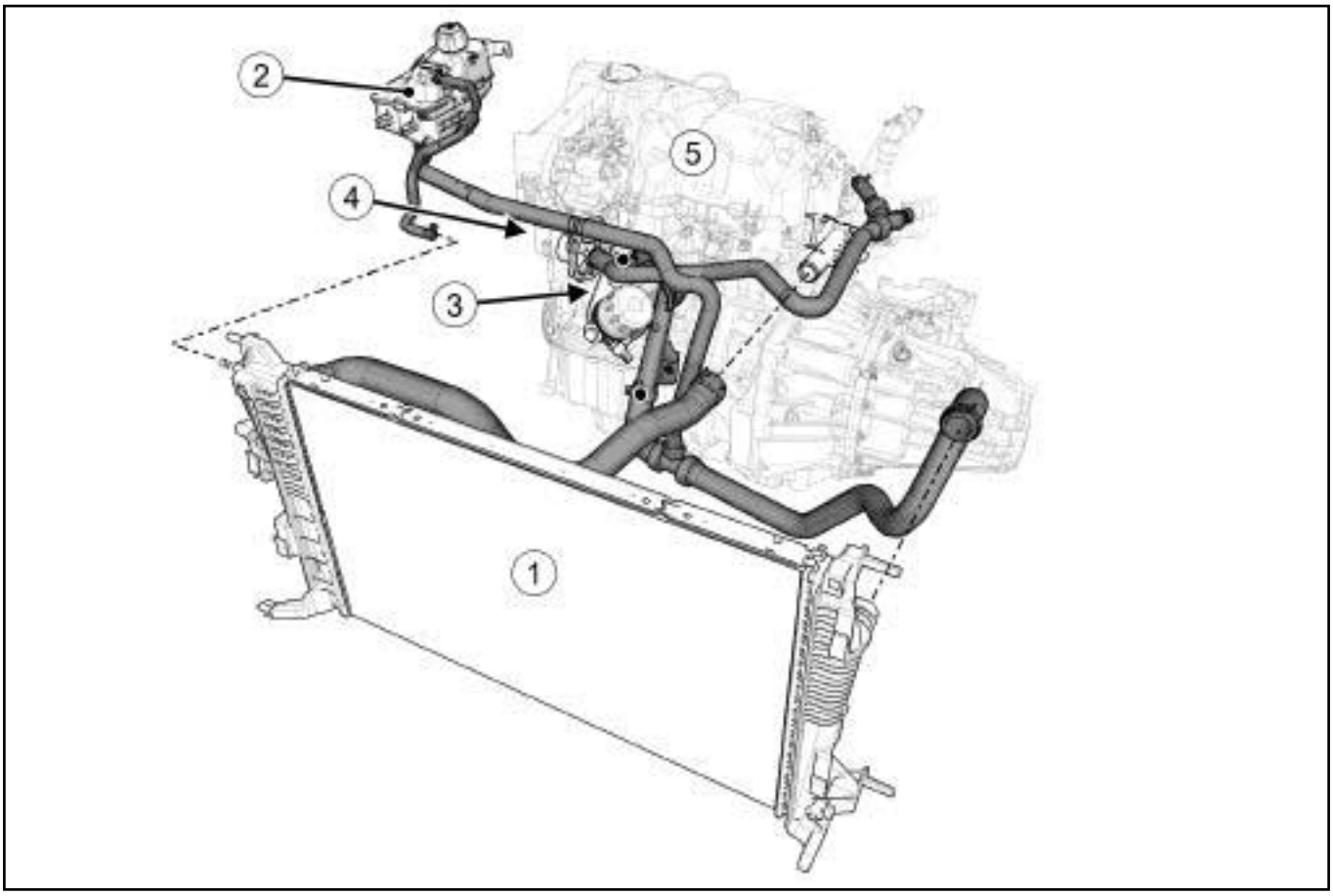

135555

K9K

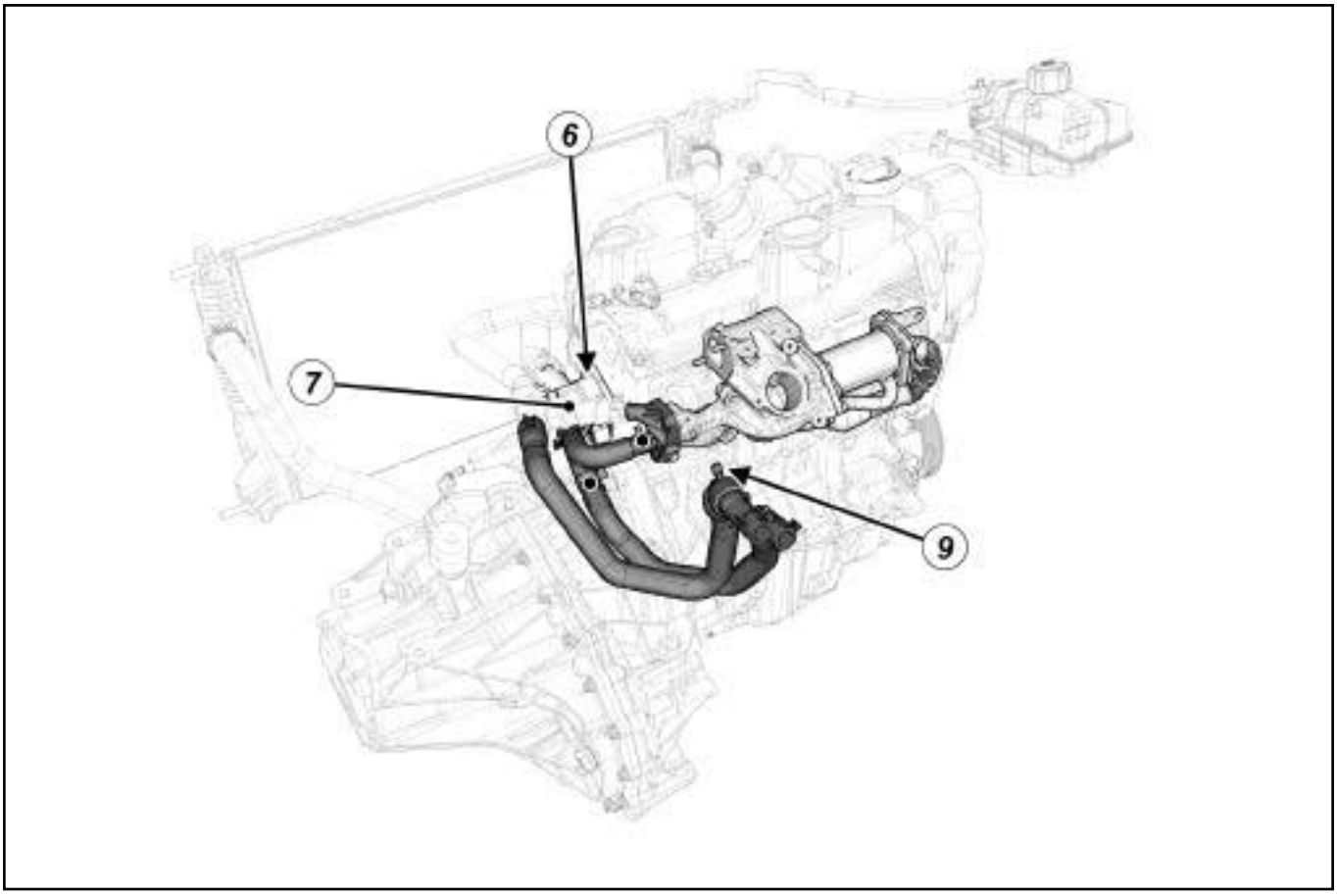

135558

K9K

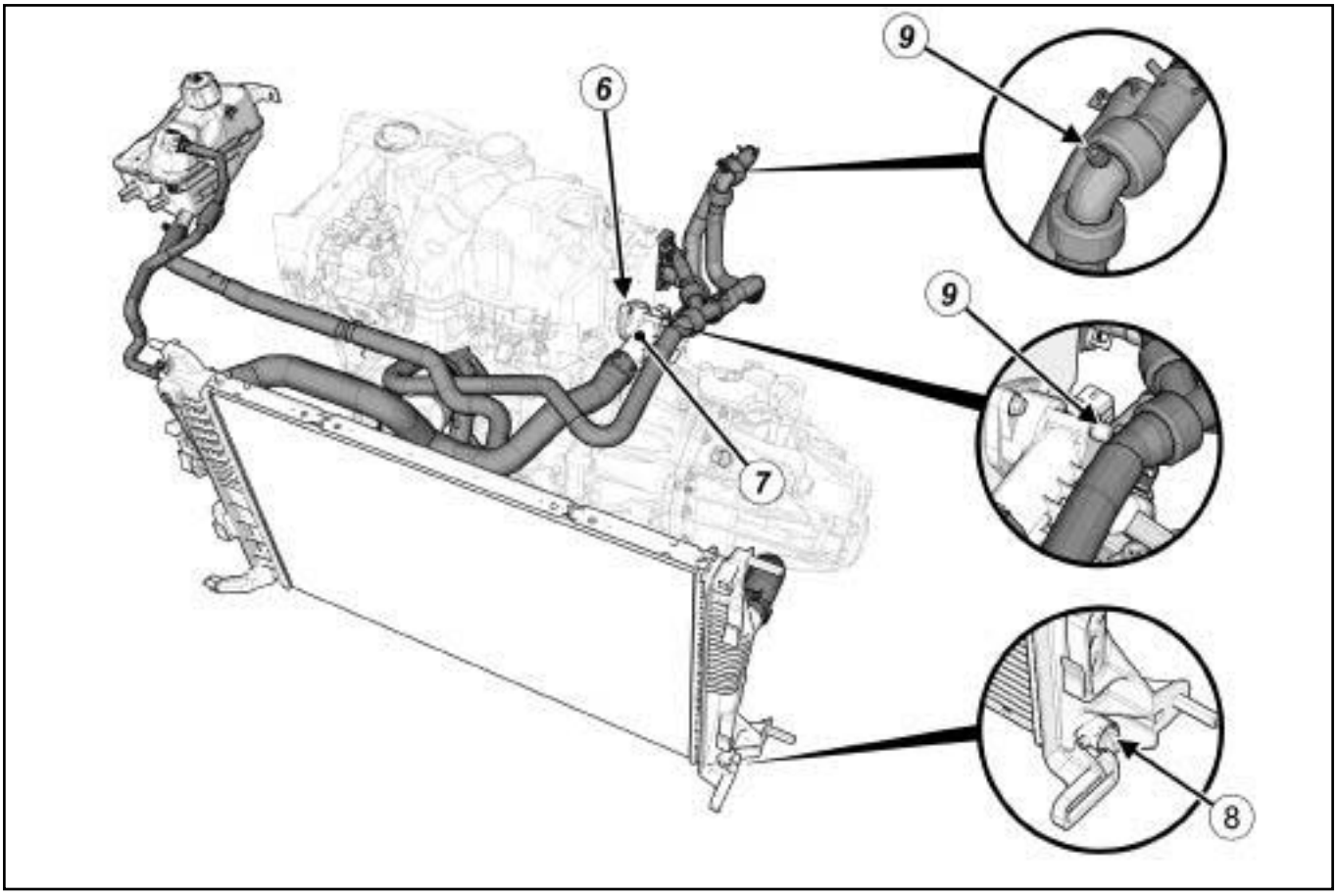

135560

(**1**)	Cooling radiator
(**2**)	Expansion bottle
(**3**)	Water-oil heat exchanger
(**4**)	Water pump
(**5**)	Engine
(**6**)	Thermostat
(**7**)	Coolant outlet unit
(**8**)	Drain plug
(**9**)	Bleed screws

K9K

K9K, and 834

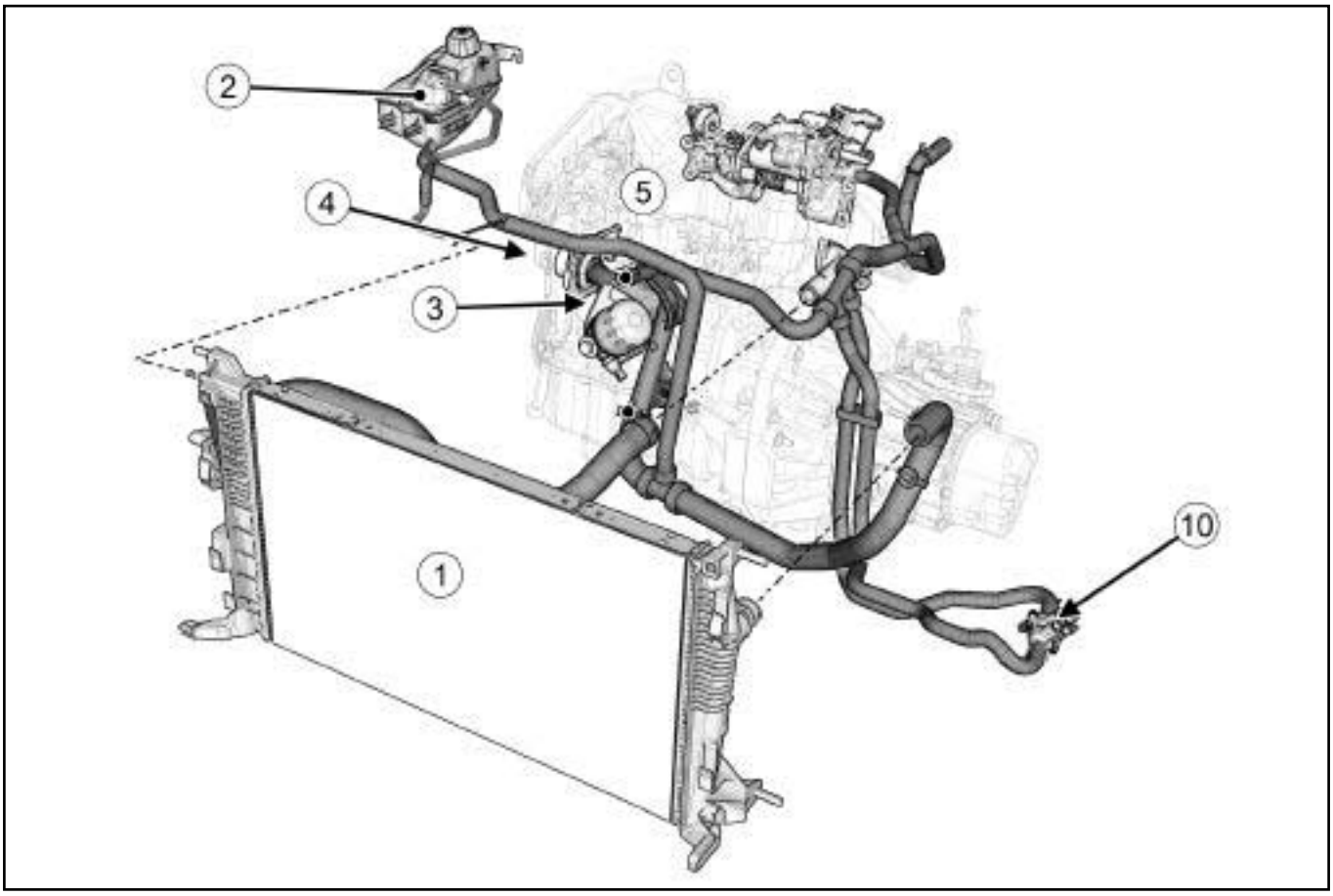

135561

K9K

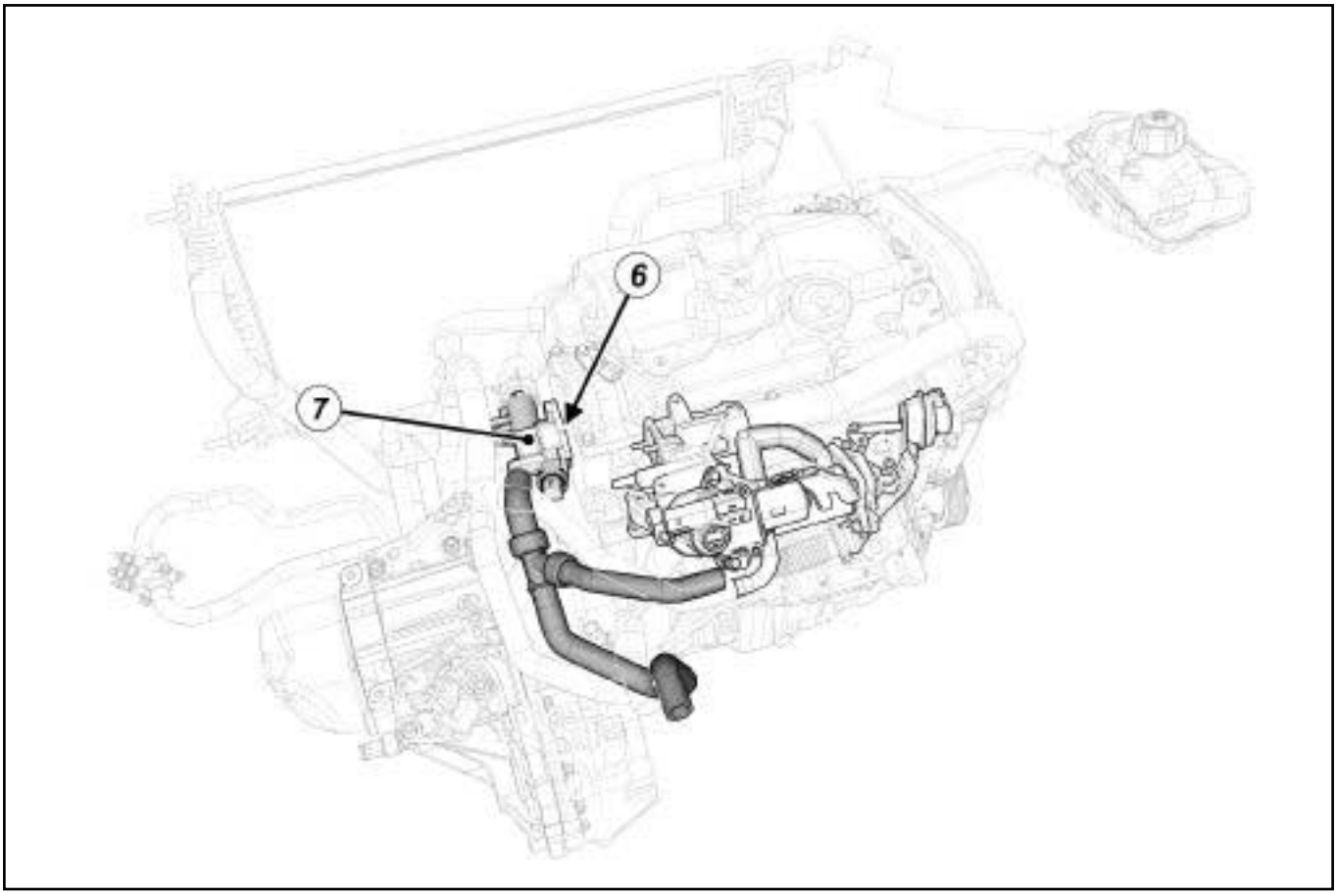

135564

K9K

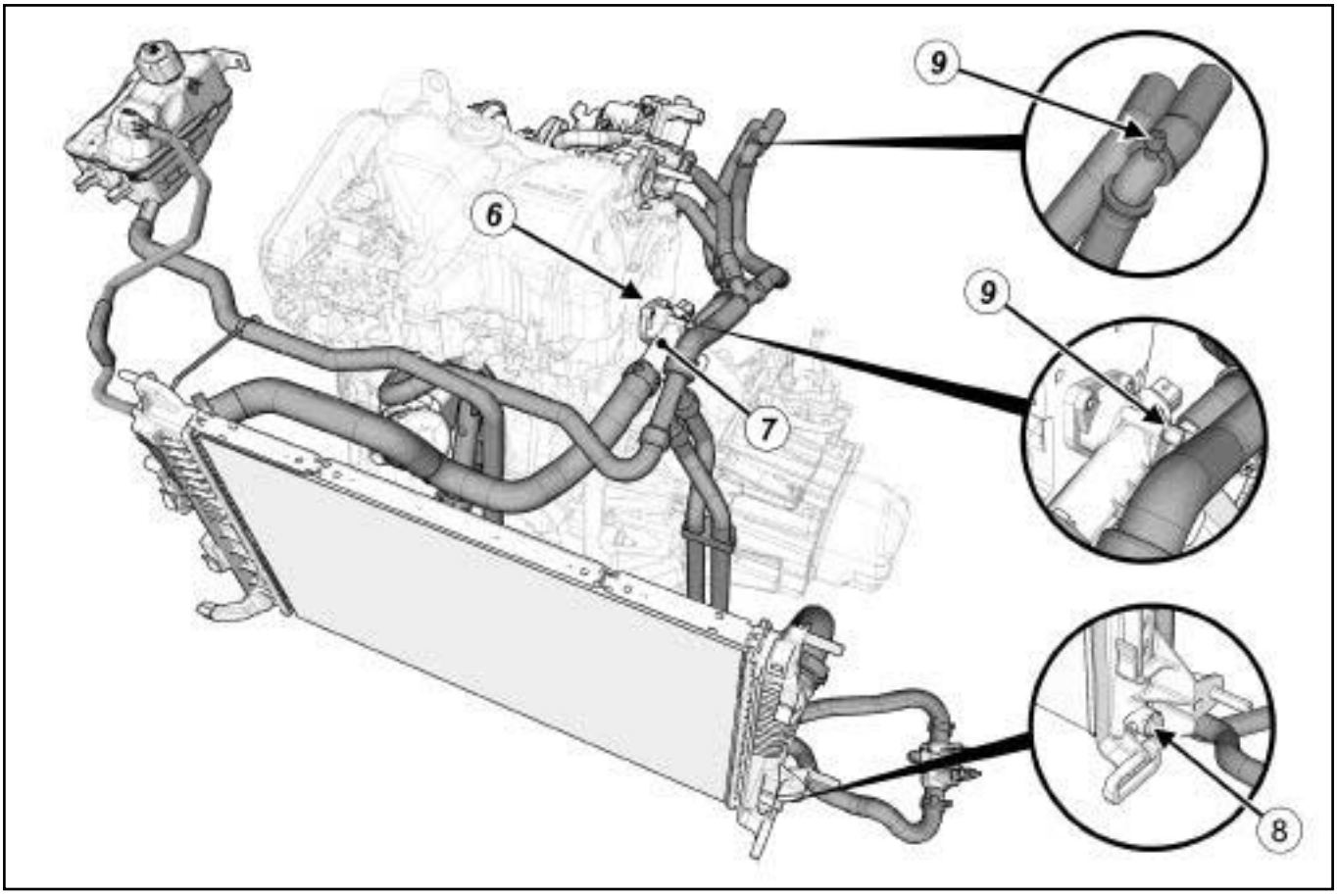

135566

(**1**)	Cooling radiator
(**2**)	Expansion bottle
(**3**)	Water-oil heat exchanger
(**4**)	Water pump
(**5**)	Engine
(**6**)	Thermostat
(**7**)	Coolant outlet unit
(**8**)	Drain plug
(**9**)	Bleed screws
(**10**)	Thermoplunger unit

K4M

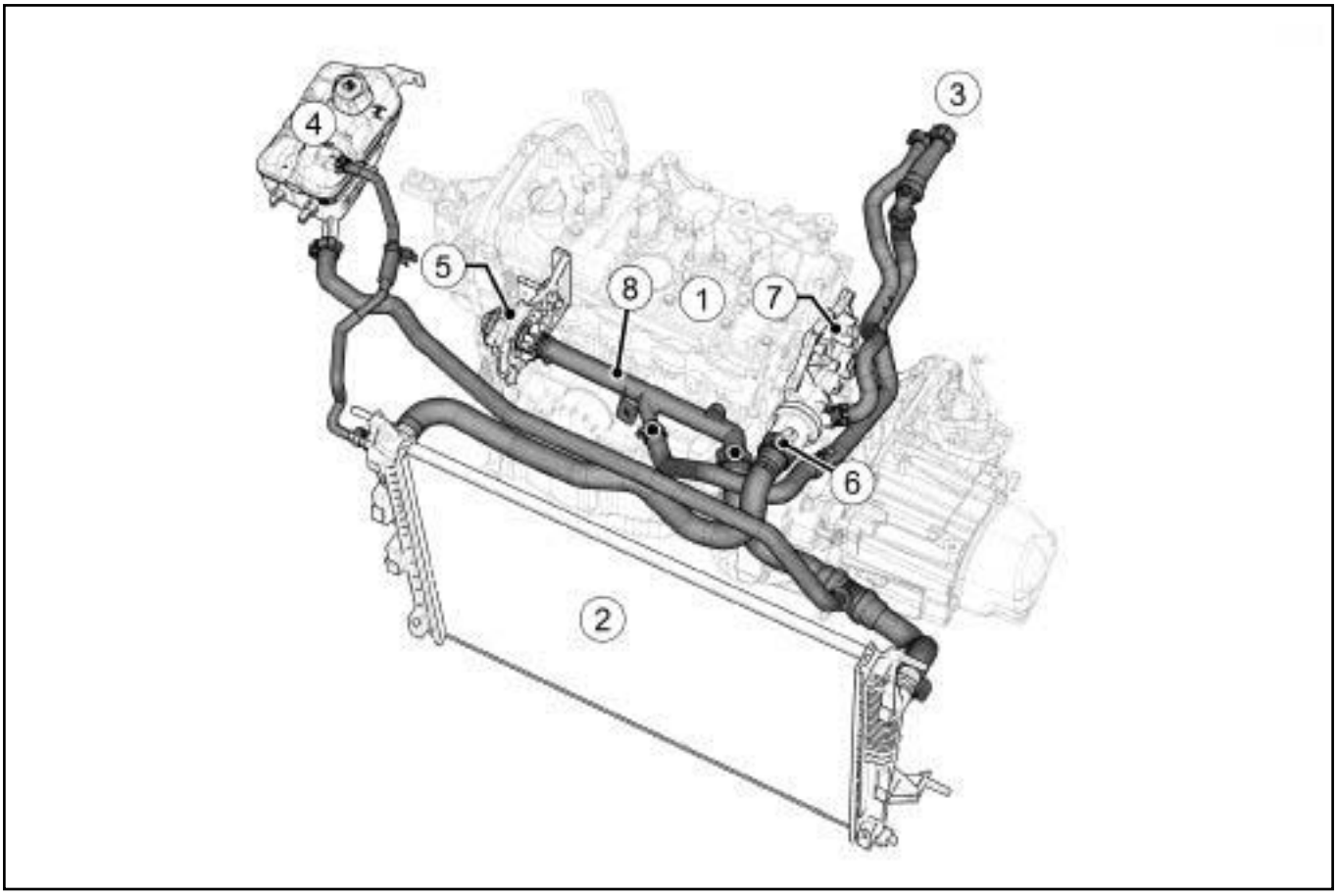

135517

(**1**)	Engine
(**2**)	Cooling radiator
(**3**)	Heater matrix
(**4**)	Expansion bottle
(**5**)	Water pump
(**6**)	Thermostat
(**7**)	Coolant outlet unit
(**8**)	Coolant pump inlet pipe

K4M

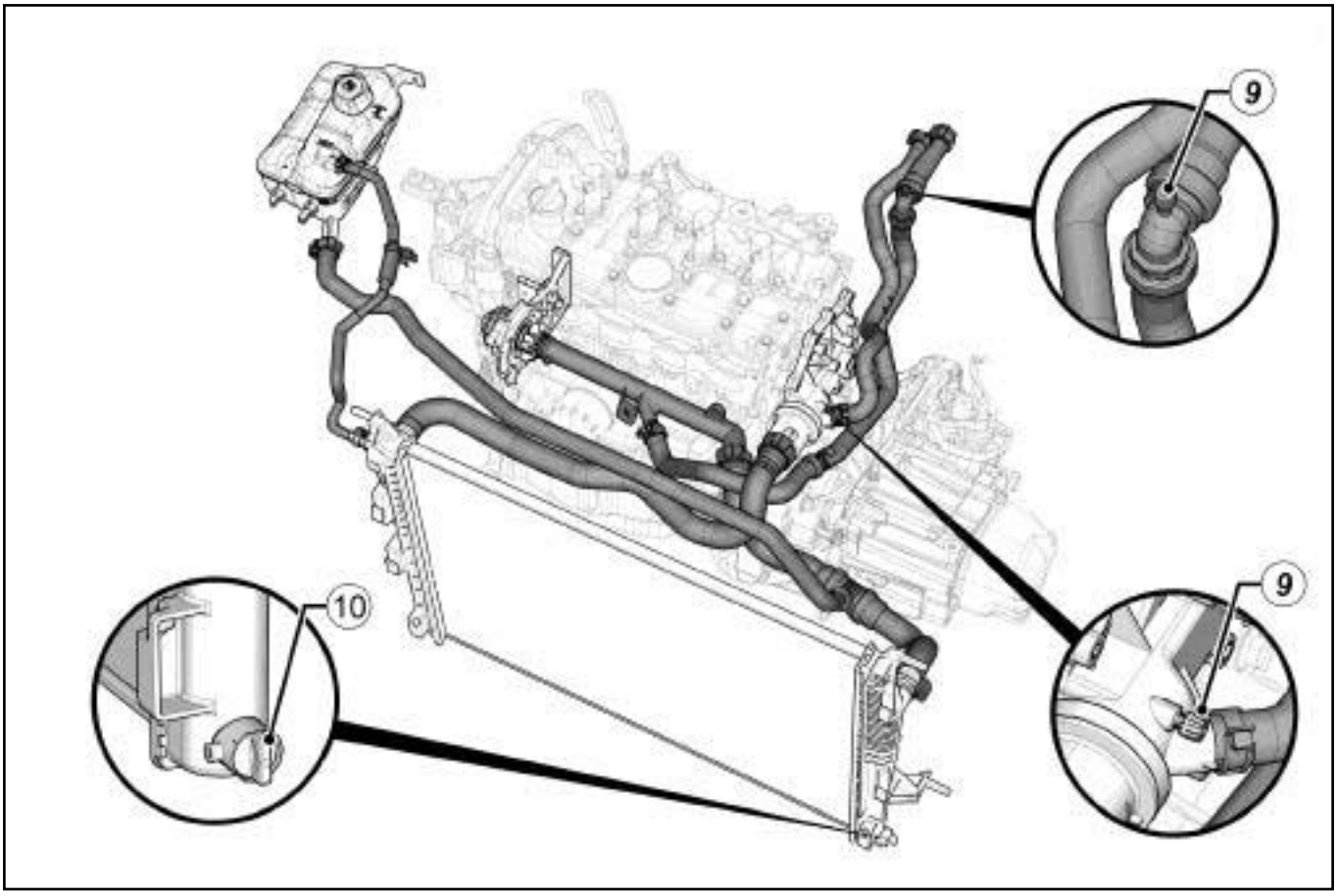

135518

(**9**)	Bleed screw
(**10**)	Drain plug

F4R

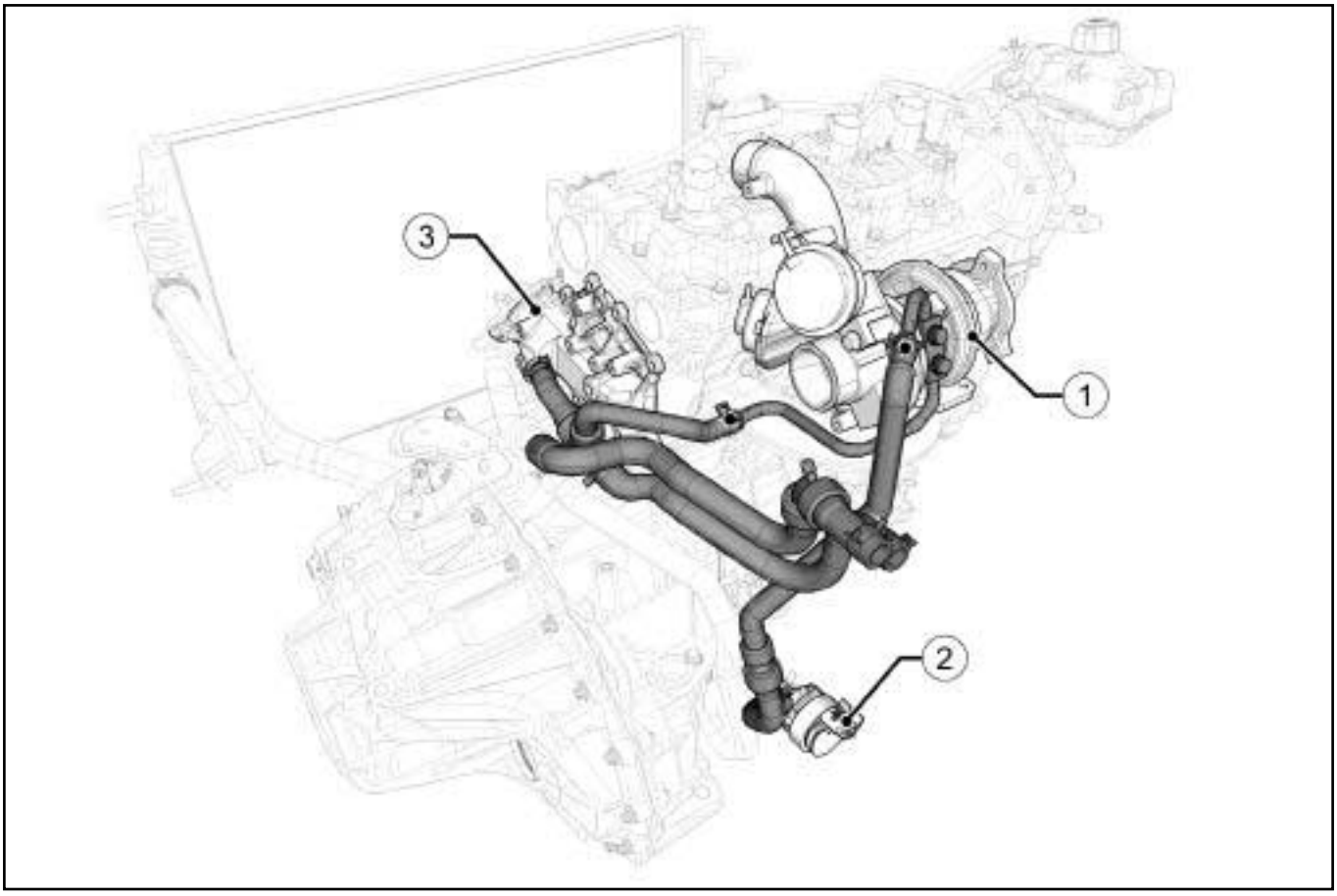

135611

(**1**)	Turbocharger
(**2**)	Electric coolant pump
(**3**)	Coolant outlet unit

F4R

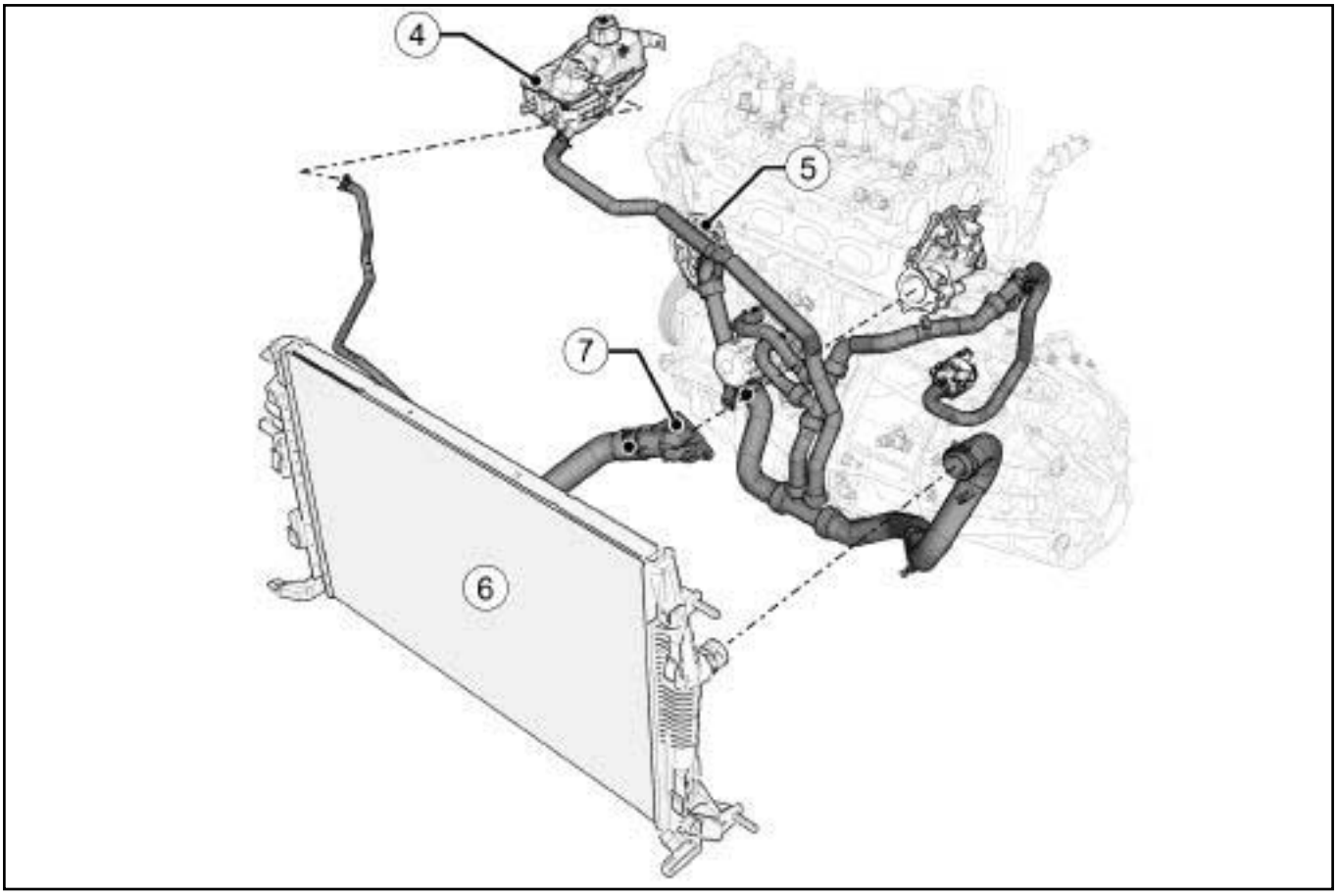

135612

(**4**)	Expansion bottle
(**5**)	Water pump
(**6**)	Radiator
(**7**)	Thermostat

F4R

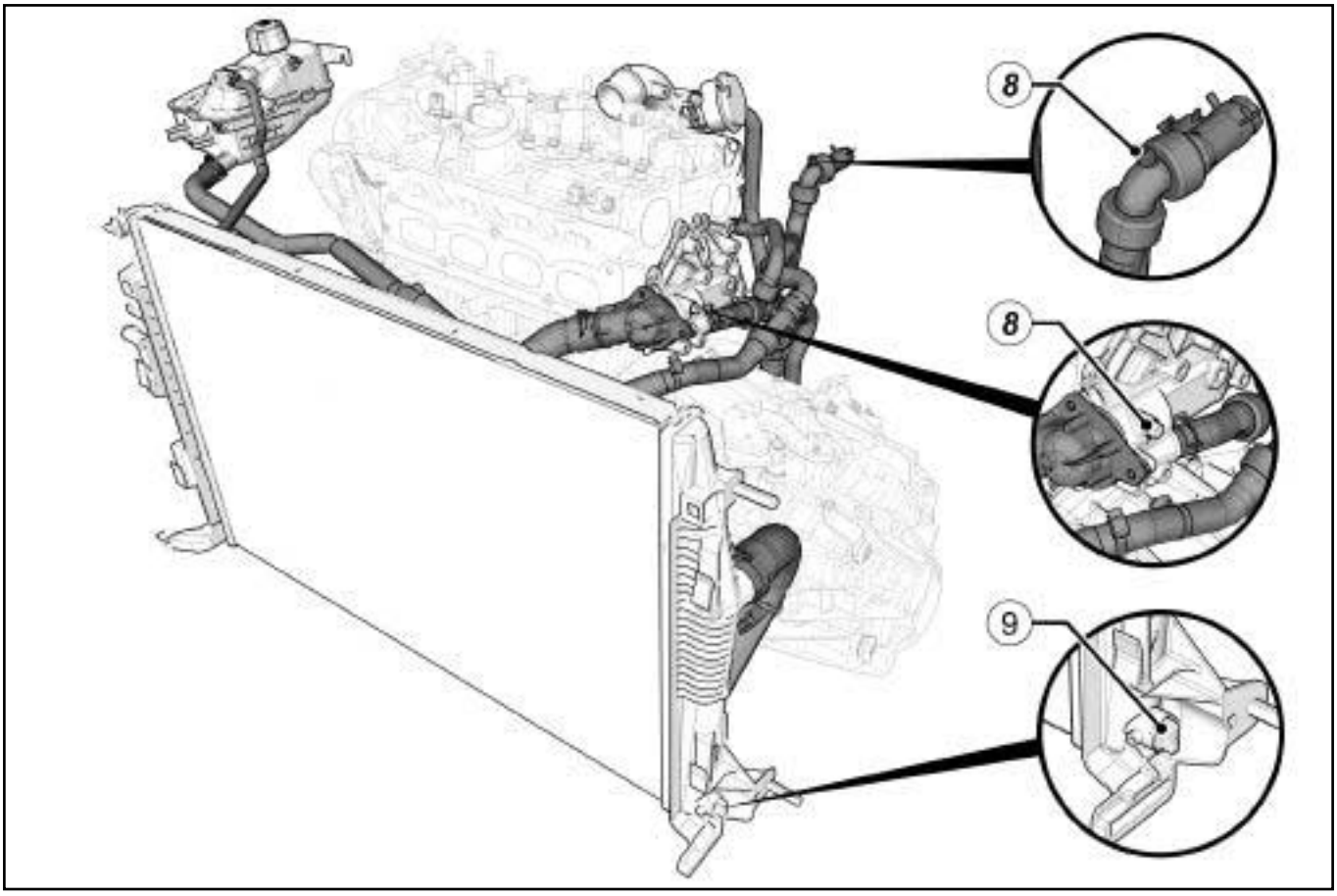

135613

(**8**)	Bleed screw
(**9**)	Drain plug

F9Q

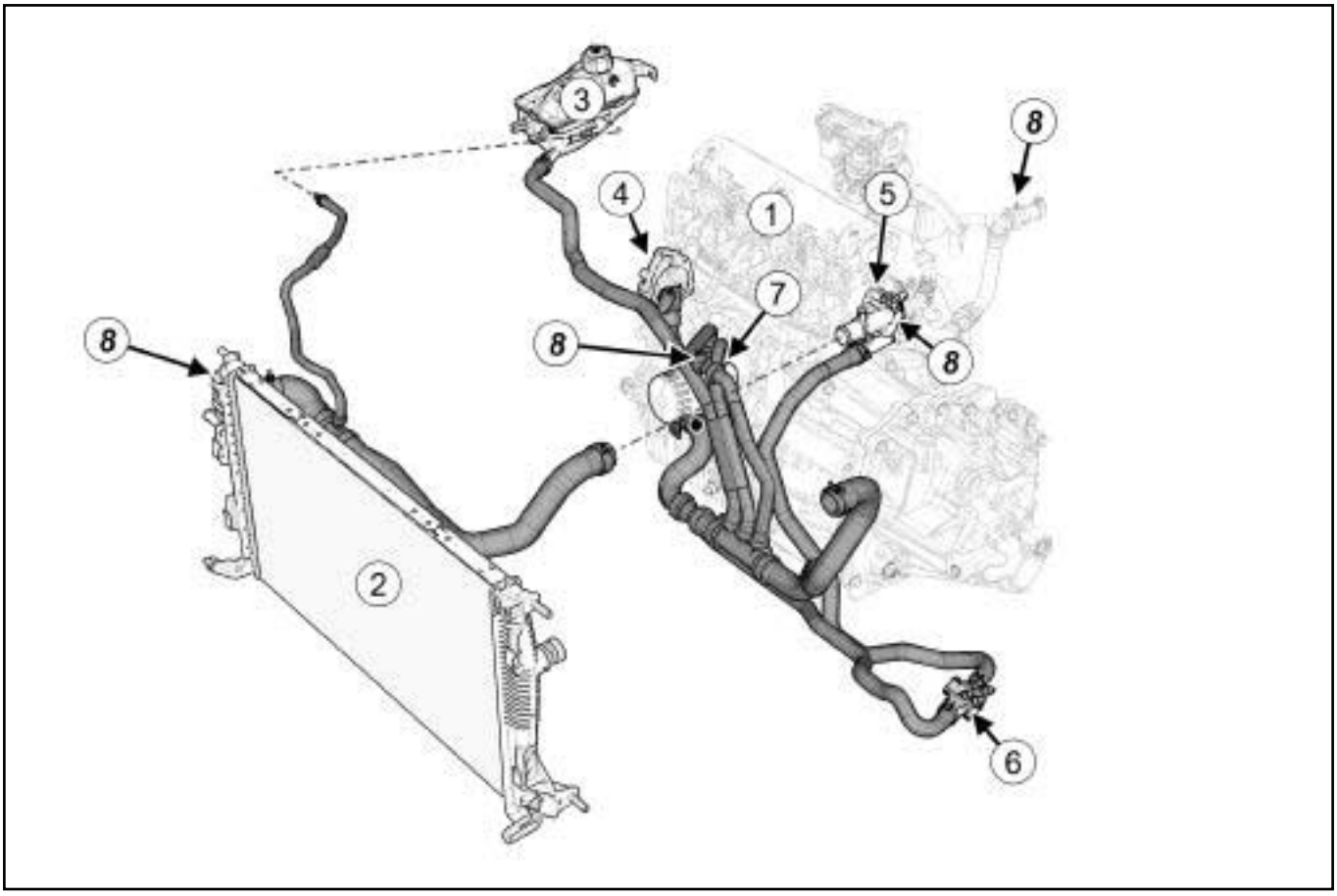

135424

(**1**)	Engine
(**2**)	Radiator
(**3**)	Expansion bottle
(**4**)	Water pump
(**5**)	Coolant outlet unit
(**6**)	Thermoplunger unit (F9Q 870)
(**7**)	Water-oil heat exchanger
(**8**)	Bleed screws

F9Q

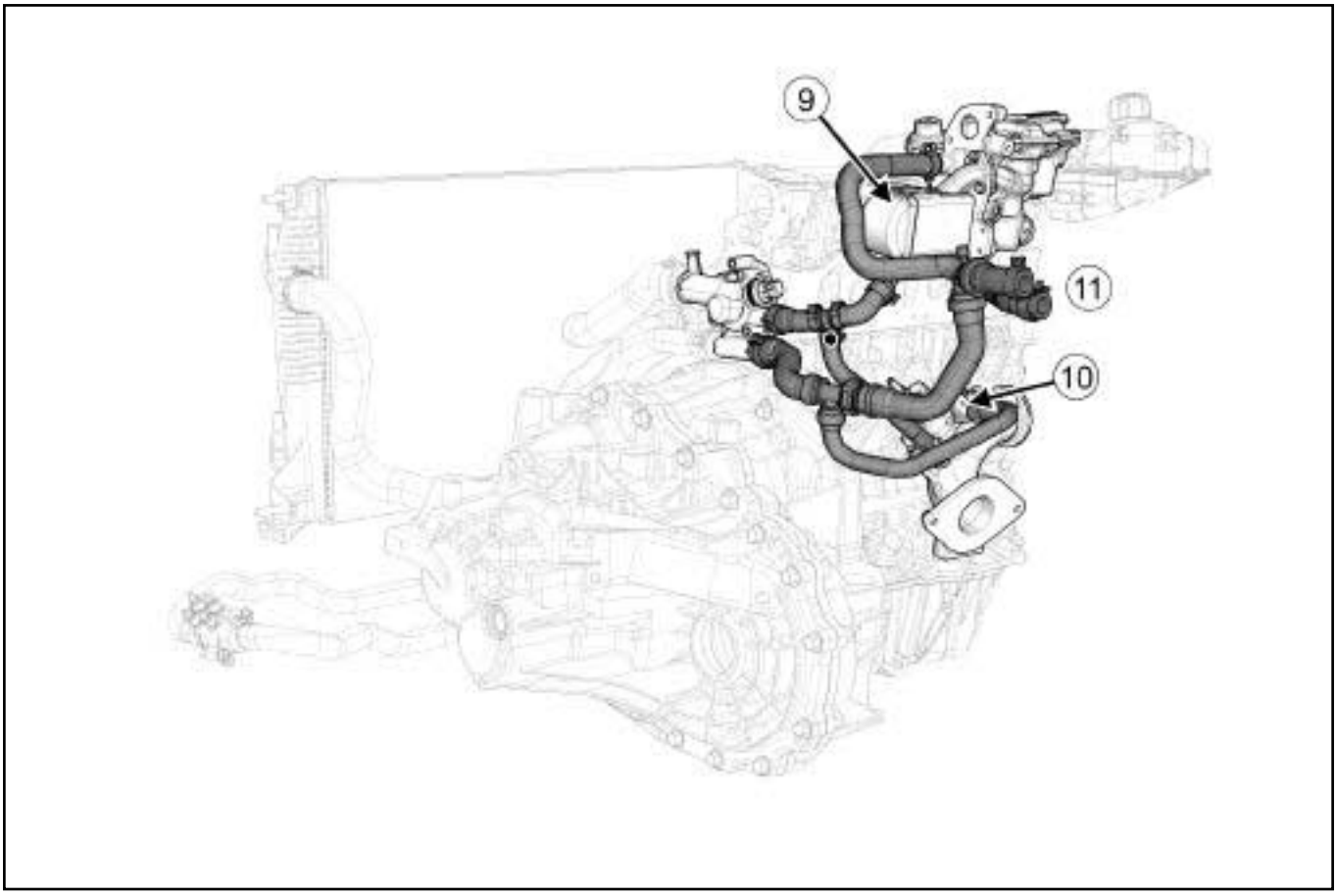

135423

(**9**)	Intercooler
(**10**)	Exhaust fuel injector cooler (F9Q 870)
(**11**)	Heater matrix

K4M

Essential special tooling	
Mot. 1700	Fault finding and filling-bleeding cooling system.
Ms. 554-07	Cooling system tester kit (complete). Contains plugs 554-01, 554-04, 554-06

Essential equipment
coolant draining tray
compressed air nozzle
pedal press

IMPORTANT

When working in the engine compartment, take care as the radiator fan(s) may start up unexpectedly (risk of being cut).

To avoid any risk of serious burns when the engine is hot:

- do not open the expansion bottle cap,
- do not drain the cooling system,
- do not open the bleed screw(s).

WARNING

Before the operation, protect the electrical accessories to prevent any risk of short circuiting and protect the belts to avoid damaging them.

DRAINING

❑ Position the vehicle on a two-post lift (see **Vehicle: Towing and lifting**) (02A, Lifting equipment).

❑ Remove:

- the engine cover,
- the expansion bottle cap,
- the front wheels (see **Wheel: Removal - Refitting**) (35A, Wheels and tyres),
- the front section of the front wheel arch liners (see **Front wheel arch liner: Removal - Refitting**) (55A, Exterior protection),
- the engine undertray bolts,
- the engine undertray.
- the front bumper (see **Front bumper: Removal - Refitting**) (55A, Exterior protection),

❑ Position the **coolant draining tray** under the vehicle.

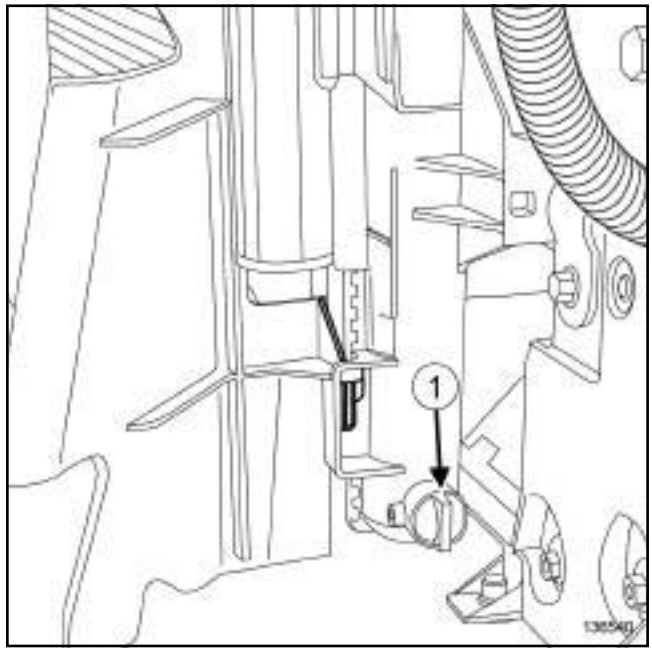

136540

❑ Open the drain plug (**1**) for the radiator cooling system.

❑ Use a **compressed air nozzle** to blow air into the system through the expansion bottle opening to remove as much coolant as possible.

CLEANING

❑ Fill the cooling system with water through the expansion bottle.

❑ Let the water run until the water collected by the cooling radiator bottom hose becomes clear.

❑ Use a **compressed air nozzle** to blow air into the circuit through the expansion bottle opening to remove as much water as possible.

❑ Close the drain plug of the radiator cooling system.

K4M

FILLING

❑

> Note:
>
> There are two procedures for filling the cooling system:
>
> - the procedure using the tool **(Mot. 1700)** recommended by Renault. It saves a considerable amount of time because it does not require the cooling system bleed screws to be opened,
> - the procedure without a special tool.

1 - Filling procedure with the tool (Mot. 1700)

❑ Fill the cooling system with engine coolant recommended by the manufacturer (see **Vehicle: Parts and ingredients for the repairwork**) (04B, Consumables - Products) using the tool **(Mot. 1700)**. Consult the user's manual for this tool (see **Cooling system filling and diagnostic tool: Use**) (Technical Note 3857A, 19A, Cooling).

2 - Filling procedure without a special tool

❑

> **WARNING**
>
> It is essential to open all of the bleed screws to remove as much as air as possible in the cooling system. Failure to perform this procedure may prevent the cooling system from filling properly and may damage the engine.

Method to access the bleed screws on the heater matrix hose and on the coolant outlet unit

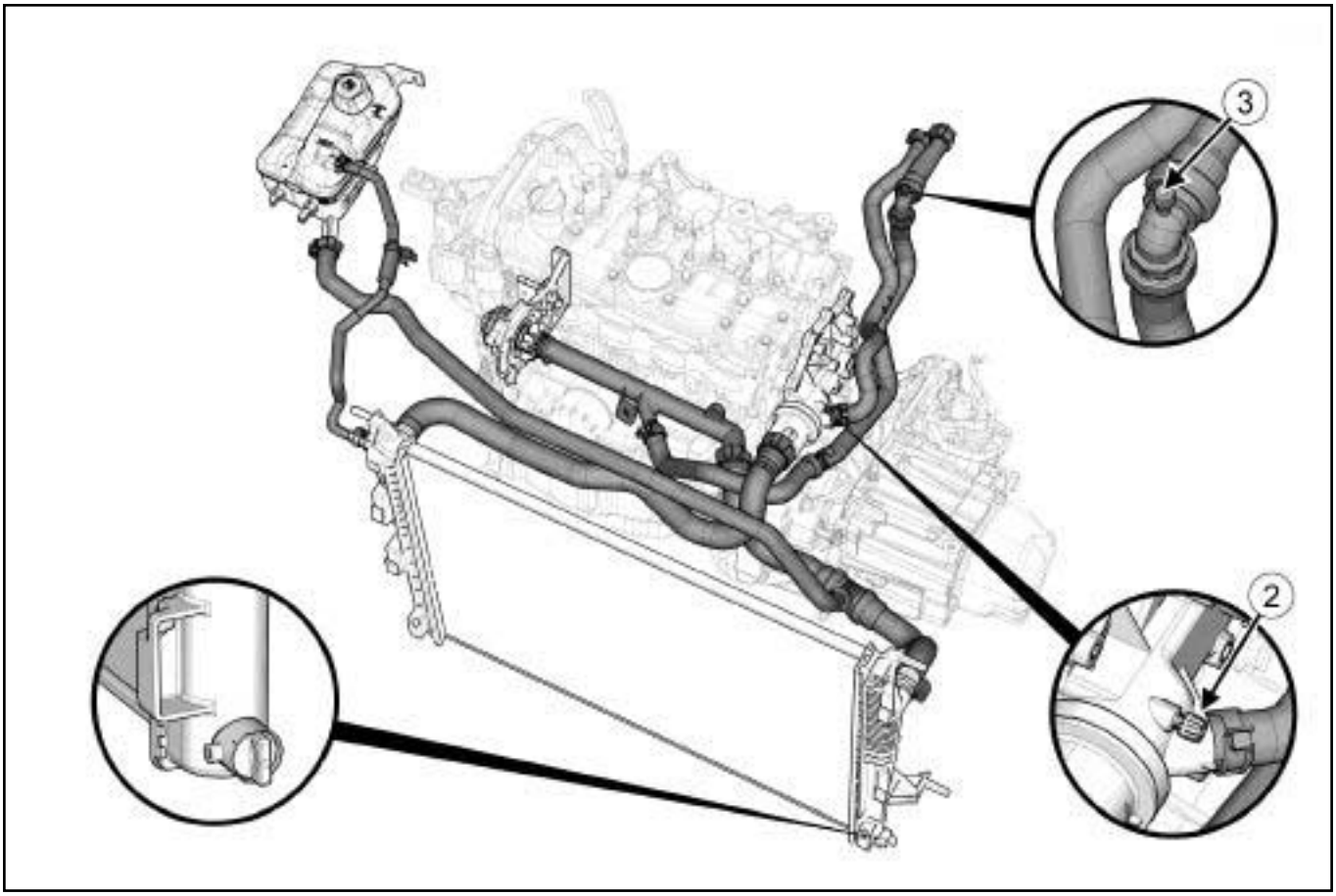

135518

❑ Remove:

- the bleed screw (**2**) of the coolant outlet unit,
- the bleed screw (**3**) of the heater matrix hose.

❑ Fill the cooling system with engine coolant recommended by the manufacturer (see **19A**, **Cooling**, **Engine cooling circuit: Specifications**, page **19A-**

1) and (see **Vehicle: Parts and ingredients for the repairwork**) (04B, Consumables - Products) via the expansion bottle until it overflows.

- ❑ Close all the bleed screws as soon as the coolant starts to flow in a continuous stream.
- ❑ Pressurise the system using the **(Ms. 554-07)** to check that there are no leaks (see **19A**, **Cooling**, **Engine cooling circuit: check**, page **19A-2**) .
- ❑ Fill the expansion bottle until it overflows.
- ❑ Tighten the expansion bottle cap.
- ❑ Clean any surfaces soiled by the coolant.

BLEEDING

- ❑

> **WARNING**
> Do not open the bleed screw whilst the engine is running; this would damage the engine.

- ❑ Deactivate the air conditioning system so that the fan assembly is not operating from the start of the operation.
- ❑ Start the engine.
- ❑ Maintain the engine speed at **2500 rpm** using a **pedal press**, until the fan assembly starts for the second time.
- ❑ Check that the heating is operating correctly.
- ❑ Allow the engine to cool until the coolant temperature is less than **50°C**.
- ❑ Make sure the coolant fluid level is at the « Maximum » mark.
- ❑ Refit the expansion bottle cap.

FINAL OPERATION

- ❑ Remove the **coolant draining tray**.
- ❑ Refit:
  - the front bumper (see **Front bumper: Removal - Refitting**) (55A, Exterior protection),
  - the front section of the front wheel arch liners (see **Front wheel arch liner: Removal - Refitting**) (55A, Exterior protection),
  - the front wheels (see **Wheel: Removal - Refitting**) (35A, Wheels and tyres),
  - the engine undertray,
  - the engine cover.

K9K

Essential special tooling	
Mot. 1700	Fault finding and filling-bleeding cooling system.
Ms. 554-07	Cooling system tester kit (complete). Contains plugs 554-01, 554-04, 554-06

Essential equipment
coolant draining tray
compressed air nozzle

IMPORTANT
When working in the engine compartment, take care as the radiator fan(s) may start up unexpectedly (risk of being cut).

To avoid any risk of serious burns when the engine is hot:

- do not open the expansion bottle cap,

- do not drain the cooling system,

- do not open the bleed screw(s).

WARNING
Before the operation, protect the electrical accessories to prevent any risk of short circuiting and protect the belts to avoid damaging them.

DRAINING

❑ Position the vehicle on a two-post lift (see **Vehicle: Towing and lifting**) (02A, Lifting equipment).

❑ Remove:

- the engine cover,
- the expansion bottle cap,
- the front wheels (see **Wheel: Removal - Refitting**) (35A, Wheels and tyres),
- the front sections of the front wheel arch liners (see **Front wheel arch liner: Removal - Refitting**) (55A, Exterior protection),
- the engine undertray bolts,
- the engine undertray.
- the front bumper (see **Front bumper: Removal - Refitting**) (55A, Exterior protection),

❑ Position the **coolant draining tray** under the vehicle.

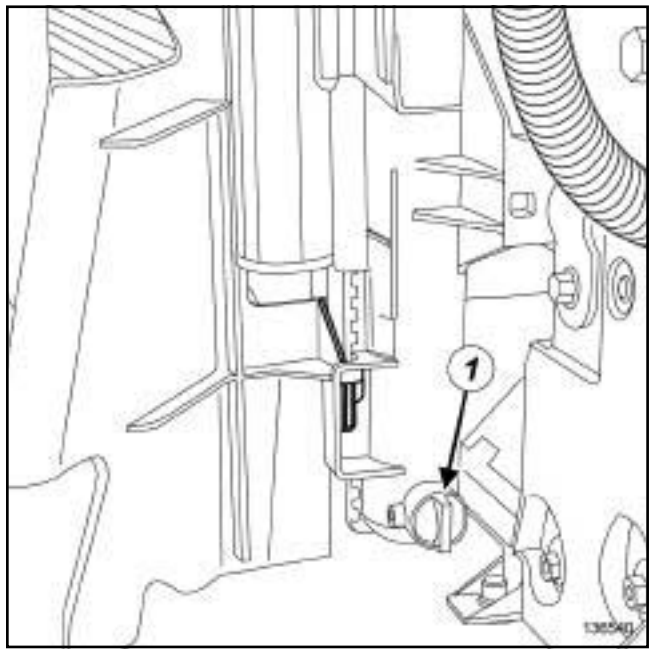

136540

❑ Open the drain plug (**1**) for the radiator cooling system.

❑ Use a **compressed air nozzle** to blow air into the system through the expansion bottle opening to remove as much coolant as possible.

CLEANING

❑ Fill the cooling system with water through the expansion bottle.

❑ Let the water run until the water collected by the cooling radiator bottom hose becomes clear.

❑ Use a **compressed air nozzle** to blow air into the circuit through the expansion bottle opening to remove as much water as possible.

❑ Close the drain plug of the radiator cooling system.

K9K

FILLING

❑

> Note:
>
> There are two procedures for filling the cooling system:
>
> - the procedure using the tool **(Mot. 1700)** recommended by Renault. It saves a considerable amount of time because it does not require the cooling system bleed screws to be opened,
> - the procedure without a special tool.

1 - Filling procedure with the tool (Mot. 1700)

❑ Fill the cooling system with engine coolant recommended by the manufacturer (see **Vehicle: Parts and ingredients for the repairwork**) (04B, Consumables - Products) using the tool **(Mot. 1700)**. Consult the user's manual for this tool (see **Cooling system filling and diagnostic tool: Use**) (Technical Note 3857A, 19A, Cooling).

2 - Filling procedure without a special tool

❑

> **WARNING**
>
> It is essential to open all of the bleed screws to remove as much as air as possible in the cooling system. Failure to perform this procedure may prevent the cooling system from filling properly and may damage the engine.

Method to access the bleed screws on the heater matrix hose and on the coolant outlet unit

K9K, and 830 or 832

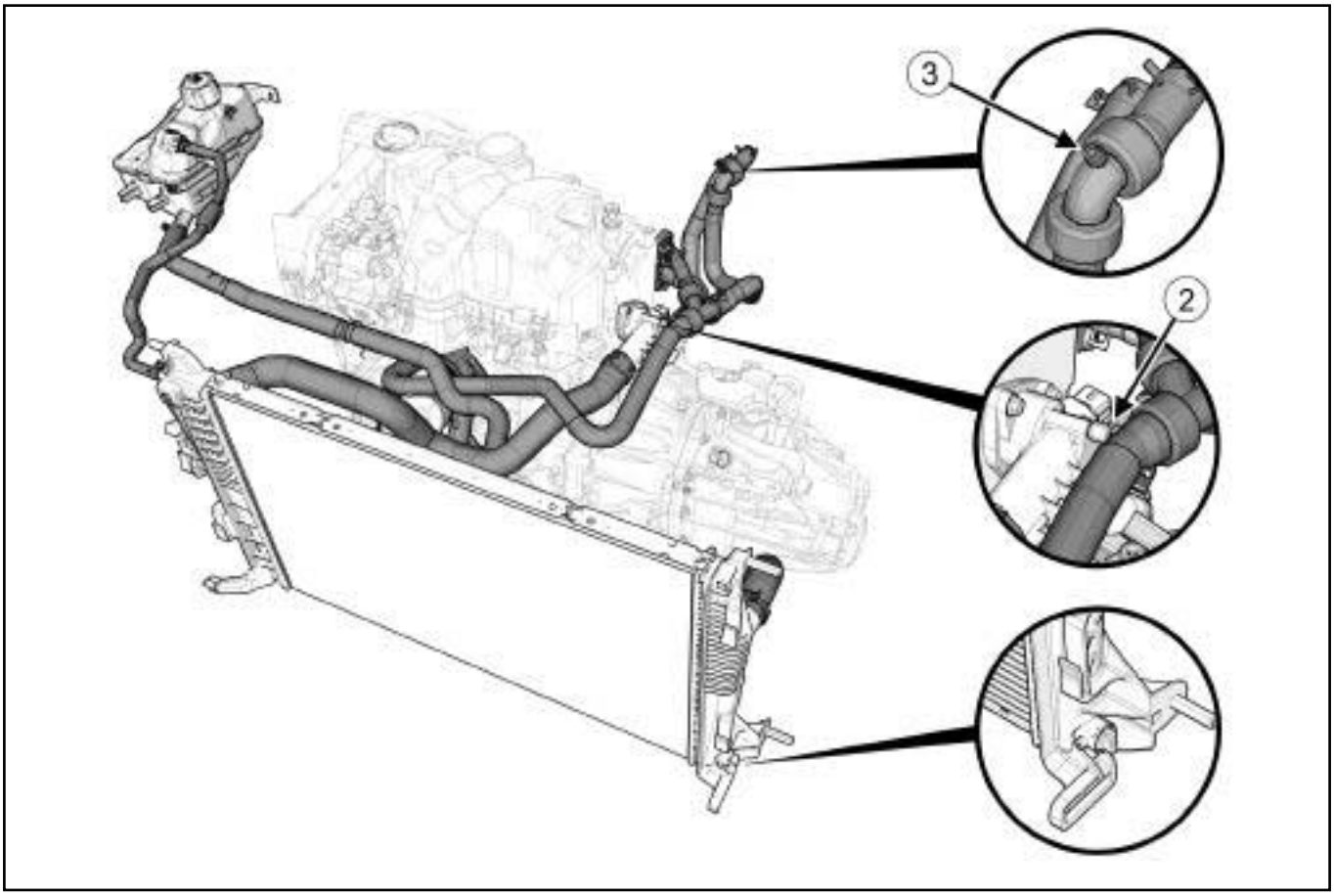

135560

❑ Remove:

- the bleed screw (**2**) of the coolant outlet unit,
- the bleed screw (**3**) of the heater matrix hose.

K9K

K9K, and 834

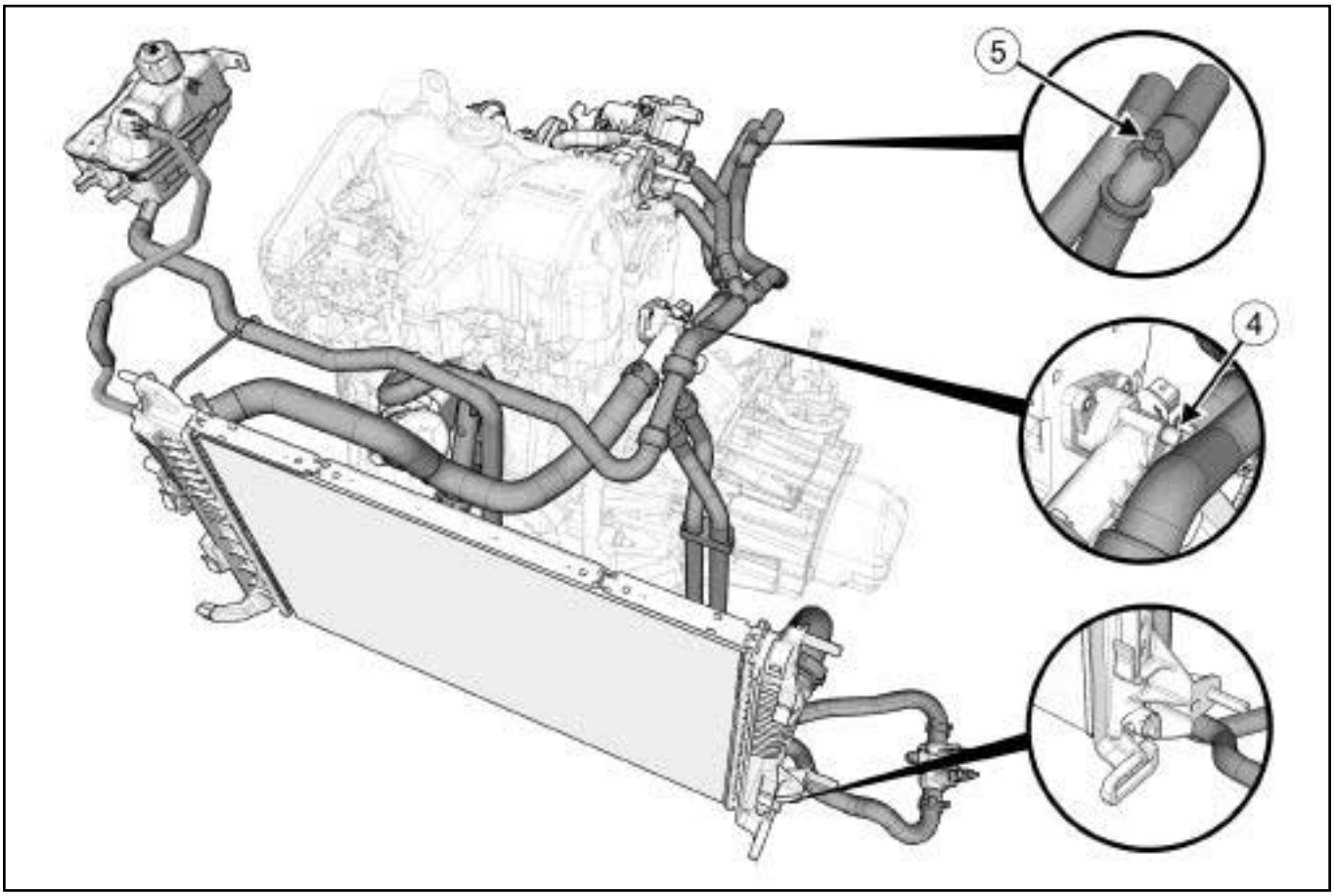

135566

❑ Remove:

- the bleed screw (**4**) of the coolant outlet unit,
- the bleed screw (**5**) of the heater matrix hose.

❑ Fill the cooling system with engine coolant recommended by the manufacturer (see **19A**, **Cooling**, **Engine cooling circuit: Specifications**, page **19A-1**) and (see **Vehicle: Parts and ingredients for the repairwork**) (04B, Consumables - Products) via the expansion bottle until it overflows.

❑ Close all the bleed screws as soon as the coolant starts to flow in a continuous stream.

❑ Pressurise the system using the **(Ms. 554-07)** to check that there are no leaks (see **19A**, **Cooling**, **Engine cooling circuit: check**, page **19A-2**) .

❑ Fill the expansion bottle until it overflows.

❑ Tighten the expansion bottle cap.

❑ Clean any surfaces soiled by the coolant.

BLEEDING

❑

WARNING
Do not open the bleed screw whilst the engine is running; this would damage the engine.

❑ Deactivate the air conditioning system so that the fan assembly is not operating from the start of the operation.

❑ Start the engine.

❑ Maintain the engine speed at **1500 rpm**, sharply varying the engine speed (up to the maximum) 2 to 3 times approximately every **2 minutes** until the fan assembly starts for the second time.

❑ Check that the heating is operating correctly.

❑ Allow the engine to cool until the coolant temperature is less than **50°C**.

❑ Make sure the coolant fluid level is at the « Maximum » mark.

❑ Refit the expansion bottle cap.

K9K

FINAL OPERATION

❏ Remove the **coolant draining tray**.

❏ Refit:

- the front bumper (see **Front bumper: Removal - Refitting**) (55A, Exterior protection),
- the front sections of the front wheel arch liners (see **Front wheel arch liner: Removal - Refitting**) (55A, Exterior protection),
- the front wheels (see **Wheel: Removal - Refitting**) (35A, Wheels and tyres),
- the engine undertray,
- the engine cover.

F4R

Essential special tooling	
Mot. 1700	Fault finding and filling-bleeding cooling system.
Ms. 554-07	Cooling system tester kit (complete). Contains plugs 554-01, 554-04, 554-06

Essential equipment
coolant draining tray
compressed air nozzle
pedal press

IMPORTANT

When working in the engine compartment, take care as the radiator fan(s) may start up unexpectedly (risk of being cut).

To avoid any risk of serious burns when the engine is hot:

- do not open the expansion bottle cap,
- do not drain the cooling system,
- do not open the bleed screw(s).

WARNING

Before the operation, protect the electrical accessories to prevent any risk of short circuiting and protect the belts to avoid damaging them.

DRAINING

❑ Position the vehicle on a two-post lift (see **Vehicle: Towing and lifting**) (02A, Lifting equipment).

❑ Remove:

- the engine cover,
- the expansion bottle cap,
- the front wheels (see **Wheel: Removal - Refitting**) (35A, Wheels and tyres),
- the front section of the front wheel arch liners (see **Front wheel arch liner: Removal - Refitting**) (55A, Exterior protection),
- the engine undertray bolts,
- the engine undertray,
- the front bumper (see **Front bumper: Removal - Refitting**) (55A, Exterior protection).

❑ Position the **coolant draining tray** under the vehicle.

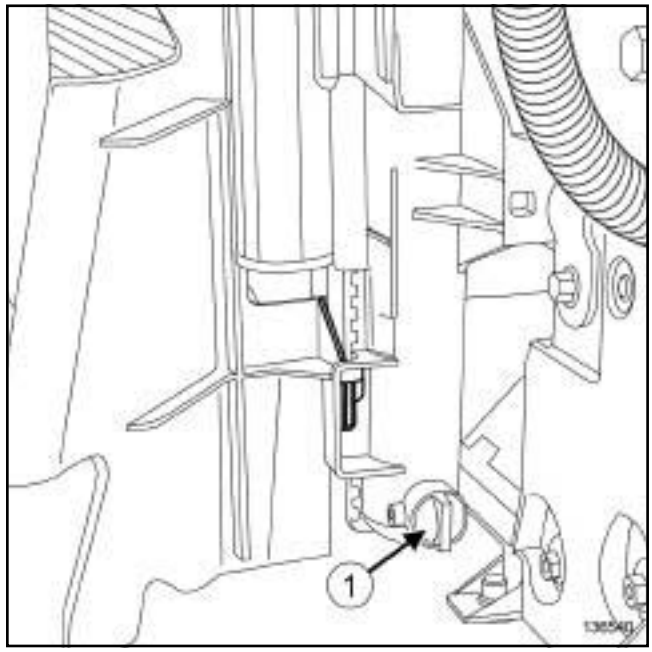

136540

❑ Open the drain plug (**1**) for the radiator cooling system.

❑ Use a **compressed air nozzle** to blow air into the system through the expansion bottle opening to remove as much coolant as possible.

CLEANING

❑ Fill the cooling system with water through the expansion bottle.

❑ Let the water run until the water collected by the cooling radiator bottom hose becomes clear.

❑ Use a **compressed air nozzle** to blow air into the circuit through the expansion bottle opening to remove as much water as possible.

❑ Close the drain plug of the radiator cooling system.

F4R

FILLING

❑

> Note:
>
> There are two procedures for filling the cooling system:
>
> - the procedure using the tool **(Mot. 1700)** recommended by Renault. It saves a considerable amount of time because it does not require the cooling system bleed screws to be opened,
> - the procedure without a special tool.

1 - Filling procedure with the tool (Mot. 1700)

❑ Fill the cooling system with engine coolant recommended by the manufacturer (see **Vehicle: Parts and ingredients for the repairwork**) (04B, Consumables - Products) using the tool **(Mot. 1700)**. Consult the user's manual for this tool (see **Cooling system filling and diagnostic tool: Use**) (Technical Note 3857A, 19A, Cooling).

2 - Filling procedure without a special tool

❑

> **WARNING**
>
> It is essential to open all of the bleed screws to remove as much as air as possible in the cooling system. Failure to perform this procedure may prevent the cooling system from filling properly and may damage the engine.

Method to access the bleed screws on the heater matrix hose and on the coolant outlet unit

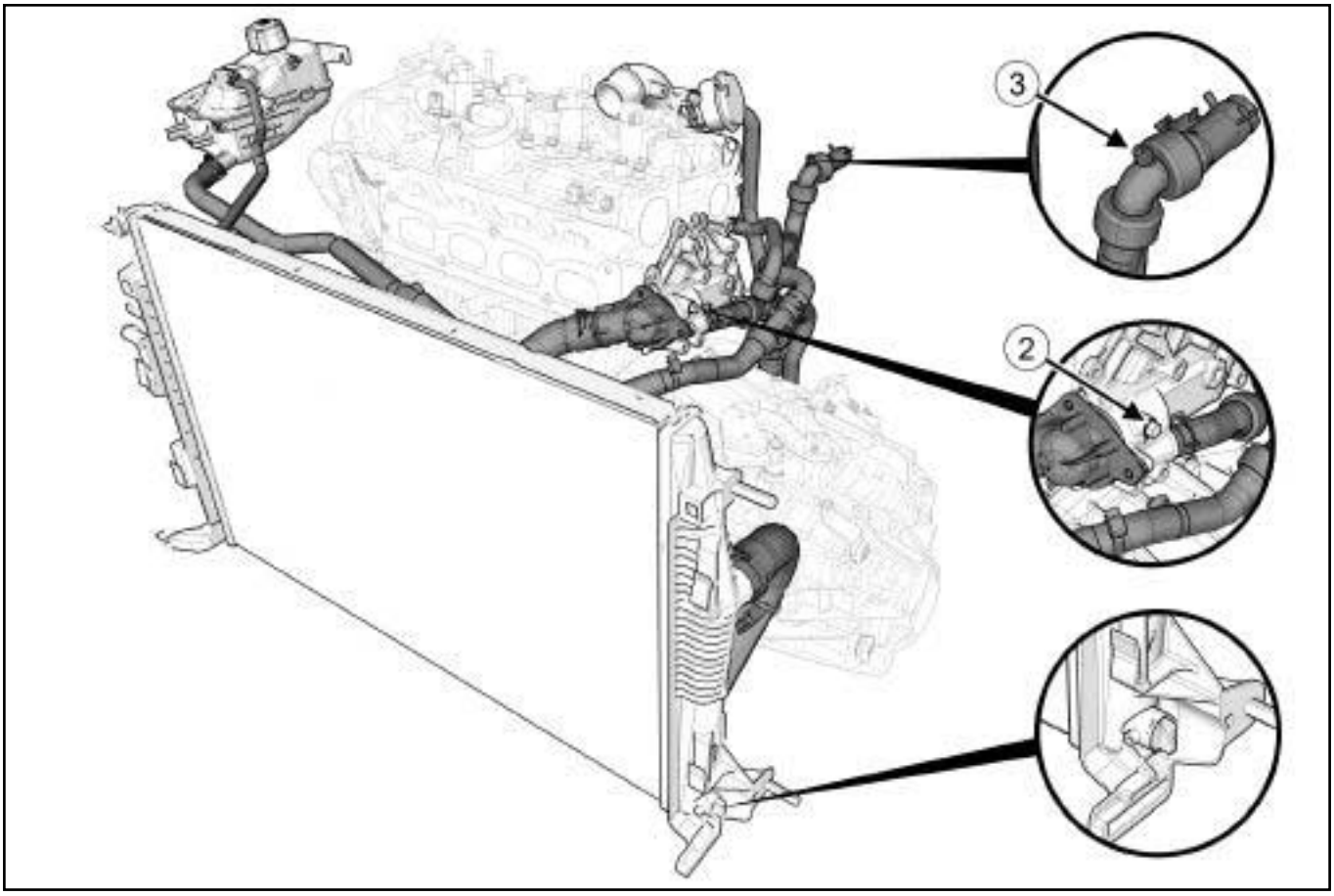

135613

❑ Remove:

- the bleed screw (**2**) of the coolant outlet unit,
- the bleed screw (**3**) of the heater matrix hose.

❑ Fill the cooling system with engine coolant recommended by the manufacturer (see **19A**, **Cooling**, **Engine cooling circuit: Specifications**, page **19A-**

1) and (see **Vehicle: Parts and ingredients for the repairwork**) (04B, Consumables - Products) via the expansion bottle until it overflows.

- ❑ Close all the bleed screws as soon as the coolant starts to flow in a continuous stream.
- ❑ Pressurise the system using the **(Ms. 554-07)** to check that there are no leaks (see **19A**, **Cooling**, **Engine cooling circuit: check**, page **19A-2**) .
- ❑ Fill the expansion bottle until it overflows.
- ❑ Tighten the expansion bottle cap.
- ❑ Clean any surfaces soiled by the coolant.

BLEEDING

- ❑ Deactivate the air conditioning system so that the fan assembly is not operating from the start of the operation.

> **WARNING**
> Do not open the bleed screw whilst the engine is running; this would damage the engine.

- ❑ Start the engine.
- ❑ Maintain the engine speed at **2500 rpm** using a **pedal press**, until the fan assembly starts for the second time.
- ❑ Check that the heating is operating correctly.
- ❑ Allow the engine to cool until the coolant temperature is less than **50˚C**.
- ❑ Make sure the coolant fluid level is at the « Maximum » mark.
- ❑ Refit the expansion bottle cap.

FINAL OPERATION

- ❑ Remove the **coolant draining tray**.
- ❑ Refit:
  - the front bumper (see **Front bumper: Removal - Refitting**) (55A, Exterior protection),
  - the front section of the front wheel arch liners (see **Front wheel arch liner: Removal - Refitting**) (55A, Exterior protection),
  - the front wheels (see **Wheel: Removal - Refitting**) (35A, Wheels and tyres),
  - the engine undertray,
  - the expansion bottle cap,
  - the engine cover.

F9Q

Essential special tooling	
Mot. 1700	Fault finding and filling-bleeding cooling system.
Ms. 554-07	Cooling system tester kit (complete). Contains plugs 554-01, 554-04, 554-06

Essential equipment
coolant draining tray
compressed air nozzle
pedal press

IMPORTANT

When working in the engine compartment, take care as the radiator fan(s) may start up unexpectedly (risk of being cut).

To avoid any risk of serious burns when the engine is hot:

- do not open the expansion bottle cap,
- do not drain the cooling system,
- do not open the bleed screw(s).

WARNING

Before the operation, protect the electrical accessories to prevent any risk of short circuiting and protect the belts to avoid damaging them.

DRAINING

❑ Position the vehicle on a two-post lift (see **Vehicle: Towing and lifting**) (02A, Lifting equipment).

❑ Remove:

- the engine cover,
- the expansion bottle cap,
- the front wheels (see **Wheel: Removal - Refitting**) (35A, Wheels and tyres),
- the front sections of the front wheel arch liners (see **Front wheel arch liner: Removal - Refitting**) (55A, Exterior protection),
- the engine undertray bolts,
- the engine undertray.
- the front bumper (see **Front bumper: Removal - Refitting**) (55A, Exterior protection),

❑ Position the **coolant draining tray** under the vehicle.

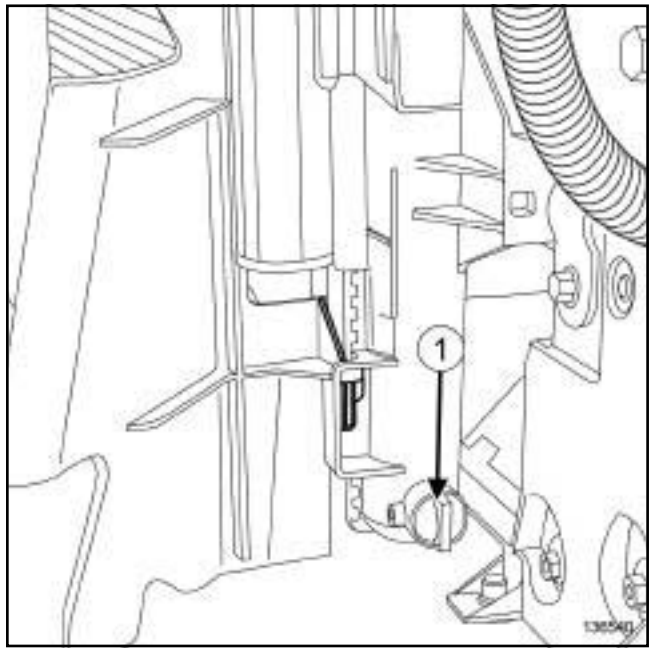

136540

❑ Open the drain plug (**1**) for the radiator cooling system.

❑ Use a **compressed air nozzle** to blow air into the system through the expansion bottle opening to remove as much coolant as possible.

CLEANING

❑ Fill the cooling system with water through the expansion bottle.

❑ Let the water run until the water collected by the cooling radiator bottom hose becomes clear.

❑ Use a **compressed air nozzle** to blow air into the circuit through the expansion bottle opening to remove as much water as possible.

❑ Close the drain plug of the radiator cooling system.

F9Q

FILLING

❑

> Note:
>
> There are two procedures for filling the cooling system:
>
> - the procedure using the tool **(Mot. 1700)** recommended by Renault. It saves a considerable amount of time because it does not require the cooling system bleed screws to be opened,
> - the procedure without a special tool.

1 - Filling procedure with the tool (Mot. 1700)

❑ Fill the cooling system with engine coolant recommended by the manufacturer (see **Vehicle: Parts and ingredients for the repairwork**) (04B, Consumables - Products) using the tool **(Mot. 1700)**. Consult the user's manual for this tool (see **Cooling system filling and diagnostic tool: Use**) (Technical Note 3857A, 19A, Cooling).

2 - Filling procedure without a special tool

❑

> **WARNING**
>
> It is essential to open all of the bleed screws to remove as much as air as possible in the cooling system. Failure to perform this procedure may prevent the cooling system from filling properly and may damage the engine.

Method to access the bleed screws on the heater matrix hose and on the coolant outlet unit

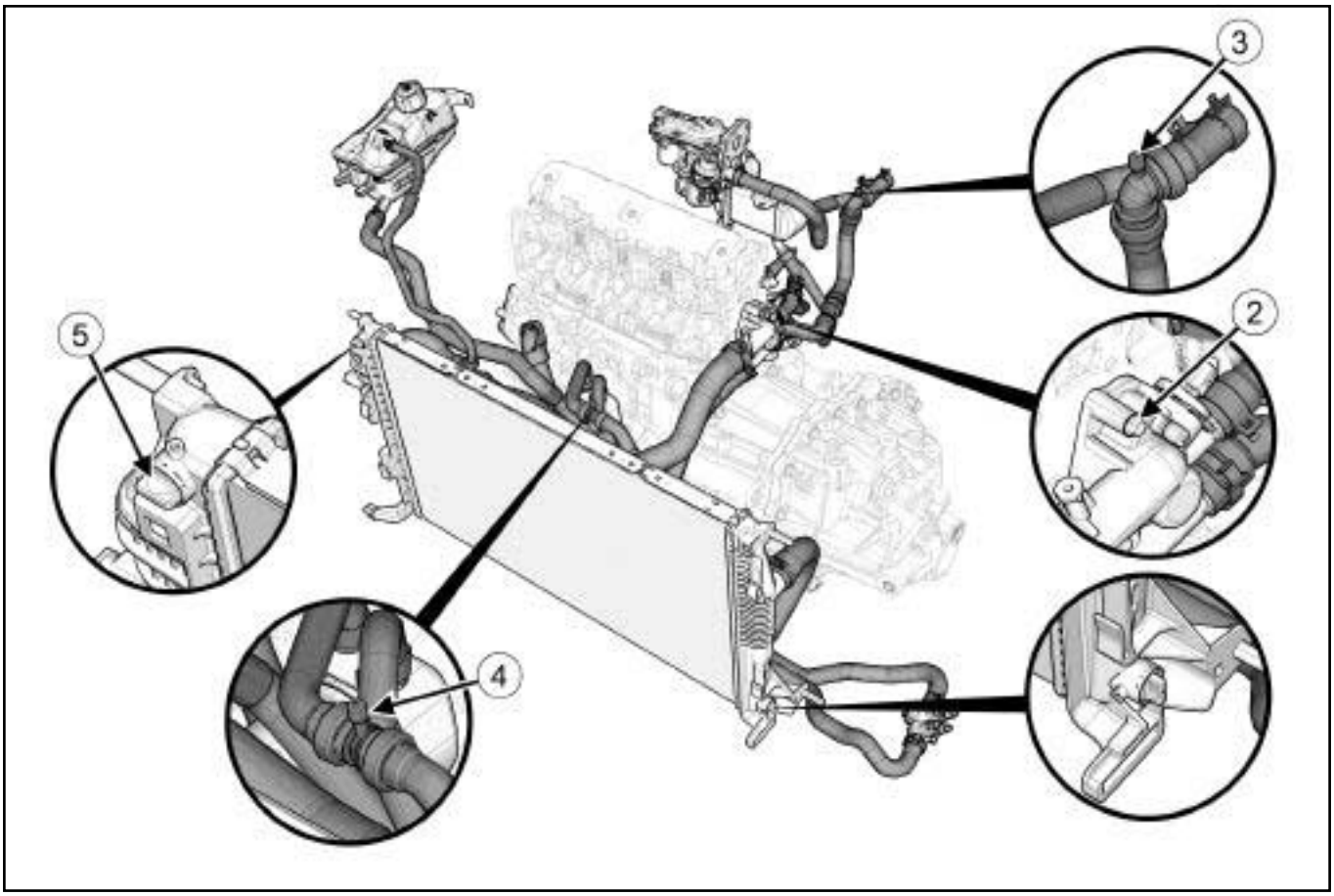

135426

❑ Remove:

- the battery (see **Battery: Removal - Refitting**) (80A, Battery),
- the battery tray (see **Battery tray: Removal - Refitting**) (80A, Battery),
- the bleed screw (**2**) of the coolant outlet unit,

F9Q

- the bleed screw (**3**) of the heater matrix hose,
- the bleed screw (**4**) of the cooling radiator bottom hose,
- the bleed screw (**5**) of the cooling radiator.

❑ Fill the cooling system with engine coolant recommended by the manufacturer (see **19A**, **Cooling**, **Engine cooling circuit: Specifications**, page **19A-1**) and (see **Vehicle: Parts and ingredients for the repairwork**) (04B, Consumables - Products) via the expansion bottle until it overflows.

❑ Close all the bleed screws as soon as the coolant starts to flow in a continuous stream.

❑ Refit:

- the battery tray (see **Battery tray: Removal - Refitting**) (80A, Battery),
- the battery (see **Battery: Removal - Refitting**) (80A, Battery),

❑ Pressurise the system using the **(Ms. 554-07)** to check that there are no leaks (see **19A**, **Cooling**, **Engine cooling circuit: check**, page **19A-2**) .

❑ Fill the expansion bottle until it overflows.

❑ Tighten the expansion bottle cap.

❑ Clean any surfaces soiled by the coolant.

BLEEDING

❑

WARNING
Do not open the bleed screw whilst the engine is running; this would damage the engine.

F9Q, and 870

❑

WARNING
Before bleeding the cooling system, it is essential to deactivate the thermoplungers to avoid irreparably damaging them.

❑ Disconnect:

- the battery (see **Battery: Removal - Refitting**) (80A, Battery),
- the heating element unit connector.

❑ Connect the battery (see **Battery: Removal - Refitting**) (80A, Battery).

❑ Deactivate the air conditioning system so that the fan assembly is not operating from the start of the operation.

❑ Start the engine.

❑ Maintain the engine speed at **2500 rpm** using a **pedal press**, until the fan assembly starts for the second time.

❑ Check that the heating is operating correctly.

❑ Allow the engine to cool until the coolant temperature is less than **50°C**.

❑ Make sure the coolant fluid level is at the « Maximum » mark.

❑ Refit the expansion bottle cap.

F9Q, and 870

❑ Disconnect the battery (see **Battery: Removal - Refitting**) (80A, Battery).

❑ Connect:

- the heating element unit connector,
- the battery (see **Battery: Removal - Refitting**) (80A, Battery).

FINAL OPERATION

❑ Remove the **coolant draining tray**.

F9Q

❑ Refit:

- the front bumper (see **Front bumper: Removal - Refitting**) (55A, Exterior protection),
- the front sections of the front wheel arch liners (see **Front wheel arch liner: Removal - Refitting**) (55A, Exterior protection),
- the front wheels (see **Wheel: Removal - Refitting**) (35A, Wheels and tyres),
- the engine undertray,
- the engine cover.

K4M

Essential special tooling	
Mot. 1448	Long nose pliers for hose clips.

Essential equipment
safety strap(s)

IMPORTANT

When working in the engine compartment, take care as the radiator fan(s) may start up unexpectedly (risk of being cut).

To avoid any risk of serious burns when the engine is hot:

- do not open the expansion bottle cap,
- do not drain the cooling system,
- do not open the bleed screw(s).

WARNING

Prepare for the flow of fluid, and protect the surrounding components.

WARNING

When carrying out a repair that requires a complete change, it is essential to flush the circuit with clean water, blast compressed air through the circuit to drive out the water, fill and bleed the circuit and then measure the effective protection.

The criteria to be met are:

- protection down to **-25°C ± 2** for cold and temperate countries,
- protection down to **-40°C ± 2** for "extreme cold" countries.

REMOVAL

I - REMOVAL PREPARATION OPERATION

❑ Position the vehicle on a two-post lift (see **Vehicle: Towing and lifting**) (02A, Lifting equipment).

❑ Disconnect the battery (see **Battery: Removal - Refitting**) (80A, Battery).

❑ Remove:

- the engine cover,
- the front wheels (see **Wheel: Removal - Refitting**) (35A, Wheels and tyres),
- the front section of the front wheel arch liners (see **Front wheel arch liner: Removal - Refitting**) (55A, Exterior protection),
- the engine undertray bolts,
- the engine undertray,
- the front bumper (see **Front bumper: Removal - Refitting**) (55A, Exterior protection).

❑ Drain the cooling system (see **19A**, **Cooling**, **Cooling circuit: Draining - Refilling**, page **19A-17**) .

K4M

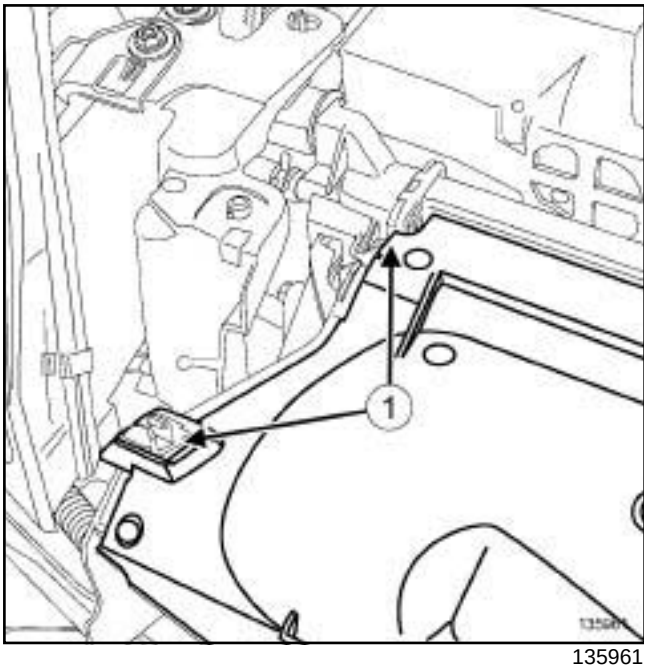

135961

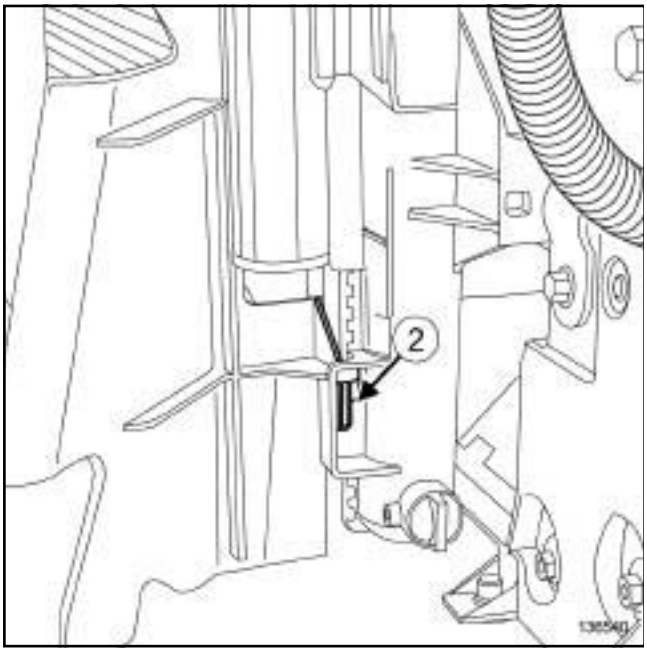

136540

❑ Unclip the air deflectors at (**1**) and (**2**) .

❑ Remove:

- the air deflectors,
- the headlights (see **Front headlight: Removal - Refitting**) (80B, Headlights),
- the front bumper supports (see **Front bumper support: Removal - Refitting**) (42A, Front upper structure),
- the audible warning (see **Horn: Removal - Refitting**) (82B, Horn).

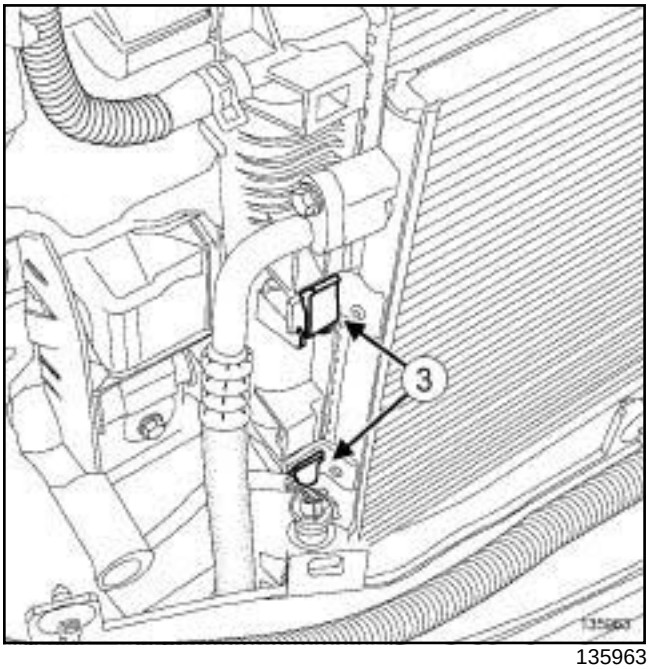

135963

❑ Unclip the condenser from each side at (**3**) .

❑ Attach the condenser to the front impact cross member using a **safety strap(s)**.

K4M

II - OPERATION FOR REMOVAL OF PART CONCERNED

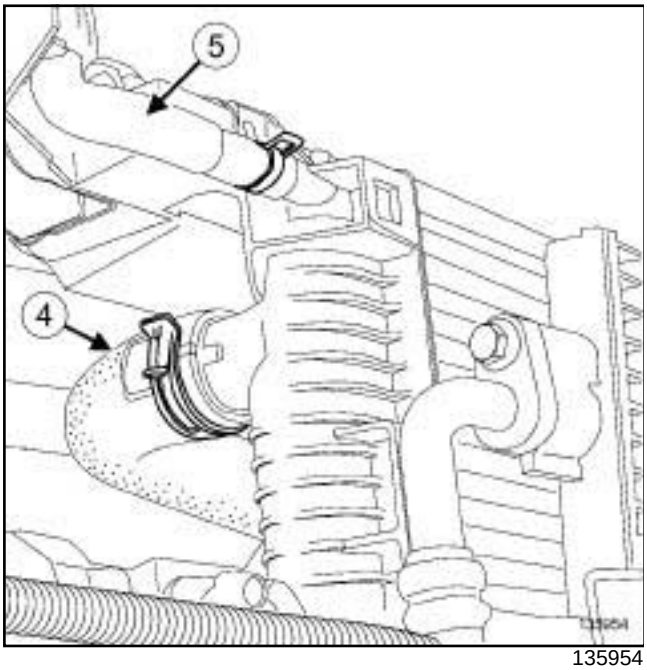

135954

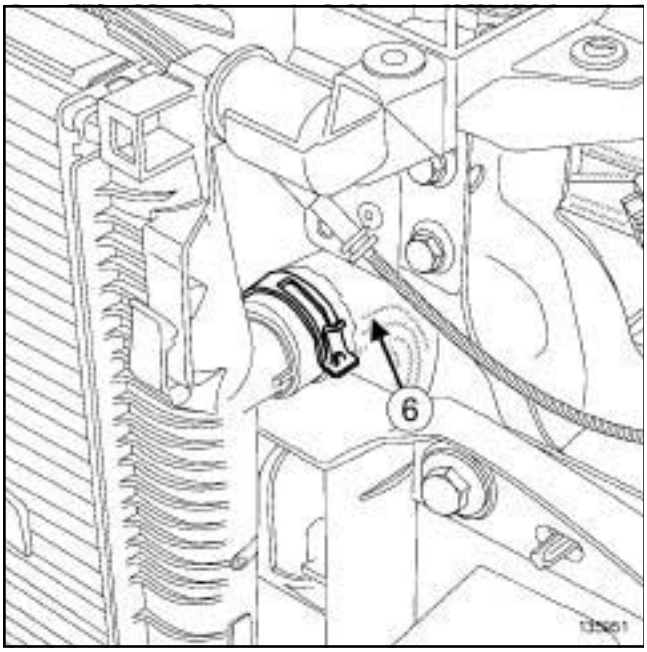

135951

❑ Remove using the **(Mot. 1448)** :

- the clip for the cooling radiator top cooling hose,
- the expansion bottle degassing hose clip from the cooling radiator,
- the clip for the cooling radiator bottom cooling hose.

❑ Disconnect:

- the top cooling hose (**4**) from the cooling radiator,
- the expansion bottle degassing hose (**5**) from the cooling radiator,
- the bottom cooling hose (**6**) from the cooling radiator.

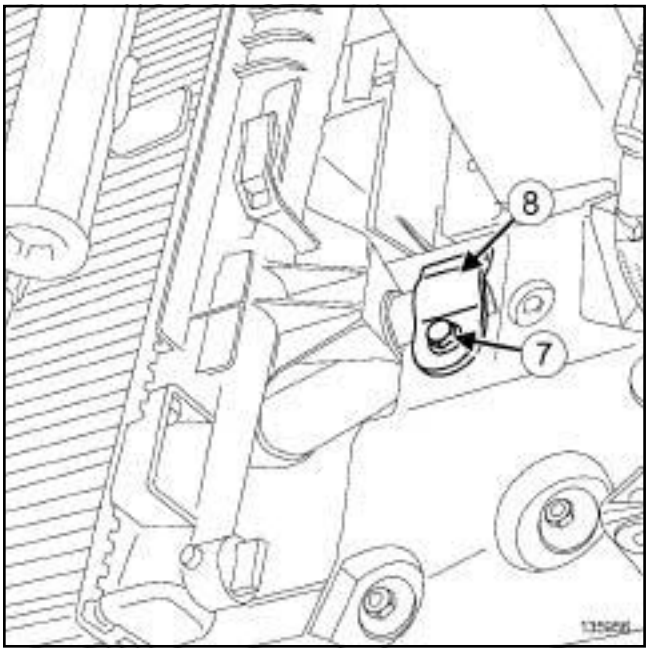

135956

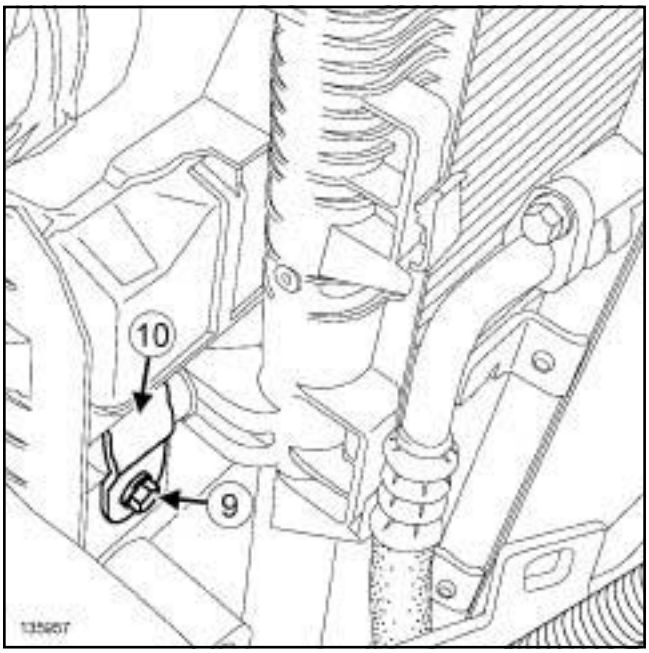

135957

❑ Remove:

- the bolt (**7**) from the cooling radiator retaining bracket,
- the cooling radiator retaining bracket (**8**) ,
- the bolt (**9**) from the cooling radiator retaining bracket,
- the cooling radiator retaining bracket (**10**) .

K4M

❏ Remove the cooling radiator from the front end panel.

REFITTING

I - REFITTING OPERATION FOR PART CONCERNED

❏ Refit:

- the cooling radiator to the front end panel,
- the retaining brackets to the cooling radiator,
- the retaining bracket bolts to the cooling radiator.

❏ Connect:

- the bottom cooling hose to the cooling radiator,
- the expansion bottle degassing hose to the cooling radiator,
- the top cooling hose to the cooling radiator.

❏ Using the **(Mot. 1448)**, fit:

- the bottom cooling hose clip on the cooling radiator,
- the expansion bottle degassing hose clip on the cooling radiator,
- the top cooling hose clip on the cooling radiator.

II - FINAL OPERATION

❏ Clip the condenser onto the cooling radiator.

❏ Refit:

- the audible warning (see **Horn: Removal - Refitting**) (82B, Horn),
- the front bumper supports (see **Front bumper support: Removal - Refitting**) (42A, Front upper structure),
- the headlights (see **Front headlight: Removal - Refitting**) (80B, Headlights),
- the air deflectors,
- the front bumper (see **Front bumper: Removal - Refitting**) (55A, Exterior protection),
- the front section of the front wheel arch liners (see **Front wheel arch liner: Removal - Refitting**) (55A, Exterior protection),
- the front wheels (see **Wheel: Removal - Refitting**) (35A, Wheels and tyres),
- the engine cover.

❏ Connect the battery (see **Battery: Removal - Refitting**) (80A, Battery).

❏ Fill and bleed the cooling system (see **19A**, **Cooling**, **Cooling circuit: Draining - Refilling**, page **19A-17**) .

❏ Refit the engine undertray.

Cooling radiator: Removal - Refitting

K9K

Essential special tooling	
Mot. 1448	Long nose pliers for hose clips.
Mot. 1202-02	Pliers for small hose clips.

Essential equipment
safety strap(s)

IMPORTANT

When working in the engine compartment, take care as the radiator fan(s) may start up unexpectedly (risk of being cut).

To avoid any risk of serious burns when the engine is hot:

- do not open the expansion bottle cap,
- do not drain the cooling system,
- do not open the bleed screw(s).

WARNING

Prepare for the flow of fluid, and protect the surrounding components.

REMOVAL

I - REMOVAL PREPARATION OPERATION

❑ Position the vehicle on a two-post lift (see **Vehicle: Towing and lifting**) (02A, Lifting equipment).

❑ Remove:

- the engine cover,
- the front wheels (see **Wheel: Removal - Refitting**) (35A, Wheels and tyres),
- the engine undertray bolts,
- the engine undertray,
- the front section of the front wheel arch liners (see **Front wheel arch liner: Removal - Refitting**) (55A, Exterior protection),
- the front bumper (see **Front bumper: Removal - Refitting**) (55A, Exterior protection).

❑ Drain the cooling system (see **19A**, **Cooling**, **Cooling circuit: Draining - Refilling**, page **19A-17**) .

❑ Remove:

- the cooling radiator top air deflector,
- the side air deflectors of the cooling radiator,
- the headlights (see **Front headlight: Removal - Refitting**) (80B, Headlights),
- the front bumper supports (see **Front bumper support: Removal - Refitting**) (42A, Front upper structure),
- the turbocharger air outlet pipe (see **12B**, **Turbocharging**, **Intercooler air inlet pipe: Removal - Refitting**, page **12B-41**) ,
- the intercooler air inlet pipe (see **12B**, **Turbocharging**, **Intercooler air inlet pipe: Removal - Refitting**, page **12B-41**) ,
- the intercooler air outlet pipe (see **12B**, **Turbocharging**, **Intercooler air outlet pipe: Removal - Refitting**, page **12B-56**) ,
- the intercooler (see **12B**, **Turbocharging**, **Intercooler: Removal - Refitting**, page **12B-37**) ,
- the audible warning (see **Horn: Removal - Refitting**) (82B, Horn).

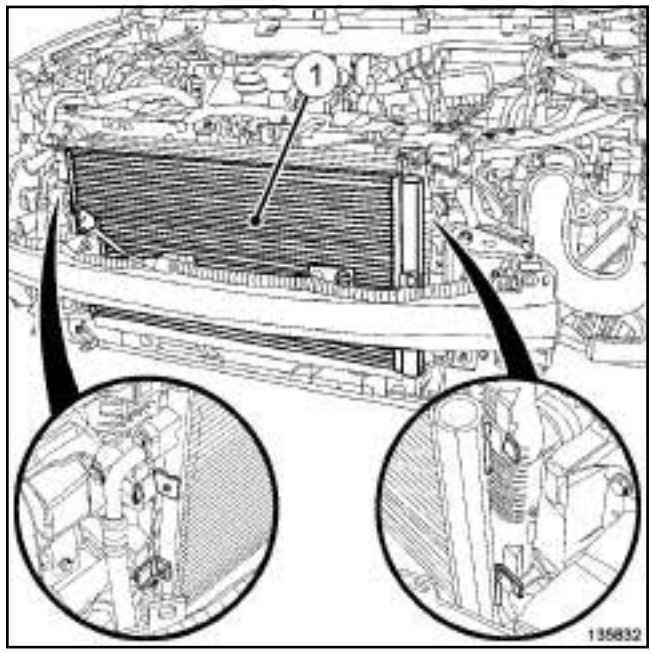

135832

❑ Unclip the air conditioning condenser (**1**) from the cooling radiator by pulling upwards.

❑ Slightly separate the air conditioning condenser.

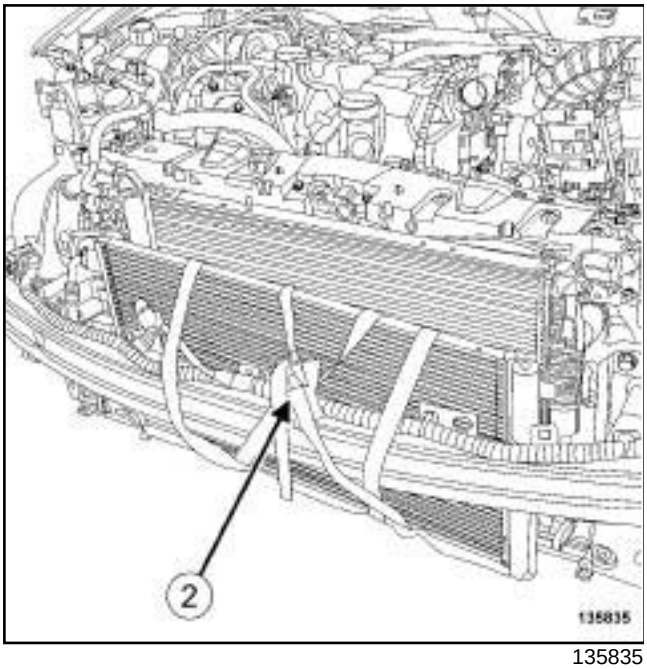

135835

❑ Using a **safety strap(s)** (**2**) , attach the air conditioning condenser to the front impact cross member.

II - OPERATION FOR REMOVAL OF PART CONCERNED

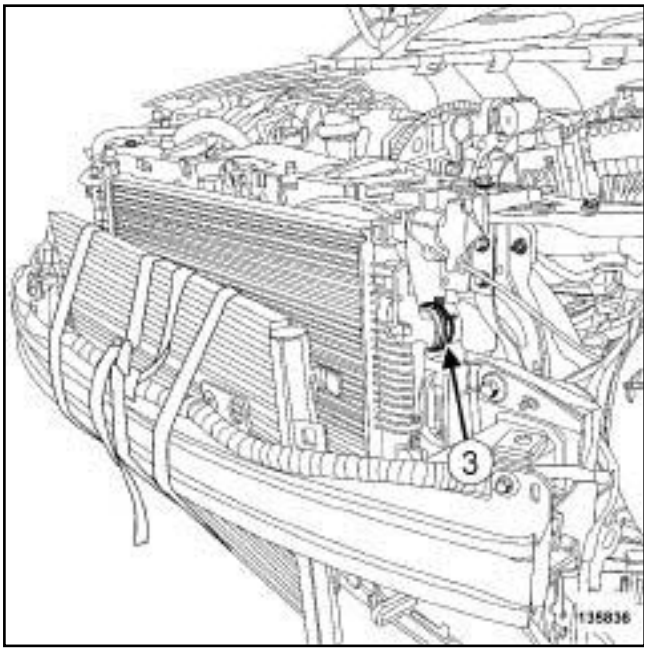

135836

❑ Use the tool **(Mot. 1448)** to separate the cooling radiator bottom cooling hose clip (**3**) from the cooling radiator.

❑ Disconnect the cooling radiator bottom cooling hose from the cooling radiator.

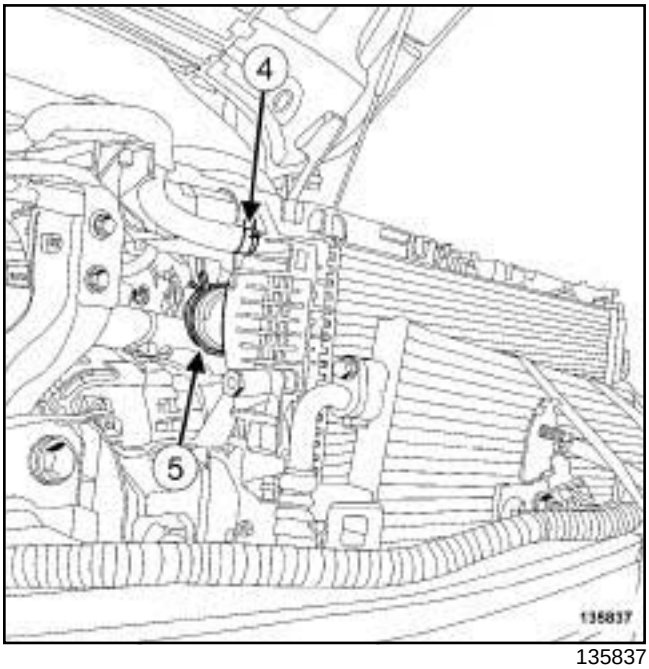

135837

❑ Use the tool **(Mot. 1202-02)** to separate the expansion bottle top cooling hose clip (**4**) from the cooling radiator.

❑ Disconnect the expansion bottle top cooling hose from the cooling radiator.

❑ Use the tool **(Mot. 1448)** to separate the cooling radiator top cooling hose clip (**5**) from the cooling radiator.

❑ Disconnect the cooling radiator top cooling hose from the cooling radiator.

K9K

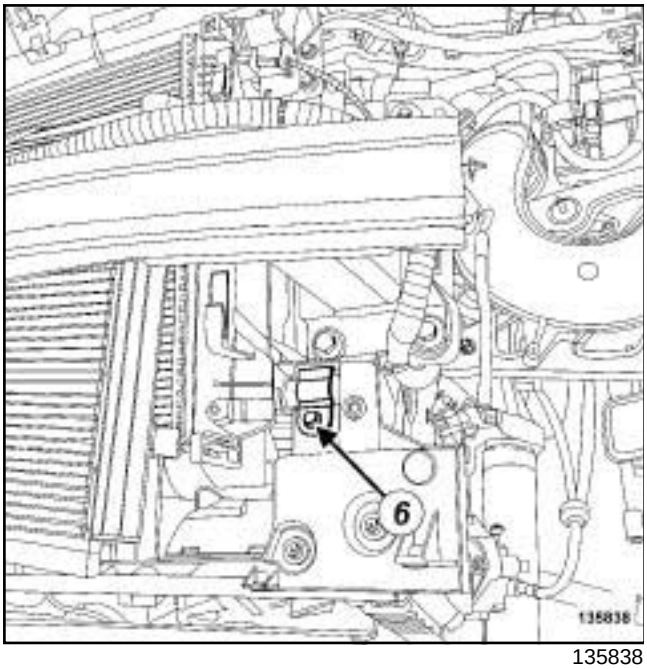

135838

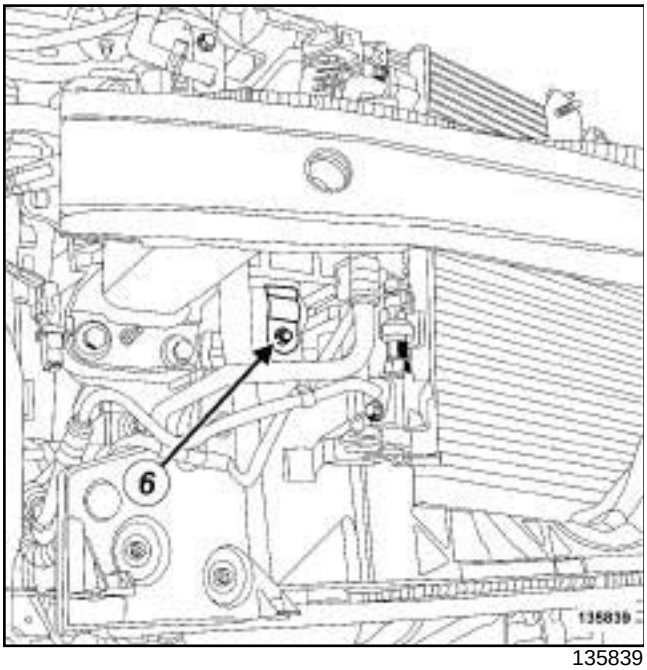

135839

❑ Remove:

- the retaining bracket bolts (**6**) on the cooling radiator,
- the retaining brackets on the cooling radiator.

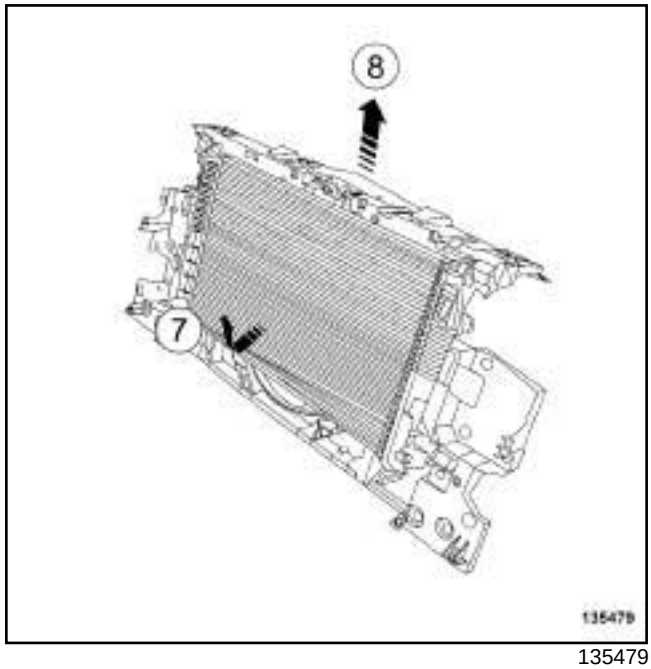

135479

❑ Remove the cooling radiator from the front end panel by:

- slightly pulling the cooling radiator towards the front of the vehicle (**7**) ,
- pulling the cooling radiator upwards (**8**) .

REFITTING

I - REFITTING OPERATION FOR PART CONCERNED

❑ Refit the cooling radiator to the front end panel.

❑ Connect the cooling radiator top cooling hose to the cooling radiator.

❑ Fit the clip for the cooling radiator top cooling hose on the cooling radiator using the tool **(Mot. 1448)**.

❑ Connect the expansion bottle top cooling hose to the cooling radiator.

❑ Fit the clip for the expansion bottle top cooling hose on the cooling radiator using the tool **(Mot. 1202-02)**.

❑ Connect the cooling radiator bottom cooling hose to the cooling radiator.

❑ Fit the clip for the cooling radiator bottom cooling hose on the cooling radiator using the tool **(Mot. 1448)**.

II - FINAL OPERATION

❑ Detach the air conditioning condenser from the front impact cross member.

K9K

- ❑ Fit the air conditioning condenser.
- ❑ Clip the air conditioning condenser onto the cooling radiator.
- ❑ Refit:
  - the audible warning (see **Horn: Removal - Refitting**) (82B, Horn),
  - the intercooler (see **12B**, **Turbocharging**, **Intercooler: Removal - Refitting**, page **12B-37**) ,
  - the intercooler air outlet pipe (see **12B**, **Turbocharging**, **Intercooler air outlet pipe: Removal - Refitting**, page **12B-56**) ,
  - the intercooler air inlet pipe (see **12B**, **Turbocharging**, **Intercooler air inlet pipe: Removal - Refitting**, page **12B-41**) ,
  - the turbocharger air outlet pipe (see **12B**, **Turbocharging**, **Intercooler air inlet pipe: Removal - Refitting**, page **12B-41**) ,
  - the front bumper supports (see **Front bumper support: Removal - Refitting**) (42A, Front upper structure),
  - the headlights (see **Front headlight: Removal - Refitting**) (80B, Headlights),
  - the side air deflectors of the cooling radiator,
  - the cooling radiator top air deflector,
  - the front bumper (see **Front bumper: Removal - Refitting**) (55A, Exterior protection),
  - the front section of the front wheel arch liners (see **Front wheel arch liner: Removal - Refitting**) (55A, Exterior protection),
  - the engine undertray,
  - the front wheels (see **Wheel: Removal - Refitting**) (35A, Wheels and tyres),
  - the engine cover.
- ❑ Fill and bleed the cooling system (see **19A**, **Cooling**, **Cooling circuit: Draining - Refilling**, page **19A-17**) .

F9Q

Essential special tooling	
Mot. 1448	Long nose pliers for hose clips.

Essential equipment
safety strap(s)

WARNING
Before the operation, protect the electrical accessories to prevent any risk of short circuiting and protect the belts to avoid damaging them.

IMPORTANT
When working in the engine compartment, take care as the radiator fan(s) may start up unexpectedly (risk of being cut).

To avoid any risk of serious burns when the engine is hot:

- do not open the expansion bottle cap,
- do not drain the cooling system,
- do not open the bleed screw(s).

WARNING
When carrying out a repair that requires a complete change, it is essential to flush the circuit with clean water, blast compressed air through the circuit to drive out the water, fill and bleed the circuit and then measure the effective protection.

The criteria to be met are:

- protection down to **-25°C ± 2** for cold and temperate countries,
- protection down to **-40°C ± 2** for "extreme cold" countries.

REMOVAL

I - REMOVAL PREPARATION OPERATION

❑ Position the vehicle on a two-post lift (see **Vehicle: Towing and lifting**) (02A, Lifting equipment).

❑ Disconnect the battery (see **Battery: Removal - Refitting**) (80A, Battery).

❑ Remove:

- the engine cover,
- the engine undertray bolts,
- the engine undertray,
- the front wheels (see **Wheel: Removal - Refitting**) (35A, Wheels and tyres),
- the front section of the front wheel arch liners (see **Front wheel arch liner: Removal - Refitting**) (55A, Exterior protection),
- the front bumper (see **Front bumper: Removal - Refitting**) (55A, Exterior protection).

❑ Drain the cooling system (see **19A**, **Cooling**, **Cooling circuit: Draining - Refilling**, page **19A-17**) .

❑ Remove:

- the cooling radiator air deflectors,
- the headlights (see **Front headlight: Removal - Refitting**) (80B, Headlights),
- the front bumper supports (see **Front bumper support: Removal - Refitting**) (42A, Front upper structure),
- the audible warning (see **Horn: Removal - Refitting**) (82B, Horn),
- the intercooler (see **12B**, **Turbocharging**, **Intercooler: Removal - Refitting**, page **12B-37**) .

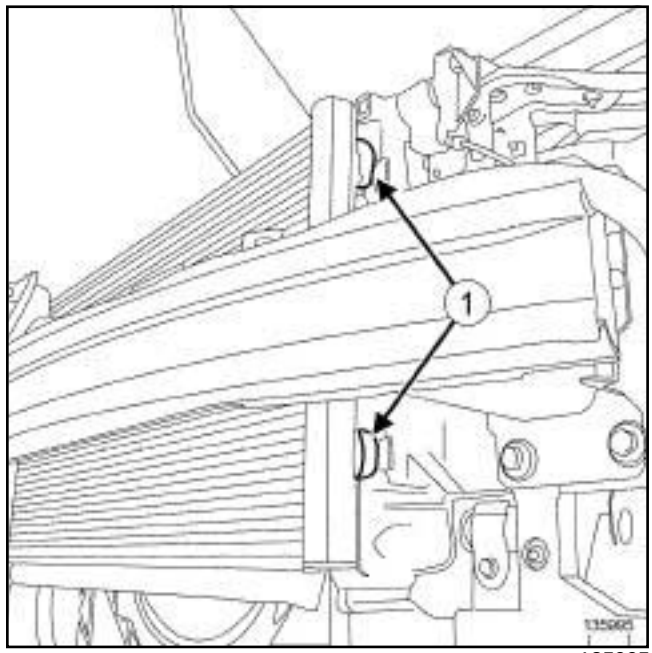

135995

❑ Unclip the condenser (**1**) from the cooling radiator.

F9Q

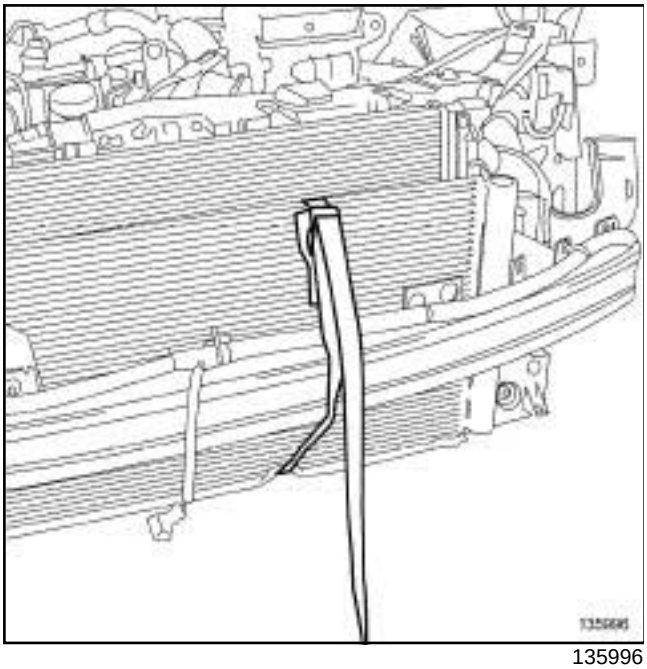

135996

❑ Attach the condenser to the front impact cross member using a **safety strap(s)**.

II - OPERATION FOR REMOVAL OF PART CONCERNED

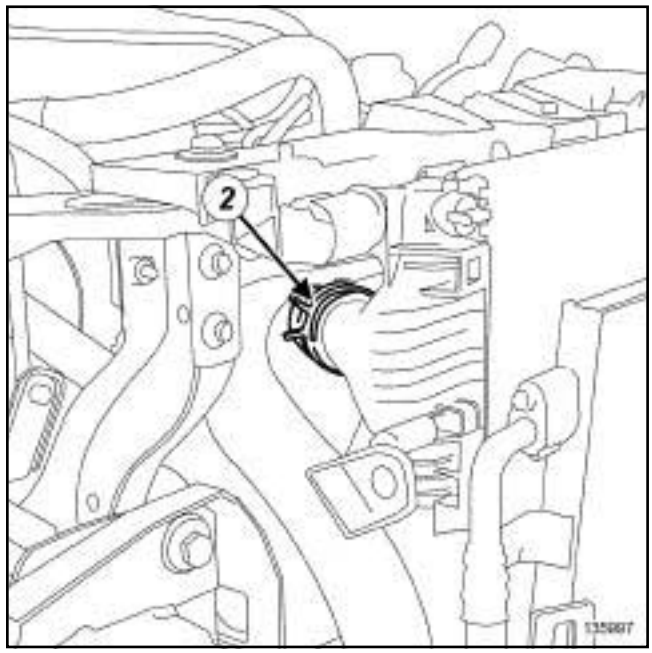

135997

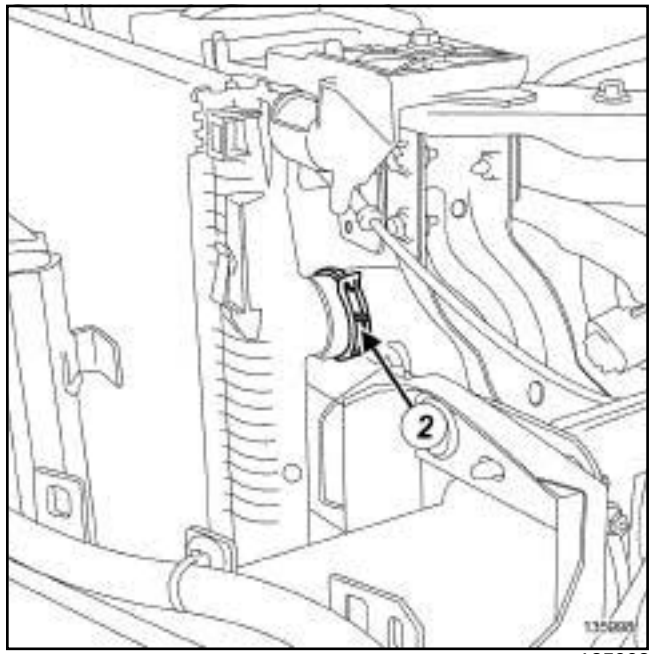

135998

❑ Remove the clips (**2**) from the cooling radiator hoses using the tool **(Mot. 1448)**.

❑ Disconnect the cooling radiator hoses.

F9Q

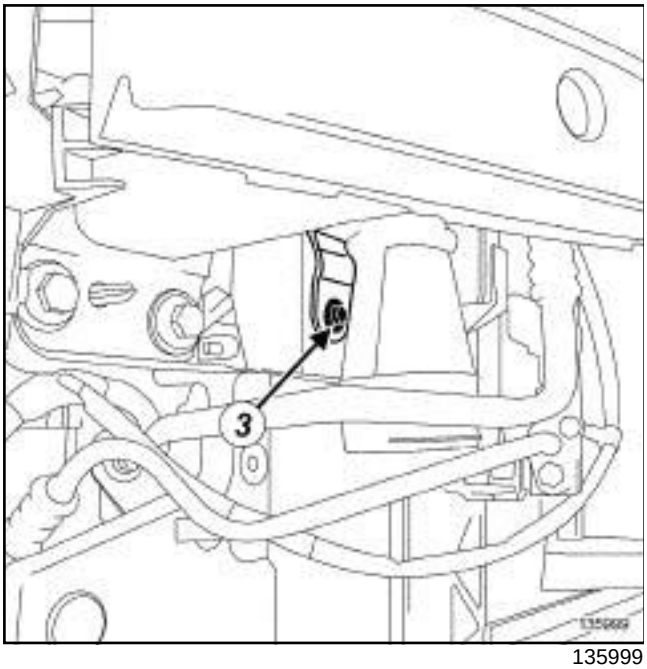

135999

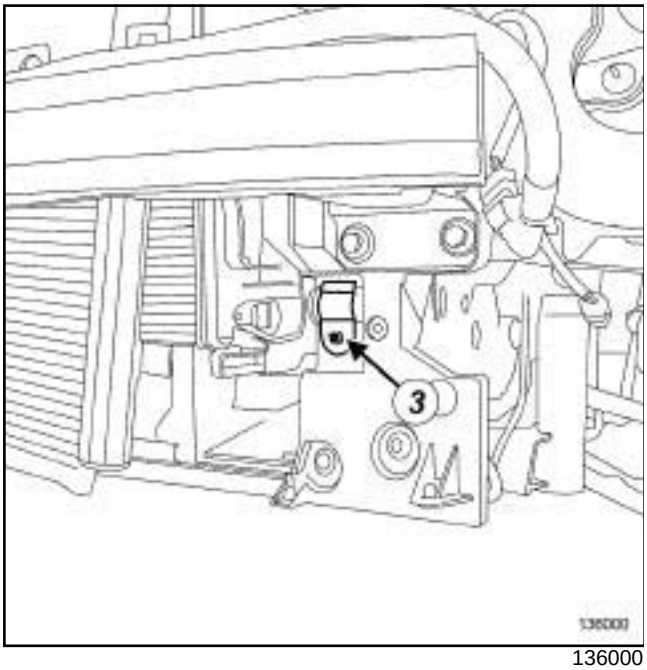

136000

❑ Remove:

- the retaining bracket bolts (**3**) on the cooling radiator,
- the retaining brackets on the cooling radiator,
- the cooling radiator.

REFITTING

I - REFITTING OPERATION FOR PART CONCERNED

❑ Refit the cooling radiator.

❑ Connect the cooling radiator hoses.

❑ Fit the cooling radiator hose clips using the tool **(Mot. 1448)**.

II - FINAL OPERATION

❑ Detach the condenser from the front impact cross member.

❑ Clip the condenser onto the cooling radiator.

❑ Refit:

- the intercooler (see **12B**, **Turbocharging**, **Intercooler: Removal - Refitting**, page **12B-37**) ,
- the audible warning (see **Horn: Removal - Refitting**) (82B, Horn),
- the front bumper supports (see **Front bumper support: Removal - Refitting**) (42A, Front upper structure),
- the headlights (see **Front headlight: Removal - Refitting**) (80B, Headlights),
- the cooling radiator side air deflectors,
- the cooling radiator top air deflector.
- the front bumper (see **Front bumper: Removal - Refitting**) (55A, Exterior protection),
- the front section of the front wheel arch liners (see **Front wheel arch liner: Removal - Refitting**) (55A, Exterior protection),
- the front wheels (see **Wheel: Removal - Refitting**) (35A, Wheels and tyres),
- the engine undertray,
- the engine cover.

❑ Fill and bleed the cooling system (see **19A**, **Cooling**, **Cooling circuit: Draining - Refilling**, page **19A-17**) .

F4R

Essential special tooling	
Mot. 1448	Long nose pliers for hose clips.

Essential equipment
safety strap(s)

WARNING
Before the operation, protect the electrical accessories to prevent any risk of short circuiting and protect the belts to avoid damaging them.

IMPORTANT
When working in the engine compartment, take care as the radiator fan(s) may start up unexpectedly (risk of being cut).

To avoid any risk of serious burns when the engine is hot:

- do not open the expansion bottle cap,
- do not drain the cooling system,
- do not open the bleed screw(s).

WARNING
When carrying out a repair that requires a complete change, it is essential to flush the circuit with clean water, blast compressed air through the circuit to drive out the water, fill and bleed the circuit and then measure the effective protection.

The criteria to be met are:

- protection down to **-25°C ± 2** for cold and temperate countries,
- protection down to **-40°C ± 2** for "extreme cold" countries.

REMOVAL

I - REMOVAL PREPARATION OPERATION

❑ Position the vehicle on a two-post lift (see **Vehicle: Towing and lifting**) (02A, Lifting equipment).

❑ Disconnect the battery (see **Battery: Removal - Refitting**) (80A, Battery).

❑ Remove:

- the engine cover,
- the engine undertray bolts,
- the engine undertray,
- the front wheels (see **Wheel: Removal - Refitting**) (35A, Wheels and tyres),
- the front section of the front wheel arch liners (see **Front wheel arch liner: Removal - Refitting**) (55A, Exterior protection),
- the front bumper (see **Front bumper: Removal - Refitting**) (55A, Exterior protection).

❑ Drain the cooling system (see **19A**, **Cooling**, **Cooling circuit: Draining - Refilling**, page **19A-17**) .

❑ Remove:

- the upper air deflector,
- the side air deflectors,
- the headlights (see **Front headlight: Removal - Refitting**) (80B, Headlights),
- the front bumper supports (see **Front bumper support: Removal - Refitting**) (42A, Front upper structure),
- the audible warning (see **Horn: Removal - Refitting**) (82B, Horn),
- the intercooler (see **12B**, **Turbocharging**, **Intercooler: Removal - Refitting**, page **12B-37**) .

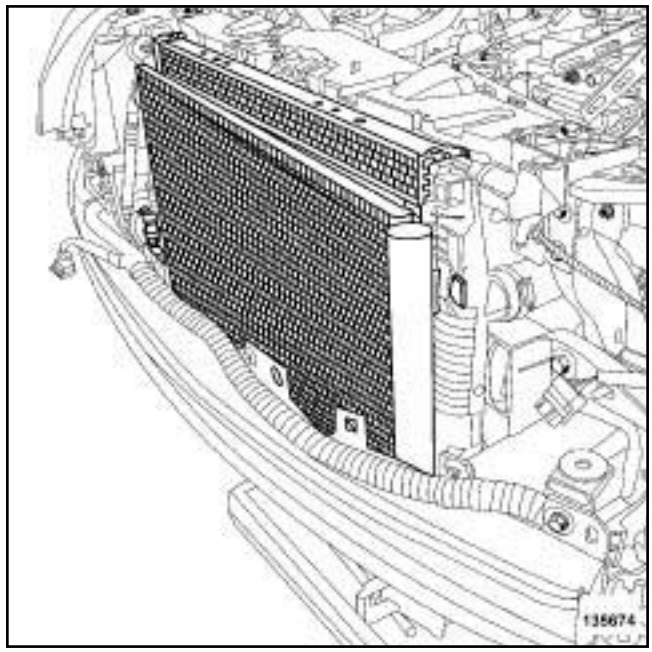

135674

❑ Unclip the condenser from the cooling radiator.

F4R

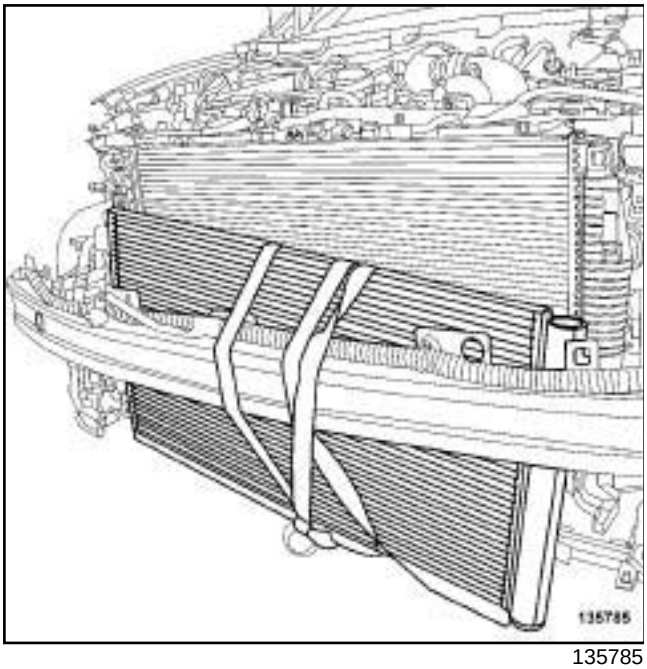

135785

❑ Attach the condenser to the front impact cross member using a **safety strap(s)**.

II - OPERATION FOR REMOVAL OF PART CONCERNED

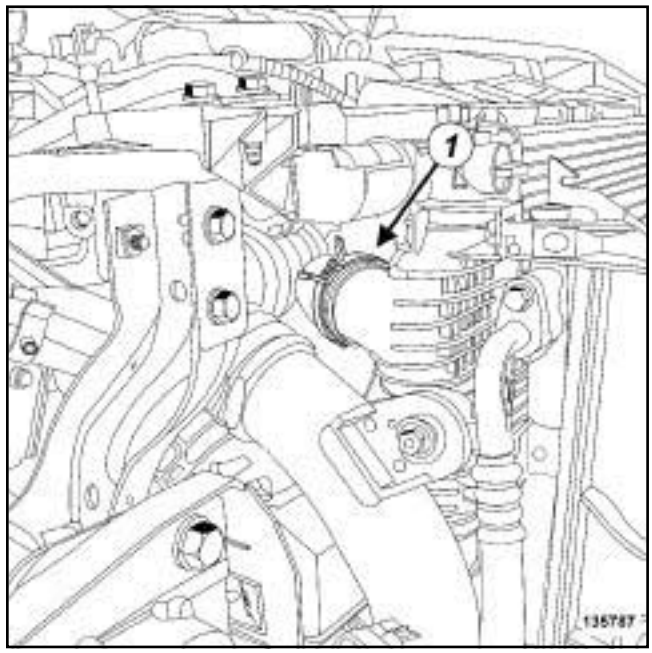

135787

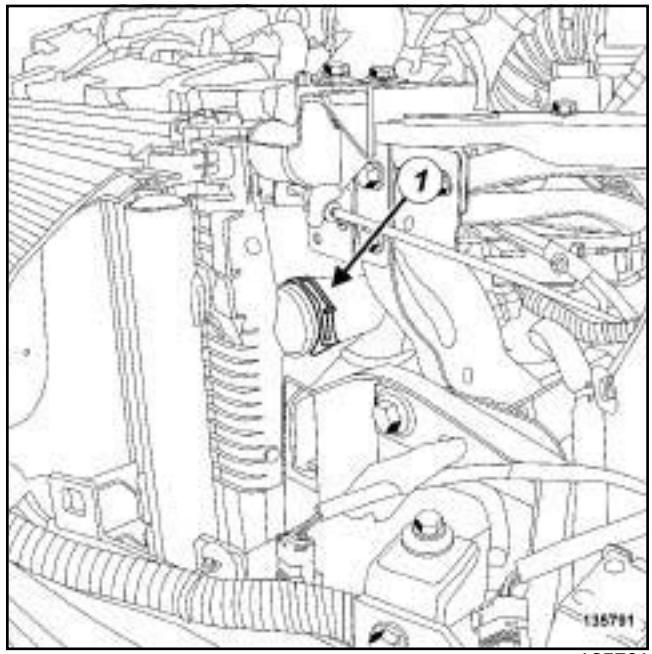

135791

❑ Remove the clips (**1**) from the cooling radiator hoses using the tool **(Mot. 1448)**.

❑ Disconnect the hoses from the cooling radiator.

F4R

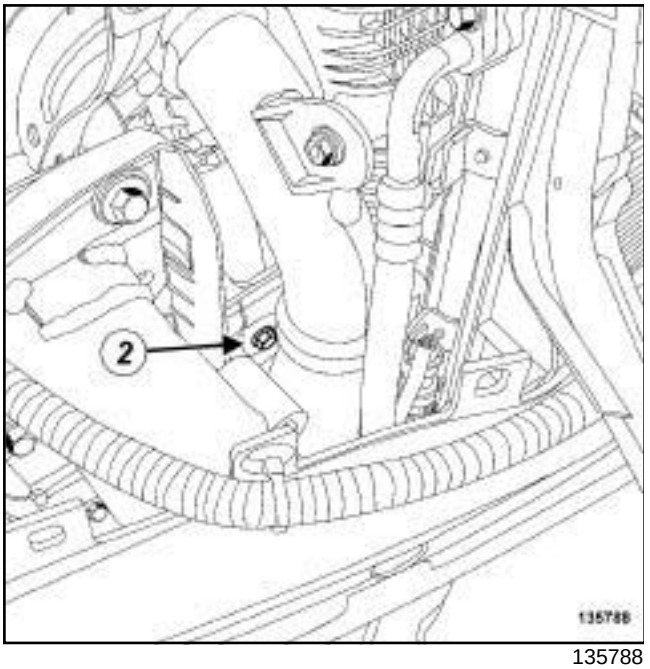

135788

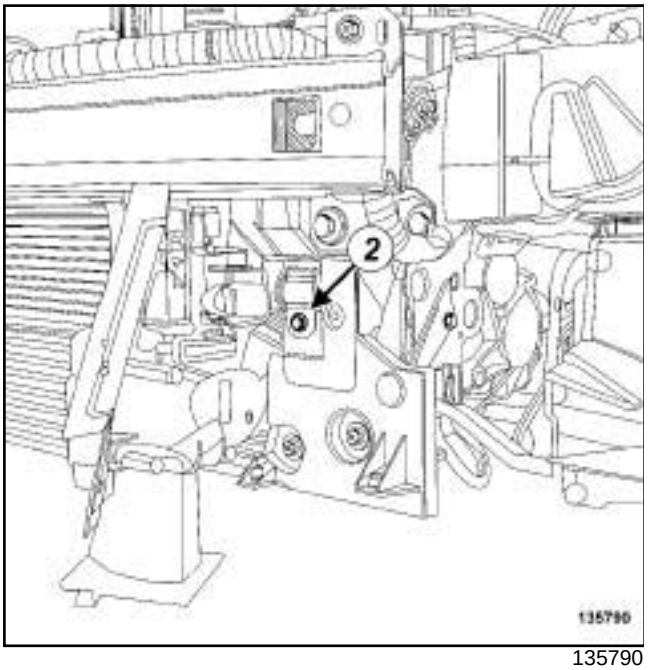

135790

❑ Remove:

- the retaining bracket bolts (**2**) on the cooling radiator,
- the retaining brackets on the cooling radiator,
- the cooling radiator.

REFITTING

I - REFITTING OPERATION FOR PART CONCERNED

❑ Refit:

- the cooling radiator,
- the retaining brackets on the cooling radiator.

❑ Connect the cooling radiator hoses.

❑ Fit the cooling radiator hose clips using the tool **(Mot. 1448)**.

II - FINAL OPERATION

❑ Detach the condenser from the front impact cross member.

❑ Clip on the cooling radiator condenser.

❑ Refit:

- the intercooler (see **12B**, **Turbocharging**, **Intercooler: Removal - Refitting**, page **12B-37**) ,
- the audible warning (see **Horn: Removal - Refitting**) (82B, Horn),
- the front bumper supports (see **Front bumper support: Removal - Refitting**) (42A, Front upper structure),
- the headlights (see **Front headlight: Removal - Refitting**) (80B, Headlights),
- the side air deflectors,
- the upper air deflector,
- the front bumper (see **Front bumper: Removal - Refitting**) (55A, Exterior protection),
- the front section of the front wheel arch liners (see **Front wheel arch liner: Removal - Refitting**) (55A, Exterior protection),
- the front wheels (see **Wheel: Removal - Refitting**) (35A, Wheels and tyres),
- the engine undertray,
- the engine cover.

❑ Connect the battery (see **Battery: Removal - Refitting**) (80A, Battery).

❑ Fill and bleed the cooling system (see **19A**, **Cooling**, **Cooling circuit: Draining - Refilling**, page **19A-17**) .

F4R

Tightening torques ▽	
coolant pump bolts	**12 N.m**

IMPORTANT

When working in the engine compartment, take care as the radiator fan(s) may start up unexpectedly (risk of being cut).

To avoid any risk of serious burns when the engine is hot:

- do not open the expansion bottle cap,
- do not drain the cooling system,
- do not open the bleed screw(s).

WARNING

Prepare for the flow of fluid, and protect the surrounding components.

WARNING

When carrying out a repair that requires a complete change, it is essential to flush the circuit with clean water, blast compressed air through the circuit to drive out the water, fill and bleed the circuit and then measure the effective protection.

The criteria to be met are:

- protection down to **-25°C ± 2** for cold and temperate countries,
- protection down to **-40°C ± 2** for "extreme cold" countries.

REMOVAL

I - REMOVAL PREPARATION OPERATION

❑ Position the vehicle on a two-post lift (see **Vehicle: Towing and lifting**) (02A, Lifting equipment).

❑ Remove:

- the engine cover,
- the battery (see **Battery: Removal - Refitting**) (80A, Battery),
- the battery tray (see **Battery tray: Removal - Refitting**) (80A, Battery),
- the engine undertray bolts,
- the engine undertray,
- the front wheels (see **Wheel: Removal - Refitting**) (35A, Wheels and tyres),
- the front section of the front wheel arch liners (see **Front wheel arch liner: Removal - Refitting**) (55A, Exterior protection),
- the front bumper (see **Front bumper: Removal - Refitting**) (55A, Exterior protection),
- the radiator mounting cross member (see **Radiator support cross member: Removal - Refitting**) (31A, Front axle components),
- the accessories belt (see **11A**, **Top and front of engine**, **Accessories belt: Removal - Refitting**, page **11A-7**) ,
- the crankshaft accessories pulley (see **11A**, **Top and front of engine**, **Crankshaft accessories pulley: Removal - Refitting**, page **11A-15**) ,
- the lower engine tie-bar (see **19D**, **Engine mounting**, **Lower engine tie-bar: Removal - Refitting**, page **19D-33**) ,
- the windscreen wiper arms (see **Windscreen wiper arm: Removal - Refitting**) (85A, Wiping - Washing),
- the scuttle panel grille (see **Scuttle panel grille: Removal - Refitting**) (56A, Exterior equipment),
- the scoop under the scuttle panel grille (see **Scoop under scuttle panel grille: Removal - Refitting**) (56A, Exterior equipment),
- the right-hand suspended engine mounting (see **19D**, **Engine mounting**, **Right-hand suspended engine mounting: Removal - Refitting**, page **19D-18**) ,
- the timing belt (see **11A**, **Top and front of engine**, **Timing belt: Removal - Refitting**, page **11A-29**) .

❑ Drain the cooling system (see **19A**, **Cooling**, **Cooling circuit: Draining - Refilling**, page **19A-17**) .

F4R

II - OPERATION FOR REMOVAL OF PART CONCERNED

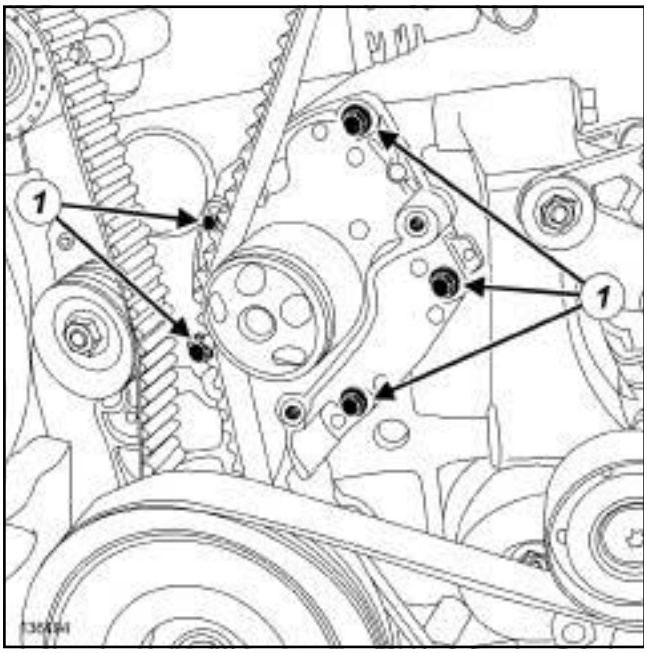

136494

❑

> Note:
>
> The coolant pump bolts are not the same length, mark their position.

❑ Remove:

- the coolant pump bolts (**1**) ,
- the coolant pump,
- the coolant pump seal.

REFITTING

I - REFITTING PREPARATION OPERATION

❑ **parts always to be replaced: Coolant pump seal (10,06,01,21)**.

> **IMPORTANT**
>
> Wear goggles with side protectors for this operation.

> **WARNING**
>
> Do not scrape the joint faces of the aluminium, any damage caused to the joint face will result in a risk of leaks.

> **WARNING**
>
> To ensure proper sealing, the gasket surfaces must be clean, dry and not greasy (avoid any finger marks).

❑ Clean the joint faces with **SUPER CLEANING AGENT FOR JOINT FACES** (see **Vehicle: Parts and ingredients for the repairwork**) (04B, Consumables - Products).

II - REFITTING OPERATION FOR PARTS CONCERNED

❑ Refit a new gasket to the coolant pump.

❑ Coat the coolant pump bolts with **FRENETANCHE** (see **Vehicle: Parts and ingredients for the repairwork**) (04B, Consumables - Products).

❑ Refit:

- the coolant pump,
- the coolant pump bolts.

F4R

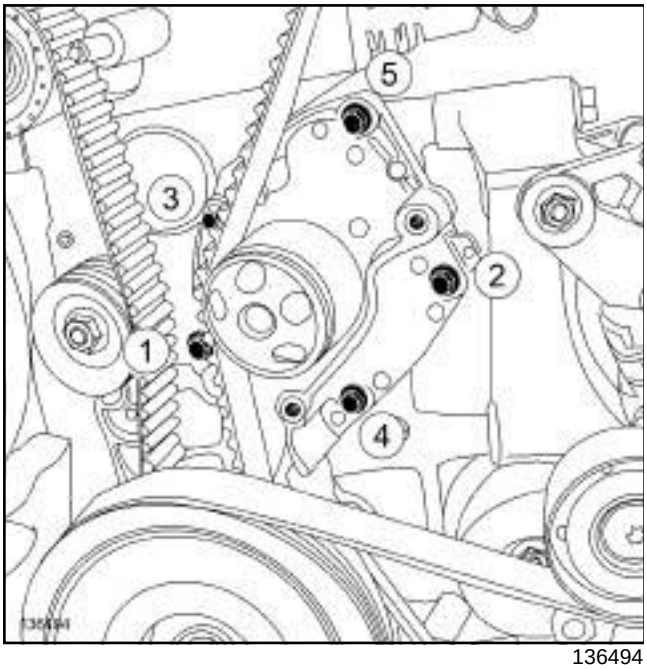

136494

❑ Tighten to torque and in order the **coolant pump bolts (12 N.m)**.

III - FINAL OPERATION

❑ Refit:

- the timing belt (see **11A**, **Top and front of engine**, **Timing belt: Removal - Refitting**, page **11A-29**) ,
- the right-hand suspended engine mounting (see **19D**, **Engine mounting**, **Right-hand suspended engine mounting: Removal - Refitting**, page **19D-18**) ,
- the scoop under the scuttle panel grille (see **Scoop under scuttle panel grille: Removal - Refitting**) (56A, Exterior equipment),
- the scuttle panel grille (see **Scuttle panel grille: Removal - Refitting**) (56A, Exterior equipment),
- the windscreen wiper arms (see **Windscreen wiper arm: Removal - Refitting**) (85A, Wiping - Washing),
- the lower engine tie-bar (see **19D**, **Engine mounting**, **Lower engine tie-bar: Removal - Refitting**, page **19D-33**) ,
- the crankshaft accessories pulley (see **11A**, **Top and front of engine**, **Crankshaft accessories pulley: Removal - Refitting**, page **11A-15**) ,
- the accessories belt (see **11A**, **Top and front of engine**, **Accessories belt: Removal - Refitting**, page **11A-7**) ,
- the radiator mounting cross member (see **Radiator support cross member: Removal - Refitting**) (31A, Front axle components),
- the front bumper (see **Front bumper: Removal - Refitting**) (55A, Exterior protection),
- the front section of the front wheel arch liners (see **Front wheel arch liner: Removal - Refitting**) (55A, Exterior protection),
- the front wheels (see **Wheel: Removal - Refitting**) (35A, Wheels and tyres),
- the engine undertray,
- the battery tray (see **Battery tray: Removal - Refitting**) (80A, Battery),
- the battery (see **Battery: Removal - Refitting**) (80A, Battery),
- the engine cover.

❑ Fill and bleed the cooling system (see **19A**, **Cooling**, **Cooling circuit: Draining - Refilling**, page **19A-17**) .

K4M

Tightening torques ▽	
bolts 2 to 8 of the coolant pump	**10 N.m**
bolt 1 of the coolant pump	**27 N.m**

IMPORTANT

When working in the engine compartment, take care as the radiator fan(s) may start up unexpectedly (risk of being cut).

To avoid any risk of serious burns when the engine is hot:

- do not open the expansion bottle cap,
- do not drain the cooling system,
- do not open the bleed screw(s).

WARNING

Prepare for the flow of fluid, and protect the surrounding components.

WARNING

When carrying out a repair that requires a complete change, it is essential to flush the circuit with clean water, blast compressed air through the circuit to drive out the water, fill and bleed the circuit and then measure the effective protection.

The criteria to be met are:

- protection down to **-25°C ± 2** for cold and temperate countries,
- protection down to **-40°C ± 2** for "extreme cold" countries.

REMOVAL

I - REMOVAL PREPARATION OPERATION

❏ Position the vehicle on a two-post lift (see **Vehicle: Towing and lifting**) (02A, Lifting equipment).

❏ Disconnect the battery (see **Battery: Removal - Refitting**) (80A, Battery).

❏ Remove:

- the engine cover,
- the throttle valve (see **12A**, **Fuel mixture**, **Throttle valve: Removal - Refitting**, page **12A-17**) ,
- the front wheels (see **Wheel: Removal - Refitting**) (35A, Wheels and tyres),
- the front section of the front wheel arch liners (see **Front wheel arch liner: Removal - Refitting**) (55A, Exterior protection),
- the engine undertray bolts,
- the engine undertray,
- the front bumper (see **Front bumper: Removal - Refitting**) (55A, Exterior protection).

❏ Drain the cooling system (see **19A**, **Cooling**, **Cooling circuit: Draining - Refilling**, page **19A-17**) .

❏ Remove:

- the windscreen wiper arms (see **Windscreen wiper arm: Removal - Refitting**) (85A, Wiping - Washing),
- the scuttle panel grille (see **Scuttle panel grille: Removal - Refitting**) (56A, Exterior equipment),
- the scoop under the scuttle panel grille (see **Scoop under scuttle panel grille: Removal - Refitting**) (56A, Exterior equipment),
- the lower engine tie-bar (see **19D**, **Engine mounting**, **Lower engine tie-bar: Removal - Refitting**, page **19D-33**) ,
- the accessories belt (see **11A**, **Top and front of engine**, **Accessories belt: Removal - Refitting**, page **11A-7**) ,
- the crankshaft accessories pulley (see **11A**, **Top and front of engine**, **Crankshaft accessories pulley: Removal - Refitting**, page **11A-15**) ,
- the right-hand suspended engine mounting (see **19D**, **Engine mounting**, **Right-hand suspended engine mounting: Removal - Refitting**, page **19D-18**) ,
- the timing belt (see **11A**, **Top and front of engine**, **Timing belt: Removal - Refitting**, page **11A-29**) .

K4M

II - OPERATION FOR REMOVAL OF PART CONCERNED

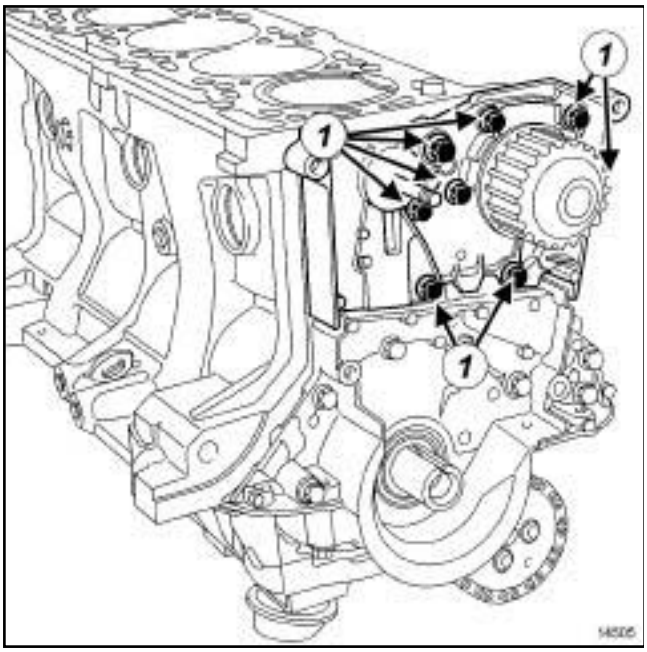

14505

❑ Remove:

- the coolant pump bolts (**1**) ,
- the coolant pump.

REFITTING

I - REFITTING PREPARATION OPERATION

❑

> **WARNING**
> Do not scrape the joint faces of the aluminium, any damage caused to the joint face will result in a risk of leaks.

> **WARNING**
> To ensure proper sealing, the gasket surfaces must be clean, dry and not greasy (avoid any finger marks).

> **IMPORTANT**
> Wear goggles with side protectors for this operation.

> **IMPORTANT**
> Wear leaktight gloves (Nitrile type) for this operation.

❑ Use **SUPER CLEANING AGENT FOR JOINT FACES** (see **Vehicle: Parts and ingredients for the repairwork**) (04B, Consumables - Products) to clean:

- the coolant pump sealing face if it is to be reused,
- the cylinder block gasket face.

❑ Use **SURFACE CLEANER** (see **Vehicle: Parts and ingredients for the repairwork**) (04B, Consumables - Products) to degrease:

- the coolant pump sealing face if it is to be reused,
- the cylinder block gasket face.

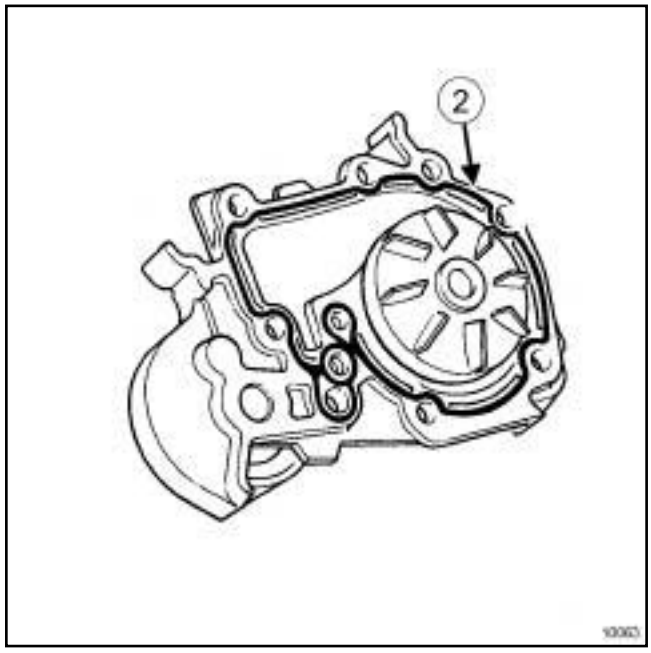

10063

❑

> **WARNING**
> Applying excess sealant could cause it to be squeezed out when parts are tightened. A mixture of sealant and fluid could damage certain components (engine, radiator, etc.).

❑ Apply a bead (**2**) of **RESIN ADHESIVE** (see **Vehicle: Parts and ingredients for the repairwork**) (04B, Consumables - Products) with a width of **0,6 à 1 mm**.

K4M

II - REFITTING OPERATION FOR PART CONCERNED

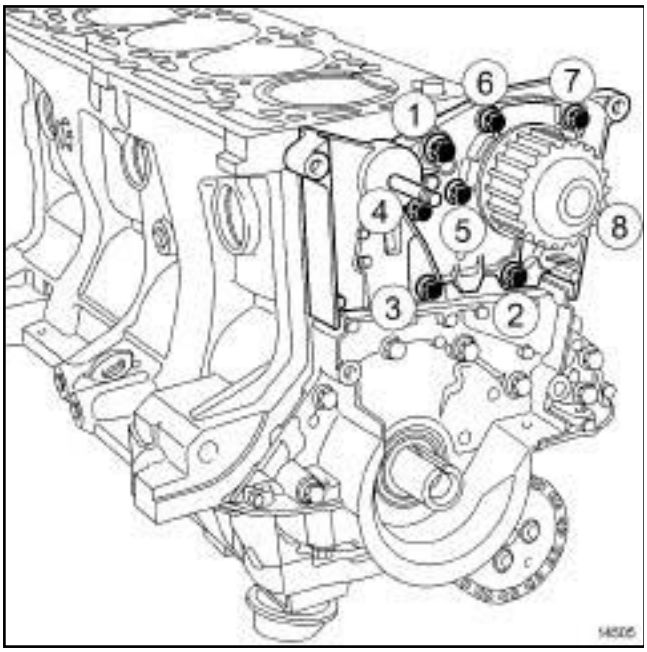

14505

❑

> Note:
>
> Apply one to two drops of **FRENETANCHE** (see **Vehicle: Parts and ingredients for the repairwork**) (04B, Consumables - Products) to the coolant pump bolts (**1**) and (**5**) .

❑ Refit the coolant pump.

❑ Fit the coolant pump bolts without tightening them.

❑ Tighten to torque and in order:

- the **bolts 2 to 8 of the coolant pump (10 N.m)**,
- the **bolt 1 of the coolant pump (27 N.m)**.

III - FINAL OPERATION

❑ Refit:

- the timing belt (see **11A**, **Top and front of engine**, **Timing belt: Removal - Refitting**, page **11A-29**) ,
- the right-hand suspended engine mounting (see **19D**, **Engine mounting**, **Right-hand suspended engine mounting: Removal - Refitting**, page **19D-18**) ,
- the crankshaft accessories pulley (see **11A**, **Top and front of engine**, **Crankshaft accessories pulley: Removal - Refitting**, page **11A-15**) ,
- the accessories belt (see **11A**, **Top and front of engine**, **Accessories belt: Removal - Refitting**, page **11A-7**) ,
- the lower engine tie-bar (see **19D**, **Engine mounting**, **Lower engine tie-bar: Removal - Refitting**, page **19D-33**) ,
- the scoop under the scuttle panel grille (see **Scoop under scuttle panel grille: Removal - Refitting**) (56A, Exterior equipment),
- the scuttle panel grille (see **Scuttle panel grille: Removal - Refitting**) (56A, Exterior equipment),
- the windscreen wiper arms (see **Windscreen wiper arm: Removal - Refitting**) (85A, Wiping - Washing),
- the front bumper (see **Front bumper: Removal - Refitting**) (55A, Exterior protection),
- the front section of the front wheel arch liners (see **Front wheel arch liner: Removal - Refitting**) (55A, Exterior protection),
- the front wheels (see **Wheel: Removal - Refitting**) (35A, Wheels and tyres),
- the throttle valve (see **12A**, **Fuel mixture**, **Throttle valve: Removal - Refitting**, page **12A-17**) ,
- the engine cover.

❑ Connect the battery (see **Battery: Removal - Refitting**) (80A, Battery).

❑ Fill and bleed the cooling system (see **19A**, **Cooling**, **Cooling circuit: Draining - Refilling**, page **19A-17**) .

❑ Refit the engine undertray.

K9K

Tightening torques ▽	
coolant pump bolts	**10 N.m**
alternator lower bolt	**25 N.m**
alternator upper bolt	**25 N.m**

IMPORTANT
Wear leaktight gloves (Nitrile type) for this operation.

REMOVAL

I - REMOVAL PREPARATION OPERATION

❑ Position the vehicle on a two-post lift (see **Vehicle: Towing and lifting**) (02A, Lifting equipment).

❑ Disconnect the battery (see **Battery: Removal - Refitting**) (80A, Battery).

❑ Remove:

- the engine cover,
- the front wheels (see **Wheel: Removal - Refitting**) (35A, Wheels and tyres),
- the front section of the front wheel arch liners (see **Front wheel arch liner: Removal - Refitting**) (55A, Exterior protection),
- the engine undertray bolts,
- the engine undertray,
- the front bumper (see **Front bumper: Removal - Refitting**) (55A, Exterior protection),
- the accessories belt (see **11A**, **Top and front of engine**, **Accessories belt: Removal - Refitting**, page **11A-7**) .

❑ Drain the cooling system (see **19A**, **Cooling**, **Cooling circuit: Draining - Refilling**, page **19A-17**) .

❑ Remove:

- the windscreen wiper arms (see **Windscreen wiper arm: Removal - Refitting**) (85A, Wiping - Washing),
- the scuttle panel grille (see **Scuttle panel grille: Removal - Refitting**) (56A, Exterior equipment),
- the scoop under the scuttle panel grille (see **Scoop under scuttle panel grille: Removal - Refitting**) (56A, Exterior equipment),
- the right-hand suspended engine mounting (see **19D**, **Engine mounting**, **Right-hand suspended engine mounting: Removal - Refitting**, page **19D-18**) ,
- the timing belt (see **11A**, **Top and front of engine**, **Timing belt: Removal - Refitting**, page **11A-29**) .

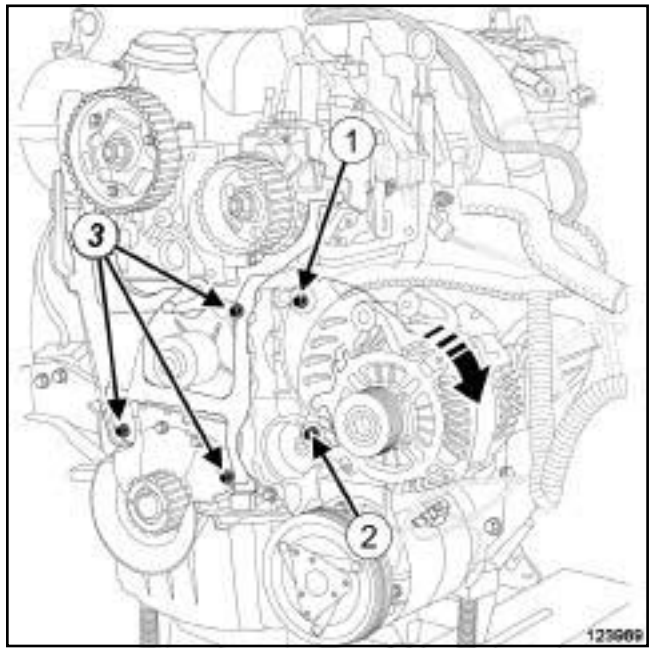

123969

❑ Remove the alternator upper bolt (**1**) .

❑ Loosen the alternator lower bolt (**2**) .

❑ Tilt the alternator slightly towards the front of the vehicle.

❑ Remove:

- the bolts (**3**) from the inner cover,
- the inner cover.

K9K

II - OPERATION FOR REMOVAL OF PART CONCERNED

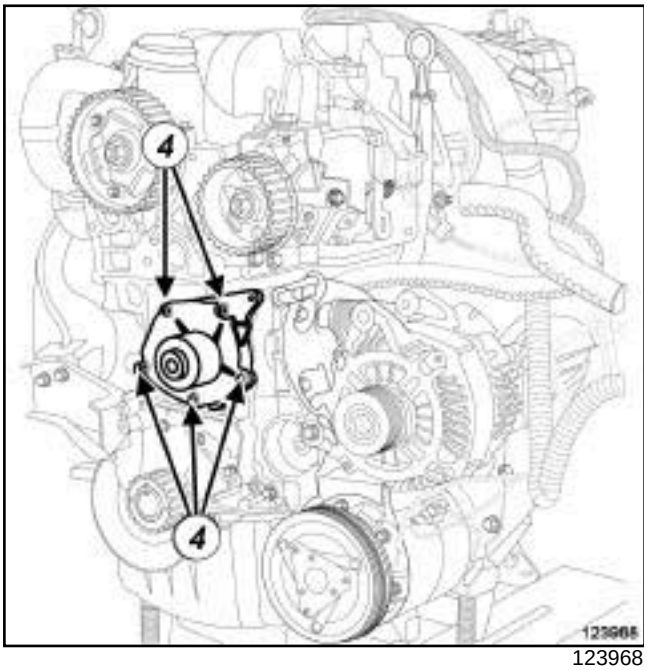

123968

❑ Remove:

- the coolant pump bolts (**4**) ,
- the coolant pump,
- the coolant pump seal.

REFITTING

I - REFITTING PREPARATION OPERATION

❑ **parts always to be replaced: Coolant pump seal (10,06,01,21)**.

> **IMPORTANT**
> Wear goggles with side protectors for this operation.

> **WARNING**
> Do not scrape the joint faces of the aluminium, any damage caused to the joint face will result in a risk of leaks.

❑ Use **SURFACE CLEANER** (see **Vehicle: Parts and ingredients for the repairwork**) (04B, Consumables - Products) to clean and degrease:

- the coolant pump sealing face if it is to be reused,
- the cylinder block gasket face.

II - REFITTING OPERATION FOR PART CONCERNED

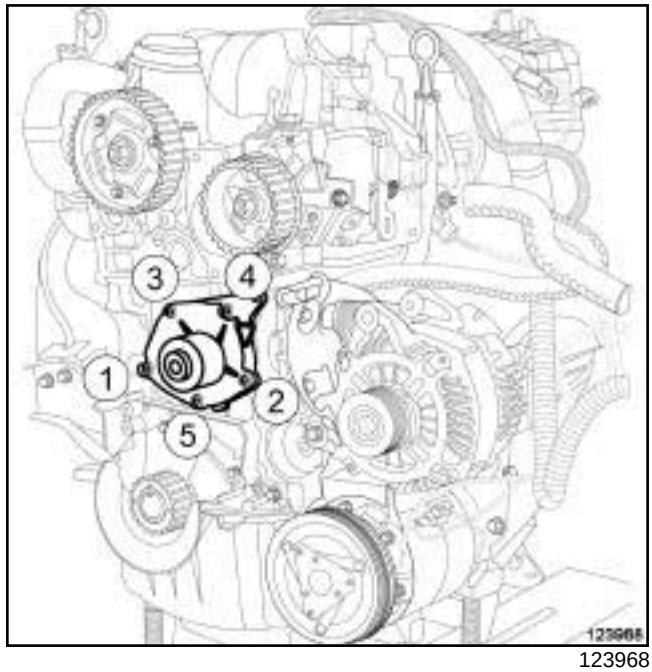

123968

❑ Refit:

- a new coolant pump seal,
- the coolant pump,
- the bolts (**2**) and (**5**) of the coolant pump.

❑ Apply one or two drops of **FRENETANCHE** (see **Vehicle: Parts and ingredients for the repairwork**) (04B, Consumables - Products) to the coolant pump bolt (**3**) .

❑ Refit:

- the bolt (**3**) of the coolant pump,
- the bolts (**1**) and (**4**) of the coolant pump.

❑ Torque tighten in order the **coolant pump bolts (10 N.m)**.

III - FINAL OPERATION

❑ Refit the inner cover.

❑ Fit the alternator in place.

❑ Refit the alternator upper bolt.

❑ Tighten to torque:

- the **alternator lower bolt (25 N.m)**,
- the **alternator upper bolt (25 N.m)**.

❑ Refit:

- the timing belt (see **11A**, **Top and front of engine**, **Timing belt: Removal - Refitting**, page **11A-29**) ,

- the right-hand suspended engine mounting (see **19D**, **Engine mounting**, **Right-hand suspended engine mounting: Removal - Refitting**, page **19D-18**) ,
- the scoop under the scuttle panel grille (see **Scoop under scuttle panel grille: Removal - Refitting**) (56A, Exterior equipment),
- the scuttle panel grille (see **Scuttle panel grille: Removal - Refitting**) (56A, Exterior equipment),
- the windscreen wiper arms (see **Windscreen wiper arm: Removal - Refitting**) (85A, Wiping - Washing),
- the accessories belt (see **11A**, **Top and front of engine**, **Accessories belt: Removal - Refitting**, page **11A-7**) ,
- the front bumper (see **Front bumper: Removal - Refitting**) (55A, Exterior protection),
- the engine undertray,
- the front section of the front wheel arch liners (see **Front wheel arch liner: Removal - Refitting**) (55A, Exterior protection),
- the front wheels (see **Wheel: Removal - Refitting**) (35A, Wheels and tyres),
- the engine cover.

❏ Connect the battery (see **Battery : Removal - Refitting**) (80A, Battery).

❏ Fill and bleed the cooling system (see **19A**, **Cooling**, **Cooling circuit: Draining - Refilling**, page **19A-17**) .

F9Q

Tightening torques ▽	
coolant pump bolts	**12 N.m**

IMPORTANT

When working in the engine compartment, take care as the radiator fan(s) may start up unexpectedly (risk of being cut).

To avoid any risk of serious burns when the engine is hot:

- do not open the expansion bottle cap,
- do not drain the cooling system,
- do not open the bleed screw(s).

WARNING

Prepare for the flow of fluid, and protect the surrounding components.

WARNING

When carrying out a repair that requires a complete change, it is essential to flush the circuit with clean water, blast compressed air through the circuit to drive out the water, fill and bleed the circuit and then measure the effective protection.

The criteria to be met are:

- protection down to **-25°C ± 2** for cold and temperate countries,
- protection down to **-40°C ± 2** for "extreme cold" countries.

REMOVAL

I - REMOVAL PREPARATION OPERATION

❏ Position the vehicle on a two-post lift (see **Vehicle: Towing and lifting**) (02A, Lifting equipment).

❏ Disconnect the battery (see **Battery: Removal - Refitting**) (80A, Battery).

❏ Remove:

- the engine undertray bolts,
- the engine undertray.

❏ Drain the cooling system (see **19A**, **Cooling**, **Cooling circuit: Draining - Refilling**, page **19A-17**) .

❏ Remove:

- the engine cover,
- the scuttle panel grille (see **Scuttle panel grille: Removal - Refitting**) (56A, Exterior equipment),
- the scoop under the scuttle panel grille (see **Scoop under scuttle panel grille: Removal - Refitting**) (56A, Exterior equipment),
- the front right-hand wheel (see **Wheel: Removal - Refitting**) (35A, Wheels and tyres),
- the front right-hand wheel arch liner (see **Front wheel arch liner: Removal - Refitting**) (55A, Exterior protection),
- the accessories belt (see **11A**, **Top and front of engine**, **Accessories belt: Removal - Refitting**, page **11A-7**) ,
- the lower engine tie-bar (see **19D**, **Engine mounting**, **Lower engine tie-bar: Removal - Refitting**, page **19D-33**) ,
- the crankshaft accessories pulley (see **11A**, **Top and front of engine**, **Crankshaft accessories pulley: Removal - Refitting**, page **11A-15**) ,
- the right-hand suspended engine mounting (see **19D**, **Engine mounting**, **Right-hand suspended engine mounting: Removal - Refitting**, page **19D-18**) ,
- the timing belt (see **11A**, **Top and front of engine**, **Timing belt: Removal - Refitting**, page **11A-29**) .

F9Q

II - OPERATION FOR REMOVAL OF PART CONCERNED

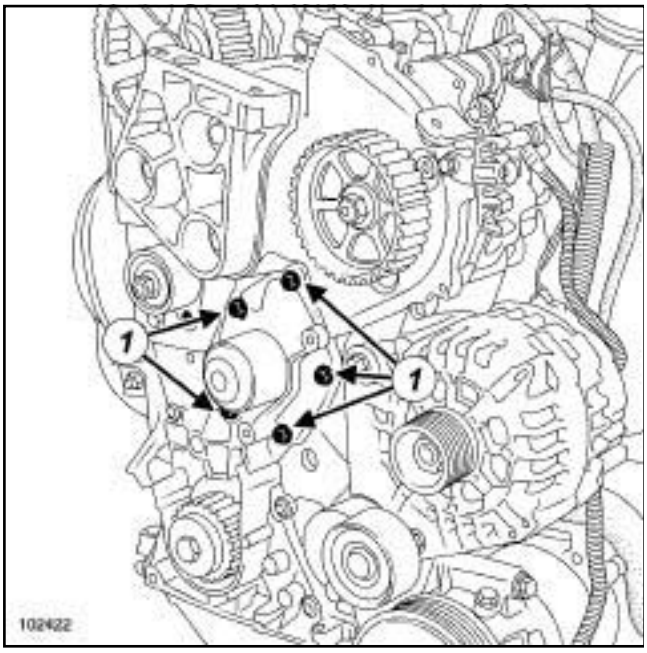

102422

❑ Remove:

- the coolant pump bolts (**1**) ,
- the coolant pump,
- the coolant pump seal.

REFITTING

I - REFITTING PREPARATION OPERATION

❑ **parts always to be replaced: Coolant pump seal (10,06,01,21)**.

> **WARNING**
> Do not scrape the joint faces of the aluminium, any damage caused to the joint face will result in a risk of leaks.

> **WARNING**
> To ensure proper sealing, the gasket surfaces must be clean, dry and not greasy (avoid any finger marks).

❑ Use **SURFACE CLEANER** (see **Vehicle: Parts and ingredients for the repairwork**) (04B, Consumables - Products) to clean and degrease:

- the coolant pump sealing face if it is to be reused,
- the cylinder block gasket face.

II - REFITTING OPERATION FOR PART CONCERNED

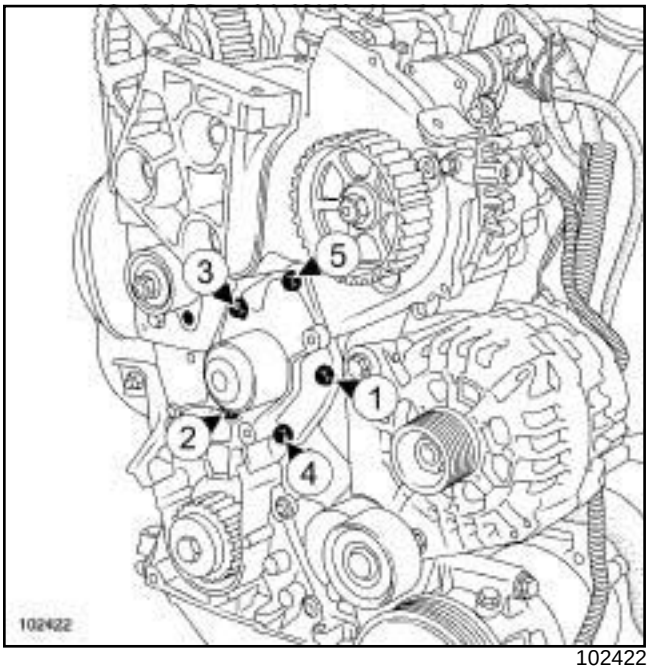

102422

❑

> Note:
> Apply one to two drops of **FRENETANCHE** (see **Vehicle: Parts and ingredients for the repairwork**) (04B, Consumables - Products) to the coolant pump bolts (**2**) and (**3**) .

❑ Refit:

- a new coolant pump seal,
- the coolant pump.

❑ Tighten to torque and in order the **coolant pump bolts (12 N.m)**.

III - FINAL OPERATION

❑ Refit:

- the timing belt (see **11A**, **Top and front of engine**, **Timing belt: Removal - Refitting**, page **11A-29**) ,
- the right-hand suspended engine mounting (see **19D**, **Engine mounting**, **Right-hand suspended engine mounting: Removal - Refitting**, page **19D-18**) ,
- the crankshaft accessories pulley (see **11A**, **Top and front of engine**, **Crankshaft accessories pulley: Removal - Refitting**, page **11A-15**) ,
- the lower engine tie-bar (see **19D**, **Engine mounting**, **Lower engine tie-bar: Removal - Refitting**, page **19D-33**) ,

F9Q

- the accessories belt (see **11A**, **Top and front of engine**, **Accessories belt: Removal - Refitting**, page **11A-7**) ,
- the front right-hand wheel arch liner (see **Front wheel arch liner: Removal - Refitting**) (55A, Exterior protection),
- the front right-hand wheel (see **Wheel: Removal - Refitting**) (35A, Wheels and tyres),
- the scoop under the scuttle panel grille (see **Scoop under scuttle panel grille: Removal - Refitting**) (56A, Exterior equipment),
- the scuttle panel grille (see **Scuttle panel grille: Removal - Refitting**) (56A, Exterior equipment),
- the engine cover.

❑ Connect the battery (see **Battery : Removal - Refitting**) (80A, Battery).

❑ Fill and bleed the cooling system (see **19A**, **Cooling**, **Cooling circuit: Draining - Refilling**, page **19A-17**) .

❑ Refit the engine undertray.

F9Q or K4M or K9K

- The thermostat cannot be separated from the water chamber.

  Replace the « water chamber - thermostat » assembly if the thermostat is faulty (see **19A**, **Cooling**, **Plenum chamber: Removal - Refitting**, page **19A-61**) .

F4R

Essential special tooling	
Mot. 1448	Long nose pliers for hose clips.

IMPORTANT

When working in the engine compartment, take care as the radiator fan(s) may start up unexpectedly (risk of being cut).

To avoid any risk of serious burns when the engine is hot:

- do not open the expansion bottle cap,
- do not drain the cooling system,
- do not open the bleed screw(s).

WARNING

When carrying out a repair that requires a complete change, it is essential to flush the circuit with clean water, blast compressed air through the circuit to drive out the water, fill and bleed the circuit and then measure the effective protection.

The criteria to be met are:

- protection down to **-25°C ± 2** for cold and temperate countries,
- protection down to **-40°C ± 2** for "extreme cold" countries.

WARNING

Before the operation, protect the electrical accessories to prevent any risk of short circuiting and protect the belts to avoid damaging them.

REMOVAL

I - REMOVAL PREPARATION OPERATION

❑ Position the vehicle on a two-post lift (see **Vehicle: Towing and lifting**) (02A, Lifting equipment).

❑ Remove:

- the engine cover,
- the front wheels (see **Wheel: Removal - Refitting**) (35A, Wheels and tyres),
- the front section of the front wheel arch liners (see **Front wheel arch liner: Removal - Refitting**) (55A, Exterior protection),
- the engine undertray bolts,
- the engine undertray,
- the front bumper (see **Front bumper: Removal - Refitting**) (55A, Exterior protection).

❑ Drain the cooling system (see **19A**, **Cooling**, **Cooling circuit: Draining - Refilling**, page **19A-17**) .

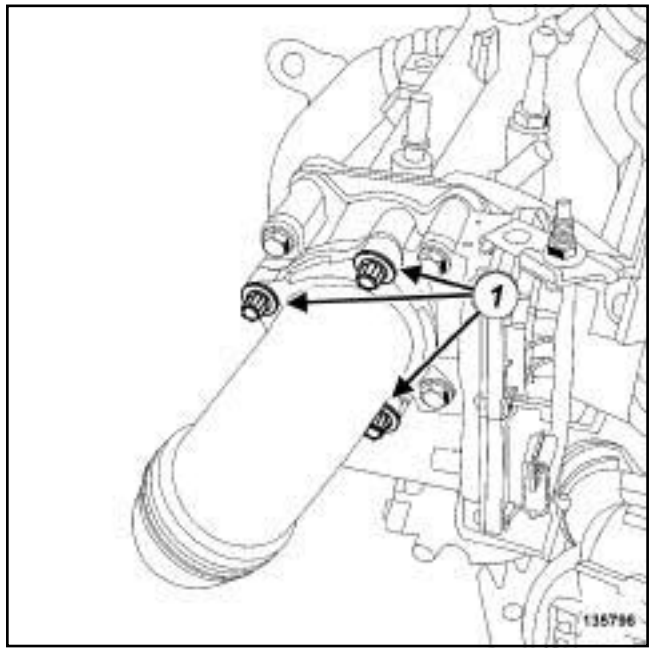

135796

❑ Remove the intercooler air outlet pipe bolts (**1**) .

❑ Move the intercooler outlet air pipe to one side.

❑ Remove the throttle valve (see **12A**, **Fuel mixture**, **Throttle valve: Removal - Refitting**, page **12A-17**) .

F4R

II - OPERATION FOR REMOVAL OF PART CONCERNED

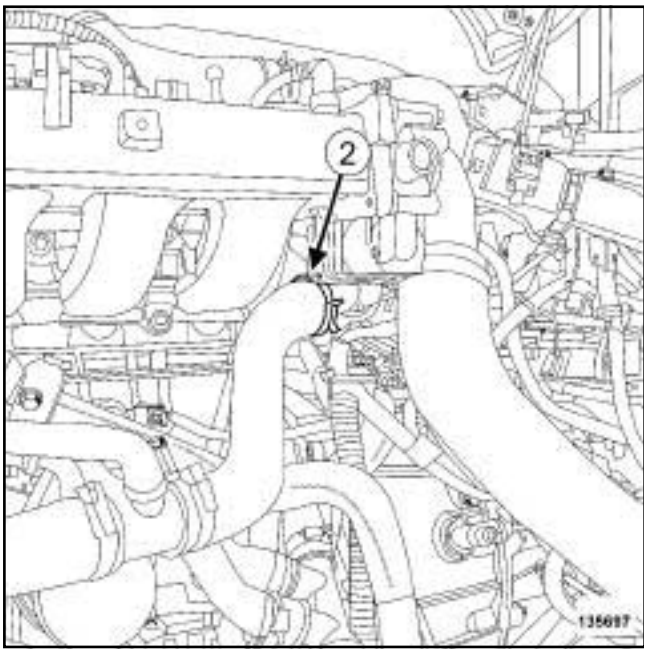

135697

❑ Using the tool **(Mot. 1448)**, separate the top hose clip (**2**) on the coolant outlet unit.

❑ Disconnect the top hose from the coolant outlet unit.

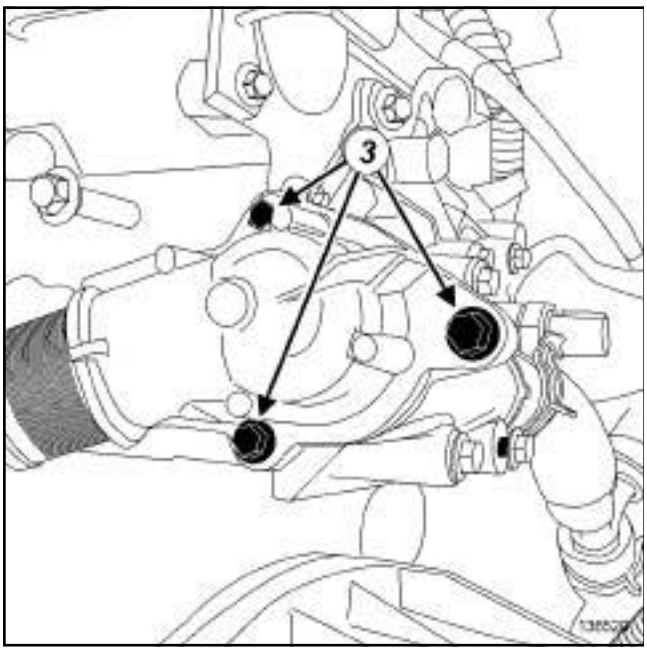

136520

❑ Remove:

- the thermostat cover bolts (**3**) ,
- the thermostat cover.

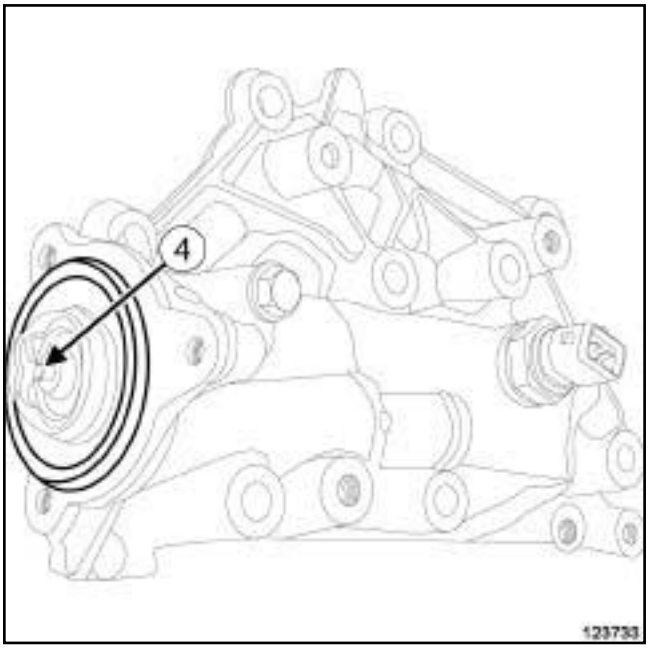

123733

❑ Remove:

- the thermostat (**4**) ,
- the thermostat seal.

REFITTING

I - REFITTING PREPARATION OPERATION

❑ **parts always to be replaced: Thermostat seal (10,06,03,03)**.

❑ Use **SURFACE CLEANER** (see **Vehicle: Parts and ingredients for the repairwork**) (04B, Consumables - Products) to clean and degrease the thermostat housing.

> **WARNING**
> To ensure proper sealing, the gasket surfaces must be clean, dry and not greasy (avoid any finger marks).

II - REFITTING OPERATION FOR PART CONCERNED

❑ Refit:

- a new seal on the thermostat,
- the thermostat,
- the thermostat cover.

❑ Connect the top hose to the coolant outlet unit.

F4R

- ❑ Fit the top hose clip on the coolant outlet unit using the tool **(Mot. 1448)**.

III - FINAL OPERATION

- ❑ Refit the throttle valve (see **12A**, **Fuel mixture**, **Throttle valve: Removal - Refitting**, page **12A-17**) .
- ❑ Fit the intercooler air outlet pipe.
- ❑ Refit:
  - the front bumper (see **Front bumper: Removal - Refitting**) (55A, Exterior protection),
  - the engine undertray,
  - the front section of the front wheel arch liners (see **Front wheel arch liner: Removal - Refitting**) (55A, Exterior protection),
  - the front wheels (see **Wheel: Removal - Refitting**) (35A, Wheels and tyres),
  - the engine cover.
- ❑ Fill and bleed the cooling system (see **19A**, **Cooling**, **Cooling circuit: Draining - Refilling**, page **19A-17**) .

K4M

Essential special tooling	
Mot. 1448	Long nose pliers for hose clips.

Tightening torques ▽	
coolant outlet unit bolts (initial torque)	**4 N.m**
coolant outlet unit bolts	**12 N.m**
heater matrix hose retaining bracket	**10 N.m**

IMPORTANT

When working in the engine compartment, take care as the radiator fan(s) may start up unexpectedly (risk of being cut).

To avoid any risk of serious burns when the engine is hot:

- do not open the expansion bottle cap,
- do not drain the cooling system,
- do not open the bleed screw(s).

WARNING

When carrying out a repair that requires a complete change, it is essential to flush the circuit with clean water, blast compressed air through the circuit to drive out the water, fill and bleed the circuit and then measure the effective protection.

The criteria to be met are:

- protection down to **-25°C ± 2** for cold and temperate countries,
- protection down to **-40°C ± 2** for "extreme cold" countries.

WARNING

Prepare for the flow of fluid, and protect the surrounding components.

REMOVAL

I - REMOVAL PREPARATION OPERATION

❑ Position the vehicle on a two-post lift (see **Vehicle: Towing and lifting**) (02A, Lifting equipment).

❑ Remove:

- the engine cover,
- the front wheels (see **Vehicle: Towing and lifting**) (35A, Wheels and tyres),
- the front section of the front wheel arch liners (see **Front wheel arch liner: Removal - Refitting**) (55A, Exterior protection),
- the engine undertray bolts,
- the engine undertray,
- the front bumper (see **Front bumper: Removal - Refitting**) (55A, Exterior protection).

❑ Drain the cooling system (see **Cooling circuit Draining**) .

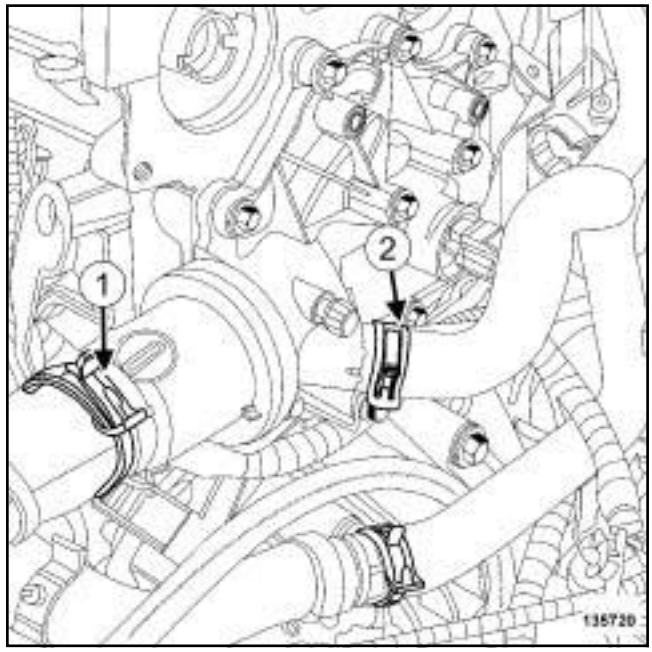

135720

❑ Remove using the **(Mot. 1448)** :

- the top hose clip (**1**) from the coolant outlet unit,
- the heater matrix hose clip (**2**) .

❑ Disconnect:

- the top hose on the coolant outlet unit,
- the heater matrix hose.

❑ Remove the coolant temperature sensor (see **19A**, **Cooling**, **Coolant temperature sensor: Removal - Refitting**, page **19A-101**) .

K4M

K4M, and 848

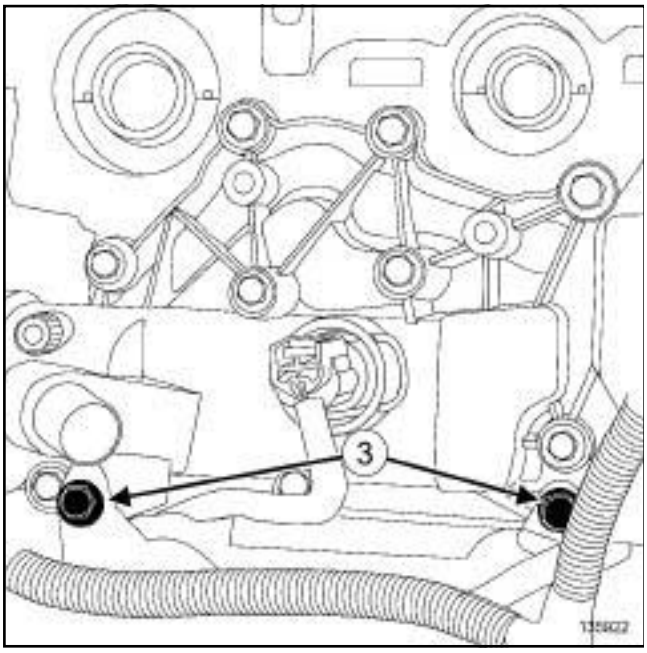

135922

❑ Disconnect the TDC sensor connector.

❑ Remove:

- the bolts (**3**) of the engine wiring channel,
- the engine harness channel.

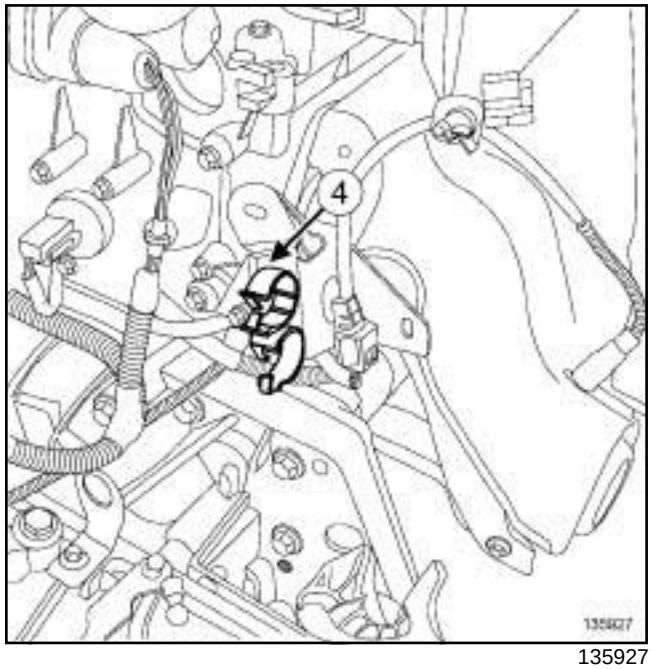

135927

❑ Unclip the heater matrix hoses from the retaining bracket (**4**) .

❑ Remove:

- the heater matrix hose retaining bracket bolt,
- the heater matrix hose retaining bracket.

II - OPERATION FOR REMOVAL OF PART CONCERNED

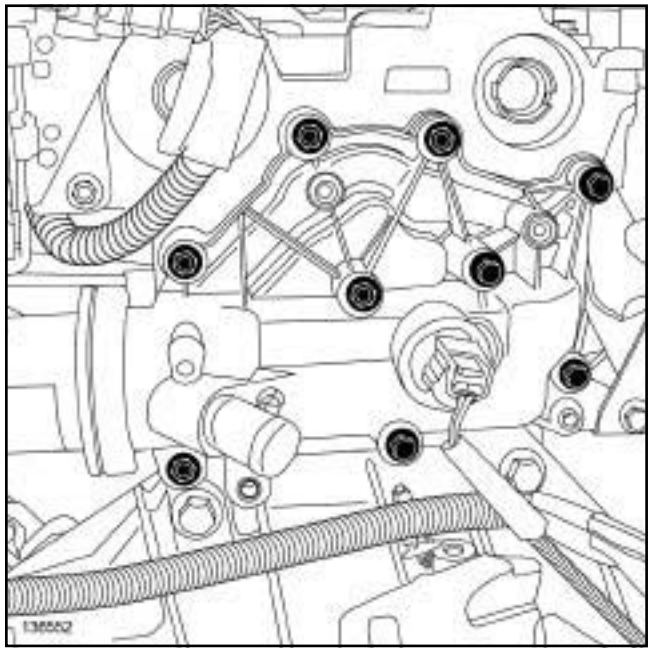

136552

❑ Remove:

- the coolant outlet unit bolts,

K4M

- the coolant outlet unit,
- the coolant outlet unit seal.

REFITTING

I - REFITTING PREPARATION OPERATION

❑ **parts always to be replaced: Cylinder head coolant outlet unit seal (10,06,01,19)**.

❑ Use **SURFACE CLEANER** (see **Vehicle: Parts and ingredients for the repairwork**) (04B, Consumables - Products) to clean and degrease:

- the cylinder head joint face,
- the coolant outlet unit housing if it is being reused.

> **WARNING**
> To ensure proper sealing, the gasket surfaces must be clean, dry and not greasy (avoid any finger marks).

II - REFITTING OPERATION FOR PART CONCERNED

❑ Refit the coolant outlet unit with a new seal.

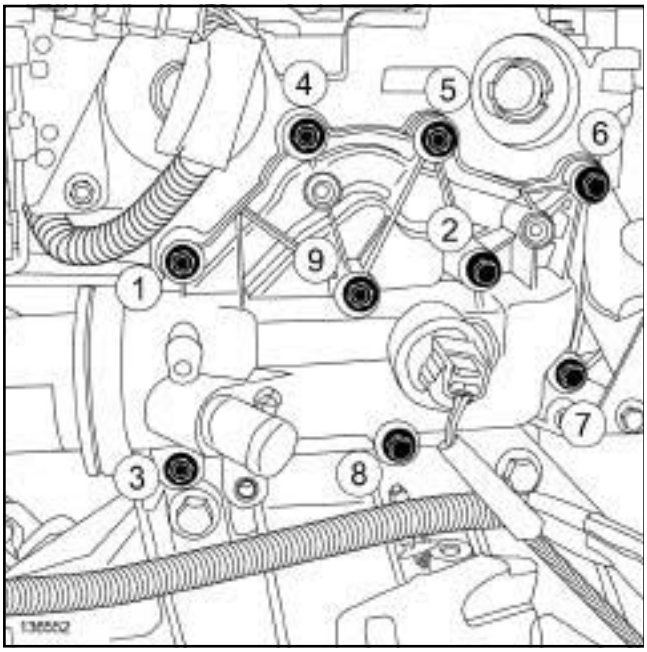

136552

❑ In order, fit (without tightening):

- the coolant outlet unit bolts (**1**) and (**6**) ,
- the bolts (**2**) , (**3**) , (**4**) , (**5**) , (**7**) , (**8**) , (**9**) .

❑ Tighten to torque and in order:

- the **coolant outlet unit bolts (initial torque) (4 N.m)**,
- the **coolant outlet unit bolts (12 N.m)**.

❑ Refit the heater matrix hose bracket on the retaining bracket.

❑ Torque tighten the **heater matrix hose retaining bracket (10 N.m)**.

❑ Clip the heater matrix hoses onto the retaining bracket.

III - FINAL OPERATION

K4M, and 848

❑ Refit the engine wiring channel.

❑ Connect the TDC sensor connector.

❑ Refit the coolant temperature sensor (see **19A**, **Cooling**, **Coolant temperature sensor: Removal - Refitting**, page **19A-101**) .

❑ Connect:

- the top hose on the coolant outlet unit,
- the heater matrix hose.

❑ Using the **(Mot. 1448)**, fit:

- the heater matrix hose clip,
- the cooling radiator top hose clip.

❑ Refit:

- the front bumper (see **Front bumper: Removal - Refitting**) (55A, Exterior protection),
- the engine undertray,
- the front section of the front wheel arch liners (see **Front wheel arch liner: Removal - Refitting**) (55A, Exterior protection),
- the front wheels (see **Vehicle: Towing and lifting**) (35A, Wheels and tyres),
- the engine cover.

❑ Fill and bleed the cooling system (see **19A**, **Cooling**, **Cooling circuit: Draining - Refilling**, page **19A-17**) .

K9K

Essential special tooling	
Mot. 1448	Long nose pliers for hose clips.
Car. 1363	Set of trim removal levers.

Tightening torques ▽	
coolant outlet unit bolts	**11 N.m**

REMOVAL

I - REMOVAL PREPARATION OPERATION

❑ Position the vehicle on a two-post lift (see **Vehicle: Towing and lifting**) (02A, Lifting equipment).

❑ Remove:

- the engine cover,
- the battery (see **Battery: Removal - Refitting**) (80A, Battery),
- the battery tray (see **Battery tray: Removal - Refitting**) (80A, Battery),
- the front wheels (see **Wheel: Removal - Refitting**) (35A, Wheels and tyres),
- the front section of the front wheel arch liners (see **Front wheel arch liner: Removal - Refitting**) (55A, Exterior protection),
- the engine undertray bolts,
- the engine undertray,
- the front bumper (see **Front bumper: Removal - Refitting**) (55A, Exterior protection).

❑ Drain the cooling system (see **19A**, **Cooling**, **Cooling circuit: Draining - Refilling**, page **19A-17**) .

II - OPERATION FOR REMOVAL OF PART CONCERNED

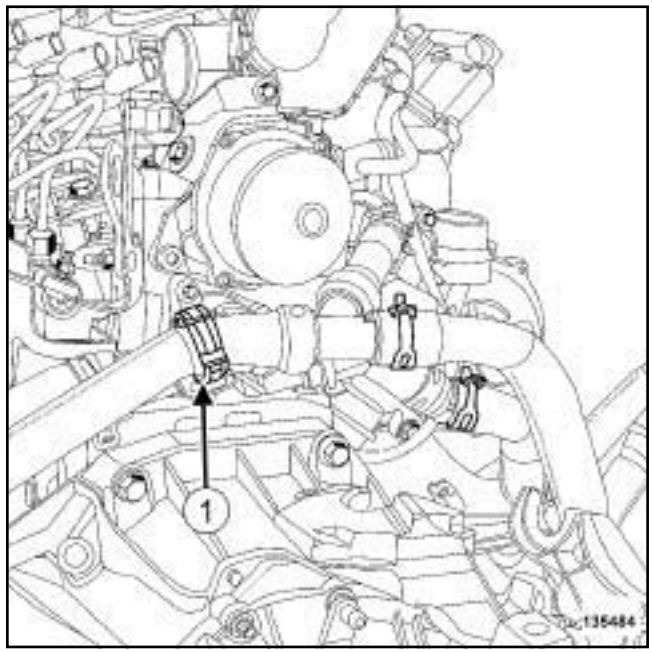

135484

❑ Unclip the expansion bottle bottom cooling hose from the coolant outlet unit at (**1**) .

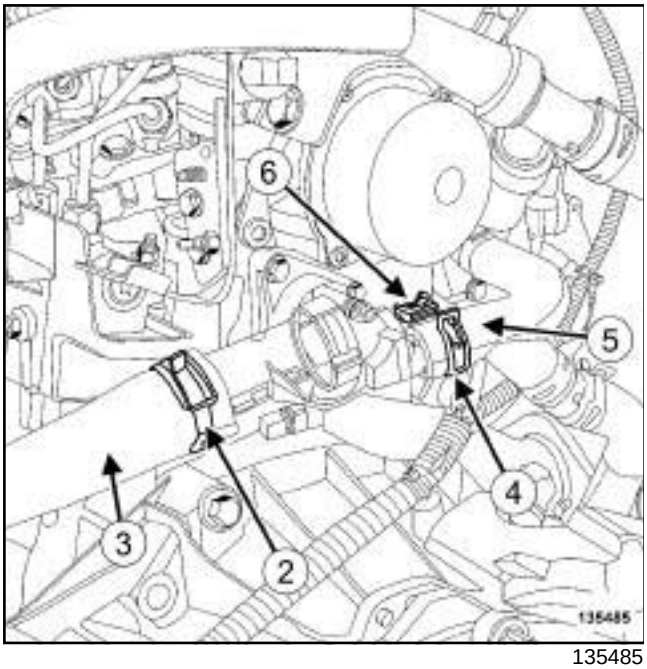

135485

- Separate the clip (**2**) of the cooling radiator top cooling hose (**3**) from the coolant outlet unit using the tool **(Mot. 1448)**.
- Disconnect the cooling radiator top cooling hose (**3**) from the coolant outlet unit using the tool **(Car. 1363)**.
- Separate the clip (**4**) of the heater matrix cooling hose (**5**) from the coolant outlet unit using the tool **(Mot. 1448)**.
- Disconnect the heater matrix cooling hose (**5**) from the coolant outlet unit using the tool **(Car. 1363)**.
- Disconnect the coolant temperature sensor connector (**6**) .

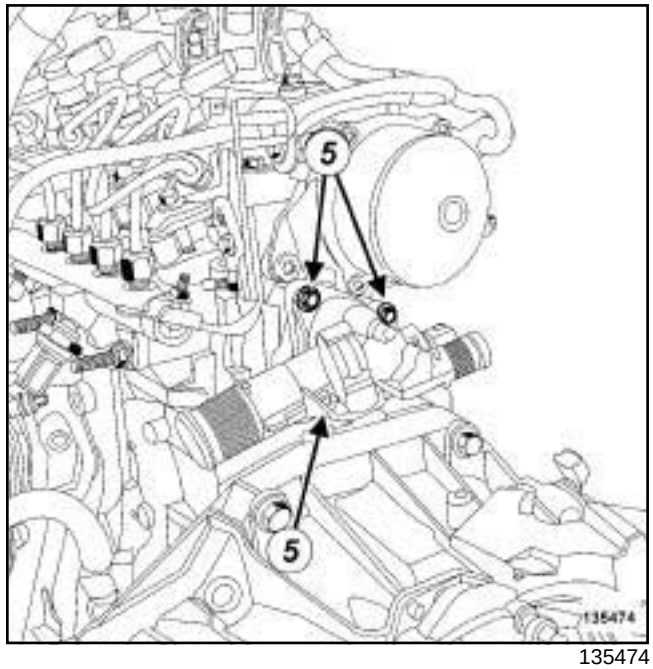

135474

- Remove:
  - the coolant outlet unit bolts (**5**) ,
  - the coolant outlet unit,
  - the coolant outlet unit seal.

REFITTING

I - REFITTING PREPARATION OPERATION

- **parts always to be replaced: Cylinder head coolant outlet unit seal (10,06,01,19)**.
- Use **SURFACE CLEANER** (see **Vehicle: Parts and ingredients for the repairwork**) (04B, Consumables - Products) to clean and degrease:
  - the cylinder head joint face,
  - the coolant outlet unit seal housing if it is to be reused.

WARNING
To ensure proper sealing, the gasket surfaces must be clean, dry and not greasy (avoid any finger marks).

WARNING
Do not scrape the joint faces of the aluminium, any damage caused to the joint face will result in a risk of leaks.

K9K

II - REFITTING OPERATION FOR PART CONCERNED

❏ Refit:

- a new coolant outlet unit seal in the coolant outlet unit housing,
- the coolant outlet unit.

❏ Torque tighten the **coolant outlet unit bolts (11 N.m)**.

❏ Connect:

- the coolant temperature sensor connector,
- the heater matrix cooling hose to the coolant outlet unit.

❏ Fit the clip on the heater matrix cooling hose onto the coolant outlet unit using the tool **(Mot. 1448)**.

❏ Connect the cooling radiator top cooling hose to the coolant outlet unit.

❏ Fit the clip of the cooling radiator top cooling hose on the coolant outlet unit using the tool **(Mot. 1448)**.

❏ Clip the expansion bottle bottom cooling hose on the coolant outlet unit.

III - FINAL OPERATION

❏ Refit:

- the front bumper (see **Front bumper: Removal - Refitting**) (55A, Exterior protection),
- the engine undertray,
- the front section of the front wheel arch liners (see **Front wheel arch liner: Removal - Refitting**) (55A, Exterior protection),
- the front wheels (see **Wheel: Removal - Refitting**) (35A, Wheels and tyres),
- the battery tray (see **Battery tray: Removal - Refitting**) (80A, Battery),
- the battery (see **Battery : Removal - Refitting**) (80A, Battery),
- the engine cover,

❏ Fill and bleed the cooling system (see **19A**, **Cooling**, **Cooling circuit: Draining - Refilling**, page **19A-17**) .

F9Q

Essential special tooling	
Mot. 1448	Long nose pliers for hose clips.

Tightening torques ▽	
coolant outlet unit bolts	**10 N.m**

REMOVAL

I - REMOVAL PREPARATION OPERATION

❑ Position the vehicle on a two-post lift (see **Vehicle: Towing and lifting**) (02A, Lifting equipment).

❑ Remove:

- the engine undertray bolts,
- the engine undertray.

❑ Drain the cooling system (see **19A**, **Cooling**, **Cooling circuit: Draining - Refilling**, page **19A-17**) .

❑ Remove:

- the engine cover,
- the windscreen wiper arms (see **Windscreen wiper arm: Removal - Refitting**) (85A, Wiping - Washing),
- the scuttle panel grille (see **Scuttle panel grille: Removal - Refitting**) (56A, Exterior equipment),
- the scoop under the scuttle panel grille (see **Scoop under scuttle panel grille: Removal - Refitting**) (56A, Exterior equipment),
- the battery (see **Battery: Removal - Refitting**) (80A, Battery),
- the battery tray (see **Battery tray: Removal - Refitting**) (80A, Battery),
- the intercooler air inlet pipe (see **12B**, **Turbocharging**, **Intercooler air inlet pipe: Removal - Refitting**, page **12B-41**) .

II - OPERATION FOR REMOVAL OF PART CONCERNED

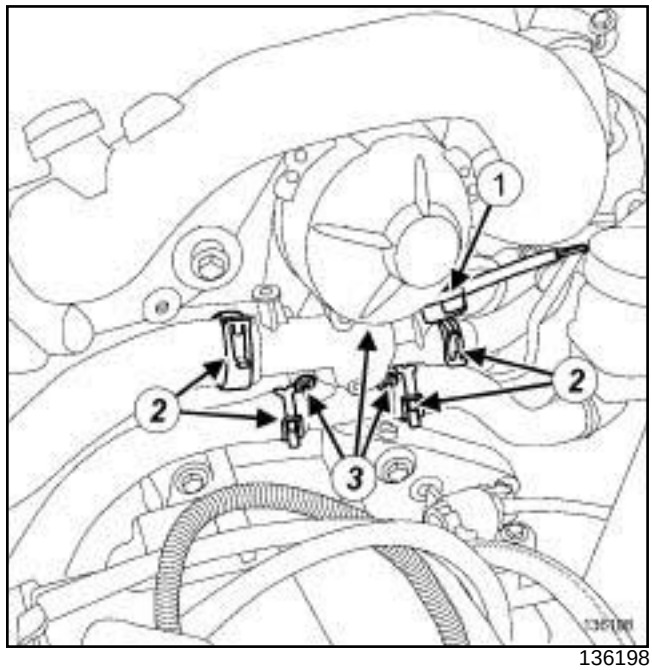

136198

❑ Disconnect the coolant temperature sensor connector (**1**) .

❑ Separate the coolant outlet unit clips (**2**) using the tool **(Mot. 1448)**.

❑ Disconnect the coolant outlet unit hoses.

❑ Remove:

- the coolant outlet unit bolts (**3**) ,
- the coolant outlet unit,
- the coolant outlet unit seal.

REFITTING

I - REFITTING PREPARATION OPERATION

❑ **parts always to be replaced: Cylinder head coolant outlet unit seal (10,06,01,19)**.

❑ Use **SURFACE CLEANER** (see **Vehicle: Parts and ingredients for the repairwork**) (04B, Consumables - Products) to clean and degrease:

- the coolant outlet unit gasket face if needed to be reused,
- the cylinder head joint face.

WARNING
To ensure proper sealing, the gasket surfaces must be clean, dry and not greasy (avoid any finger marks).

F9Q

II - REFITTING OPERATION FOR PART CONCERNED

❏ Refit:

- a new coolant outlet unit seal,
- the coolant outlet unit.

❏ Torque tighten the **coolant outlet unit bolts (10 N.m)**.

❏ Connect the coolant outlet unit hoses.

❏ Position the hose clips on the coolant outlet unit using the tool **(Mot. 1448)**.

❏ Connect the coolant temperature sensor connector.

III - FINAL OPERATION

❏ Refit:

- the intercooler air inlet pipe (see **12B**, **Turbocharging**, **Intercooler air inlet pipe: Removal - Refitting**, page **12B-41**) ,
- the battery tray (see **Battery tray: Removal - Refitting**) (80A, Battery),
- the battery (see **Battery : Removal - Refitting**) (80A, Battery),
- the scoop under the scuttle panel grille (see **Scoop under scuttle panel grille: Removal - Refitting**) (56A, Exterior equipment),
- the scuttle panel grille (see **Scuttle panel grille: Removal - Refitting**) (56A, Exterior equipment),
- the windscreen wiper arms (see **Windscreen wiper arm: Removal - Refitting**) (85A, Wiping - Washing),
- the engine cover,
- the engine undertray.

❏ Fill and bleed the cooling system (see **19A**, **Cooling**, **Cooling circuit: Draining - Refilling**, page **19A-17**) .

F4R

Essential special tooling	
Mot. 1448	Long nose pliers for hose clips.

IMPORTANT

When working in the engine compartment, take care as the radiator fan(s) may start up unexpectedly (risk of being cut).

To avoid any risk of serious burns when the engine is hot:

- do not open the expansion bottle cap,
- do not drain the cooling system,
- do not open the bleed screw(s).

WARNING

When carrying out a repair that requires a complete change, it is essential to flush the circuit with clean water, blast compressed air through the circuit to drive out the water, fill and bleed the circuit and then measure the effective protection.

The criteria to be met are:

- protection down to **-25°C ± 2** for cold and temperate countries,
- protection down to **-40°C ± 2** for "extreme cold" countries.

WARNING

Before the operation, protect the electrical accessories to prevent any risk of short circuiting and protect the belts to avoid damaging them.

REMOVAL

I - REMOVAL PREPARATION OPERATION

❏ Position the vehicle on a two-post lift (see **Vehicle: Towing and lifting**) (02A, Lifting equipment).

❏ Remove:

- the engine cover,
- the battery (see **Battery: Removal - Refitting**) (80A, Battery),
- the battery tray (see **Battery: Removal - Refitting**) (80A, Battery),
- the front wheels (see **Wheel: Removal - Refitting**) (35A, Wheels and tyres),
- the front section of the front wheel arch liners (see **Front wheel arch liner: Removal - Refitting**) (55A, Exterior protection),
- the engine undertray bolts,
- the engine undertray,
- the front bumper (see **Front bumper: Removal - Refitting**) (55A, Exterior protection).

❏ Drain the cooling system (see **19A**, **Cooling**, **Cooling circuit: Draining - Refilling**, page **19A-17**) .

F4R

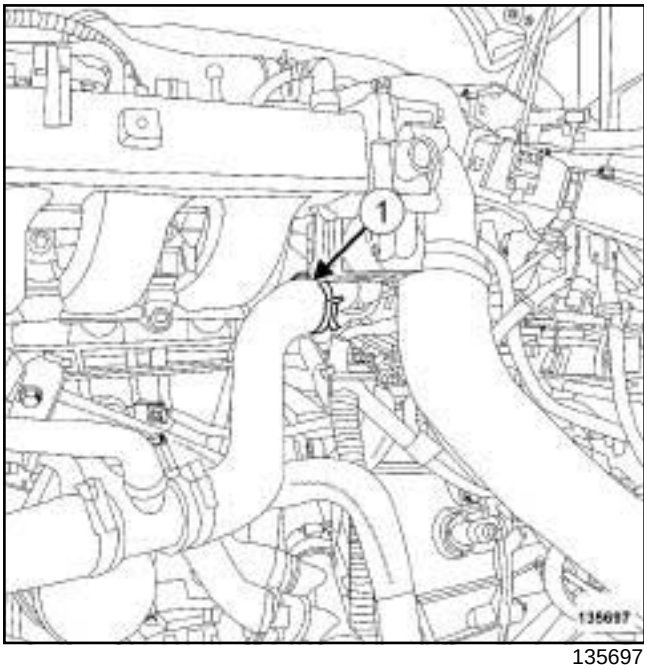

135697

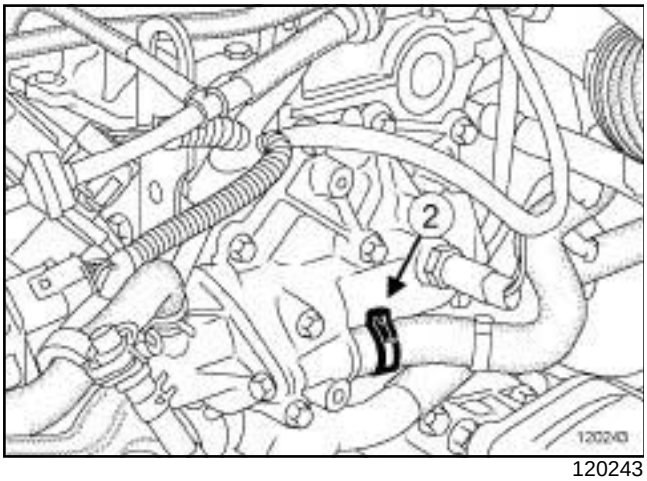

120243

❑ Remove using the **(Mot. 1448)** :

- the top hose clip (**1**) from the coolant outlet unit,
- the heater matrix hose clip (**2**) .

❑ Disconnect:

- the top hose from the coolant outlet unit,
- the heater matrix hose.

❑ Remove the coolant temperature sensor (see **19A**, **Cooling**, **Coolant temperature sensor: Removal - Refitting**, page **19A-101**) .

II - OPERATION FOR REMOVAL OF PART CONCERNED

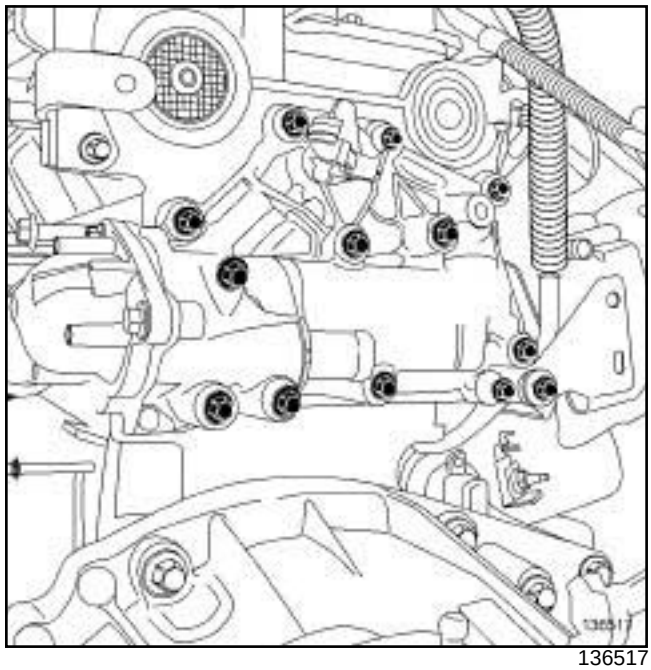

136517

❑ Remove:

- the bolts for the engine wiring harness channel,
- the coolant outlet unit bolts,
- the coolant outlet unit seal.

❑

> Note:
>
> The coolant outlet unit bolts are not the same length. Mark their position when removing them from the coolant outlet unit.

REFITTING

I - REFITTING PREPARATION OPERATION

❑ **parts always to be replaced: Cylinder head coolant outlet unit seal (10,06,01,19)**.

❑ Use **SURFACE CLEANER** (see **Vehicle: Parts and ingredients for the repairwork**) (04B, Consumables - Products) to clean and degrease:

- the cylinder head joint face,
- the coolant outlet unit housing if it is being reused.

❑

> **WARNING**
> Do not scrape the joint faces of the aluminium, any damage caused to the joint face will result in a risk of leaks.

F4R

❑

> **WARNING**
> To ensure proper sealing, the gasket surfaces must be clean, dry and not greasy (avoid any finger marks).

If replacing the coolant outlet unit

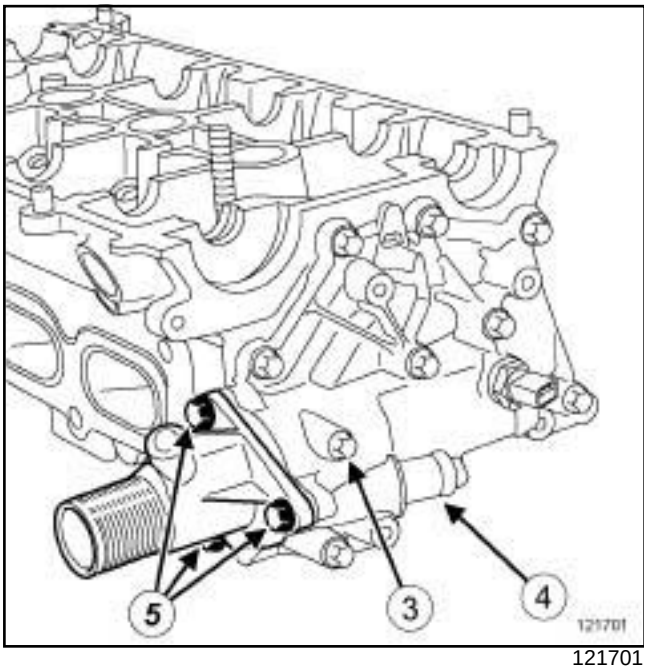

121701

❑ Remove:

- the bleed screw (**3**) ,
- the metal tube (**4**) ,
- the thermostat unit bolts (**5**) ,
- the thermostat,
- the thermostat seal.

❑ Use **SURFACE CLEANER** (see **Vehicle: Parts and ingredients for the repairwork**) (04B, Consumables - Products) to clean and degrease the joint face of the thermostat unit.

> **WARNING**
> To ensure proper sealing, the gasket surfaces must be clean, dry and not greasy (avoid any finger marks).

❑ Refit:

- the metal tube,
- the bleed screw,
- the thermostat fitted with a new seal,
- the thermostat unit,
- the thermostat unit bolts.

II - REFITTING OPERATION FOR PART CONCERNED

❑ Refit:

- a new seal on the coolant outlet unit,
- the coolant outlet unit.

III - FINAL OPERATION

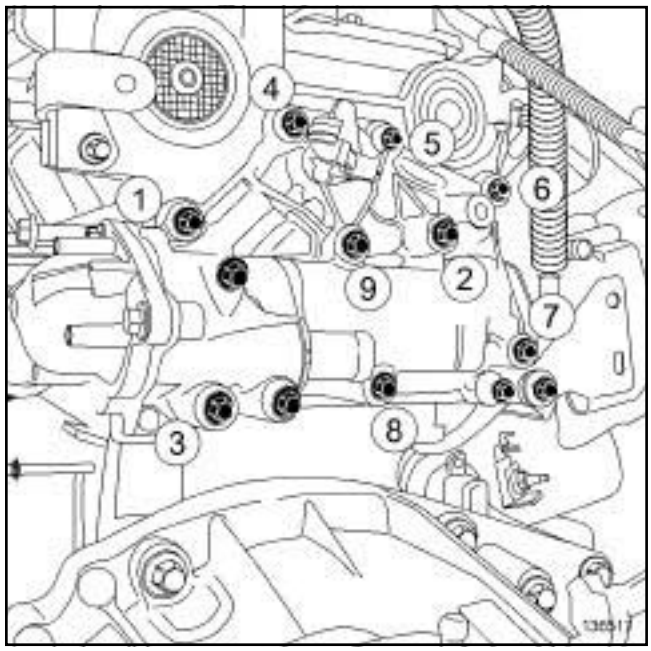

136517

❑ Tighten the following in order:

- the coolant outlet unit bolts from (**3**) to (**9**) ,
- the coolant outlet unit bolts (**1**) then (**2**) .

❑ Refit the coolant temperature sensor (see **19A**, **Cooling**, **Coolant temperature sensor: Removal - Refitting**, page **19A-101**) .

❑ Connect:

- the top hose on the coolant outlet unit,
- the heater matrix hose.

❑ Using the **(Mot. 1448)**, fit:

- the heater matrix hose clip,
- the top hose clip of the coolant outlet unit.

❑ Fill and bleed the cooling system (see **19A**, **Cooling**, **Cooling circuit: Draining - Refilling**, page **19A-17**) .

❑ Refit:

- the front bumper (see **Front bumper: Removal - Refitting**) (55A, Exterior protection).

F4R

- the engine undertray,
- the front section of the front wheel arch liners (see **Front wheel arch liner: Removal - Refitting**) (55A, Exterior protection),
- the front wheels (see **Wheel: Removal - Refitting**) (35A, Wheels and tyres),
- the battery tray (see **Battery : Removal - Refitting**) (80A, Battery),
- the battery (see **Battery : Removal - Refitting**) (80A, Battery),
- the engine cover.

K4M

IMPORTANT

When working in the engine compartment, take care as the radiator fan(s) may start up unexpectedly (risk of being cut).

To avoid any risk of serious burns when the engine is hot:

- do not open the expansion bottle cap,
- do not drain the cooling system,
- do not open the bleed screw(s).

REMOVAL

I - REMOVAL PREPARATION OPERATION

❑ Position the vehicle on a two-post lift (see **Vehicle: Towing and lifting**) (02A, Lifting equipment).

❑ Disconnect the battery (see **Battery: Removal - Refitting**) (80A, Battery).

❑ Remove:

- the engine undertray bolts,
- the engine undertray.

II - OPERATION FOR REMOVAL OF PART CONCERNED

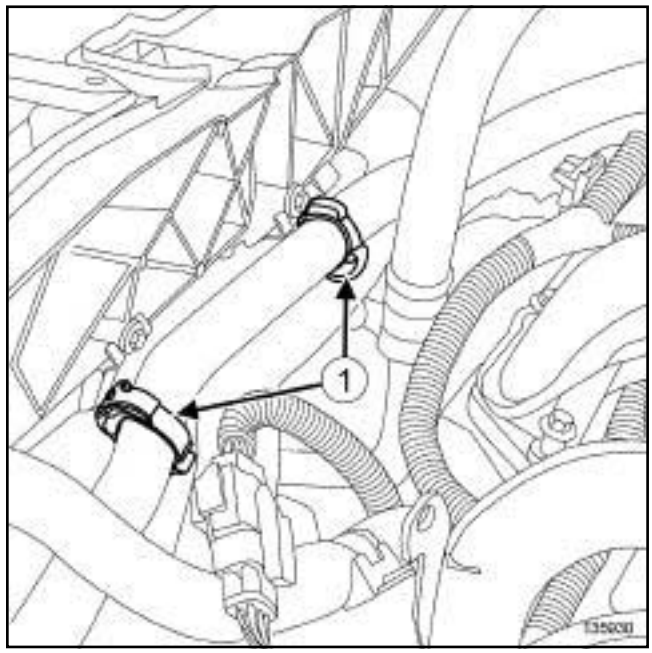

135930

❑ Unclip the cooling hoses from the engine cooling fan assembly at (**1**) .

❑ Move the cooling hoses away from the engine cooling fan assembly.

K4M

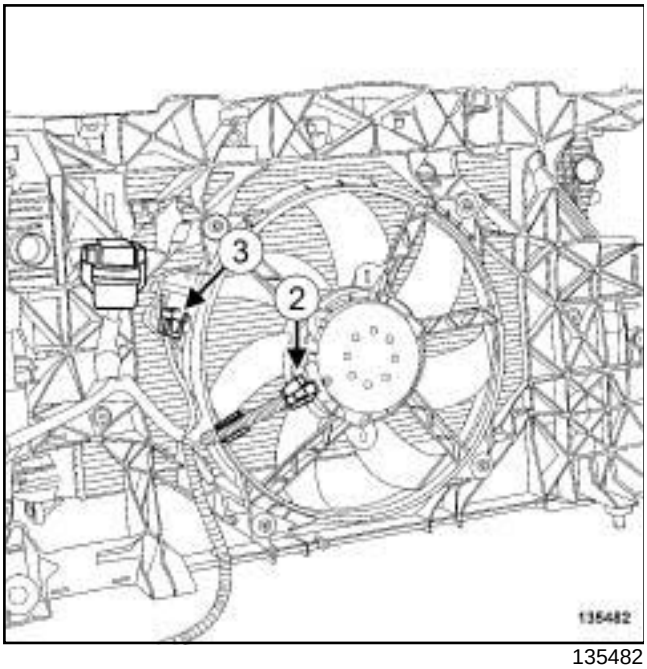

135482

❑ Disconnect:

- the engine cooling fan assembly connector (**2**) ,
- the engine cooling fan assembly resistor connector (**3**) .

❑ Unclip the engine cooling fan assembly wiring.

❑ Move aside the engine cooling fan assembly wiring.

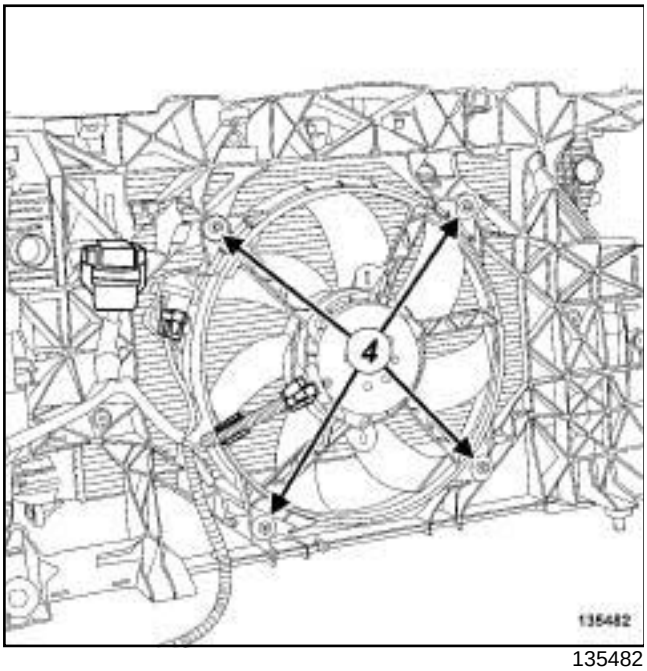

135482

❑ Remove the bolts (**4**) from the engine cooling fan assembly.

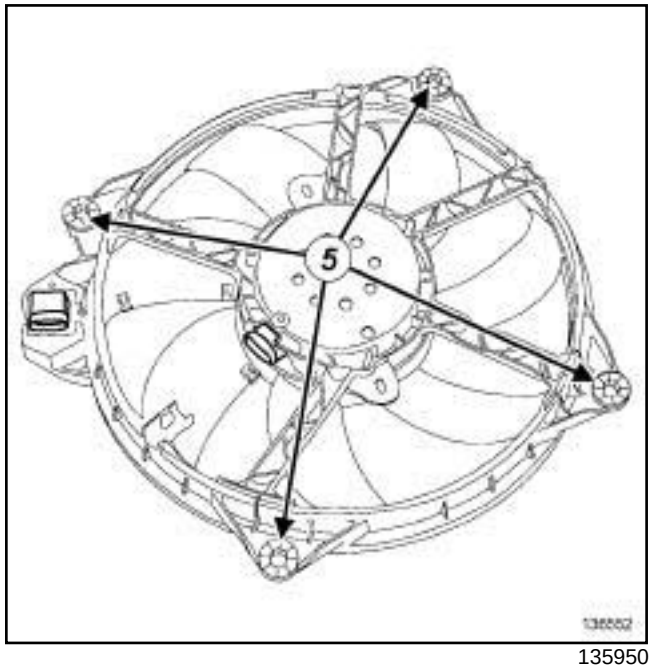

135950

❑ Unclip the engine cooling fan assembly at (**5**) .

❑ Remove the engine cooling fan assembly from underneath the vehicle.

REFITTING

I - REFITTING OPERATION FOR PART CONCERNED

❑ Refit the engine cooling fan assembly.

❑ Clip the engine cooling fan assembly in place.

❑ Refit the bolts of the engine cooling fan assembly.

❑ Fit the engine cooling fan assembly wiring.

❑ Clip the engine cooling fan assembly wiring.

❑ Connect:

- the engine cooling fan assembly connector,
- the engine cooling fan assembly resistor connector.

❑ Fit the cooling hoses on the engine cooling fan assembly.

❑ Clip the cooling hoses onto the engine cooling fan assembly.

II - FINAL OPERATION

❑ Refit the engine undertray.

❑ Connect the battery (see **Battery: Removal - Refitting**) (80A, Battery).

K9K

IMPORTANT

When working in the engine compartment, take care as the radiator fan(s) may start up unexpectedly (risk of being cut).

To avoid any risk of serious burns when the engine is hot:

- do not open the expansion bottle cap,
- do not drain the cooling system,
- do not open the bleed screw(s).

WARNING

Before the operation, protect the electrical accessories to prevent any risk of short circuiting and protect the belts to avoid damaging them.

WARNING

Prepare for the flow of fluid, and protect the surrounding components.

REMOVAL

I - REMOVAL PREPARATION OPERATION

❑ Position the vehicle on a two-post lift (see **Vehicle: Towing and lifting**) (02A, Lifting equipment).

❑ Disconnect the battery (see **Battery: Removal - Refitting**) (80A, Battery).

❑ Remove:

- the engine cover,
- the front wheels (see **Wheel: Removal - Refitting**) (35A, Wheels and tyres),
- the front section of the front wheel arch liners (see **Front wheel arch liner: Removal - Refitting**) (55A, Exterior protection),
- the engine undertray bolts,
- the engine undertray,
- the front bumper (see **Front bumper: Removal - Refitting**) (55A, Exterior protection),
- the turbocharger air outlet pipe (see **12B**, **Turbocharging**, **Intercooler air inlet pipe: Removal - Refitting**, page **12B-41**) ,
- the headlights (see **Front headlight: Removal - Refitting**) (80B, Headlights),
- the front bumper supports (see **Front bumper support: Removal - Refitting**) (42A, Front upper structure),
- the top air deflector of the cooling radiator,
- the side air deflectors of the cooling radiator,
- the front impact cross member (see **Front impact cross member: Removal - Refitting**) (41A, Front lower structure).

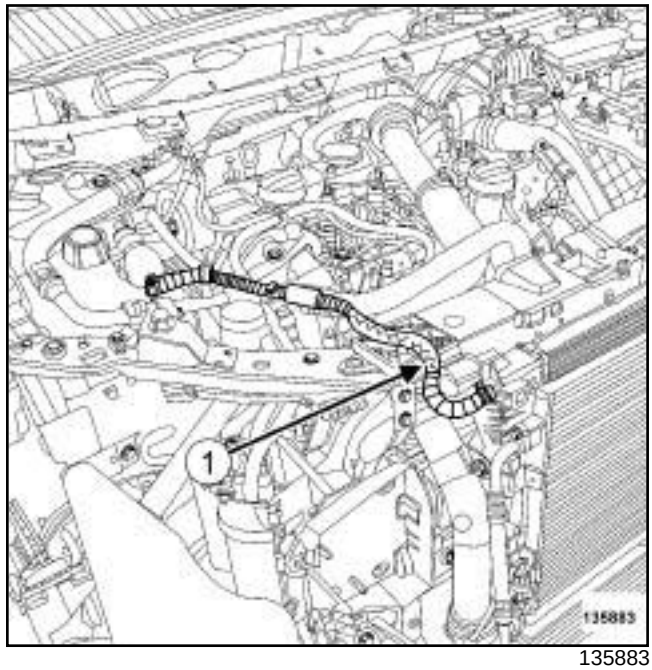

135883

❑ Unclip the expansion bottle top cooling hose (**1**) from the front end panel.

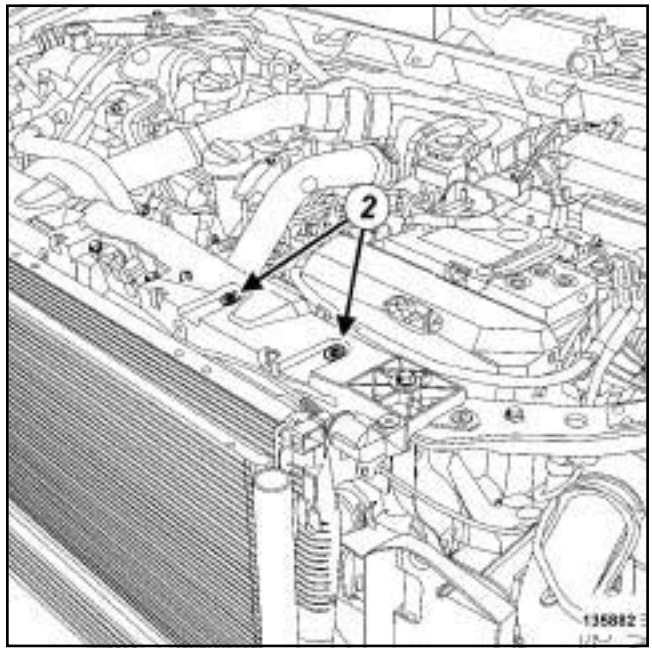

135882

❑ Remove the bolts (**2**) of the engine cooling fan assembly wiring channel from the front end panel.

K9K

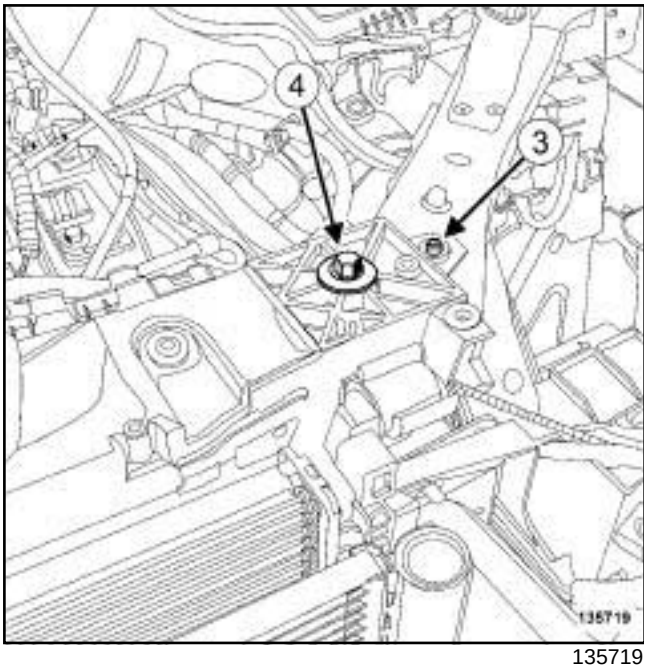

135719

❑ Remove from the front end panel:

- the clips (**3**) ,
- the upper bolts (**4**) .

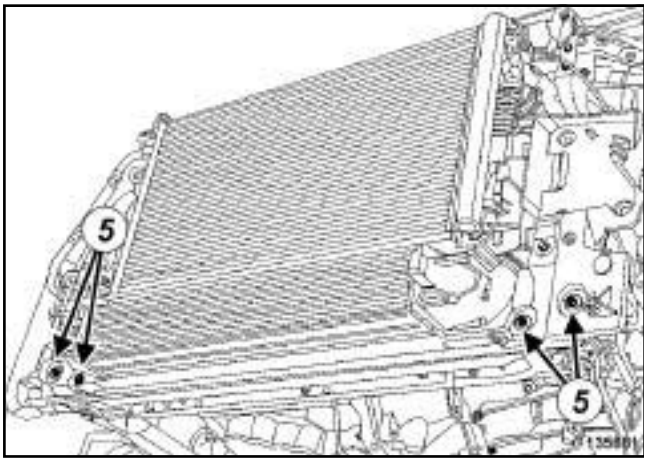

135881

❑ Remove the lower bolts (**5**) from the front end panel.

❑ Tilt the front end panel slightly towards the front of the vehicle.

II - OPERATION FOR REMOVAL OF PART CONCERNED

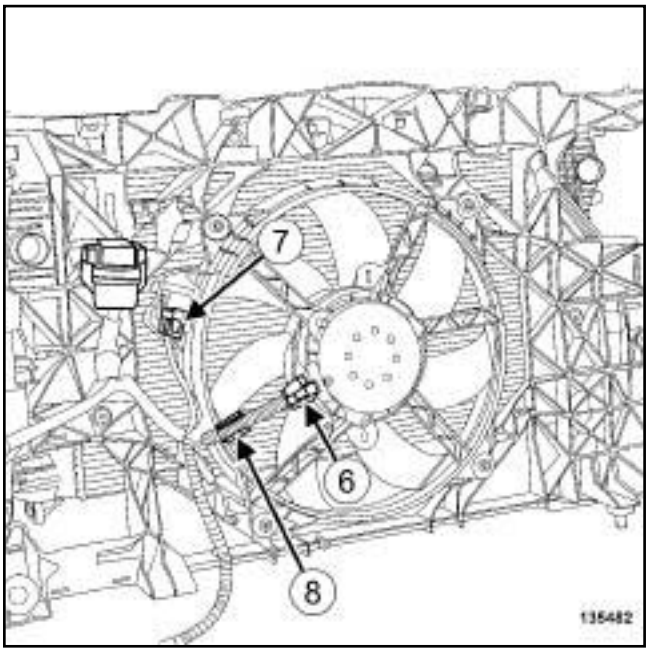

135482

❑ Disconnect:

- the fan assembly connector (**6**) ,
- the fan assembly resistor connector (**7**) .

❑ Unclip the fan assembly wiring from the fan assembly (**8**) .

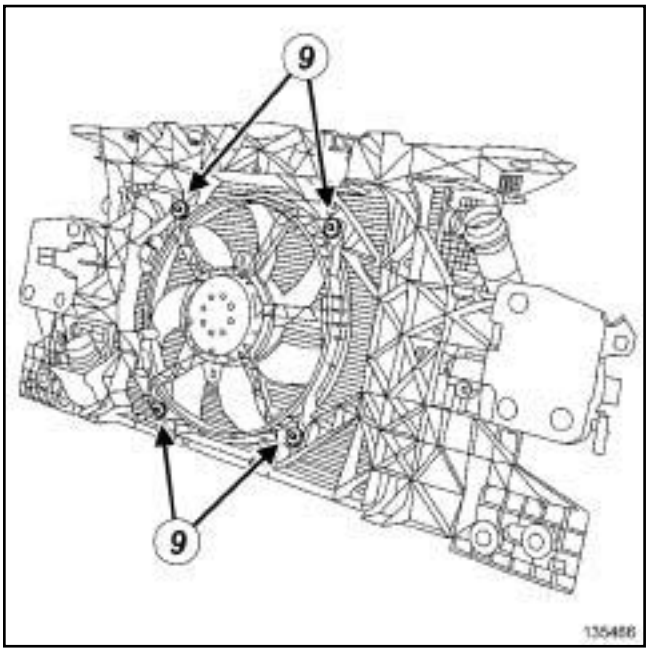

135466

❑ Remove:

- the bolts (**9**) from the fan assembly,
- the fan assembly.

K9K

REFITTING

I - REFITTING OPERATION FOR PART CONCERNED

❏ Refit the fan assembly on the front end panel.

❏ Clip the fan assembly wiring onto the fan assembly.

❏ Connect the following connectors:

- the fan assembly,
- the fan assembly resistor.

II - FINAL OPERATION

❏ Fit the front end panel.

❏ Refit:

- the lower bolts from the front end panel,
- the front end panel upper bolts,
- the front end panel clips.
- the bolts of the engine cooling fan assembly wiring channel on the front end panel.

❏ Clip the expansion bottle top cooling hose onto the front end panel.

❏ Refit:

- the front impact cross member (see **Front impact cross member: Removal - Refitting**) (41A, Front lower structure),
- the side air deflectors on the radiator,
- the top air deflector,
- the front right-hand bumper mountings (see **Front bumper support: Removal - Refitting**) (42A, Front upper structure).
- the headlights (see **Front headlight: Removal - Refitting**) (80B, Headlights),
- the turbocharger air outlet pipe (see **12B**, **Turbocharging**, **Intercooler air inlet pipe: Removal - Refitting**, page **12B-41**) ,
- the front bumper (see **Front bumper: Removal - Refitting**) (55A, Exterior protection),
- the engine undertray,
- the front section of the front wheel arch liners (see **Front wheel arch liner: Removal - Refitting**) (55A, Exterior protection),
- the front wheels (see **Wheel: Removal - Refitting**) (35A, Wheels and tyres),
- the engine cover.

❏ Connect the battery (see **Battery : Removal - Refitting**) (80A, Battery).

F9Q

REMOVAL

I - REMOVAL PREPARATION OPERATION

❑ Position the vehicle on a two-post lift (see **Vehicle: Towing and lifting**) (02A, Lifting equipment).

❑ Disconnect the battery (see **Battery: Removal - Refitting**) (80A, Battery).

❑ Remove:

- the engine cover,
- the engine undertray bolts,
- the engine undertray,
- the front wheels (see **Wheel: Removal - Refitting**) (35A, Wheels and tyres),
- the front section of the front wheel arch liners (see **Front wheel arch liner: Removal - Refitting**) (55A, Exterior protection),
- the front bumper (see **Front bumper: Removal - Refitting**) (55A, Exterior protection),
- the headlights (see **Front headlight: Removal - Refitting**) (80B, Headlights),
- the front bumper supports (see **Front bumper support: Removal - Refitting**) (42A, Front upper structure).
- the front impact cross member (see **Front impact cross member: Removal - Refitting**) (41A, Front lower structure),

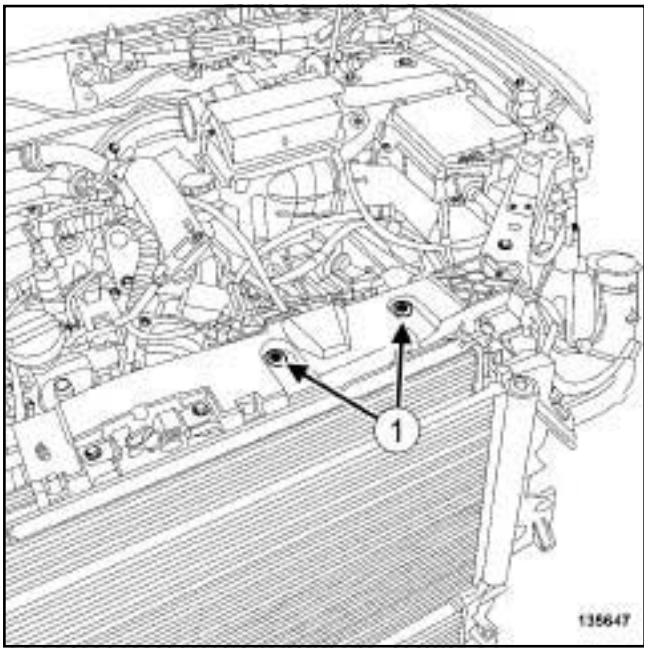

135647

❑ Remove:

- the bolts (**1**) of the engine wiring channel,
- the bonnet catch (see **Bonnet latch: Removal - Refitting**) (52A, Non-side opening element mechanisms).

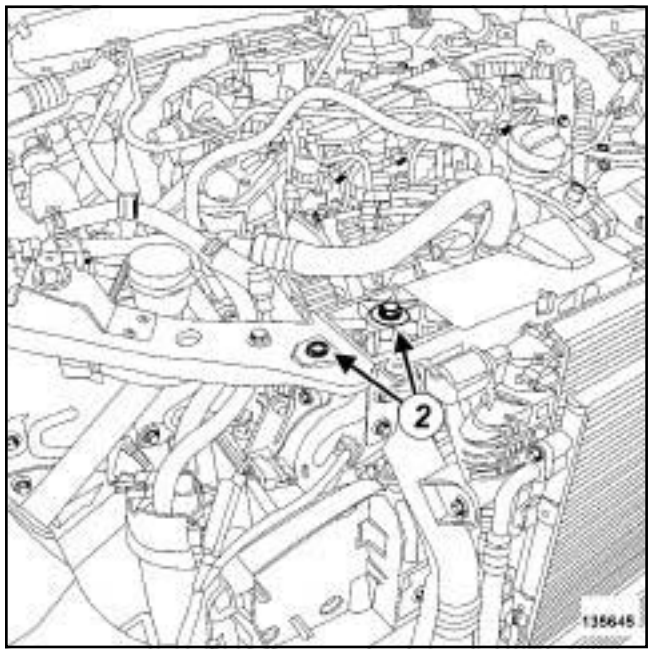

135645

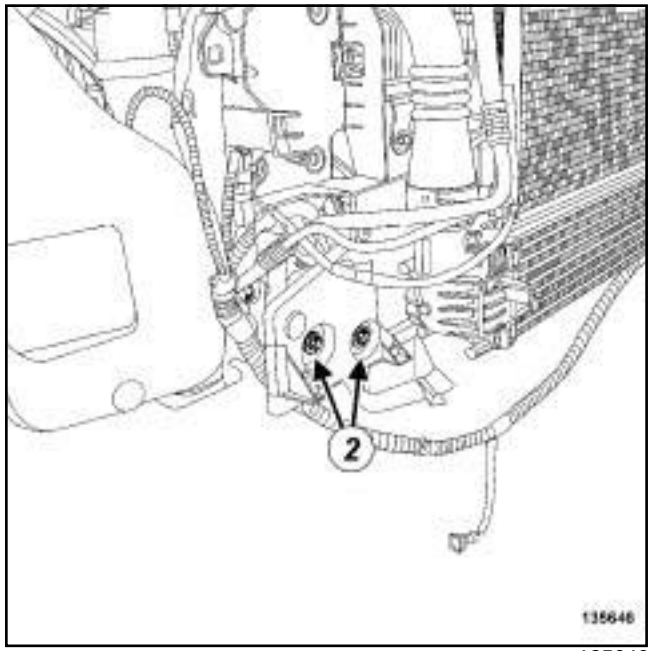

135646

❑ Remove the front end panel bolts (**2**) .

❑ Tilt the front end panel.

❑ Remove the intercooler outlet air outlet pipe (see **12B**, **Turbocharging**, **Intercooler air outlet pipe: Removal - Refitting**, page **12B-56**) .

F9Q

II - OPERATION FOR REMOVAL OF PART CONCERNED

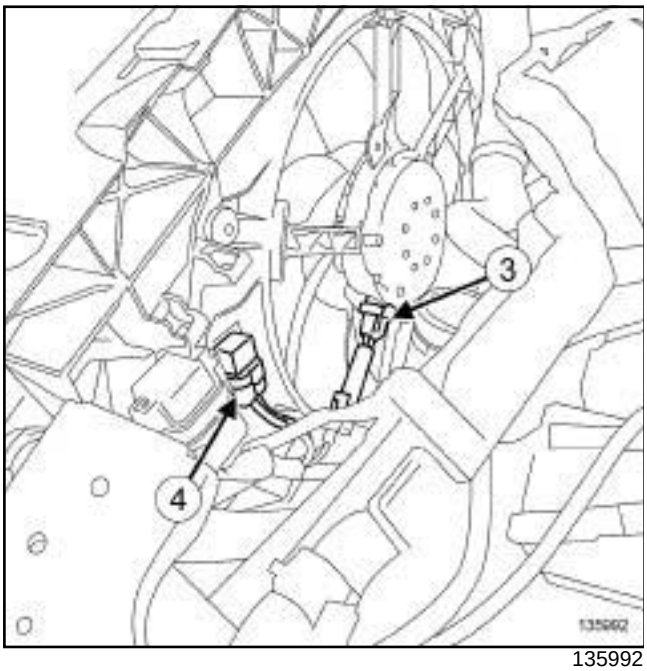

135992

❑ Disconnect:

- the fan assembly connector (**3**) ,
- the fan assembly resistor connector (**4**) .

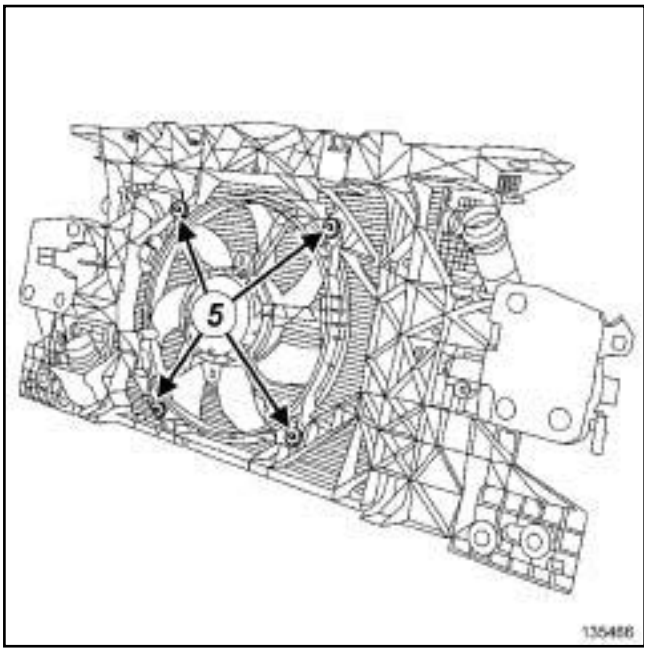

135466

❑ Remove:

- the bolts (**5**) from the fan assembly,
- the fan assembly.

REFITTING

I - REFITTING OPERATION FOR PART CONCERNED

❑ Refit the fan assembly.

❑ Connect:

- the fan assembly resistor connector,
- the motor-driven fan assembly connector.

II - FINAL OPERATION

❑ Refit:

- a new intercooler air outlet pipe (see **12B**, **Turbocharging**, **Intercooler air outlet pipe: Removal - Refitting**, page **12B-56**) ,
- the front end panel,
- the bonnet catch (see **Bonnet latch: Removal - Refitting**) (52A, Non-side opening element mechanisms),
- the bolts of the engine wiring channel.
- the front impact cross member (see **Front impact cross member: Removal - Refitting**) (41A, Front upper structure),
- the front bumper mountings (see **Front bumper support: Removal - Refitting**) (42A, Front upper structure),
- the headlights (see **Front headlight: Removal - Refitting**) (80B, Headlights),
- the front bumper (see **Front bumper: Removal - Refitting**) (55A, Exterior protection),
- the front section of the front wheel arch liners (see **Front wheel arch liner: Removal - Refitting**) (55A, Exterior protection),
- the front wheels (see **Wheel: Removal - Refitting**) (35A, Wheels and tyres),
- the engine undertray,
- the engine cover.

❑ Connect the battery (see **Battery: Removal - Refitting**) (80A, Battery).

F4R

❑

IMPORTANT

When working in the engine compartment, take care as the radiator fan(s) may start up unexpectedly (risk of being cut).

To avoid any risk of serious burns when the engine is hot:

- do not open the expansion bottle cap,
- do not drain the cooling system,
- do not open the bleed screw(s).

REMOVAL

I - REMOVAL PREPARATION OPERATION

❑ Position the vehicle on a two-post lift (see **Vehicle: Towing and lifting**) (02A, Lifting equipment).

❑ Disconnect the battery (see **Battery: Removal - Refitting**) (80A, Battery).

❑ Remove:

- the engine cover,
- the engine undertray bolts,
- the engine undertray,
- the front wheels (see **Wheel: Removal - Refitting**) (35A, Wheels and tyres),
- the front section of the front wheel arch liners (see **Front wheel arch liner: Removal - Refitting**) (55A, Exterior protection),
- the front bumper (see **Front bumper: Removal - Refitting**) (55A, Exterior protection),
- the upper air deflector,
- the side air deflectors,
- the accessories belt (see **11A**, **Top and front of engine**, **Accessories belt: Removal - Refitting**, page **11A-7**) ,
- the headlights (see **Front headlight: Removal - Refitting**) (80B, Headlights),
- the front bumper supports (see **Front bumper support: Removal - Refitting**) (42A, Front upper structure),
- the audible warning (see **Horn: Removal - Refitting**) (82B, Horn),
- the front impact cross member (see **Front impact cross member: Removal - Refitting**) (41A, Front lower structure),
- the bonnet catch (see **Bonnet latch: Removal - Refitting**) (52A, Non-side opening element mechanisms).

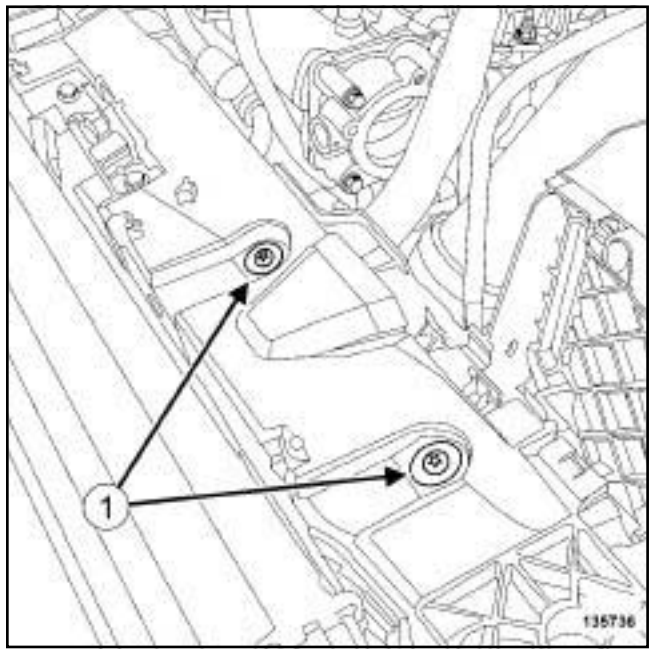

135736

❑ Remove the bolts (**1**) of the wiring channel from the engine cooling fan assembly.

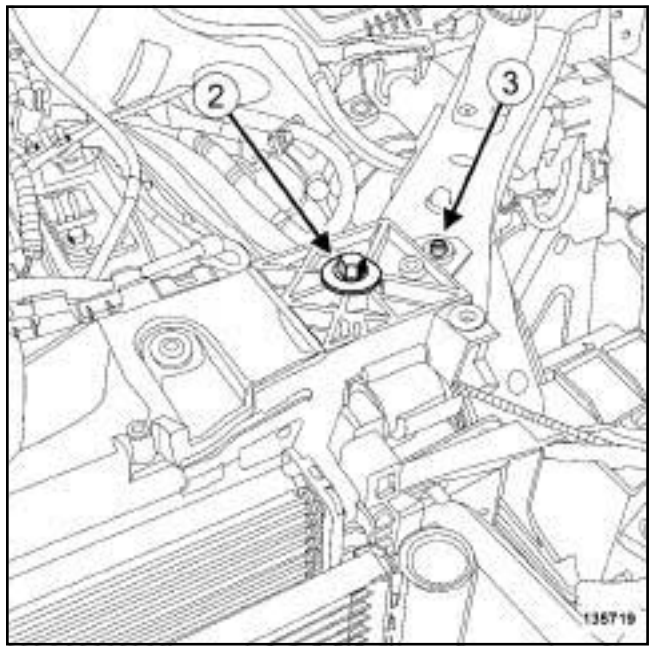

135719

❑ Remove:

- the upper bolts (**2**) from the front end panel,
- the front end panel clips (**3**) .

F4R

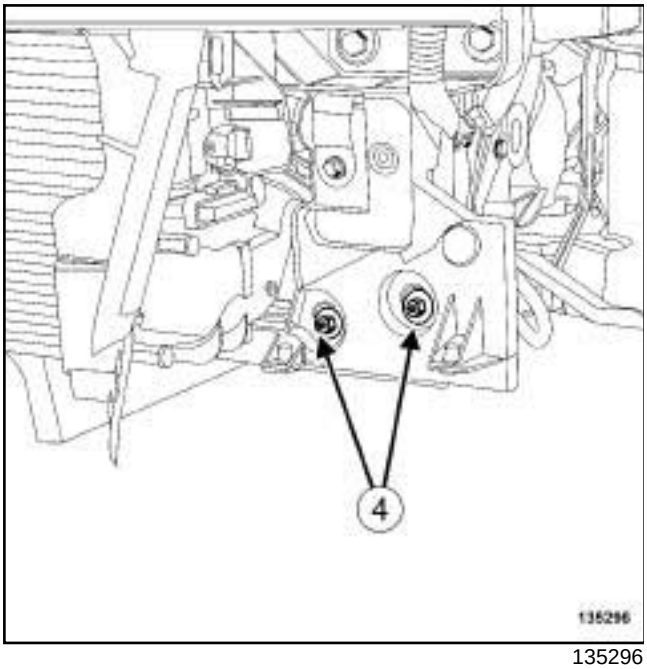

135296

❑ Remove the lower bolts (**4**) from the front end panel.

❑ Tilt the front end panel slightly towards the front of the vehicle.

❑ Remove the intercooler outlet air outlet pipe (see **12B**, **Turbocharging**, **Intercooler air outlet pipe: Removal - Refitting**, page **12B-56**) .

II - OPERATION FOR REMOVAL OF PART CONCERNED

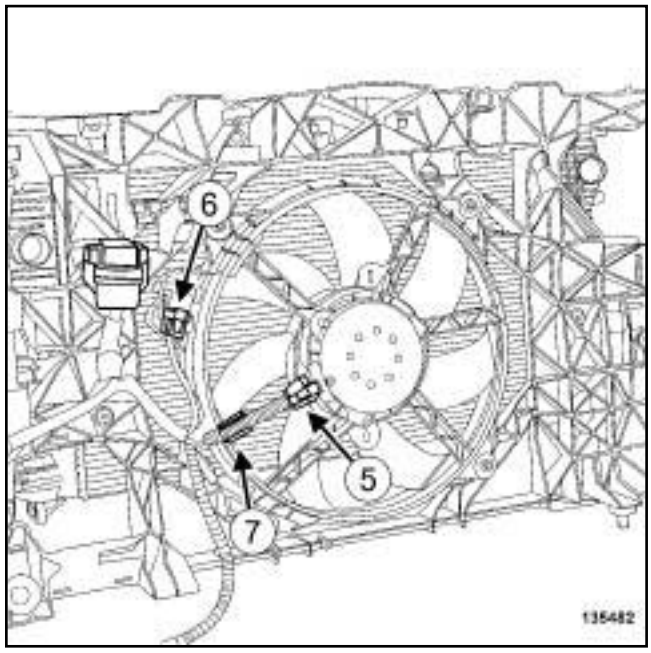

135482

❑ Disconnect:

- the fan assembly connector (**5**) ,
- the fan assembly resistor connector (**6**) .

❑ Unclip the fan assembly wiring from the fan assembly at (**7**) .

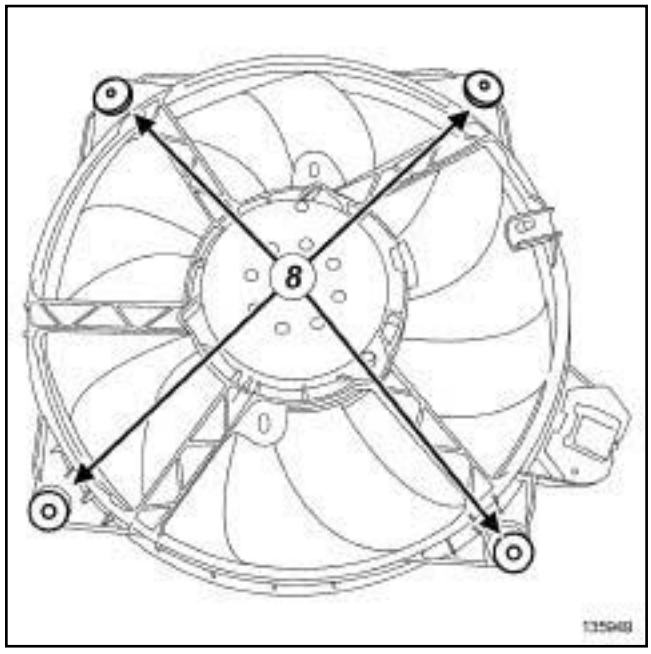

135994

❑ Remove:

- the bolts (**8**) from the fan assembly,
- the fan assembly.

F4R

REFITTING

I - REFITTING OPERATION FOR THE PART

❏ Refit the fan assembly.

❏ Clip the fan assembly wiring onto the fan assembly.

❏ Connect:

- the fan assembly resistor connector,
- the motor-driven fan assembly connector.

II - FINAL OPERATION

❏ Refit the intercooler air outlet pipe (see **12B**, **Turbocharging**, **Intercooler air outlet pipe: Removal - Refitting**, page **12B-56**) .

❏ Fit the front end panel.

❏ Refit:

- the lower bolts from the front end panel,
- the front end panel clips,
- the front end panel upper bolts,
- the bolts of the wiring channel of the engine cooling fan assembly,
- the bonnet catch (see **Bonnet latch: Removal - Refitting**) (52A, Non-side opening element mechanisms),
- the front impact cross member (see **Front impact cross member: Removal - Refitting**) (41A, Front lower structure),
- the audible warning (see **Horn: Removal - Refitting**) (82B, Horn),
- the front bumper supports (see **Front bumper support: Removal - Refitting**) (42A, Front upper structure),
- the headlights (see **Front headlight: Removal - Refitting**) (80B, Headlights),
- the accessories belt (see **11A**, **Top and front of engine**, **Accessories belt: Removal - Refitting**, page **11A-7**) ,
- the side air deflectors,
- the upper air deflector,
- the front bumper (see **Front bumper: Removal - Refitting**) (55A, Exterior protection),
- the front section of the front wheel arch liners (see **Front wheel arch liner: Removal - Refitting**) (55A, Exterior protection),
- the front wheels (see **Wheel: Removal - Refitting**) (35A, Wheels and tyres),
- the engine undertray,
- the engine cover.

❏ Connect the battery (see **Battery : Removal - Refitting**) (80A, Battery).

❏ Adjust the headlights (see **Front headlight: Adjusting**) (80B, Headlights).

K4M

Essential special tooling	
Mot. 1202-02	Pliers for small hose clips.
Mot. 1202-01	Pliers for large hose clips.
Mot. 1448	Long nose pliers for hose clips.

Tightening torques ▽	
coolant pump inlet pipe bolt	**22 N.m**
coolant pump inlet pipe bolts	**25 N.m**
bolt of the alternator strut on the alternator	**25 N.m**
alternator strut nut on the cylinder block	**25 N.m**
dipstick guide tube bolt	**10 N.m**
dipstick guide tube bolts	**10 N.m**

REMOVAL

I - REMOVAL PREPARATION OPERATION

❑ Position the vehicle on a two-post lift (see **Vehicle: Towing and lifting**) (02A, Lifting equipment).

❑ Disconnect the battery (see **Battery: Removal - Refitting**) (80A, Battery).

❑ Remove:

- the engine cover,
- the front wheels (see **Wheel: Removal - Refitting**) (35A, Wheels and tyres),
- the front section of the front wheel arch liners (see **Front wheel arch liner: Removal - Refitting**) (55A, Exterior protection),
- the engine undertray bolts,
- the engine undertray,
- the front bumper (see **Front bumper: Removal - Refitting**) (55A, Exterior protection).

❑ Drain the cooling system (see **19A**, **Cooling**, **Cooling circuit: Draining - Refilling**, page **19A-17**) .

K4M, and 848

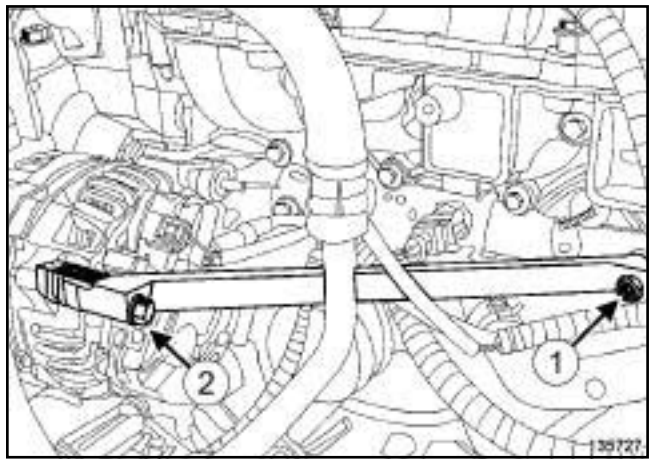

135727

❑ Remove:

- the alternator strut nut (**1**) from the cylinder block,
- the alternator strut bolt (**2**) from the alternator,
- the alternator strut,
- the washer located behind the bracket.

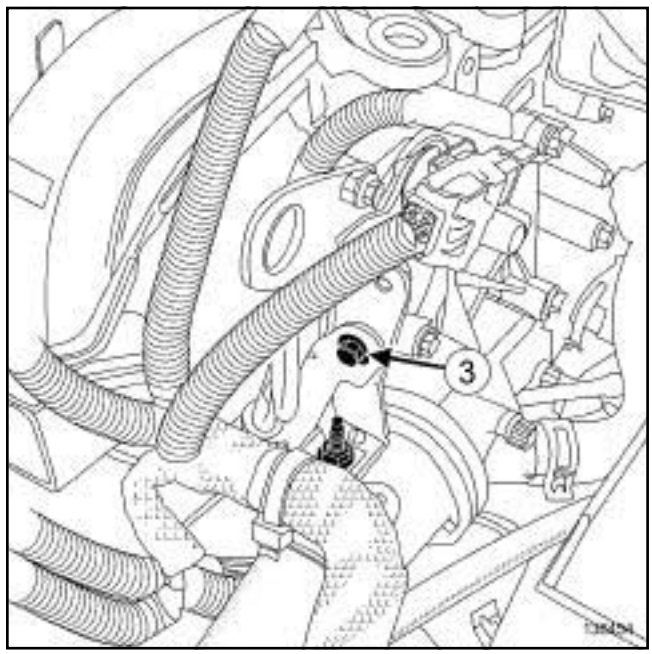

136454

❑ Remove:

- the dipstick,
- the dipstick guide bolt (**3**) from the lifting eye,
- the dipstick guide.

K4M

K4M, and 858 or 866

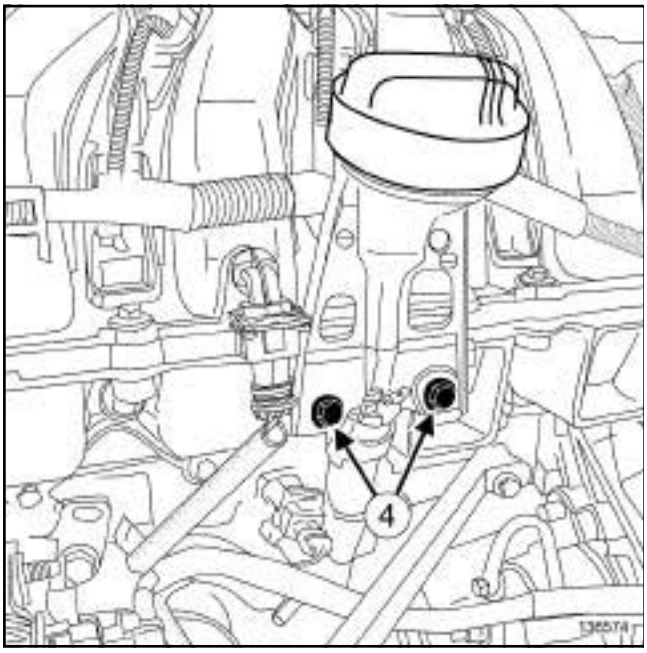

136574

❑ Remove:

- the dipstick,
- the dipstick guide bolts (**4**) from the injector holder support,
- the dipstick guide,
- the oil pressure sensor (see **10A**, **Engine and cylinder block assembly**, **Oil pressure sensor: Removal - Refitting**, page **10A-64**) .

II - OPERATION FOR REMOVAL OF PART CONCERNED

K4M, and 848

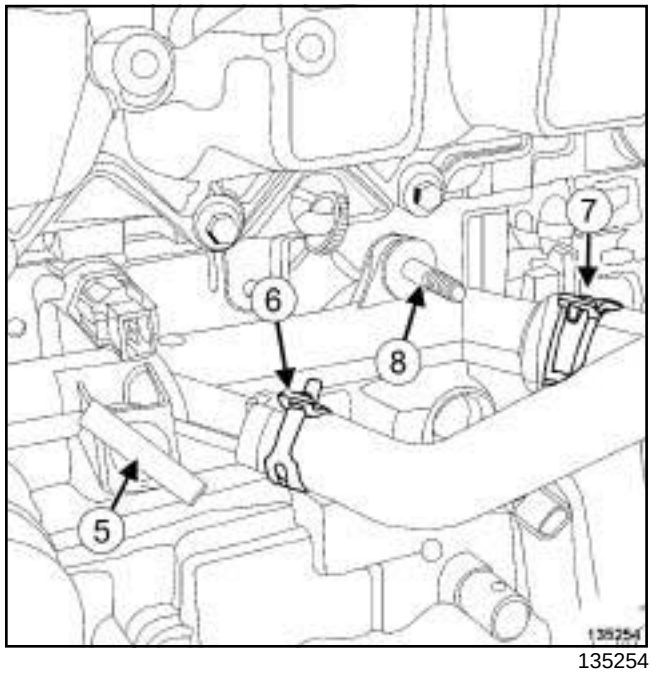

135254

❑ Unclip the alternator wiring (**5**) .

❑ Using the **(Mot. 1202-02)** or **(Mot. 1202-01)** or **(Mot. 1448)** remove:

- the heater matrix hose clip (**6**) ,
- the cooling radiator bottom hose clip (**7**) .

❑ Disconnect the following from the coolant pump inlet pipe:

- the heater matrix hose,
- the cooling radiator bottom hose.

❑ Remove:

- the bolt (**8**) from the coolant pump inlet pipe,
- the coolant pump inlet pipe.

K4M

K4M, and 858 or 866

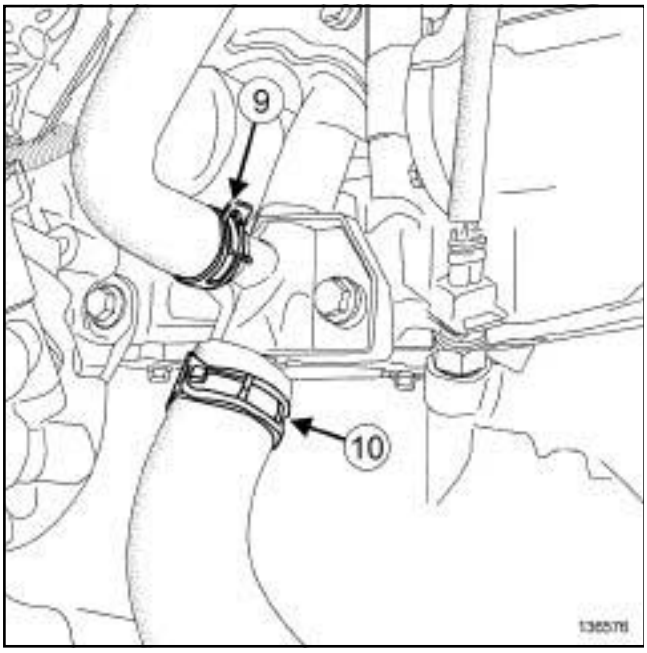

136576

- Using the **(Mot. 1202-02)** or **(Mot. 1202-01)** or **(Mot. 1448)** remove:
  - the heater matrix hose clip (**9**) ,
  - the cooling radiator bottom hose clip (**10**) .
- Disconnect the following from the coolant pump inlet pipe:
  - the heater matrix hose,
  - the cooling radiator bottom hose.

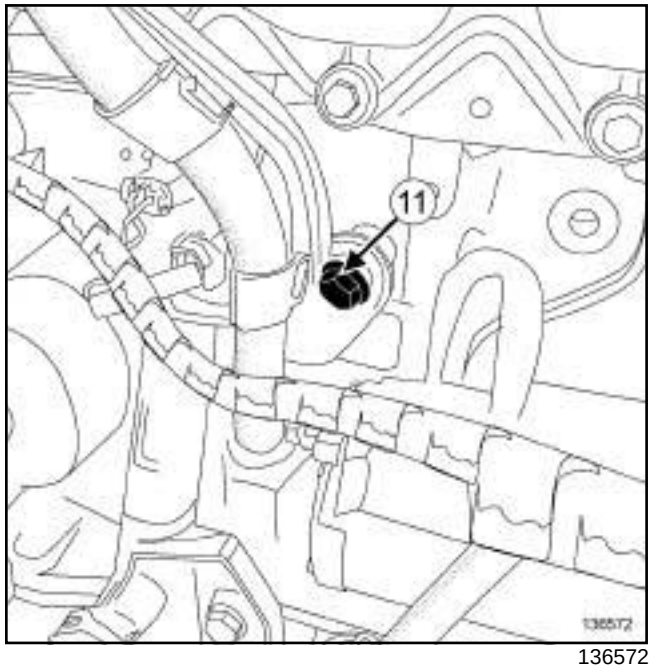

136572

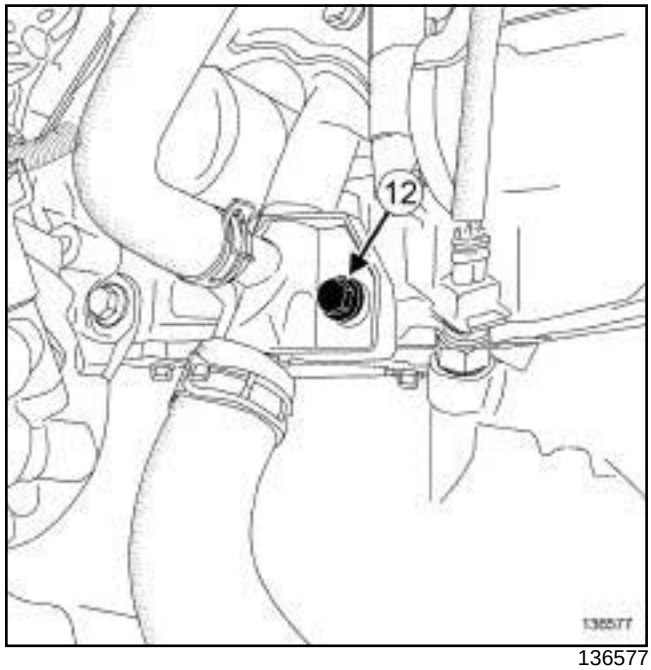

136577

- Remove:
  - the bolts (**11**) and (**12**) from the coolant pump inlet pipe,
  - the coolant pump inlet pipe.

K4M

REFITTING

I - REFITTING PREPARATION OPERATION

❑ **parts always to be replaced: seal between coolant pump inlet pipe and coolant pump (10,06,01, 22)**.

II - REFITTING OPERATION FOR PART CONCERNED

❑ Refit the coolant pump inlet pipe fitted with a new seal.

K4M, and 848

❑ Torque tighten the **coolant pump inlet pipe bolt (22 N.m)**.

K4M, and 858 or 866

❑ Torque tighten the **coolant pump inlet pipe bolts (25 N.m)**.

III - FINAL OPERATION

❑ Connect the following to the coolant pump inlet pipe:

- the heater matrix hose,
- the cooling radiator bottom hose.

❑ Using the **(Mot. 1202-02)** or **(Mot. 1202-01)** or **(Mot. 1448)** fit:

- the heater matrix hose clip,
- the cooling radiator bottom hose clip.

K4M, and 848

❑ Clip the alternator wiring.

❑ Refit:

- the washer located behind the alternator bracket,
- the alternator strut,
- the bolt mounting the strut on the alternator,
- the alternator strut nut on the cylinder block.

❑ Tighten to torque:

- the **bolt of the alternator strut on the alternator (25 N.m)**,
- the **alternator strut nut on the cylinder block (25 N.m)**.

❑ Refit the dipstick guide.

K4M, and 848

❑ Torque tighten the **dipstick guide tube bolt (10 N.m)**.

K4M, and 858 or 866

❑ Torque tighten the **dipstick guide tube bolts (10 N.m)**.

❑ Refit the oil pressure sensor (see **10A**, **Engine and cylinder block assembly**, **Oil pressure sensor: Removal - Refitting**, page **10A-64**) .

❑ Refit:

- the dipstick,
- the front bumper (see **Front bumper: Removal - Refitting**) (55A, Exterior protection),
- the engine undertray,
- the front section of the front wheel arch liners (see **Front wheel arch liner: Removal - Refitting**) (55A, Exterior protection),
- the front wheels (see **Wheel: Removal - Refitting**) (35A, Wheels and tyres),
- the engine cover.

❑ Connect the battery (see **Battery: Removal - Refitting**) (80A, Battery).

❑ Fill and bleed the cooling system (see **19A**, **Cooling**, **Cooling circuit: Draining - Refilling**, page **19A-17**) .

Water pump inlet pipe: Removal - Refitting

K9K

Essential equipment
refrigerant charging station

Tightening torques ▽	
coolant pump inlet pipe bolt	**25 N.m**

IMPORTANT
Wear leaktight gloves (Nitrile type) for this operation.

IMPORTANT
Wear heat protective gloves during the operation.

IMPORTANT
The circuits are designed to be pressurised, so be careful at high temperatures (risk of serious burns).

Do not remove the cap from the expansion bottle while the engine is hot.

Take care when carrying out a repair under the bonnet, as the radiator fan(s) may start to operate without warning.

Do not open the bleed screw(s) with the engine running.

WARNING
Prepare for the flow of fluid, and protect the surrounding components.

REMOVAL

I - REMOVAL PREPARATION OPERATION

❑ Position the vehicle on a two-post lift (see **Vehicle: Towing and lifting**) (02A, Lifting equipment).

❑ Remove:

- the engine cover,
- the front wheels (see **Wheel: Removal - Refitting**) (35A, Wheels and tyres),
- the front section of the front wheel arch liners (see **Front wheel arch liner: Removal - Refitting**) (55A, Exterior protection),
- the engine undertray bolts,
- the engine undertray,
- the front bumper (see **Front bumper: Removal - Refitting**) (55A, Exterior protection).

❑ Drain:

- the cooling system (see **19A**, **Cooling**, **Cooling circuit: Draining - Refilling**, page **19A-17**) ,
- the refrigerant circuit using a **refrigerant charging station** (see **Coolant circuit Draining - Refilling**) (62A, Air conditioning).

❑ Remove the oil-water heat exchanger (see **10A**, **Engine and cylinder block assembly**, **Exchanger: Removal - Refitting**, page **10A-55**) .

II - OPERATION FOR REMOVAL OF PART CONCERNED

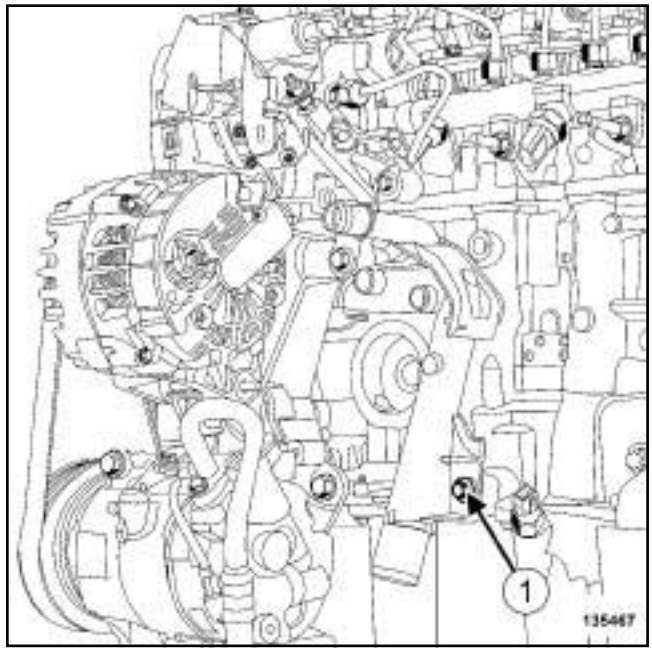

135467

❑ Remove:

- the bolt (**1**) from the coolant pump inlet pipe,
- the coolant pump inlet pipe,
- the coolant pump inlet pipe seal.

K9K

REFITTING

I - REFITTING PREPARATION OPERATION

- **parts always to be replaced: seal between coolant pump inlet pipe and coolant pump (10,06,01, 22)**.
- **parts always to be replaced: refrigerant pipe seal (30,02,02,52)**
- Use **SURFACE CLEANER** (see **Vehicle: Parts and ingredients for the repairwork**) (04B, Consumables - Products) to clean and degrease:
  - the housing of the seal on the coolant pump inlet pipe if it is to be reused,
  - the seal housing in the cylinder block.

II - REFITTING OPERATION FOR PART CONCERNED

- Refit the coolant pump inlet pipe fitted with a new seal.
- Torque tighten the **coolant pump inlet pipe bolt (25 N.m)**.

III - FINAL OPERATION

- Refit:
  - the coolant-oil heat exchanger (see **10A**, **Engine and cylinder block assembly**, **Exchanger: Removal - Refitting**, page **10A-55**) ,
  - the front bumper (see **Front bumper: Removal - Refitting**) (55A, Exterior protection),
  - the engine undertray,
  - the front section of the front wheel arch liners (see **Front wheel arch liner: Removal - Refitting**) (55A, Exterior protection),
  - the front wheels (see **Wheel: Removal - Refitting**) (35A, Wheels and tyres),
  - the engine cover.
- Fill and bleed the cooling system (see **19A**, **Cooling**, **Cooling circuit: Draining - Refilling**, page **19A-17**) .

  Perform the following operations:
  - fill and bleed the cooling circuit (see **19A**, **Cooling**, **Cooling circuit: Draining - Refilling**, page **19A-17**) ,
  - fill the refrigerant circuit (see **Coolant circuit Draining - Refilling**) (62A, Air conditioning).

F4R

Essential special tooling	
Mot. 1448	Long nose pliers for hose clips.

Essential equipment
refrigerant charging station

Tightening torques ▽	
coolant pump inlet pipe offset bolts on the cylinder block	**10 N.m**
coolant pump inlet pipe bolt on the cylinder block	**38 N.m**

IMPORTANT

When working in the engine compartment, take care as the radiator fan(s) may start up unexpectedly (risk of being cut).

To avoid any risk of serious burns when the engine is hot:

- do not open the expansion bottle cap,
- do not drain the cooling system,
- do not open the bleed screw(s).

REMOVAL

I - REMOVAL PREPARATION OPERATION

❑ Position the vehicle on a two-post lift (see **Vehicle: Towing and lifting**) (02A, Lifting equipment).

❑ Disconnect the battery (see **Battery: Removal - Refitting**) (80A, Battery).

❑ Remove:

- the engine cover,
- the engine undertray bolts,
- the engine undertray.

❑ Perform the following operations:

- drain the refrigerant circuit using a **refrigerant charging station** (see **Coolant circuit Draining - Refilling**) (62A, Air conditioning),
- drain the cooling system (see **19A**, **Cooling**, **Cooling circuit: Draining - Refilling**, page **19A-17**) .

❑ Remove:

- the front wheels (see **Wheel: Removal - Refitting**) (35A, Wheels and tyres),
- the front section of the front wheel arch liners (see **Front wheel arch liner: Removal - Refitting**) (55A, Exterior protection),
- the front bumper (see **Front bumper: Removal - Refitting**) (55A, Exterior protection),
- the accessories belt (see **11A**, **Top and front of engine**, **Accessories belt: Removal - Refitting**, page **11A-7**) ,
- the alternator (see **16A**, **Starting - Charging**, **Alternator: Removal - Refitting**, page **16A-1**) ,
- the air conditioning compressor (see **Compressor: Removal - Refitting**) (62A, Air conditioning),
- the multifunction support (see **10A**, **Engine and cylinder block assembly**, **Multifunction support: Removal - Refitting**, page **10A-84**) .

II - OPERATION FOR REMOVAL OF PART CONCERNED

❑ Remove the hose clip on the coolant pump inlet pipe using the tool **(Mot. 1448)**.

❑ Disconnect the hose from the coolant pump inlet pipe.

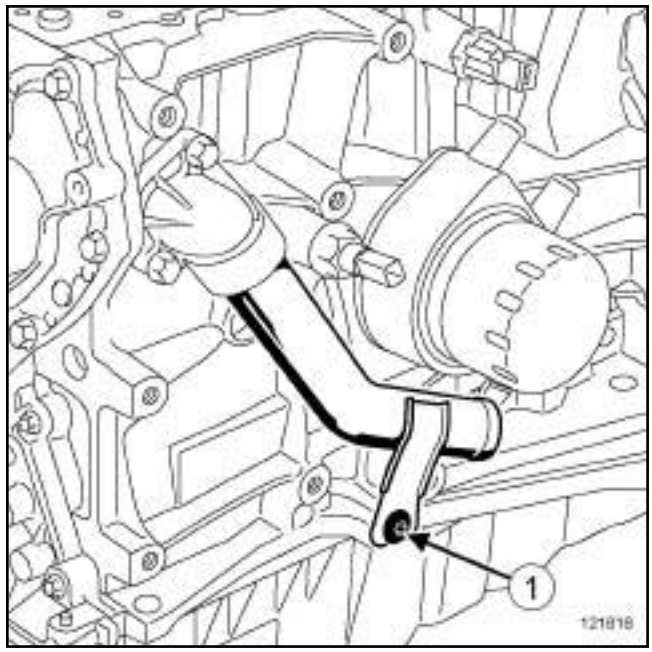

121616

❑ Remove:

- the coolant pump inlet pipe bolt (**1**) on the cylinder block,
- the coolant pump inlet pipe,

- the coolant pump inlet pipe seal.

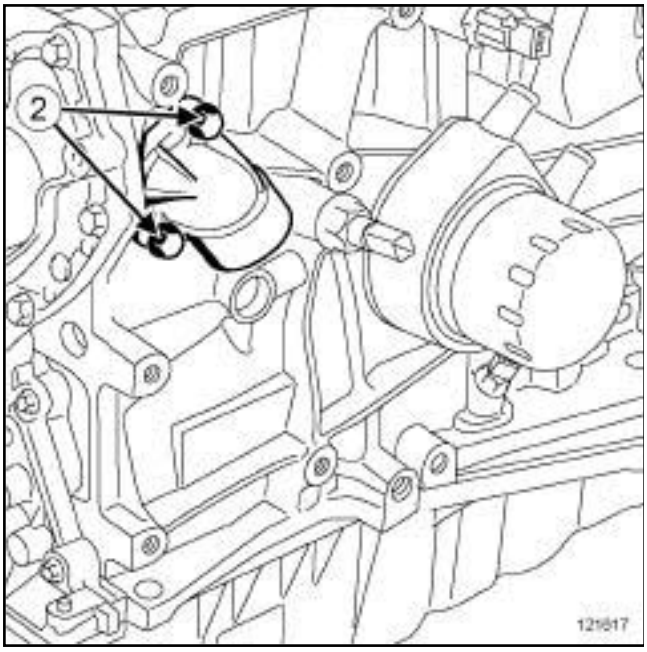

121617

❑ Remove:

- the coolant pump inlet pipe offset bolt (**2**) on the cylinder block,
- the coolant pump inlet pipe offset,
- the coolant pump inlet pipe offset seal.

REFITTING

I - REFITTING PREPARATION OPERATION

❑ **parts always to be replaced: seal between coolant pump inlet pipe and coolant pump inlet union (10,06,01,23)**.

❑ **parts always to be replaced: seal between coolant pump inlet pipe and coolant pump (10,06,01, 22)**.

❑ Use **SURFACE CLEANER** (see **Vehicle: Parts and ingredients for the repairwork**) (04B, Consumables - Products) to clean and degrease:

- the coolant pump inlet pipe seal mating face if it is being reused,
- the coolant pump inlet pipe seal mating face if it is being reused,
- the cylinder block gasket face.

II - REFITTING OPERATION FOR PART CONCERNED

❑ Refit:

- the coolant pump inlet pipe offset fitted with a new seal,
- the coolant pump inlet pipe offset bolt on the cylinder block.

❑ Torque tighten the **coolant pump inlet pipe offset bolts on the cylinder block (10 N.m)**.

❑ Refit:

- the coolant pump inlet pipe fitted with a new seal.
- the coolant pump inlet pipe bolt on the cylinder block.

❑ Torque tighten the **coolant pump inlet pipe bolt on the cylinder block (38 N.m)**.

❑ Connect the hose to the coolant pump inlet pipe.

❑ Fit the hose clip on the coolant pump inlet pipe using the tool **(Mot. 1448)**.

III - FINAL OPERATION

❑ Refit:

- the multifunction support (see **10A**, **Engine and cylinder block assembly**, **Multifunction support: Removal - Refitting**, page **10A-84**) ,
- the air conditioning compressor (see **Compressor: Removal - Refitting**) (62A, Air conditioning),
- the alternator (see **16A**, **Starting - Charging**, **Alternator: Removal - Refitting**, page **16A-1**) ,
- the accessories belt (see **11A**, **Top and front of engine**, **Accessories belt: Removal - Refitting**, page **11A-7**) ,
- the front bumper (see **Front bumper: Removal - Refitting**) (55A, Exterior protection),
- the front section of the front wheel arch liners (see **Front wheel arch liner: Removal - Refitting**) (55A, Exterior protection),
- the front wheels (see **Wheel: Removal - Refitting**) (35A, Wheels and tyres).

❑ Perform the following operations:

- fill the refrigerant circuit using a **refrigerant charging station** (see **Coolant circuit Draining - Refilling**) (62A, Air conditioning).
- fill and bleed the coolant circuit (see **19A**, **Cooling**, **Cooling circuit: Draining - Refilling**, page **19A-17**) .

F4R

- Refit:
  - the engine cover,
  - the engine undertray.
- Connect the battery (see **Battery : Removal - Refitting**) (80A, Battery).

Water pump inlet pipe: Removal - Refitting

F9Q

Essential special tooling	
Mot. 1448	Long nose pliers for hose clips.

Essential equipment
refrigerant charging station

Tightening torques ▽	
coolant pump inlet union bolts	**13 N.m**
coolant pump inlet pipe bolt	**38 N.m**

IMPORTANT

When working in the engine compartment, take care as the radiator fan(s) may start up unexpectedly (risk of being cut).

To avoid any risk of serious burns when the engine is hot:

- do not open the expansion bottle cap,
- do not drain the cooling system,
- do not open the bleed screw(s).

REMOVAL

I - REMOVAL PREPARATION OPERATION

❑ Position the vehicle on a two-post lift (see **Vehicle: Towing and lifting**) (02A, Lifting equipment).

❑ Disconnect the battery (see **Battery: Removal - Refitting**) (80A, Battery).

❑ Remove:

- the engine cover,
- the engine undertray bolts,
- the engine undertray.

❑ Drain:

- the refrigerant circuit using a **refrigerant charging station** (see **Coolant circuit Draining - Refilling**) (62A, Air conditioning),
- the cooling system (see **19A**, **Cooling**, **Cooling circuit: Draining - Refilling**, page **19A-17**) .

❑ Remove:

- the front wheels (see **Wheel: Removal - Refitting**) (35A, Wheels and tyres),
- the front section of the front wheel arch liners (see **Front wheel arch liner: Removal - Refitting**) (55A, Exterior protection),
- the front bumper (see **Front bumper: Removal - Refitting**) (55A, Exterior protection),
- the front impact cross member (see **Front impact cross member: Removal - Refitting**) (41A, Front lower structure),
- the headlights (see **Front headlight: Removal - Refitting**) (80B, Headlights),
- the front bumper supports (see **Front bumper support: Removal - Refitting**) (42A, Front upper structure),
- the accessories belt (see **11A**, **Top and front of engine**, **Accessories belt: Removal - Refitting**, page **11A-7**) .

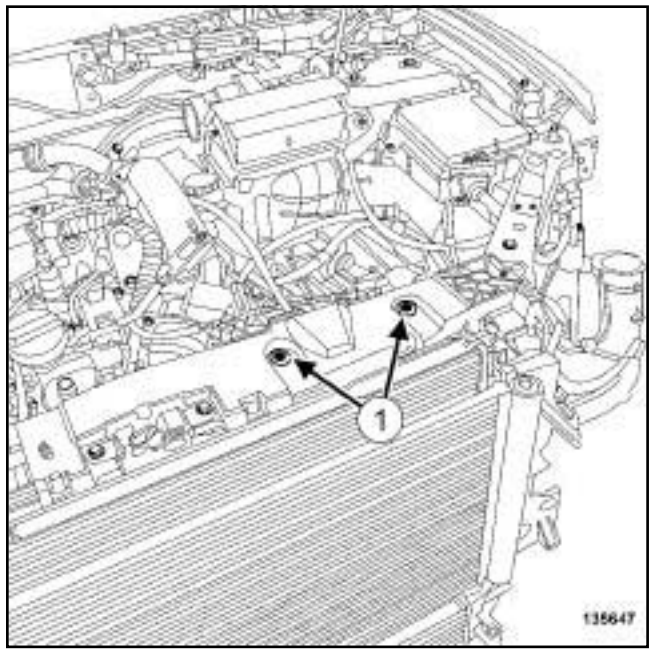

135647

❑ Remove:

- the bolts (**1**) of the engine wiring channel,
- the bonnet catch (see **Bonnet latch: Removal - Refitting**) (52A, Non-side opening element mechanisms).

F9Q

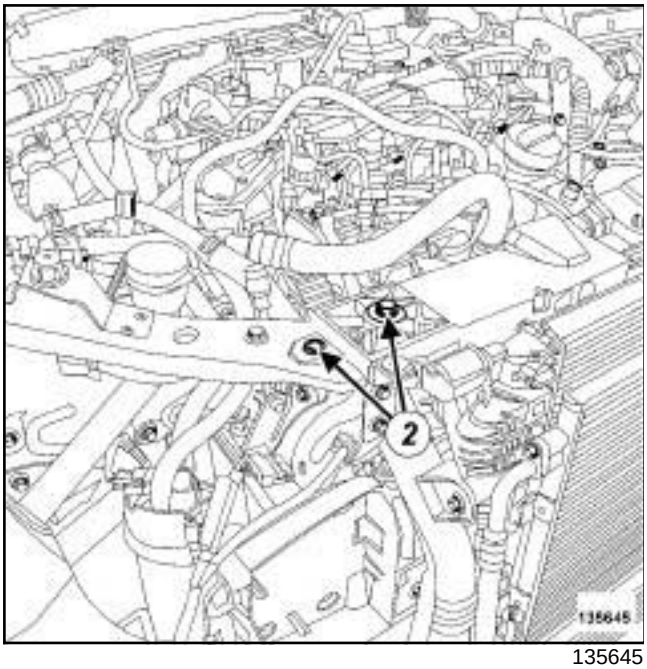

135645

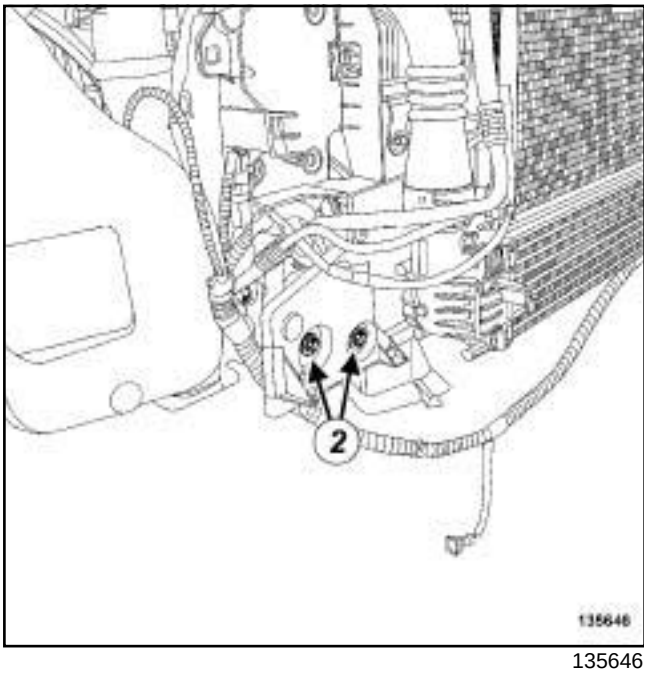

135646

❑ Remove the front end panel bolts (**2**) .

❑ Tilt the front end panel.

❑ Remove:

- the intercooler air outlet pipe (see **12B**, **Turbocharging**, **Intercooler air outlet pipe: Removal - Refitting**, page **12B-56**) ,
- the alternator (see **16A**, **Starting - Charging**, **Alternator: Removal - Refitting**, page **16A-1**) ,
- the compressor (see **Compressor: Removal - Refitting**) (62A, Air conditioning),
- the multifunction support (see **10A**, **Engine and cylinder block assembly**, **Multifunction support: Removal - Refitting**, page **10A-84**) .

II - OPERATION FOR REMOVAL OF PART CONCERNED

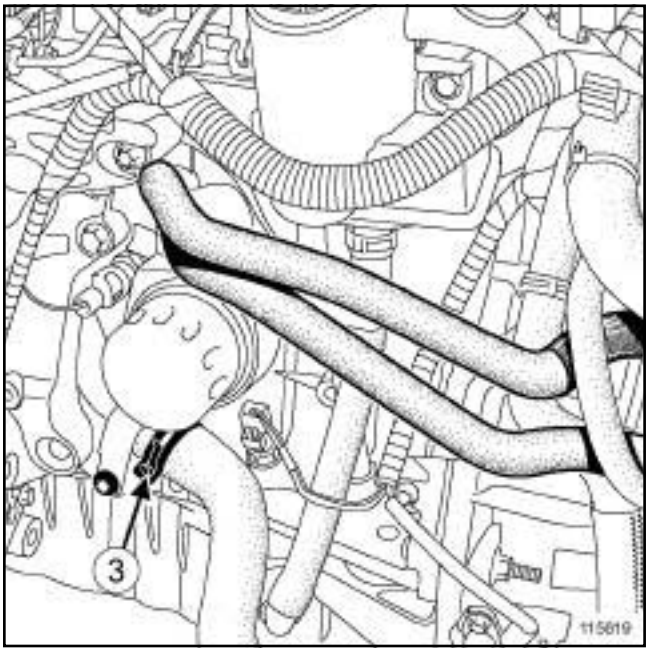

115619

❑ Remove the clip (**3**) on the coolant pump inlet pipe hose using the tool **(Mot. 1448)**.

❑ Disconnect the hose from the coolant pump inlet pipe.

F9Q

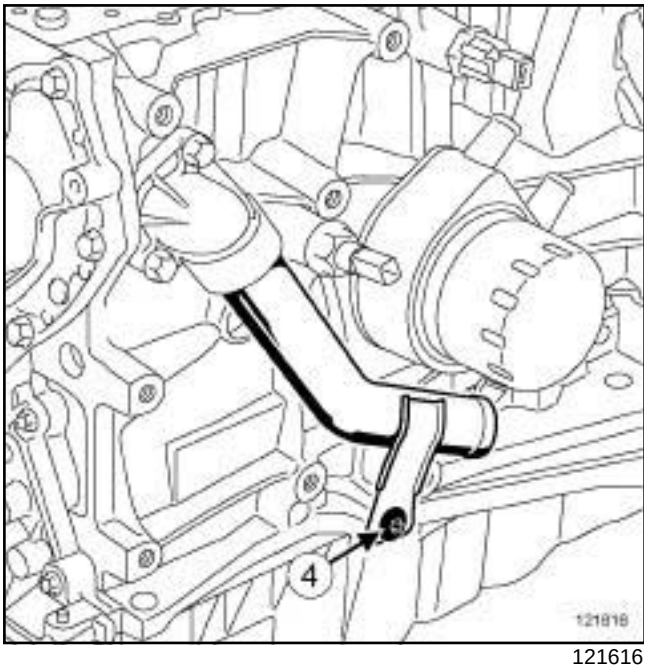

121616

❑ Remove:

- the coolant pump inlet pipe bolt (**4**) on the cylinder block,
- the coolant pump inlet pipe,
- the coolant pump inlet pipe seal.

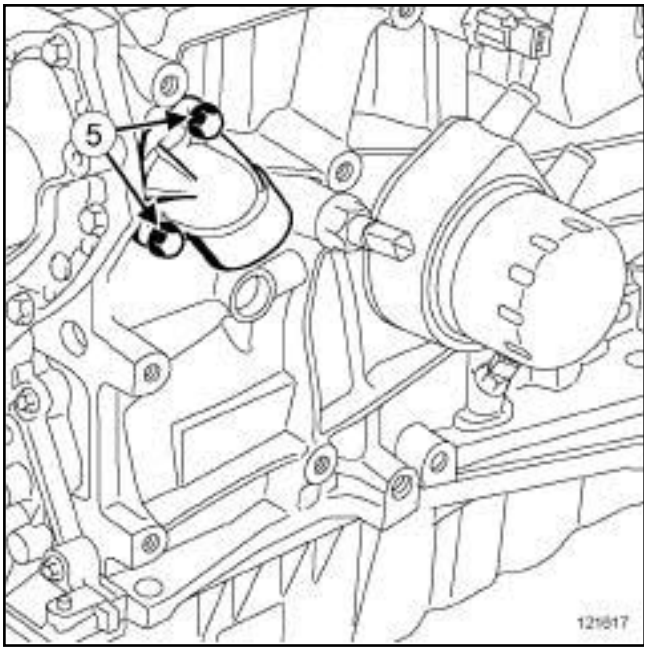

121617

❑ Remove:

- the bolts (**5**) from the coolant pump inlet union,
- the coolant pump inlet union,
- the coolant pump inlet union seal.

REFITTING

I - REFITTING PREPARATION OPERATION

❑ Use **SURFACE CLEANER** (see **Vehicle: Parts and ingredients for the repairwork**) (04B, Consumables - Products) to clean and degrease:

- the mating face of the coolant pump inlet pipe seal on the coolant pump inlet pipe in case of reuse,
- the mating faces of the coolant pump inlet pipe seal if it is being reused,
- the cylinder block gasket face.

❑ **parts always to be replaced: seal between coolant pump inlet pipe and coolant pump inlet union (10,06,01,23)**,

parts always to be replaced: seal between coolant pump inlet union and coolant pump (10,06, 01,24),

parts always to be replaced: Intercooler air outlet pipe (10,09,04,03).

II - REFITTING OPERATION FOR PART CONCERNED

❑ Refit the coolant pump inlet union fitted with a new seal.

❑ Torque tighten the **coolant pump inlet union bolts (13 N.m)**.

❑ Refit the coolant pump inlet pipe fitted with a new seal.

❑ Torque tighten the **coolant pump inlet pipe bolt (38 N.m)**.

❑ Connect the hose to the coolant pump inlet pipe.

❑ Fit the hose clip on the coolant pump inlet pipe using the tool **(Mot. 1448)**.

III - FINAL OPERATION

❑ Refit:

- the multifunction support (see **10A**, **Engine and cylinder block assembly**, **Multifunction support: Removal - Refitting**, page **10A-84**) ,
- the compressor (see **Compressor: Removal - Refitting**) (62A, Air conditioning),
- the alternator (see **16A**, **Starting - Charging**, **Alternator: Removal - Refitting**, page **16A-1**) ,
- a new intercooler air outlet pipe (see **12B**, **Turbocharging**, **Intercooler air outlet pipe: Removal - Refitting**, page **12B-56**) .

- the front panel,
- the bonnet catch (see **Bonnet latch: Removal - Refitting**) (52A, Non-side opening element mechanisms),
- the bolts for the engine wiring harness channel,
- the accessories belt (see **11A**, **Top and front of engine**, **Accessories belt: Removal - Refitting**, page **11A-7**) ,
- the front bumper supports (see **Front bumper support: Removal - Refitting**) (42A, Front upper structure),
- the headlights (see **Front headlight: Removal - Refitting**) (80B, Headlights),
- the frontal impact cross member (see **Front impact cross member: Removal - Refitting**) (41A, Front lower structure),
- the front bumper (see **Front bumper: Removal - Refitting**) (55A, Exterior protection),
- the front section of the front wheel arch liners (see **Front wheel arch liner: Removal - Refitting**) (55A, Exterior protection),
- the front wheels (see **Wheel: Removal - Refitting**) (35A, Wheels and tyres),
- the engine undertray,
- the engine cover.

❏ Connect the battery (see **Battery: Removal - Refitting**) .

❏ Perform the following operations:

- fill the refrigerant circuit using a **refrigerant charging station** (see **Coolant circuit Draining - Refilling**) (62A, Air conditioning).
- fill and bleed the coolant circuit (see **19A**, **Cooling**, **Cooling circuit: Draining - Refilling**, page **19A-17**) .

Essential special tooling	
Ms. 583	Hose clamp pliers.
Mot. 1448	Long nose pliers for hose clips.
Mot. 1202-01	Pliers for large hose clips.
Mot. 1202-02	Pliers for small hose clips.

IMPORTANT

The circuits are designed to be pressurised, so be careful at high temperatures (risk of serious burns).

Do not remove the cap from the expansion bottle while the engine is hot.

Take care when carrying out a repair under the bonnet, as the radiator fan(s) may start to operate without warning.

Do not open the bleed screw(s) with the engine running.

WARNING

The coolant helps to keep the engine running properly (heat exchange).

The system does not operate using pure water.

WARNING

If the coolant is leaking from the expansion bottle cap, replace the valve.

WARNING

Before the operation, protect the electrical accessories to prevent any risk of short circuiting and protect the belts to avoid damaging them.

REMOVAL

I - REMOVAL PREPARATION OPERATION

❏ Remove the expansion bottle cap.

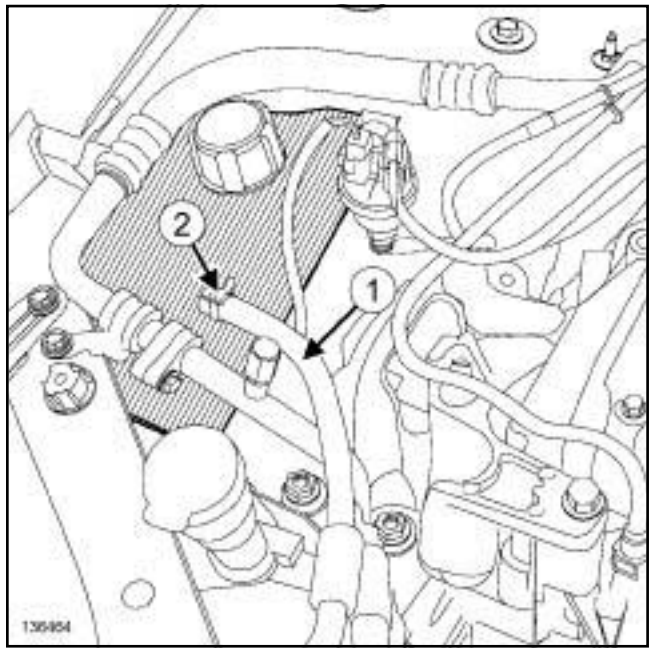

136464

❏ Fit the tool **(Ms. 583)** on the degassing hose (**1**) of the expansion bottle.

❏ Using the tool **(Mot. 1448)** or **(Mot. 1202-01)** or **(Mot. 1202-02)**, remove the clip (**2**) from the expansion bottle degassing hose.

❏ Disconnect the degassing hose from the expansion bottle.

II - OPERATION FOR REMOVAL OF PART CONCERNED

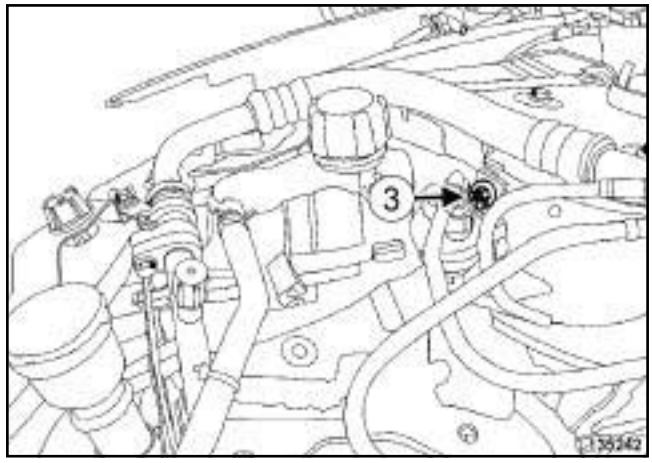

135242

❏ Remove the expansion bottle nut (**3**) on the vehicle body.

❏ Remove the expansion bottle.

F4R or K4M

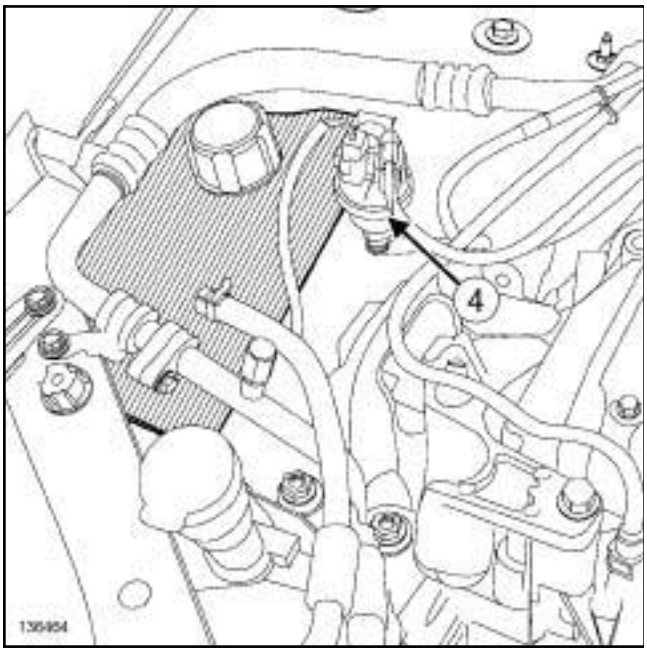

136464

- ❑ Move aside the fuel vapour absorber bleed solenoid valve (**4**) .
- ❑ Disconnect the fuel vapour absorber bleed solenoid valve wiring from the expansion bottle.

F9Q or K9K

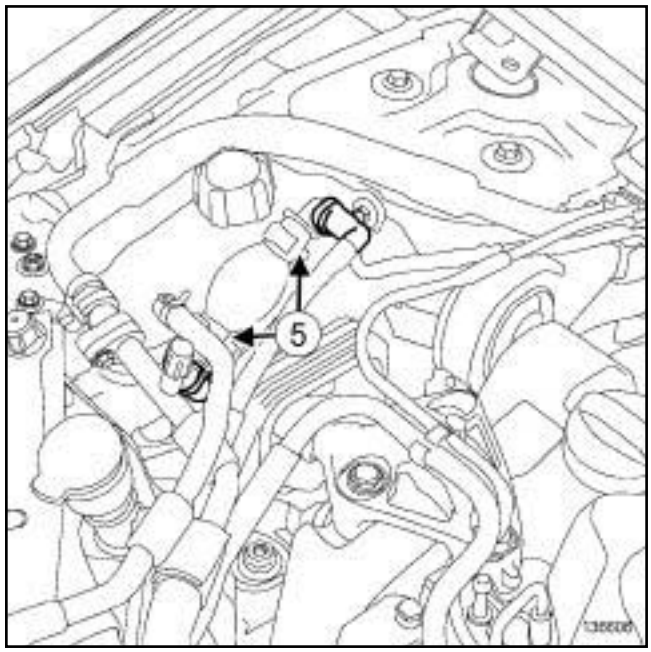

136606

- ❑ Unclip the manual priming pump from the expansion bottle at (**5**) .
- ❑ Remove the manual priming pump.

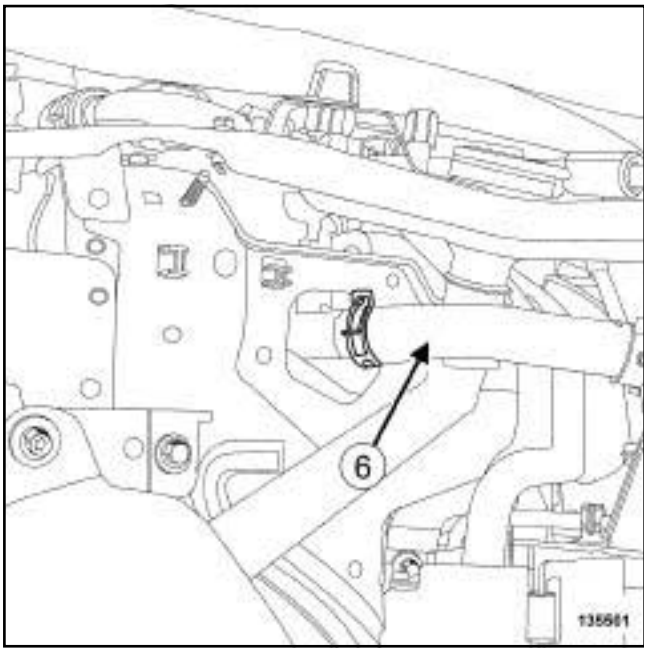

135501

- ❑ Fit the tool **(Ms. 583)** on the bottom hose of the expansion bottle.
- ❑ Using the tool **(Mot. 1448)** or **(Mot. 1202-01)** or **(Mot. 1202-02)**, remove the clip (**6**) from the expansion bottle bottom hose.
- ❑ Disconnect the bottom hose from the expansion bottle.
- ❑ Remove the expansion bottle.

REFITTING

I - REFITTING OPERATION FOR PART CONCERNED

- ❑ Position the expansion bottle.
- ❑ Connect the bottom hose to the expansion bottle.
- ❑ Using the tool **(Mot. 1448)** or **(Mot. 1202-01)** or **(Mot. 1202-02)**, fit the clip for the expansion bottle bottom hose.
- ❑ Remove the tool **(Ms. 583)** from the bottom hose of the expansion bottle.

F9Q or K9K

- ❑ Fit the manual priming pump.
- ❑ Clip the manual priming pump onto the expansion bottle.

F4R or K4M

- ❑ Fit the fuel vapour absorber bleed solenoid valve.
- ❑ Connect the wiring of the fuel vapour absorber bleed solenoid valve to the expansion bottle.

II - FINAL OPERATION

- ❑ Refit the expansion bottle nut onto the vehicle body.
- ❑ Connect the degassing hose to the expansion bottle.
- ❑ Using the tool **(Mot. 1448)** or **(Mot. 1202-01)** or **(Mot. 1202-02)**, fit the clip for the expansion bottle degassing hose.
- ❑ Remove the tool **(Ms. 583)** from the expansion bottle degassing hose.
- ❑ Top up the coolant level in the expansion bottle.
- ❑ Refit the expansion bottle cap.

F4R

Essential special tooling	
Ms. 583	Hose clamp pliers.
Mot. 1448	Long nose pliers for hose clips.

REMOVAL

REMOVAL PREPARATION OPERATION

- ❑ Position the vehicle on a two-post lift (see **Vehicle: Towing and lifting**) (02A, Lifting equipment).
- ❑ Disconnect the battery (see **Battery: Removal - Refitting**) (80A, Battery).
- ❑ Remove:
  - the engine undertray bolts,
  - the engine undertray.

135754

- ❑ Remove the clips (**1**) from the electric coolant pump.

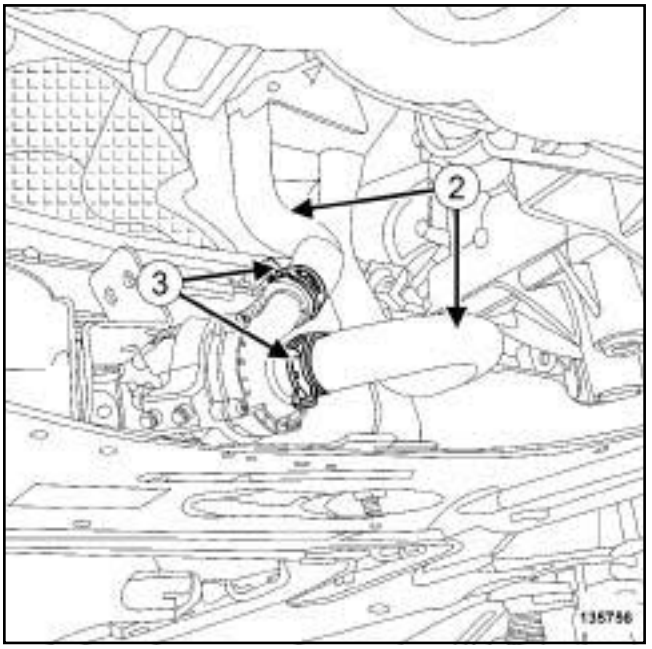

135756

- ❑ Fit the tools **(Ms. 583)** on the hoses (**2**) .
- ❑ Separate the clips (**3**) on the electric coolant pump hoses using the tool **(Mot. 1448)**.
- ❑ Disconnect the electric coolant pump hoses.

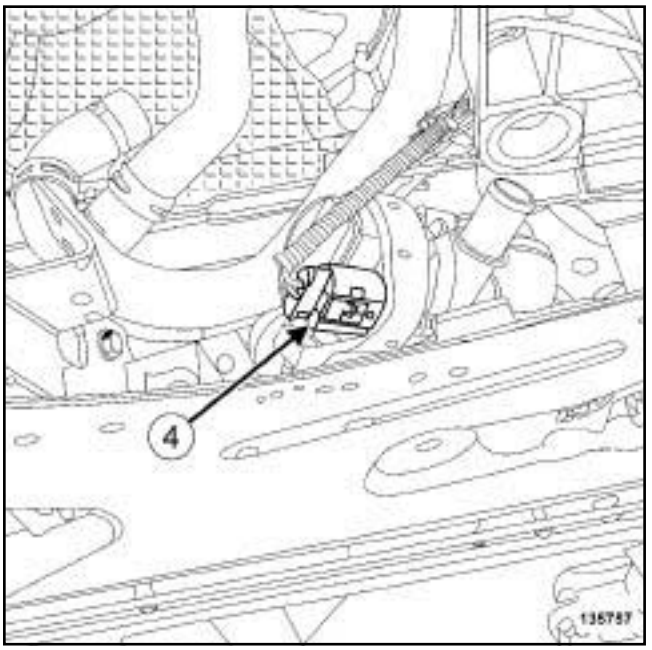

135757

- ❑ Disconnect the connector (**4**) from the electric coolant pump.
- ❑ Remove the electric coolant pump.

F4R

REFITTING

I - REFITTING OPERATION FOR PART CONCERNED

❏ Refit the electric coolant pump.

❏ Connect

- the electric coolant pump connector,
- the electric coolant pump hoses.

❏ Position the clips on the electric coolant pump hoses using the tool **(Mot. 1448)**.

❏ Remove the tools **(Ms. 583)** from the cooling hoses.

II - FINAL OPERATION

❏ Refit:

- the electric coolant pump clips,
- the engine undertray.

❏ Connect the battery (see **Battery: Removal - Refitting**) (80A, Battery).

❏ Perform the following operations:

- top up the coolant level,
- bleed the cooling system (see **19A**, **Cooling**, **Cooling circuit: Draining - Refilling**, page **19A-17**) .

K4M

IMPORTANT

The circuits are designed to be pressurised, so be careful at high temperatures (risk of serious burns).

Do not remove the cap from the expansion bottle while the engine is hot.

Take care when carrying out a repair under the bonnet, as the radiator fan(s) may start to operate without warning.

Do not open the bleed screw(s) with the engine running.

WARNING

Before the operation, protect the electrical accessories to prevent any risk of short circuiting and protect the belts to avoid damaging them.

WARNING

The coolant helps to keep the engine running properly (heat exchange).

The system does not operate using pure water.

REMOVAL

I - REMOVAL PREPARATION OPERATION

❑ Remove the front engine cover.

II - OPERATION FOR REMOVAL OF PART CONCERNED

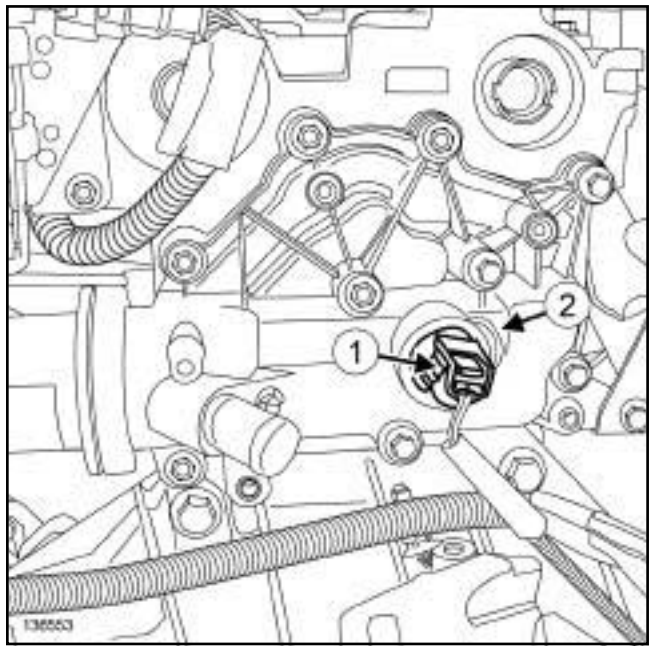

136553

❑ Disconnect the coolant temperature sensor connector (**1**) .

❑ Remove:

- the clip (**2**) from the coolant temperature sensor,
- the coolant temperature sensor,
- the coolant temperature sensor seal.

REFITTING

I - REFITTING PREPARATION OPERATION

❑ **parts always to be replaced: coolant temperature sensor seal (10,06,01,18)**.

❑ Use **SURFACE CLEANER** (see **Vehicle: Parts and ingredients for the repairwork**) (04B, Consumables - Products) to clean and degrease:

- the seal housing in the water chamber,
- the seal mating face of the coolant temperature sensor if reused.

II - REFITTING OPERATION FOR PART CONCERNED

❑ Refit:

- the coolant temperature sensor fitted with a new seal,
- the coolant temperature sensor clip.

❑ Connect the coolant temperature sensor connector.

K4M

III - FINAL OPERATION

❏ Perform the following operations:

- top up of the coolant level,
- bleed the cooling system (see **19A**, **Cooling**, **Cooling circuit: Draining - Refilling**, page **19A-17**) .

❏ Refit the engine cover.

K9K

IMPORTANT
Wear leaktight gloves (Nitrile type) for this operation.

REMOVAL

I - OPERATION FOR REMOVAL OF PART CONCERNED

❏ Position the vehicle on a two-post lift (see **Vehicle: Towing and lifting**) (02A, Lifting equipment).

❏ Remove:

- the engine cover,
- the battery (see **Battery: Removal - Refitting**) (80A, Battery),
- the battery tray (see **Battery tray: Removal - Refitting**) (80A, Battery),
- the front wheels (see **Wheel: Removal - Refitting**) (35A, Wheels and tyres),
- the front section of the front wheel arch liners (see **Front wheel arch liner: Removal - Refitting**) (55A, Exterior protection),
- the engine undertray bolts,
- the engine undertray,
- the front bumper (see **Front bumper: Removal - Refitting**) (55A, Exterior protection).

❏ Drain the cooling system (see **19A**, **Cooling**, **Cooling circuit: Draining - Refilling**, page **19A-17**) .

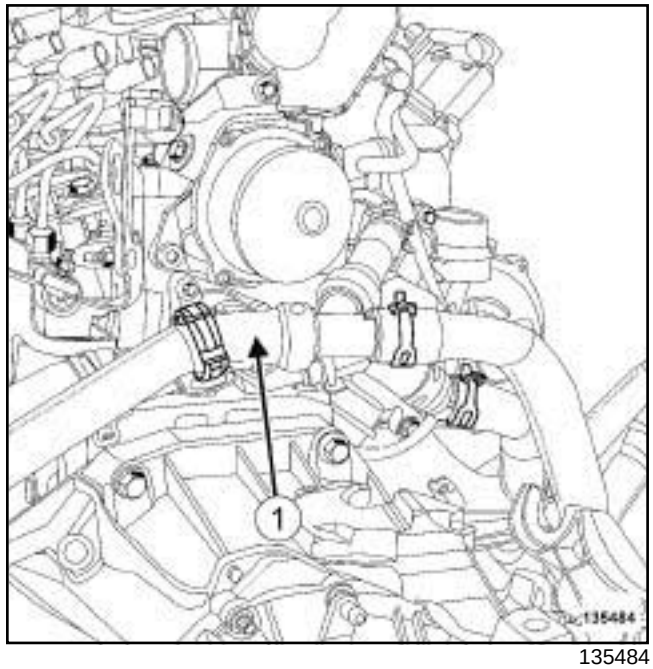

135484

❏ Unclip the expansion bottle bottom cooling hose (**1**) from the coolant outlet unit.

II - OPERATION FOR REMOVAL OF PART CONCERNED

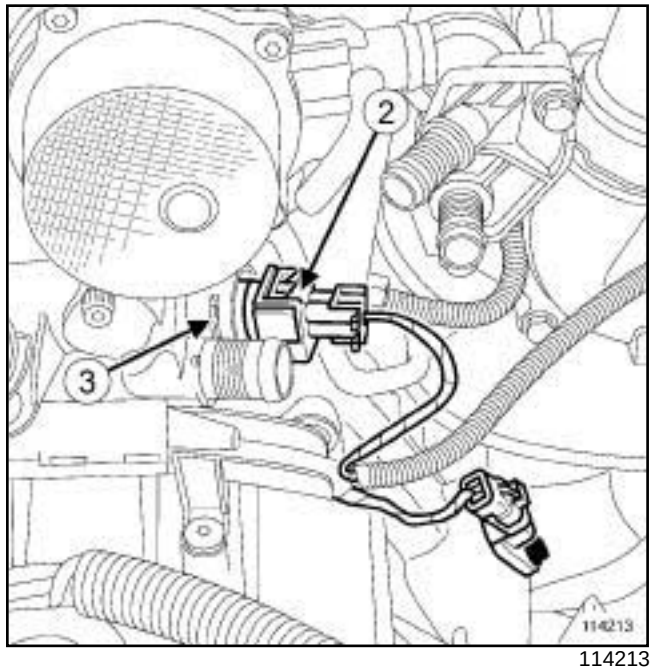

114213

❏ Disconnect the coolant temperature sensor connector (**2**) .

❏ Remove:

- the clip (**3**) from the coolant temperature sensor,
- the coolant temperature sensor,
- the coolant temperature sensor seal.

K9K

REFITTING

I - REFITTING PREPARATION OPERATION

❑ **parts always to be replaced: coolant temperature sensor seal (10,06,01,18)**.

❑ Use **SURFACE CLEANER** (see **Vehicle: Parts and ingredients for the repairwork**) (04B, Consumables - Products) to clean and degrease:

- the mating face of the coolant temperature sensor if it is to be reused,
- the coolant outlet unit.

II - REFITTING OPERATION FOR PART CONCERNED

❑ Refit:

- a new coolant temperature sensor seal on the coolant temperature sensor,
- the coolant temperature sensor,
- the coolant temperature sensor clip.

❑ Connect the coolant temperature sensor connector.

III - FINAL OPERATION

❑ Clip the expansion bottle bottom cooling hose onto the coolant outlet unit.

❑ Refit:

- the front bumper (see **Front bumper: Removal - Refitting**) (55A, Exterior protection),
- the engine undertray,
- the front section of the front wheel arch liners (see **Front wheel arch liner: Removal - Refitting**) (55A, Exterior protection),
- the front wheels (see **Wheel: Removal - Refitting**) (35A, Wheels and tyres),
- the battery tray (see **Battery tray: Removal - Refitting**) (80A, Battery),
- the battery (see **Battery : Removal - Refitting**) (80A, Battery),
- the engine cover.

❑ Fill and bleed the cooling system (see **19A**, **Cooling**, **Cooling circuit: Draining - Refilling**, page **19A-17**) .

F9Q

IMPORTANT

The circuits are designed to be pressurised, so be careful at high temperatures (risk of serious burns).

Do not remove the cap from the expansion bottle while the engine is hot.

Take care when carrying out a repair under the bonnet, as the radiator fan(s) may start to operate without warning.

Do not open the bleed screw(s) with the engine running.

WARNING

Before the operation, protect the electrical accessories to prevent any risk of short circuiting and protect the belts to avoid damaging them.

WARNING

The coolant helps to keep the engine running properly (heat exchange).

The system does not operate using pure water.

REMOVAL

I - REMOVAL PREPARATION OPERATION

❑ Position the vehicle on a two-post lift (see **Vehicle: Towing and lifting**) (02A, Lifting equipment).

❑ Drain the cooling system (see **19A**, **Cooling**, **Cooling circuit: Draining - Refilling**, page **19A-17**) .

❑ Remove:

- the engine cover,
- the battery (see **Battery: Removal - Refitting**) (80A, Battery),
- the diesel injection computer (see **13B**, **Diesel injection**, **Diesel injection computer: Removal - Refitting**, page **13B-17**) ,
- the battery tray (see **Battery tray: Removal - Refitting**) (80A, Battery).

II - OPERATION FOR REMOVAL OF PART CONCERNED

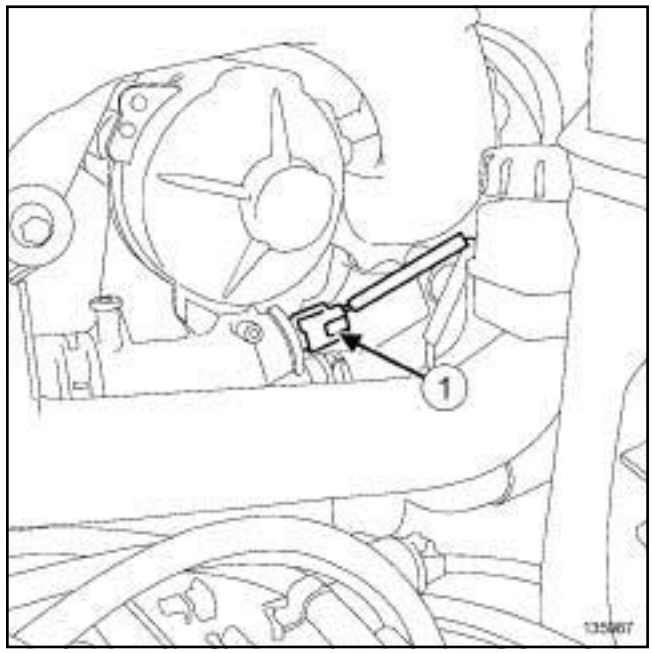

135987

❑ Disconnect the coolant temperature sensor connector (**1**) .

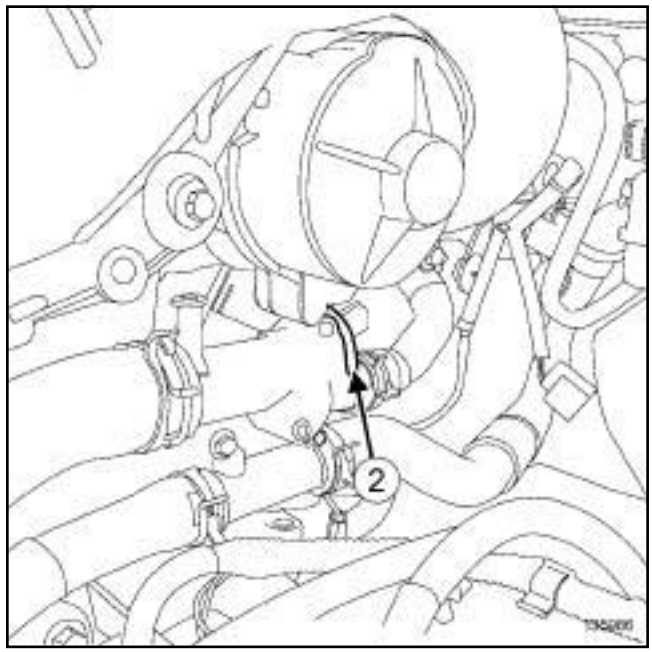

135986

❑ Remove:

- the clip (**2**) from the coolant temperature sensor,
- the coolant temperature sensor,
- the coolant temperature sensor seal.

F9Q

REFITTING

I - REFITTING PREPARATION OPERATION

- Use **SURFACE CLEANER** (see **Vehicle: Parts and ingredients for the repairwork**) (04B, Consumables - Products) to clean and degrease the mating face of the coolant temperature sensor on the coolant outlet unit.
- **parts always to be replaced: coolant temperature sensor seal (10,06,01,18)**.

II - REFITTING OPERATION FOR PART CONCERNED

- Refit:
  - a new seal on the coolant temperature sensor,
  - the coolant temperature sensor,
  - the coolant temperature sensor clip.
- Connect the coolant temperature sensor connector.

III - FINAL OPERATION

- Refit:
  - the battery tray (see **Battery tray: Removal - Refitting**) (80A, Battery),
  - the diesel injection computer (see **13B**, **Diesel injection**, **Diesel injection computer: Removal - Refitting**, page **13B-17**) ,
  - the battery (see **Battery : Removal - Refitting**) (80A, Battery),
  - the engine cover.
- Fill and bleed the cooling system (see **19A**, **Cooling**, **Cooling circuit: Draining - Refilling**, page **19A-17**) .

F4R

Tightening torques ▽	
coolant temperature sensor	**32 N.m**

IMPORTANT

The circuits are designed to be pressurised, so be careful at high temperatures (risk of serious burns).

Do not remove the cap from the expansion bottle while the engine is hot.

Take care when carrying out a repair under the bonnet, as the radiator fan(s) may start to operate without warning.

Do not open the bleed screw(s) with the engine running.

WARNING

Before the operation, protect the electrical accessories to prevent any risk of short circuiting and protect the belts to avoid damaging them.

WARNING

The coolant helps to keep the engine running properly (heat exchange).

The system does not operate using pure water.

REMOVAL

I - REMOVAL PREPARATION OPERATION

❑ Position the vehicle on a two-post lift (see **Vehicle: Towing and lifting**) (02A, Lifting equipment).

❑ Remove the front engine cover.

II - OPERATION FOR REMOVAL OF PART CONCERNED

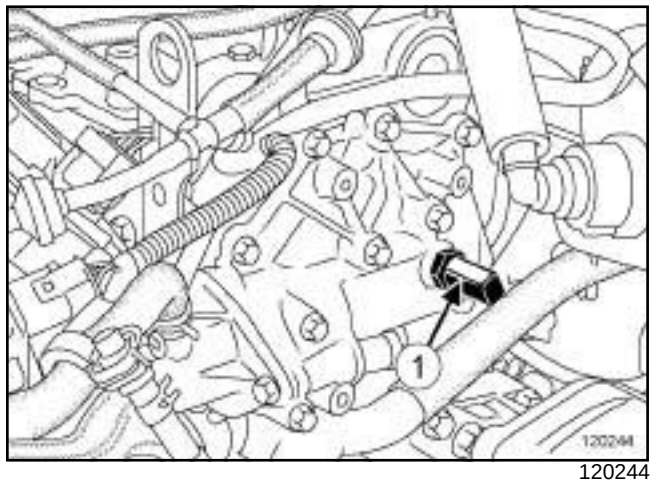

120244

❑ Disconnect the coolant temperature sensor connector.

❑ Remove the coolant temperature sensor (**1**) .

REFITTING

REFITTING OPERATION FOR PART CONCERNED

❑

Note:

Apply 1 to 2 drops of **FRENETANCHE** (see **Vehicle: Parts and ingredients for the repairwork**) (04B, Consumables - Products).

❑ Refit the coolant temperature sensor.

❑ Torque tighten the **coolant temperature sensor (32 N.m)**.

❑ Connect the coolant temperature sensor connector.

❑ Perform the following operations:

- top up the coolant level,
- bleed the cooling system (see **19A**, **Cooling**, **Cooling circuit: Draining - Refilling**, page **19A-17**) .

❑ Refit the engine cover.

K4M

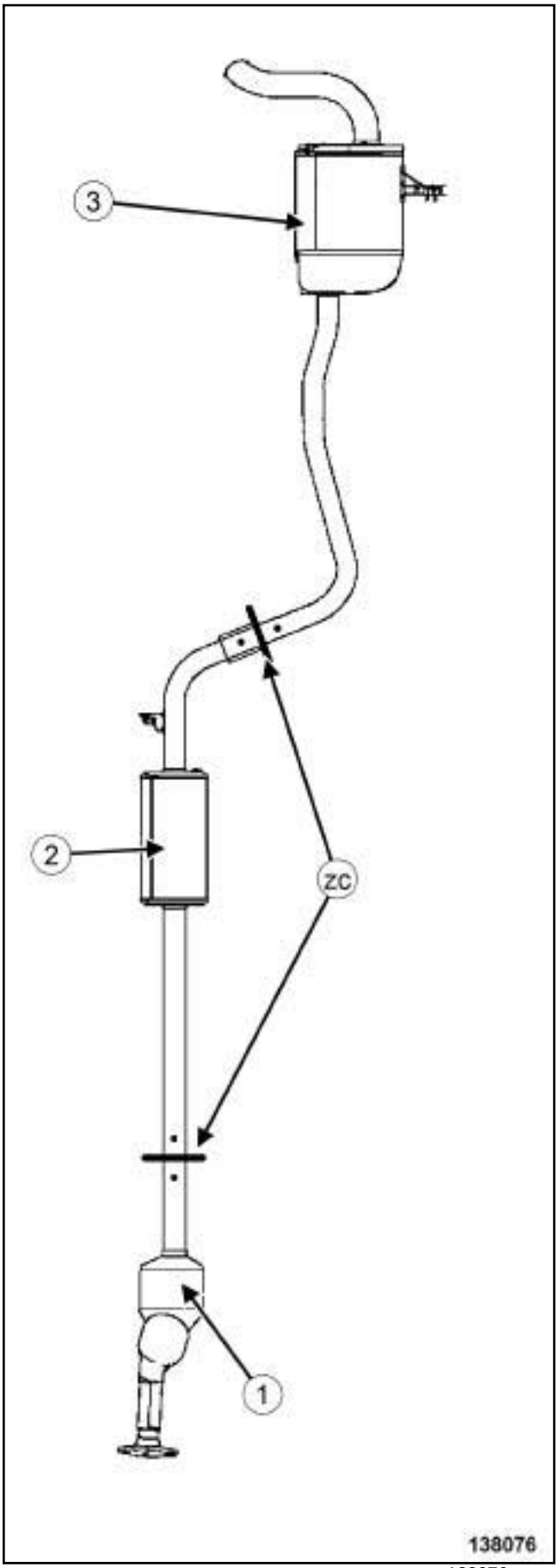

138076

(**1**)	Catalytic converter
(**2**)	Expansion chamber
(**3**)	Silencer
(**zc**)	Area to be cut

K9K, and 830 or 832

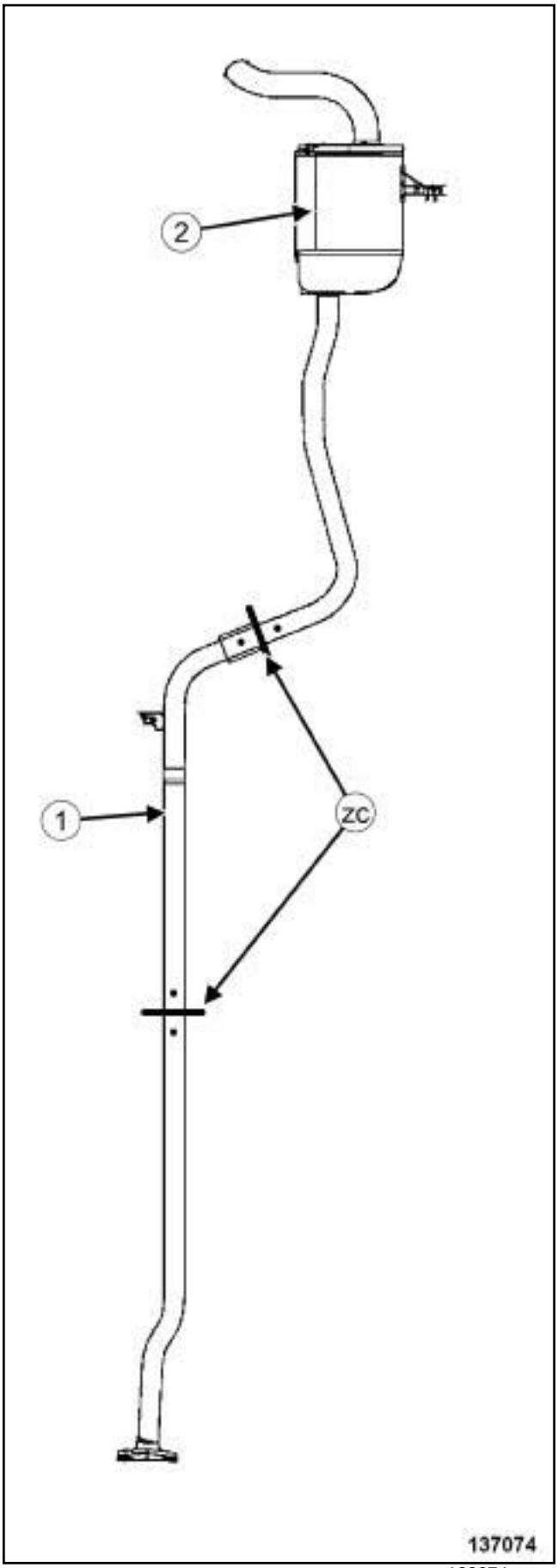

138074

(**1**)	Connecting pipe
(**2**)	Silencer
(**zc**)	Area to be cut

K9K, and 834 or 836

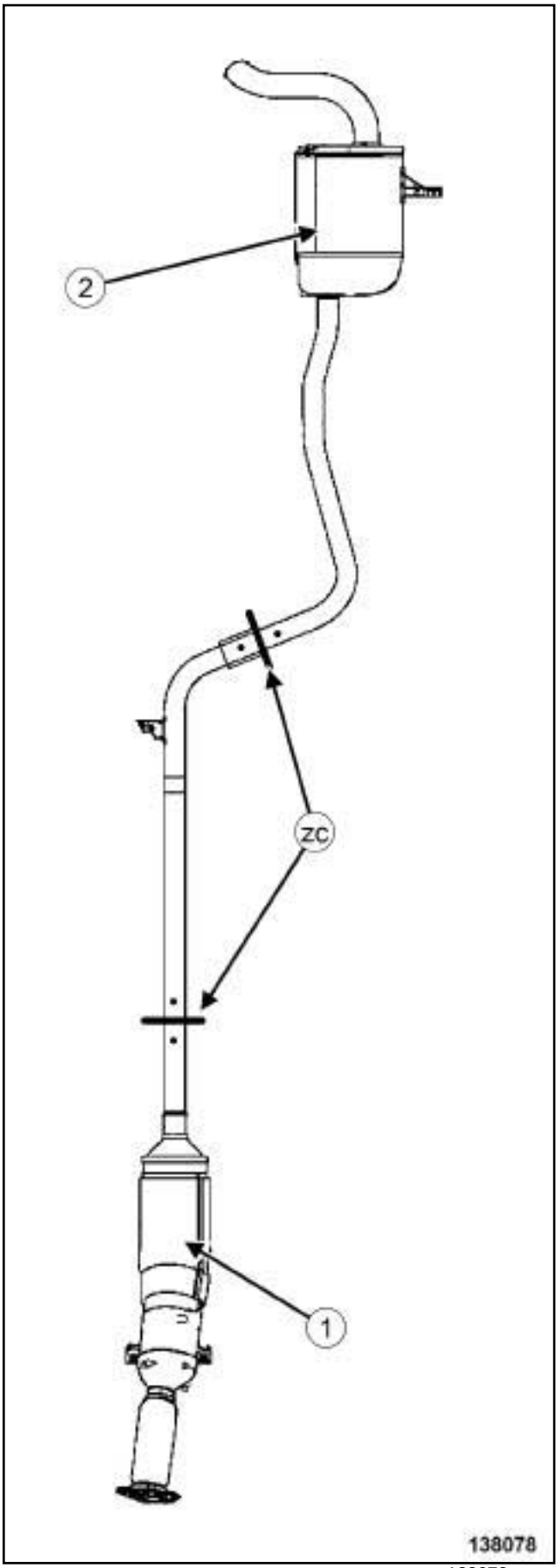

138078

(**1**)	Particle filter
(**2**)	Silencer
(**zc**)	Area to be cut

F9Q

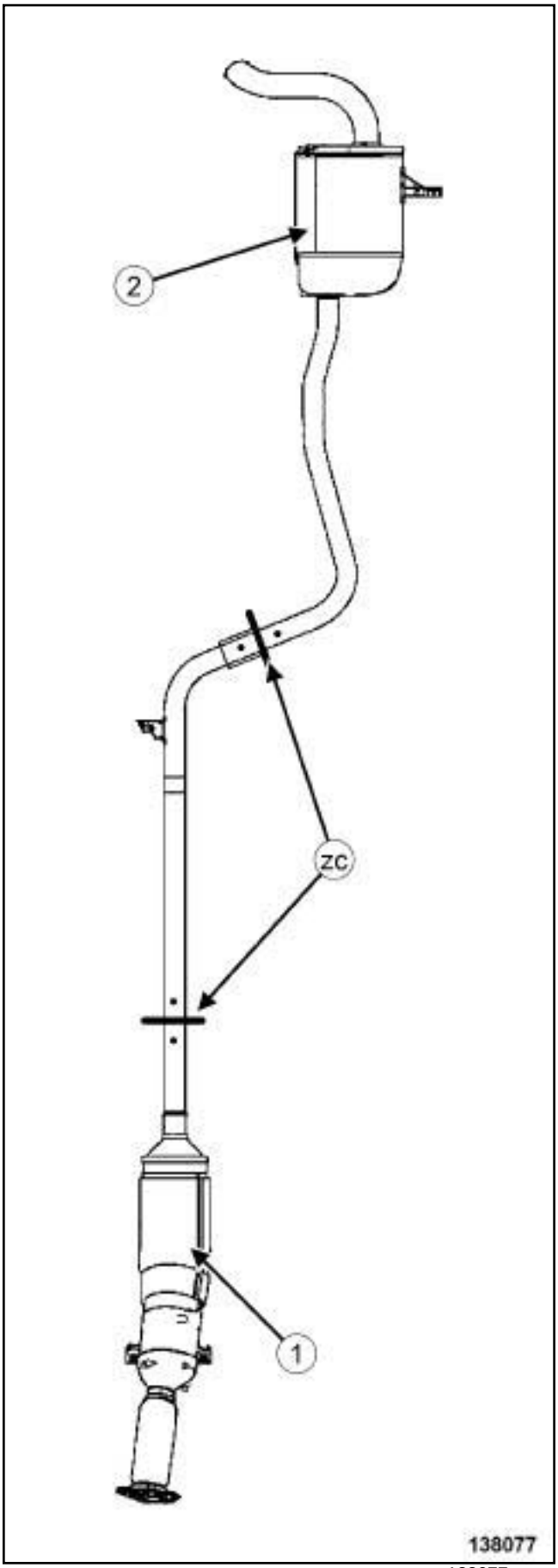

138077

(**1**)	Particle filter
(**2**)	Silencer
(**zc**)	Area to be cut

F4R

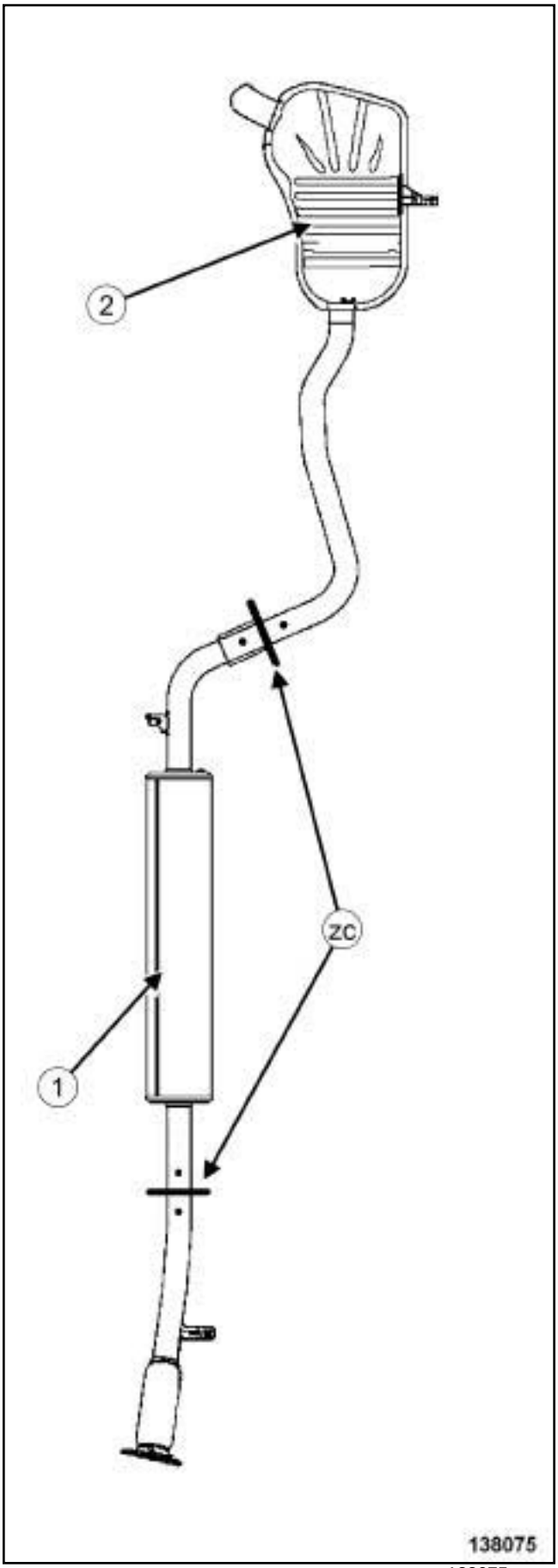

138075

(**1**)	Connecting pipe
(**2**)	Silencer
(**zc**)	Area to be cut

Essential special tooling	
Mot. 1199-01	35/50 mm diameter and 50/95 mm diameter exhaust pipe cutting tool. Complete assembly in kit.

The whole exhaust pipe is made of stainless steel.

The catalytic converter reaches high temperatures; do not park the vehicle close to flammable materials.

WARNING

To prevent the surrounding components from overheating, do not damage (tear, pierce, bend, etc.) a heat shield.

Any damaged heat shields must be replaced.

Note:

The sealing between the exhaust manifold surface and the catalytic converter must be perfect.

All seals removed must be replaced.

The catalytic converter must not be subjected to mechanical impacts during removal or refitting, as this could damage it.

IMPORTANT

Catalytic converters contain ceramic fibres, these are contained within a closed unit, and cannot disperse. Drilling or cutting catalytic converters is prohibited.

SPECIAL NOTES ON THE EXHAUST PIPE

1 - Cutting the exhaust pipe

The exhaust pipe is a single unit type.

To replace one of the components, the exhaust pipe must be cut.

It is essential:

- to correctly identify the area to be cut,

- to use the cutting tool **(Mot. 1199-01)**,

- to position the After-Sales sleeve correctly.

2 - Identifying the area to be cut

Two marks on the exhaust pipe indicate the area to be cut (see **19B**, **Exhaust**, **Exhaust: Parts and consumables for the repair work**, page **19B-1**) .

a - Front area to be cut

K4M

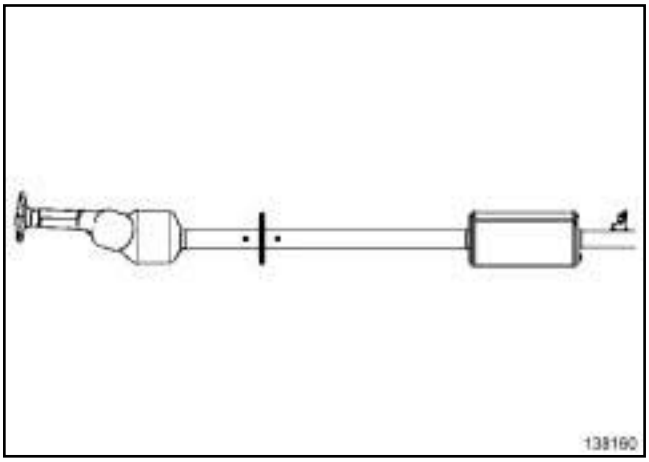

138160

K9K, and 830 or 832

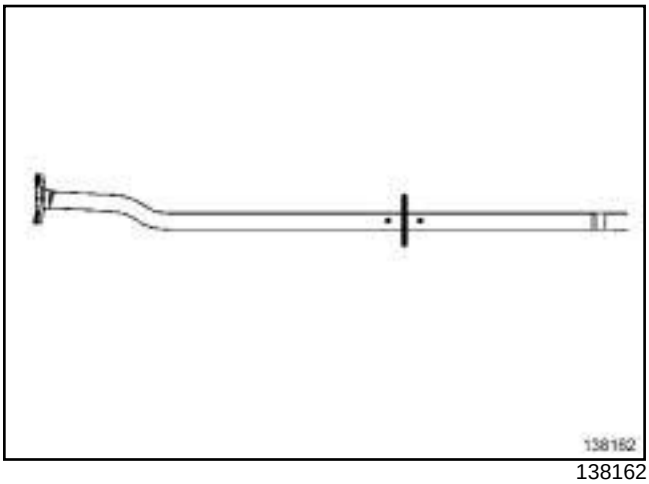

138162

K9K, and 834 or 836

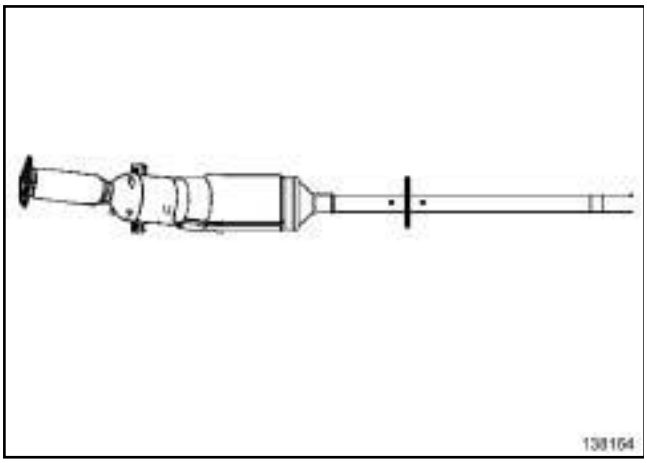

138164

F9Q

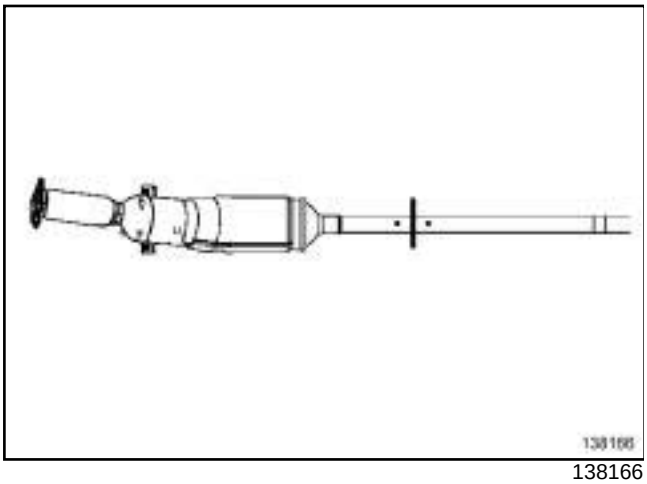

138166

F4R

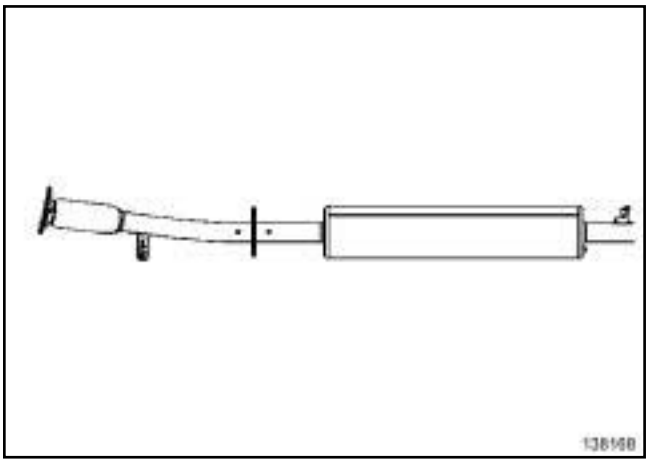

138168

b - Rear area to be cut

K4M

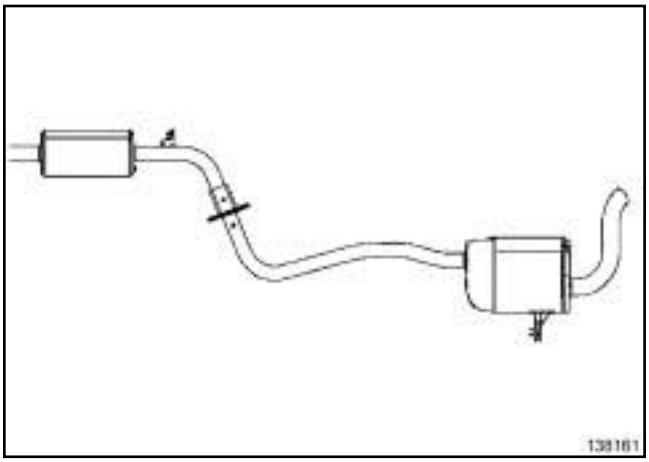

138161

K9K, and 830 or 832

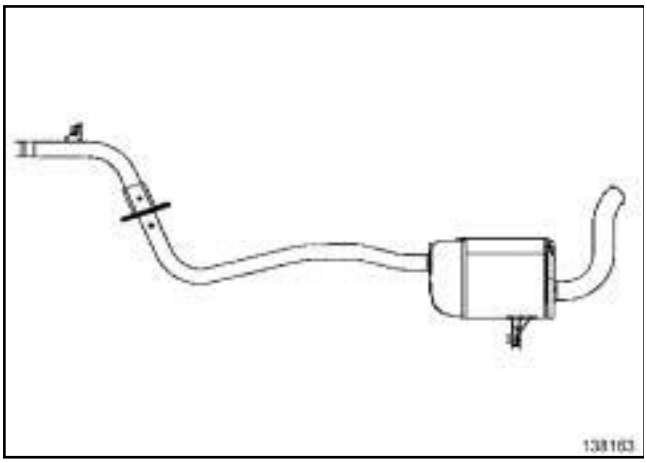

138163

F9Q

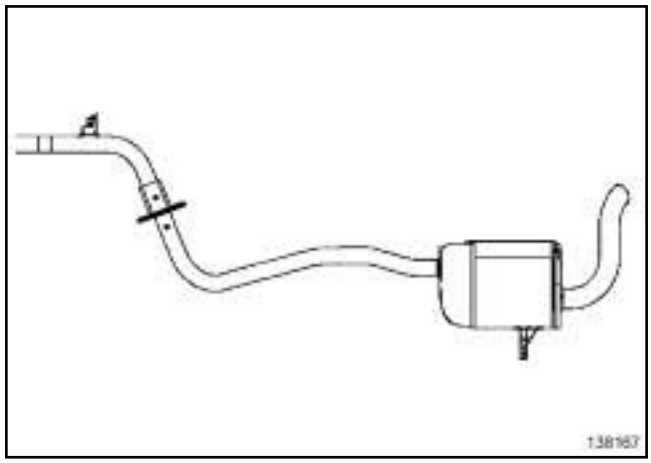

138167

K9K, and 834 or 836

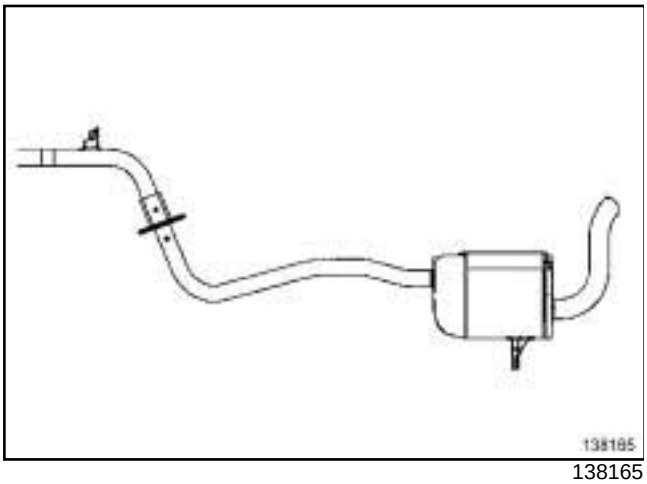

138165

F4R

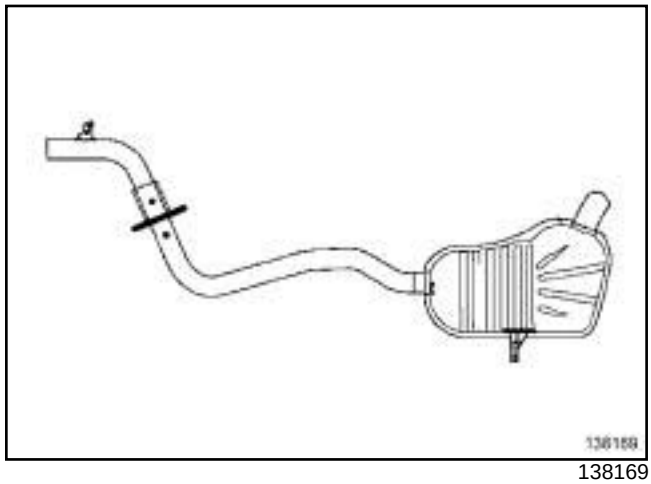

138169

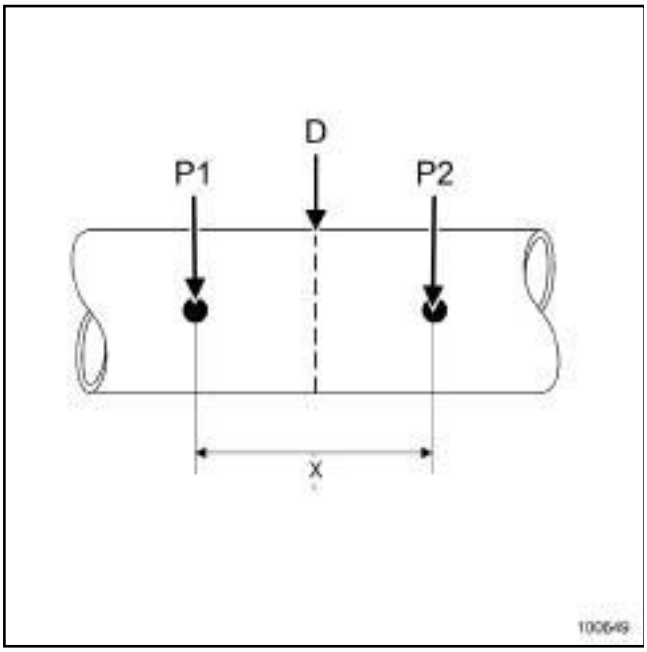

100649

Before cutting the pipe, draw a line (**D**) between the marks (**P1**) and (**P2**) .

The distance (**X**) between the two marks is **80 mm**.

3 - Using tool Mot. 119-01

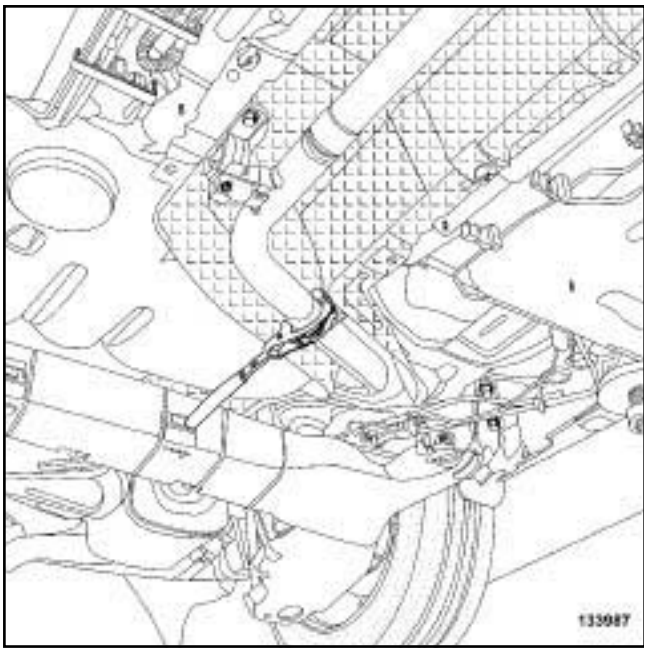

133987

Position the tool on the pipe.

Tighten the two bolts on the cutting tool so that it grips the exhaust pipe.

Turn the cutting tool with the handle while gripping the pipe.

As the cut is made, continue to tighten the two bolts of the tool (do not overtighten the tool against the pipe, to prevent deformation during the cutting operation).

4 - Positioning of the spare part

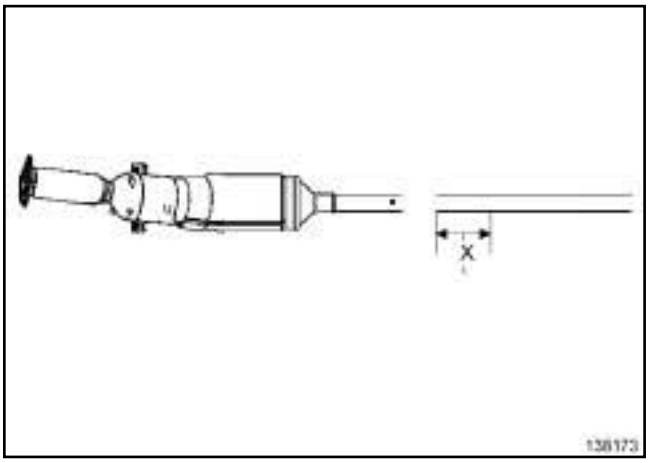

138173

WARNING
When replacing the intermediate section of the exhaust pipe (pipe on diesel versions, expansion chamber on petrol versions), shorten the spare part by **60 mm**.

5 - Fitting the After-Sales sleeve

Exhaust sleeve with one bolt

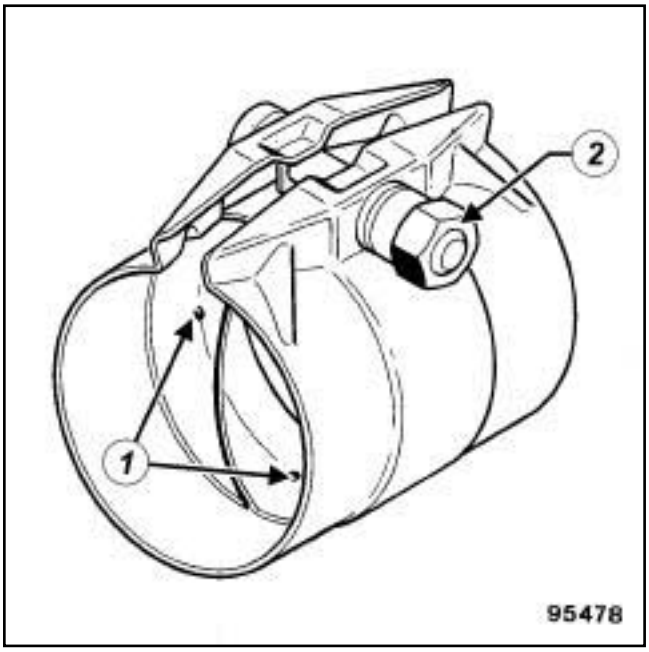

95478

Exhaust sleeve with two bolts

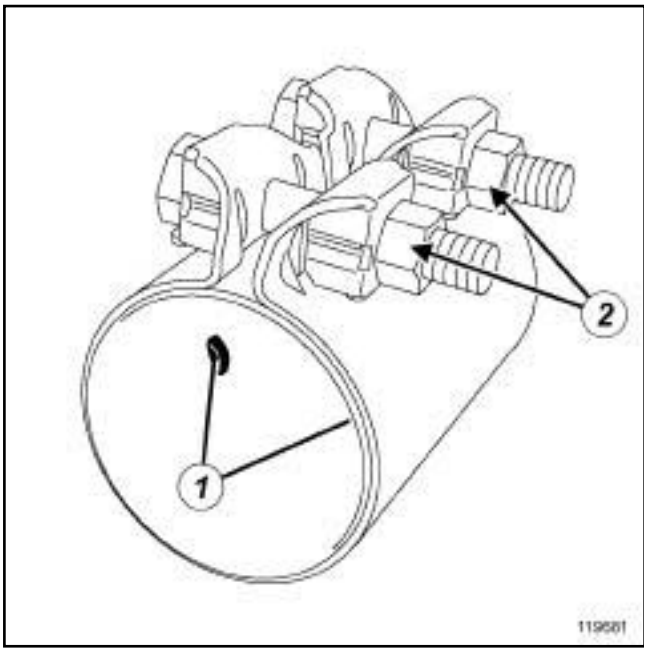

119681

Apply **EXHAUST MASTIC** (see **Vehicle: Parts and ingredients for the repairwork**) (04B, Consumables - Products) inside the sleeve.

To prevent any exhaust leaks, it is important to position the sleeve correctly on both lugs (**1**) .

Place the sleeve on the worn section of the pipe.

Adjust the clamp diameter by tightening the nut slightly.

IMPORTANT

Position the « nut and bolt securing the sleeve » assembly so that the assembly cannot come into contact with the underbody.

Fit the new component.

The clamp nut (**2**) is equipped with a groove to ensure the correct tightening torque.

While tightening, a clicking sound indicates a tightening torque of **25 N.m**.

WARNING

Do not reuse a used clamp.

Note:

Check that the exhaust pipe is not touching the body.

Check that all the heat shields are present.

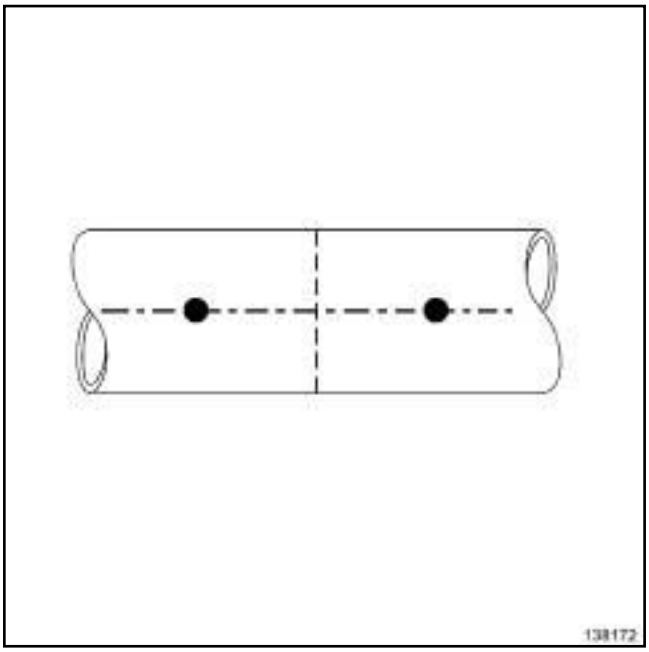

138172

After tightening the sleeve, check that the cutting marks are correctly aligned.

K9K, and 830 or 832

Tightening torques ▽	
turbocharger studs	**9 N.m**
catalytic converter nuts on the turbocharger	**28 N.m**
catalytic converter upstream strut bolts on the cylinder block	**50 N.m**
catalytic converter upstream strut bolts on the catalytic converter	**26 N.m**
lower engine tie-bar bolt on the subframe	**180 N.m**
lower engine tie-bar bolt on the lower engine tie-bar support	**180 N.m**

IMPORTANT
To avoid all risk of damage to the systems, apply the safety and cleanliness instructions and operation recommendations before carrying out any repair (see **19B**, **Exhaust**, **Exhaust: Precautions for repair**, page **19B-12**) .

IMPORTANT
Wear protective gloves during the operation.

IMPORTANT
Wear heat protective gloves during the operation.

IMPORTANT
Catalytic converters contain ceramic fibres, these are contained within a closed unit, and cannot disperse. Drilling or cutting catalytic converters is prohibited.

REMOVAL

I - REMOVAL PREPARATION OPERATION

❑ Position the vehicle on a two-post lift (see **Vehicle: Towing and lifting**) (02A, Lifting equipment).

❑ Disconnect the battery (see **Battery: Removal - Refitting**) (80A, Battery).

❑ Remove:

- the engine cover,
- the engine undertray bolts,
- the engine undertray.

K9K, and 832

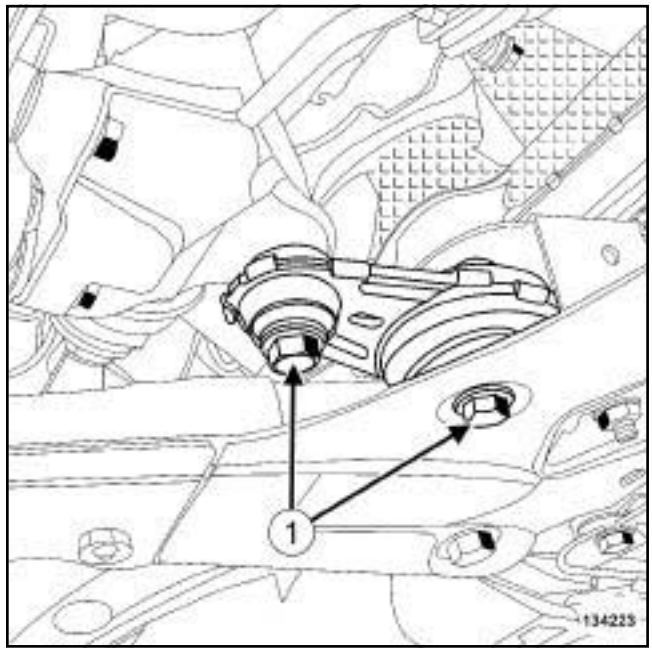

134223

❑ Remove:

- the bolts (**1**) from the lower engine tie-bar,
- the lower engine tie-bar.

K9K, and 830

❑ Remove the lower engine tie-bar (see **19D**, **Engine mounting**, **Lower engine tie-bar: Removal - Refitting**, page **19D-33**) .

K9K, and 830 or 832

II - REMOVAL STAGE FOR THE PART CONCERNED.

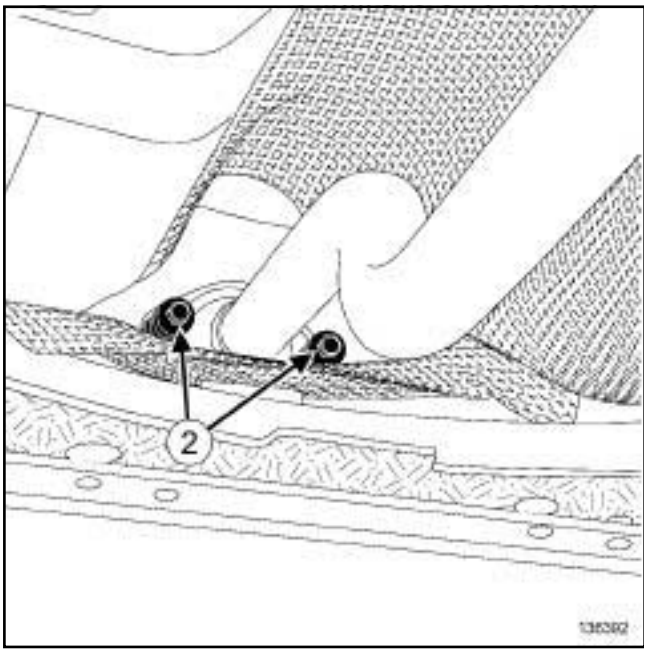

136392

❑ Remove the bolts from the exhaust flange (**2**) fitted with their springs.

❑ Move the exhaust pipe to one side.

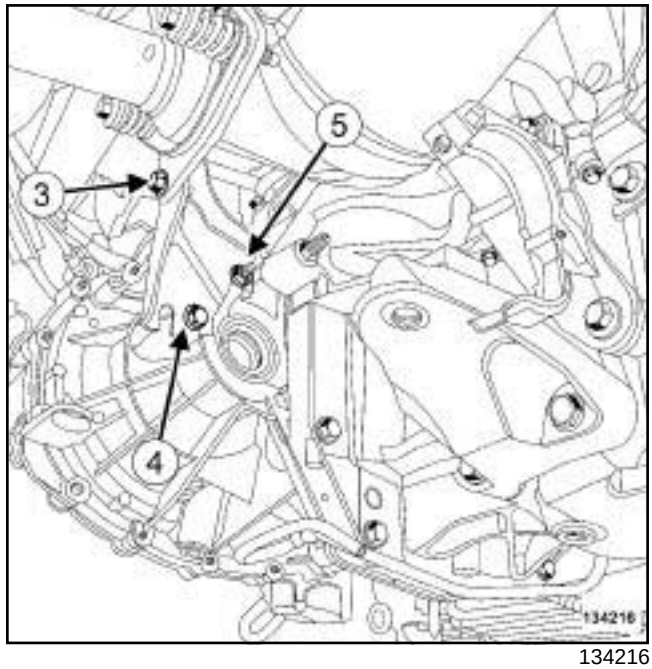

134216

❑ Remove the catalytic converter downstream strut bolt (**3**) from the catalytic converter.

❑ Undo:

- the catalytic converter downstream strut bolt (**4**) on the gearbox,
- the catalytic converter downstream strut nut (**5**) on the gearbox,

❑ Remove the catalytic converter downstream strut by sliding it upwards.

K9K, and 830 or 832

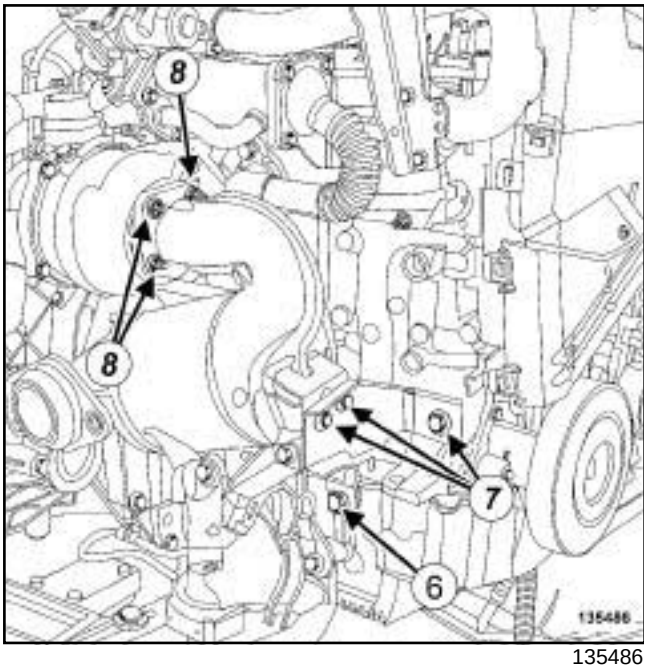

135486

❑ Undo the catalytic converter upstream strut bolt (**6**) .

❑ Remove:

- the catalytic converter upstream strut bolts (**7**) ,
- the catalytic converter upstream strut,
- the catalytic converter nuts (**8**) ,
- the catalytic converter,
- the ring of the catalytic converter exhaust flange,
- the seal between the catalytic converter and the turbocharger.

REFITTING

I - REFITTING PREPARATION OPERATION

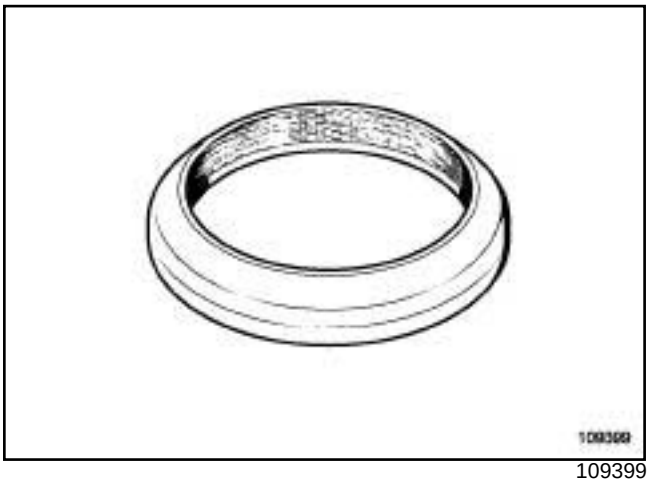

109399

❑ Always replace the ring of the catalytic converter exhaust flange.

❑ **parts always to be replaced: seal between turbocharger and catalytic converter (10,09,01,08)**

❑ Use **ABRASIVE PADS** to clean the joint face:

- the intermediate pipe,
- on the catalytic converter in case of reuse,
- the turbocharger,

❑ Use **SURFACE CLEANER** (see **Vehicle: Parts and ingredients for the repairwork**) (04B, Consumables - Products) and **CLEAN CLOTHS** to degrease the joint face:

- the intermediate pipe,
- on the catalytic converter in case of reuse,
- the turbocharger,

WARNING

To ensure proper sealing, the gasket surfaces must be clean, dry and not greasy (avoid any finger marks).

❑ If replacing the turbocharger studs, torque tighten the **turbocharger studs (9 N.m)**.

K9K, and 830 or 832

II - REFITTING OPERATION FOR PART CONCERNED

❑ Refit:

- a new seal between the catalytic converter and the turbocharger on the turbocharger,
- the catalytic converter,
- the catalytic converter upstream strut.

> Note:
>
> Check that there is no contact between the catalytic converter and the turbocharger oil return pipe during the entire catalytic converter tightening operation.

❑ Fit without tightening:

- the catalytic converter upstream strut bolt on the cylinder block,
- the upstream strut bolt on the sump.

❑ Refit the catalytic converter downstream strut.

❑ Fit without tightening:

- the catalytic converter downstream strut bolt on the gearbox,
- the catalytic converter downstream strut nut on the gearbox,
- the catalytic converter upstream strut bolts on the catalytic converter,
- the catalytic converter downstream strut bolt on the catalytic converter,
- the catalytic converter nuts on the turbocharger.

❑ Tighten to torque:

- the **catalytic converter nuts on the turbocharger (28 N.m)**,
- the **catalytic converter upstream strut bolts on the cylinder block (50 N.m)**.

❑ Tighten:

- the catalytic converter downstream strut bolt on the manual gearbox,
- the catalytic converter downstream strut nut on the manual gearbox.

❑ Torque tighten the **catalytic converter upstream strut bolts on the catalytic converter (26 N.m)**.

❑ Tighten:

- the catalytic converter downstream strut bolt on the catalytic converter,
- the catalytic converter upstream strut bolt on the sump.

❑ Refit a new ring on the catalytic converter exhaust flange.

❑ Fit the exhaust pipe on the catalytic converter.

❑ Refit the exhaust bracket bolts fitted with their springs.

III - FINAL OPERATION

K9K, and 832

❑ Refit the lower engine tie-bar.

❑ Tighten to torque:

- the **lower engine tie-bar bolt on the subframe (180 N.m)**,
- the **lower engine tie-bar bolt on the lower engine tie-bar support (180 N.m)**.

K9K, and 830

❑ Refit the lower engine tie-bar (see **19D**, **Engine mounting**, **Lower engine tie-bar: Removal - Refitting**, page **19D-33**) .

❑ Refit:

- the engine undertray,
- the engine cover.

❑ Connect the battery (see **Battery : Removal - Refitting**) (80A, Battery).

K4M

Essential equipment
component jack

IMPORTANT
To avoid all risk of damage to the systems, apply the safety and cleanliness instructions and operation recommendations before carrying out any repair (see **19B**, **Exhaust**, **Exhaust: Precautions for repair**, page **19B-12**) .

IMPORTANT
Wear heat protective gloves during the operation.

IMPORTANT
Catalytic converters contain ceramic fibres, these are contained within a closed unit, and cannot disperse. Drilling or cutting catalytic converters is prohibited.

WARNING
To prevent the surrounding components from overheating, do not damage (tear, pierce, bend, etc.) a heat shield.

Any damaged heat shields must be replaced.

REMOVAL

I - REMOVAL PREPARATION OPERATION

❑ Position the vehicle on a two-post lift (see **Vehicle: Towing and lifting**) (02A, Lifting equipment).

❑ Disconnect the battery (see **Battery: Removal - Refitting**) (80A, Battery).

❑ Remove:

- the downstream oxygen sensor (see **17B**, **Petrol injection**, **Oxygen sensors: Removal - Refitting**, page **17B-1**) ,
- the engine undertray bolts,
- the engine undertray.

II - OPERATION FOR REMOVAL OF PART CONCERNED

❑ Cut the exhaust pipe (see **19B**, **Exhaust**, **Exhaust: Precautions for repair**, page **19B-12**) in the designated area to be cut (see **19B**, **Exhaust**, **Exhaust: Parts and consumables for the repair work**, page **19B-1**) .

Note:

Put a **component jack** under the catalytic converter.

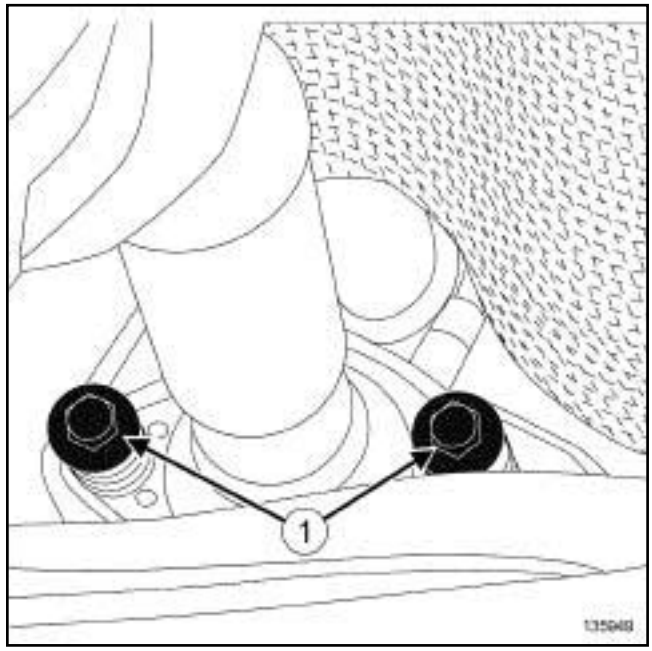

135949

❑ Remove:

- the bolts (**1**) from the exhaust bracket,
- the catalytic converter,
- the exhaust bracket ring.

IMPORTANT
Catalytic converters contain ceramic fibres, these are contained within a closed unit, and cannot disperse. Drilling or cutting catalytic converters is prohibited.

REFITTING

I - REFITTING PREPARATION OPERATION

❑ Clean the bearing faces of the catalytic converter using **ABRASIVE PADS** (see **Vehicle: Parts and ingredients for the repairwork**) (04B, Consumables - Products).

K4M

- Degrease the bearing faces of the catalytic converter using **SURFACE CLEANER** and clean cloths (see **Vehicle: Parts and ingredients for the repairwork**) (04B, Consumables - Products).

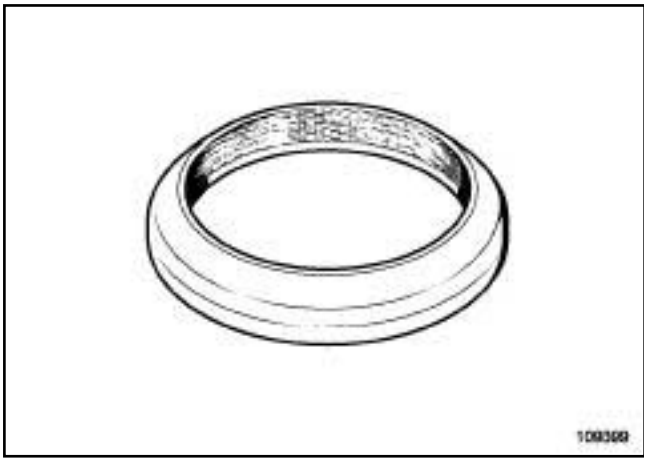

109399

- **parts always to be replaced: ring between exhaust manifold and catalytic converter (10,08,02, 20)**.
- Position a new after sales sleeve on the catalytic converter (see **19B**, **Exhaust**, **Exhaust: Precautions for repair**, page **19B-12**) .

> **IMPORTANT**
> Position the « nut and bolt securing the sleeve » assembly so that the assembly cannot come into contact with the underbody.

II - REFITTING OPERATION FOR PART CONCERNED

- Refit:
  - a new ring between the exhaust manifold and the catalytic converter,
  - the catalytic converter,
  - the exhaust flange bolts.
- Tighten the sleeve bolts while guiding the exhaust pipe to ensure correct alignment.

III - FINAL OPERATION

- Refit:
  - the downstream oxygen sensor (see **17B**, **Petrol injection**, **Oxygen sensors: Removal - Refitting**, page **17B-1**) ,
  - the engine undertray.
- Connect the battery (see **Battery: Removal - Refitting**) (80A, Battery).
- Check:
  - that all the exhaust pipe heat shields are in place and properly attached.
  - that there is no contact with the underbody.
- Start the vehicle.
- Check that there are no leaks and deal with them if necessary.

Catalytic converter: Removal - Refitting

F9Q, and 870

- The catalytic converter is not sold separately in the Parts Department. To replace it, the particle filter must be replaced (see **19B**, **Exhaust**, **Particle filter: Removal - Refitting**, page **19B-47**) .

F9Q, and 872

IMPORTANT
To avoid all risk of damage to the systems, apply the safety and cleanliness instructions and operation recommendations before carrying out any repair (see **19B**, **Exhaust**, **Exhaust: Precautions for repair**, page **19B-12**) .

WARNING
To prevent the surrounding components from overheating, do not damage (tear, pierce, bend, etc.) a heat shield.

Any damaged heat shields must be replaced.

IMPORTANT
Wear heat protective gloves during the operation.

REMOVAL

I - REMOVAL PREPARATION OPERATION

❏ Position the vehicle on a two-post lift (see **Vehicle: Towing and lifting**) (02A, Lifting equipment).

❏ Remove:

- the engine undertray bolts,
- the engine undertray.

II - OPERATION FOR REMOVAL OF PART CONCERNED

❏ Cut the exhaust pipe (see **19B**, **Exhaust**, **Exhaust: Precautions for repair**, page **19B-12**) in the designated area to be cut (see **19B**, **Exhaust**, **Exhaust: Parts and consumables for the repair work**, page **19B-1**) .

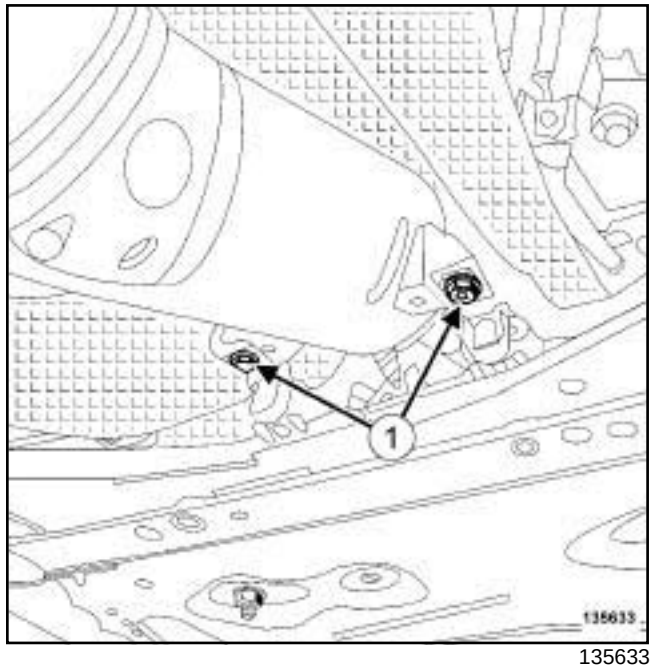

135633

❏ Remove the bolts (**1**) from the catalytic converter.

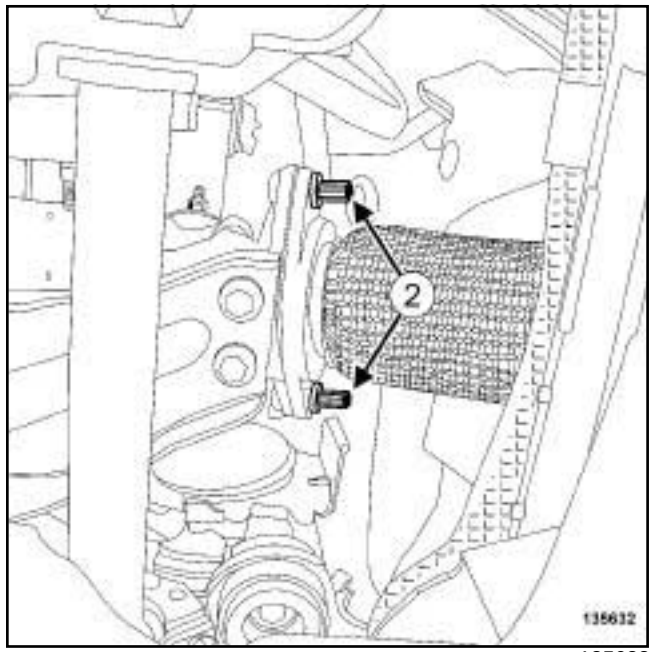

135632

❏ Remove:

- the nuts (**2**) from the exhaust flange,
- the catalytic converter,
- the exhaust flange seal.

REFITTING

I - REFITTING PREPARATION OPERATION

❏ Always replace the exhaust bracket seal.

F9Q, and 872

II - REFITTING OPERATION FOR PART CONCERNED

❏ Refit:

- a new exhaust flange seal,
- the catalytic converter.

> **IMPORTANT**
> Position the « nut and bolt securing the sleeve » assembly so that the assembly cannot come into contact with the underbody.

❏ Fit a new After-Sales sleeve (see **19B**, **Exhaust**, **Exhaust: Precautions for repair**, page **19B-12**) .

III - FINAL OPERATION

❏ Check:

- that there is no contact with the underbody,
- that all the exhaust pipe heat shields are in place.

❏ Start the vehicle.

❏ Check that there are no leaks.

❏ Refit the engine undertray.

F4R

Tightening torques ▽	
catalytic converter studs on the turbocharger	**9 N.m**
catalytic converter upstream strut bolts on the catalytic converter	**11 Nm**
catalytic converter upper bracket bolt on the catalytic converter	**11 N.m**
catalytic converter nuts	**40 N.m**
catalytic converter strut bolt	**8 N.m**
catalytic converter strut nut	**44 N.m**
driveshaft relay bearing bolts	**44 N.m**
engine tie-bar support bolts	**62 N.m**

IMPORTANT
Catalytic converters contain ceramic fibres, these are contained within a closed unit, and cannot disperse. Drilling or cutting catalytic converters is prohibited.

IMPORTANT
Wear protective gloves during the operation.

REMOVAL

I - REMOVAL PREPARATION OPERATION

❑ Position the vehicle on a two-post lift (see **Vehicle: Towing and lifting**) (02A, Lifting equipment).

❑ Disconnect the battery (see **Battery: Removal - Refitting**) (80A, Battery).

❑ Remove:

- the engine cover,
- the engine undertray bolts,
- the engine undertray,
- the windscreen wiper arms (see **Windscreen wiper arm: Removal - Refitting**) (85A, Wiping - Washing),
- the scuttle panel grille (see **Scuttle panel grille: Removal - Refitting**) (56A, Exterior equipment),
- the scoop under the scuttle panel grille (see **Scoop under scuttle panel grille: Removal - Refitting**) (56A, Exterior equipment).

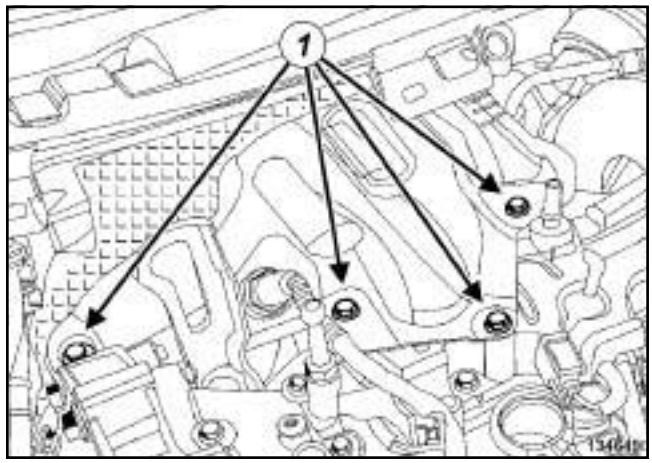

134649

❑ Remove:

- the bolts (**1**) from the turbocharger heat shield,
- the turbocharger heat shield,
- the upstream oxygen sensor (see **17B**, **Petrol injection**, **Oxygen sensors: Removal - Refitting**, page **17B-1**) .

F4R

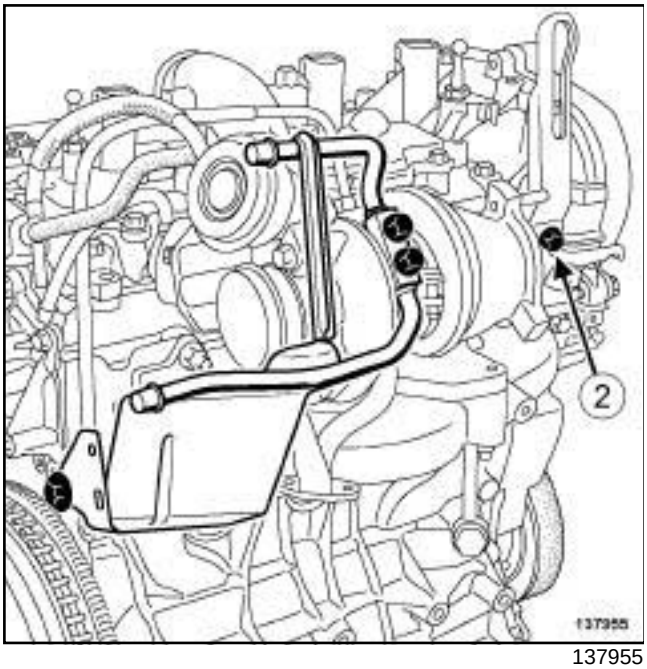

137955

❑ Remove:

- the timing end lifting eye bolt (**2**) ,
- the lifting eye on the timing end,
- the front right-hand wheel (see **Wheel: Removal - Refitting**) (35A, Wheels and tyres),
- the front section of the front right-hand wheel arch liner (see **Front wheel arch liner: Removal - Refitting**) (55A, Exterior protection).

❑ Drain the manual gearbox (see **Manual gearbox oil: Draining - Refilling**) (21A, Manual gearbox).

❑ Remove:

- the front right-hand wheel driveshaft (see **Front right-hand wheel driveshaft: Removal - Refitting**) (29A, Driveshafts),
- the right-hand differential output seal (see **Differential output seal: Removal - Refitting**) (21A, Manual gearbox),
- the lower engine tie-bar (see **19D**, **Engine mounting**, **Lower engine tie-bar: Removal - Refitting**, page **19D-33**) ,
- the connecting hose (see **19B**, **Exhaust**, **Connecting hose: Removal - Refitting**, page **19B-60**) .

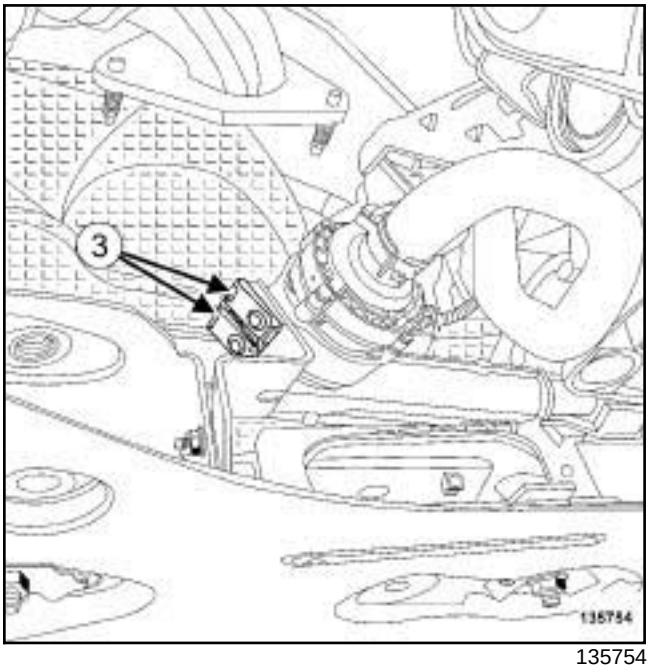

135754

❑ Remove the clips (**3**) from the electric coolant pump.

❑ Move aside the electric water pump.

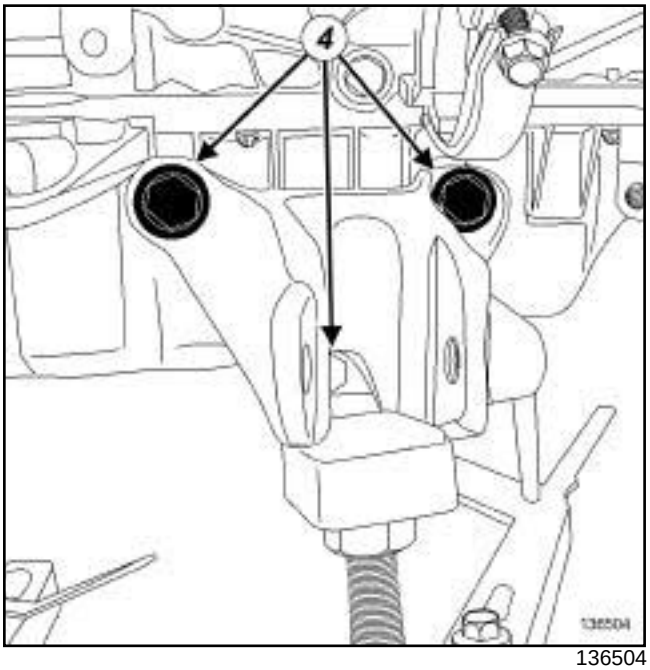

136504

❑ Remove:

- the lower engine tie-bar mounting bolts (**4**) ,
- the lower engine tie-bar support.

F4R

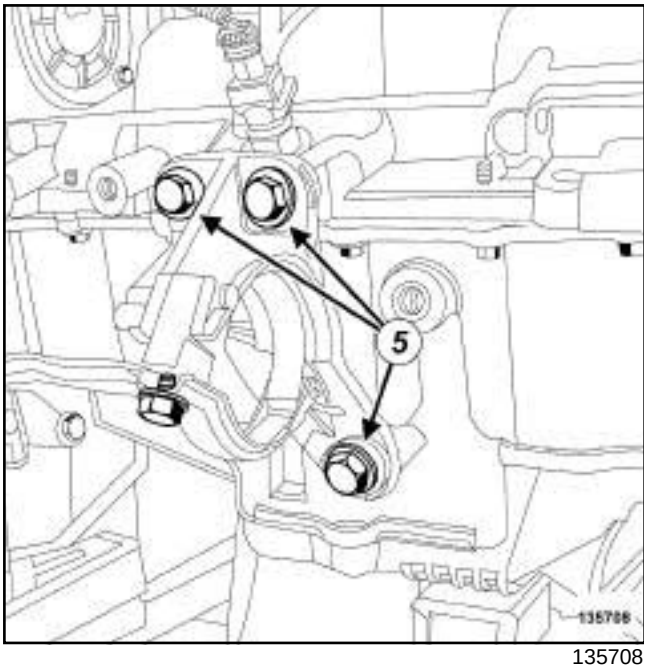

135708

❑ Remove:

- the bolts (**5**) from the driveshaft relay bearing,
- the driveshaft relay bearing.

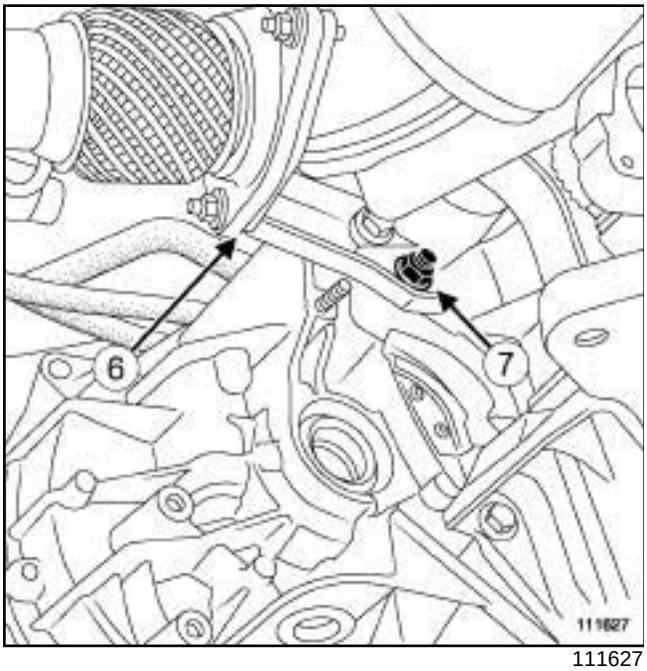

111627

❑ Remove

- the bolt (**6**) from the catalytic converter strut,
- the catalytic converter strut nut (**7**) ,
- the catalytic converter strut.

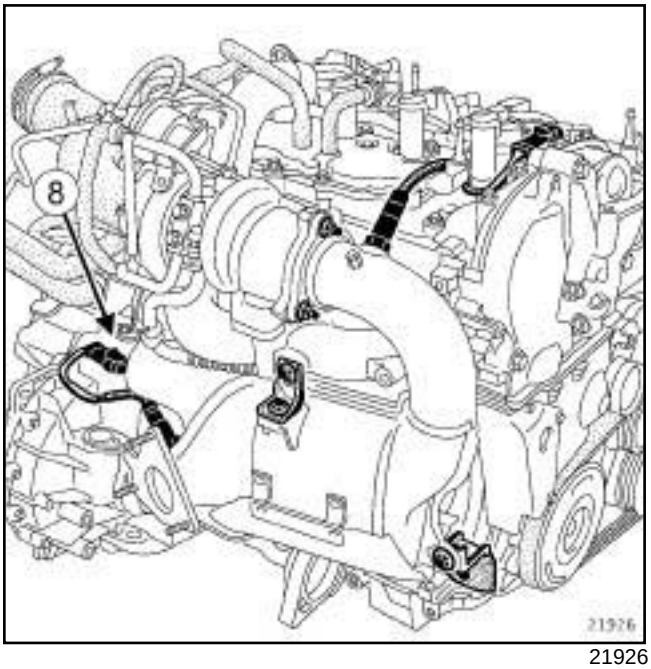

21926

❑ Disconnect the downstream oxygen sensor connector (**8**) .

❑ Unclip the downstream oxygen sensor wiring.

II - OPERATION FOR REMOVAL OF PART CONCERNED

If replacing the catalytic converter

❑ Remove the downstream oxygen sensor (see **17B**, **Petrol injection**, **Oxygen sensors: Removal - Refitting**, page **17B-1**) .

F4R

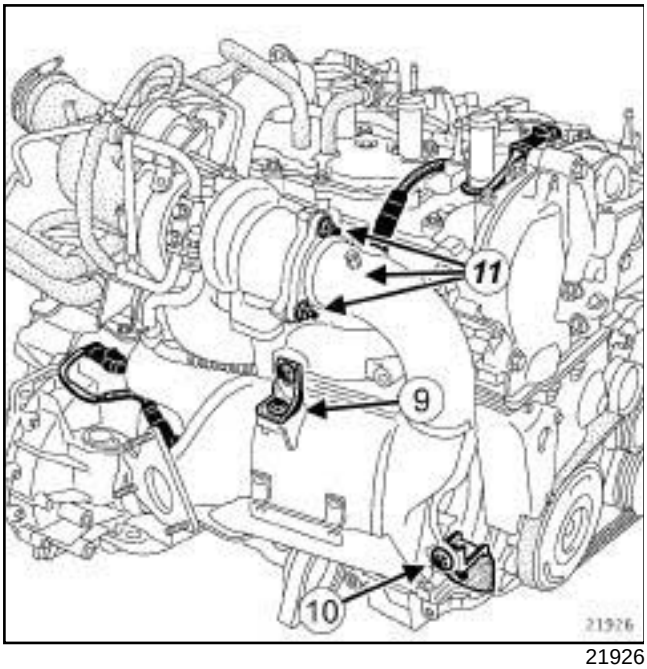

21926

❑ Remove:

- the bolt (**9**) from the catalytic converter upper bracket on the catalytic converter,
- the bolt (**10**) from the upstream strut of the catalytic converter on the catalytic converter,
- the catalytic converter nuts (**11**) ,
- the catalytic converter,
- the seal between the catalytic converter and the turbocharger.

REFITTING

I - REFITTING PREPARATION OPERATION

❑ **parts always to be replaced: seal between turbocharger and catalytic converter (10,09,01,08)**.

❑ **parts always to be replaced: catalytic converter stud on the turbocharger (if loosened) (10,09,01, 04)**.

Note:

If a stud loosens during removal, coat it with **HIGH RESISTANCE THREADLOCK** (see **Vehicle: Parts and ingredients for the repairwork**) (04B, Consumables - Products).

Torque tighten the **catalytic converter studs on the turbocharger (9 N.m)**.

WARNING

To prevent the surrounding components from overheating, do not damage (tear, pierce, bend, etc.) a heat shield.

Any damaged heat shields must be replaced.

If replacing the catalytic converter

❑ Remove the downstream oxygen sensor (see **17B**, **Petrol injection**, **Oxygen sensors: Removal - Refitting**, page **17B-1**) .

II - REFITTING OPERATION FOR PART CONCERNED

❑ Refit:

- a new seal between the turbocharger and the catalytic converter,
- the catalytic converter.

❑ Fit without tightening:

- the catalytic converter upper bracket bolt on the catalytic converter,
- the catalytic converter nuts,
- the catalytic converter upstream strut bolt on the catalytic converter.

❑ Tighten to torque:

- the **catalytic converter upstream strut bolts on the catalytic converter (11 Nm)**,
- the **catalytic converter upper bracket bolt on the catalytic converter (11 N.m)**,
- the **catalytic converter nuts (40 N.m)**.

III - FINAL OPERATION

❑ Clip on the downstream oxygen sensor wiring.

❑ Connect the downstream oxygen sensor connector.

F4R

❏ Refit:

- the connecting hose (see **19B**, **Exhaust**, **Connecting hose: Removal - Refitting**, page **19B-60**) ,
- the catalytic converter strut.

❏ Fit without tightening:

- the catalytic converter strut nut,
- the catalytic converter strut bolt.

❏ Tighten to torque:

- the **catalytic converter strut bolt (8 N.m)**,
- the **catalytic converter strut nut (44 N.m)**.

❏ Refit the driveshaft relay bearing.

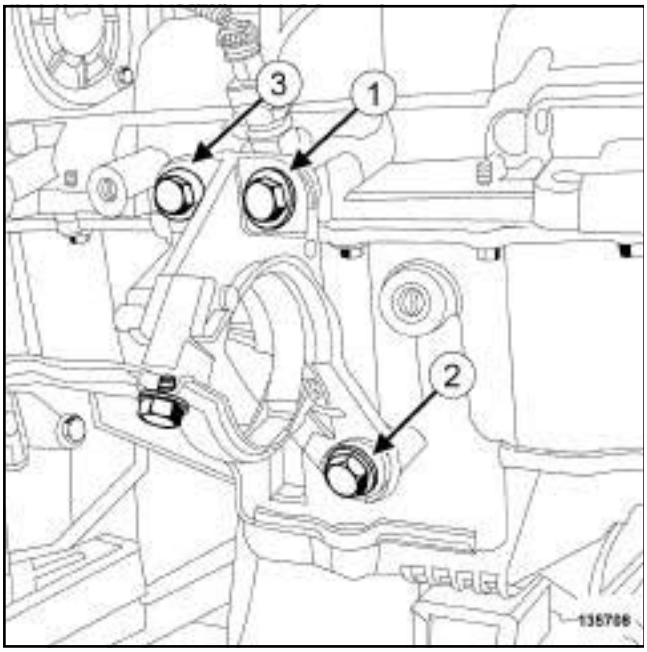

135708

❏ Fit the driveshaft relay bearing bolt (**3**) without tightening it.

❏ Torque tighten in order the **driveshaft relay bearing bolts (44 N.m)**.

❏ Refit:

- the lower engine tie-bar support,
- the engine tie-bar support bolts.

❏ Torque tighten the **engine tie-bar support bolts (62 N.m)**.

❏ Fit the electric coolant pump.

❏ Refit:

- the electric coolant pump clips,
- the lower engine tie-bar (see **19D**, **Engine mounting**, **Lower engine tie-bar: Removal - Refitting**, page **19D-33**) ,
- a new right-hand differential output seal (see **Differential output seal: Removal - Refitting**) (21A, Manual gearbox),
- the front right-hand wheel driveshaft (see **Front right-hand wheel driveshaft: Removal - Refitting**) (29A, Driveshafts).

❏ Fill the manual gearbox (see **Manual gearbox oil: Draining - Refilling**) (21A, Manual gearbox).

❏ Refit:

- the front section of the front right-hand wheel arch liner (see **Front wheel arch liner: Removal - Refitting**) (55A, Exterior protection),
- the front right-hand wheel (see **Wheel: Removal - Refitting**) (35A, Wheels and tyres),
- the lifting eye on the timing end,
- the upstream oxygen sensor (see **17B**, **Petrol injection**, **Oxygen sensors: Removal - Refitting**, page **17B-1**) ,
- the turbocharger heat shield,
- the scoop under the scuttle panel grille (see **Scoop under scuttle panel grille: Removal - Refitting**) (56A, Exterior equipment),
- the scuttle panel grille (see **Scuttle panel grille: Removal - Refitting**) (56A, Exterior equipment),
- the windscreen wiper arms (see **Windscreen wiper arm: Removal - Refitting**) (85A, Wiping - Washing),
- the engine undertray,
- the engine cover.

❏ Connect the battery (see **Battery : Removal - Refitting**) (80A, Battery).

F4R

Essential equipment
component jack

IMPORTANT

To avoid all risk of damage to the systems, apply the safety and cleanliness instructions and operation recommendations before carrying out any repair (see **19B**, **Exhaust**, **Exhaust: Precautions for repair**, page **19B-12**)

WARNING

To prevent the surrounding components from overheating, do not damage (tear, pierce, bend, etc.) a heat shield.

Any damaged heat shields must be replaced.

IMPORTANT

Wear heat protective gloves during the operation.

REMOVAL

I - REMOVAL PREPARATION OPERATION

- ❑ Position the vehicle on a two-post lift (see **Vehicle: Towing and lifting**) (02A, Lifting equipment).
- ❑ Place a **component jack** under the expansion chamber.

II - OPERATION FOR REMOVAL OF PART CONCERNED

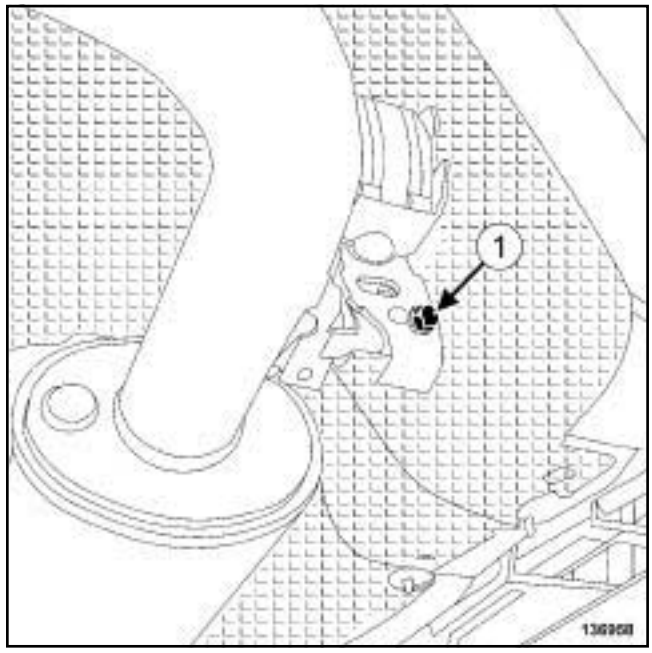

136958

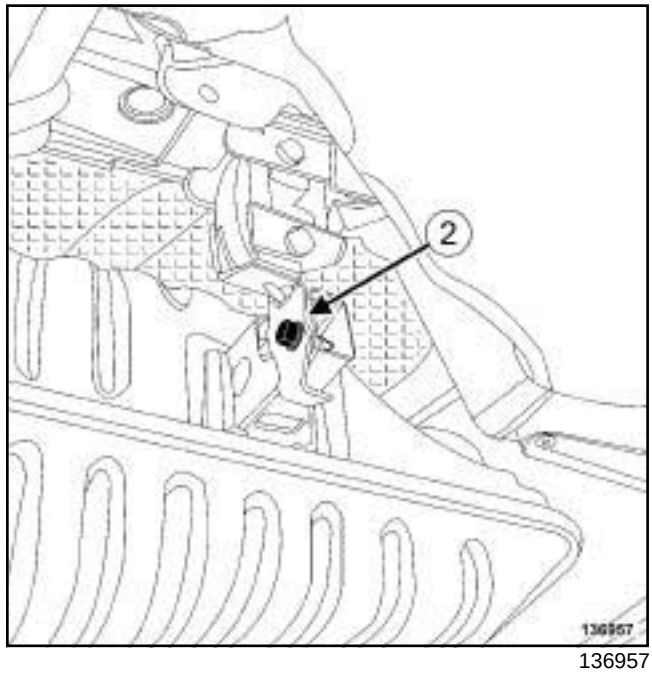

136957

- ❑ Remove:
  - the expansion chamber bolt (**1**) ,
  - the exhaust silencer bolt (**2**) .
- ❑ Cut the exhaust pipe (see **19B**, **Exhaust**, **Exhaust: Precautions for repair**, page **19B-12**) in the designated area to be cut (see **19B**, **Exhaust**, **Exhaust: Parts and consumables for the repair work**, page **19B-1**) .
- ❑ Remove the expansion chamber.

F4R

REFITTING

I - OPERATION FOR REFITTING PART CONCERNED

❏ Refit the expansion chamber using a **component jack**.

> **IMPORTANT**
> Position the « nut and bolt securing the sleeve » assembly so that the assembly cannot come into contact with the underbody.

❏ Fit new after-sales sleeves (see **19B**, **Exhaust**, **Exhaust: Precautions for repair**, page **19B-12**) .

❏ Refit:

- the expansion chamber bolt,
- the exhaust silencer bolt.

II - FINAL OPERATION

❏ Check:

- that all the exhaust pipe heat shields are in place and properly attached.
- that there is no contact with the underbody,
- that there are no leaks.

K4M

Essential equipment
component jack

IMPORTANT
To avoid all risk of damage to the systems, apply the safety and cleanliness instructions and operation recommendations before carrying out any repair (see **19B**, **Exhaust**, **Exhaust: Precautions for repair**, page **19B-12**) .

WARNING
To prevent the surrounding components from overheating, do not damage (tear, pierce, bend, etc.) a heat shield.

Any damaged heat shields must be replaced.

IMPORTANT
Wear heat protective gloves during the operation.

REMOVAL

I - REMOVAL PREPARATION OPERATION

❑ Position the vehicle on a two-post lift (see **Vehicle: Towing and lifting**) (02A, Lifting equipment).

II - OPERATION FOR REMOVAL OF PART CONCERNED

❑ Cut the exhaust system (see **19B**, **Exhaust**, **Exhaust: Precautions for repair**, page **19B-12**) in the cutting zone provided for this purpose on either side of the expansion chamber (see **19B**, **Exhaust**, **Exhaust: Parts and consumables for the repair work**, page **19B-1**) .

Note:
Place a **component jack** under the expansion chamber.

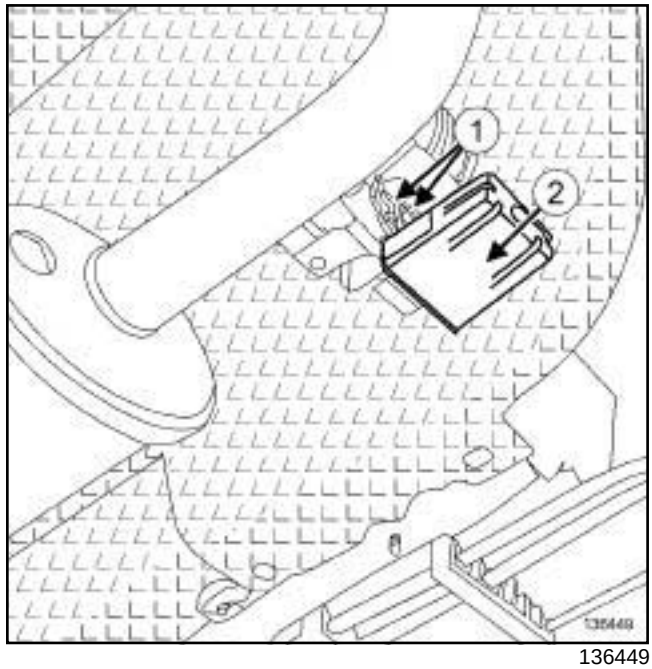

136449

❑ Remove the bolts (**1**) of the rubber mounting bush on the expansion chamber.

Note:
If the rubber mounting bushes are damaged, replace them.

❑ Remove:

- the earth on the rubber mounting bush (**2**) ,
- the expansion chamber.

III - REFITTING OPERATION FOR PART CONCERNED

❑ Refit:

- the expansion chamber,
- the earth on the rubber mounting bush,
- the bolts of the rubber mounting bush on the expansion chamber.

❑ Fit new after-sales sleeves (see **19B**, **Exhaust**, **Exhaust: Precautions for repair**, page **19B-12**) .

IMPORTANT
Position the « nut and bolt securing the sleeve » assembly so that the assembly cannot come into contact with the underbody.

❑ Tighten the sleeves while supporting the exhaust pipe to ensure they are aligned.

K4M

IV - FINAL OPERATION

❏ Check:

- that there is no contact with the underbody,
- all the exhaust pipe heat shields are in place and properly attached.

❏ Start the vehicle.

❏ Check that there are no leaks and deal with them if necessary.

K9K, and 830 or 832

IMPORTANT
To avoid all risk of damage to the systems, apply the safety and cleanliness instructions and operation recommendations before carrying out any repair (see **19B**, **Exhaust**, **Exhaust: Precautions for repair**, page **19B-12**) .

WARNING
To prevent the surrounding components from overheating, do not damage (tear, pierce, bend, etc.) a heat shield.

Any damaged heat shields must be replaced.

IMPORTANT
Wear heat protective gloves during the operation.

REMOVING THE CONNECTING PIPE

I - PREPARATION OPERATION FOR REMOVAL OF THE CONNECTING PIPE

❑ Position the vehicle on a two-post lift (see **Vehicle: Towing and lifting**) (02A, Lifting equipment).

❑ Cut the exhaust system (see **Vehicle: Precautions for repair**) in the cutting zone provided for this purpose on either side of the connecting pipe (see **19B**, **Exhaust**, **Exhaust: Parts and consumables for the repair work**, page **19B-1**) .

II - CONNECTING PIPE REMOVAL OPERATION

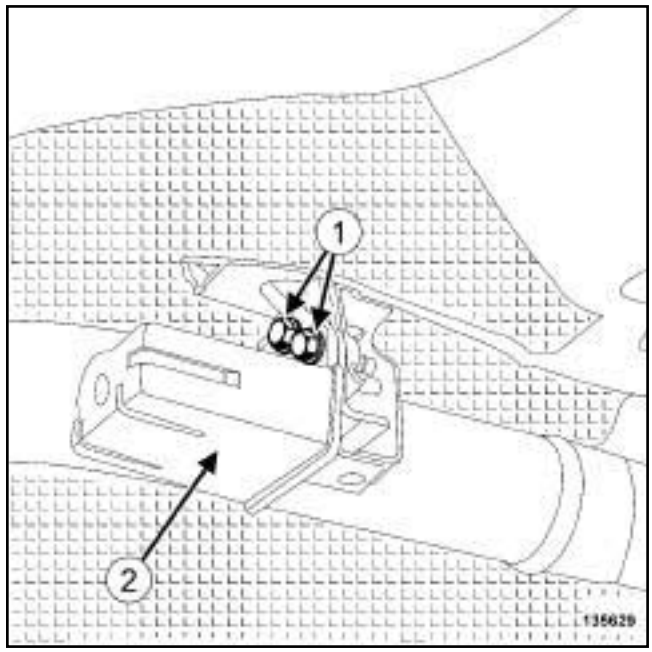

135629

❑

Note:
If the rubber mounting bush is damaged, it must always be replaced.

❑ Remove:

- the connecting pipe bolts (**1**) ,
- the connecting pipe balance weight (**2**) ,
- the connecting pipe.

REFITTING THE CONNECTING PIPE

I - CONNECTING PIPE REFITTING OPERATION

❑ Refit the connecting pipe equipped with the connecting pipe balance weight.

II - FINAL OPERATION

❑

IMPORTANT
Position the « nut and bolt securing the sleeve » assembly so that the assembly cannot come into contact with the underbody.

❑ Fit new after-sales sleeves (see **19B**, **Exhaust**, **Exhaust: Precautions for repair**, page **19B-12**) .

❑ Check:

- that there is no contact with the underbody,

K9K, and 830 or 832

- the presence and correct positioning of all the exhaust pipe heat shields.

❑ Start the vehicle.

❑ Check that there are no leaks and deal with them if necessary.

REMOVING THE EXHAUST DOWNPIPE

I - PREPARATION OPERATION FOR REMOVAL OF THE EXHAUST DOWNPIPE

❑ Position the vehicle on a two-post lift (see **Vehicle: Towing and lifting**) (02A, Lifting equipment).

❑ Cut the exhaust system (see **Vehicle: Precautions for repair**) in the cutting zone provided for this purpose on either side of the connecting pipe (see **19B**, **Exhaust**, **Exhaust: Parts and consumables for the repair work**, page **19B-1**) .

II - EXHAUST DOWNPIPE REMOVAL OPERATION

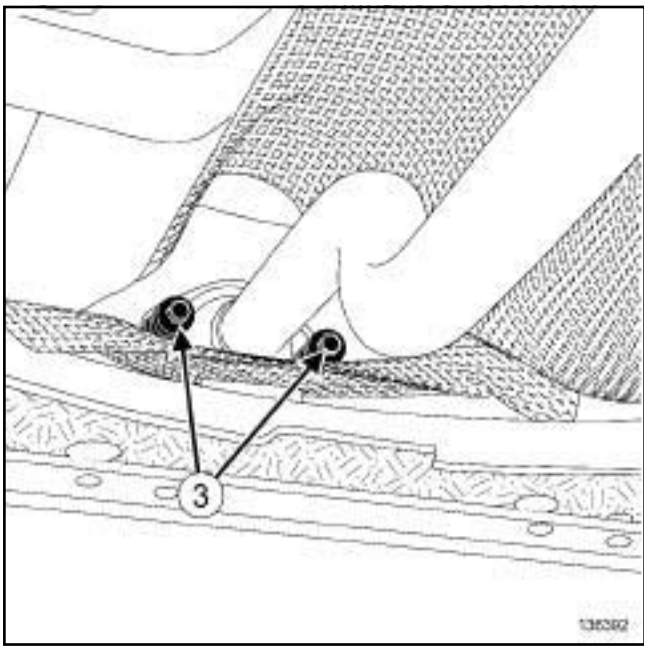

136392

❑ Remove:

- the exhaust downpipe bolts (**3**) from the catalytic converter,
- the sealing ring of the catalytic converter exhaust flange,
- the exhaust downpipe.

REFITTING THE EXHAUST DOWNPIPE

I - PREPARATION OPERATION FOR REFITTING THE EXHAUST DOWNPIPE

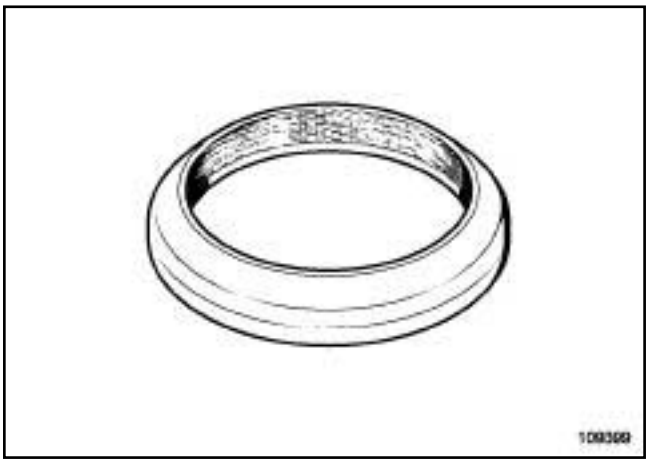

109399

❑ Always replace the catalytic converter exhaust flange sealing ring.

❑ Clean the bearing face of the exhaust downpipe using **SURFACE CLEANER** (see **Vehicle: Parts and ingredients for the repairwork**) (04B, Consumables - Products).

II - EXHAUST DOWNPIPE REFITTING OPERATION

❑ Refit:

- the new sealing ring of the catalytic converter exhaust flange,
- the exhaust downpipe.

❑ Fit the exhaust downpipe bolts onto the catalytic converter, without tightening.

III - FINAL OPERATION

❑

> **IMPORTANT**
> Position the « nut and bolt securing the sleeve » assembly so that the assembly cannot come into contact with the underbody.

❑ Fit a new After-Sales sleeve (see **19B**, **Exhaust**, **Exhaust: Precautions for repair**, page **19B-12**) .

❑ Tighten the exhaust downpipe bolts on the catalytic converter.

❑ Check:

- that there is no contact with the underbody,
- the presence and correct positioning of all the exhaust pipe heat shields.

K9K, and 830 or 832

- ❑ Start the vehicle.
- ❑ Check that there are no leaks and deal with them if necessary.

F9Q

IMPORTANT
To avoid all risk of damage to the systems, apply the safety and cleanliness instructions and operation recommendations before carrying out any repair (see **19B**, **Exhaust**, **Exhaust: Precautions for repair**, page **19B-12**) .

WARNING
To prevent the surrounding components from overheating, do not damage (tear, pierce, bend, etc.) a heat shield.

Any damaged heat shields must be replaced.

IMPORTANT
Wear heat protective gloves during the operation.

REMOVAL

I - REMOVAL PREPARATION OPERATION

❑ Position the vehicle on a two-post lift (see **Vehicle: Towing and lifting**) (02A, Lifting equipment).

II - OPERATION FOR REMOVAL OF PART CONCERNED

❑ Cut the exhaust pipe (see **19B**, **Exhaust**, **Exhaust: Precautions for repair**, page **19B-12**) in the designated area to be cut (see **19B**, **Exhaust**, **Exhaust: Parts and consumables for the repair work**, page **19B-1**) .

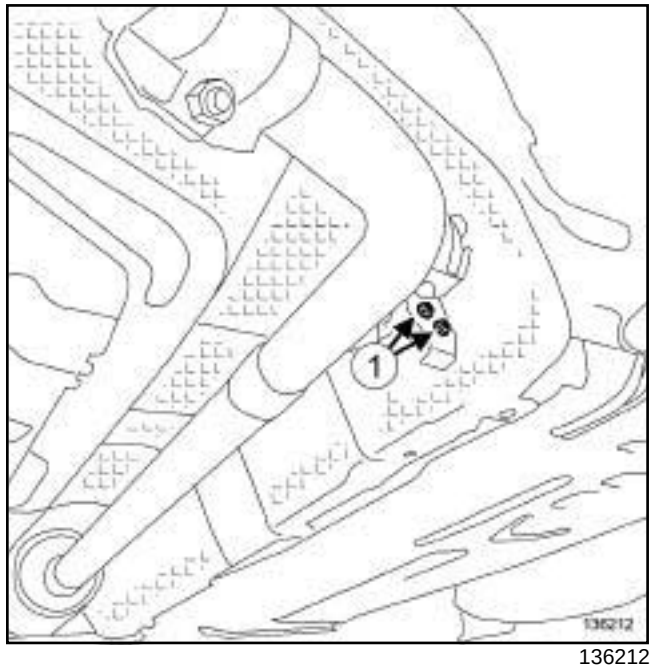

136212

❑

Note:
If the rubber mounting bush is damaged, it must always be replaced.

❑ Remove:

- the connecting pipe bolts (**1**) ,
- the balance weight of the connecting pipe,
- the connecting pipe.

REFITTING

I - REFITTING OPERATION FOR PART CONCERNED

❑ Refit the connecting pipe equipped with the connecting pipe balance weight.

IMPORTANT
Position the « nut and bolt securing the sleeve » assembly so that the assembly cannot come into contact with the underbody.

❑ Fit new after-sales sleeves (see **19B**, **Exhaust**, **Exhaust: Precautions for repair**, page **19B-12**) .

II - FINAL OPERATION

❑ Check:

- that there is no contact with the underbody,

F9Q

- that all exhaust pipe heat shields are present.

❏ Start the vehicle.

❏ Check that there are no leaks.

F4R

Essential equipment
component jack

IMPORTANT
To avoid all risk of damage to the systems, apply the safety and cleanliness instructions and operation recommendations before carrying out any repair (see **19B**, **Exhaust**, **Exhaust: Precautions for repair**, page **19B-12**) .

IMPORTANT
Wear heat protective gloves during the operation.

WARNING
To prevent the surrounding components from overheating, do not damage (tear, pierce, bend, etc.) a heat shield.

Any damaged heat shields must be replaced.

REMOVAL

I - REMOVAL PREPARATION OPERATION

❑ Position the vehicle on a two-post lift (see **Vehicle: Towing and lifting**) (02A, Lifting equipment).

II - OPERATION FOR REMOVAL OF PART CONCERNED

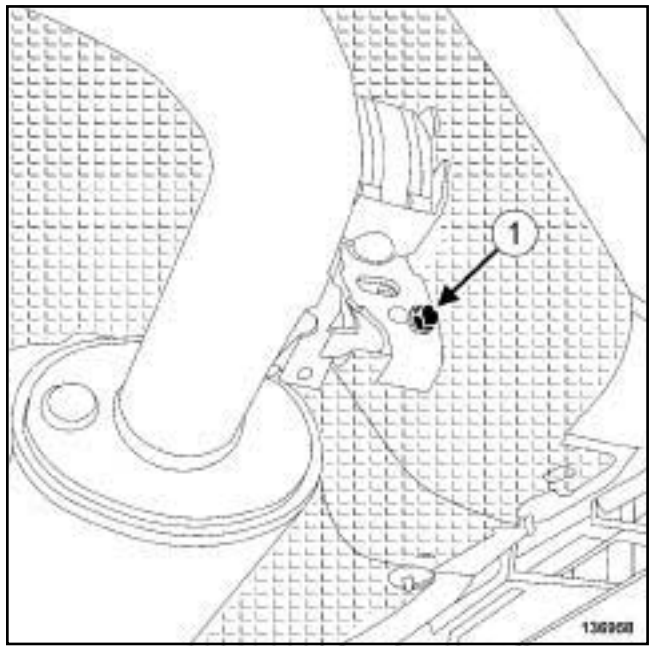

136958

❑ Remove the expansion chamber bolt (**1**) .

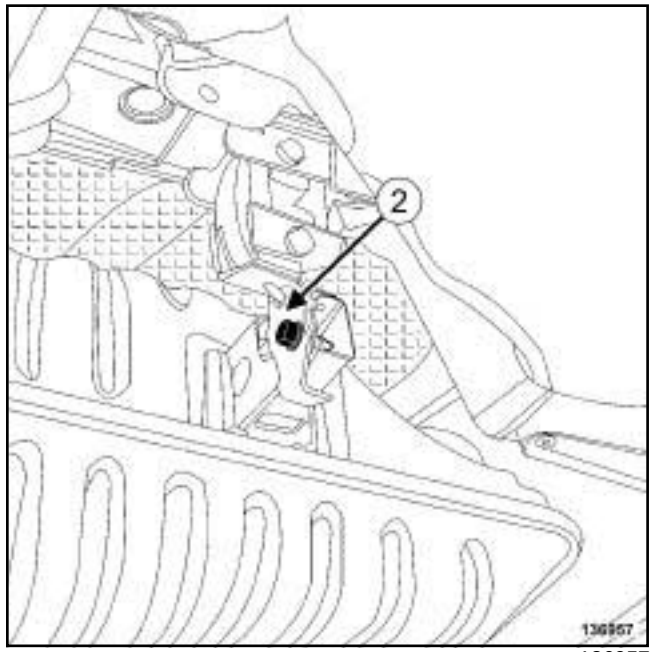

136957

❑ Fit a **component jack** underneath the exhaust silencer.

❑ Remove the exhaust silencer bolt (**2**) .

❑ Cut the exhaust pipe (see **19B**, **Exhaust**, **Exhaust: Precautions for repair**, page **19B-12**) in the designated area to be cut (see **19B**, **Exhaust**, **Exhaust: Parts and consumables for the repair work**, page **19B-1**) .

❑ Remove the exhaust silencer.

F4R

REFITTING

I - REFITTING OPERATION FOR PARTS CONCERNED

❑ Fit the exhaust silencer using a **component jack**.

❑ Refit:

- the exhaust silencer bolt,
- the expansion chamber bolt.

❑ Fit a new After-Sales sleeve between the expansion chamber and the exhaust silencer (see **19B**, **Exhaust**, **Exhaust: Precautions for repair**, page **19B-12**) .

> **IMPORTANT**
> Position the « nut and bolt securing the sleeve » assembly so that the assembly cannot come into contact with the underbody.

> **IMPORTANT**
> Wear protective gloves during the operation.

❑ Tighten the sleeve while supporting the exhaust pipe to ensure they are aligned.

II - FINAL OPERATION

❑ Check:

- that all the exhaust pipe heat shields are in place and properly attached.
- that there is no contact with the underbody,
- that there are no leaks.

K4M

Essential equipment
component jack

IMPORTANT
To avoid all risk of damage to the systems, apply the safety and cleanliness instructions and operation recommendations before carrying out any repair (see **19B**, **Exhaust**, **Exhaust: Precautions for repair**, page **19B-12**) .

WARNING
To prevent the surrounding components from overheating, do not damage (tear, pierce, bend, etc.) a heat shield.

Any damaged heat shields must be replaced.

IMPORTANT
Wear heat protective gloves during the operation.

REMOVAL

I - REMOVAL PREPARATION OPERATION

❑ Position the vehicle on a two-post lift (see **Vehicle: Towing and lifting**) (02A, Lifting equipment).

II - OPERATION FOR REMOVAL OF PART CONCERNED

❑ Cut the exhaust pipe (see **19B**, **Exhaust**, **Exhaust: Precautions for repair**, page **19B-12**) in the designated area to be cut (see **19B**, **Exhaust**, **Exhaust: Parts and consumables for the repair work**, page **19B-1**) .

Note:
Place a **component jack** under the silencer.

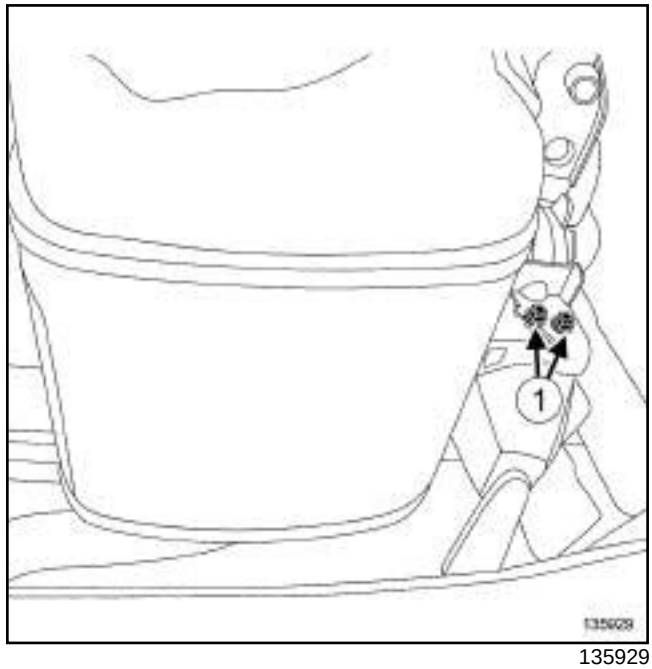

135929

❑ Remove the silencer rubber mounting bush bolts (**1**) .

Note:
If the rubber mounting bushes are damaged, replace them.

❑ Remove the silencer.

REFITTING

I - REFITTING OPERATION FOR PART CONCERNED

❑ Refit:

- the silencer,

- the rubber mounting bush bolts to the silencer.

❑ Fit a new After-Sales sleeve (see **19B**, **Exhaust**, **Exhaust: Precautions for repair**, page **19B-12**) .

IMPORTANT
Position the « nut and bolt securing the sleeve » assembly so that the assembly cannot come into contact with the underbody.

❑ Tighten the sleeve while supporting the exhaust pipe to ensure they are aligned.

K4M

II - FINAL OPERATION

❏ Check:

- that all the exhaust pipe heat shields are in place and properly attached.
- that there is no contact with the underbody.

❏ Start the vehicle.

❏ Check that there are no leaks and deal with them if necessary.

K9K

Essential equipment
component jack

IMPORTANT
To avoid all risk of damage to the systems, apply the safety and cleanliness instructions and operation recommendations before carrying out any repair (see **19B**, **Exhaust**, **Exhaust: Precautions for repair**, page **19B-12**) .

WARNING
To prevent the surrounding components from overheating, do not damage (tear, pierce, bend, etc.) a heat shield.

Any damaged heat shields must be replaced.

IMPORTANT
Wear heat protective gloves during the operation.

REMOVAL

I - REMOVAL PREPARATION OPERATION

❑ Position the vehicle on a two-post lift (see **Vehicle: Towing and lifting**) (02A, Lifting equipment).

❑ Position a **component jack** under the exhaust silencer.

II - OPERATION FOR REMOVAL OF PART CONCERNED

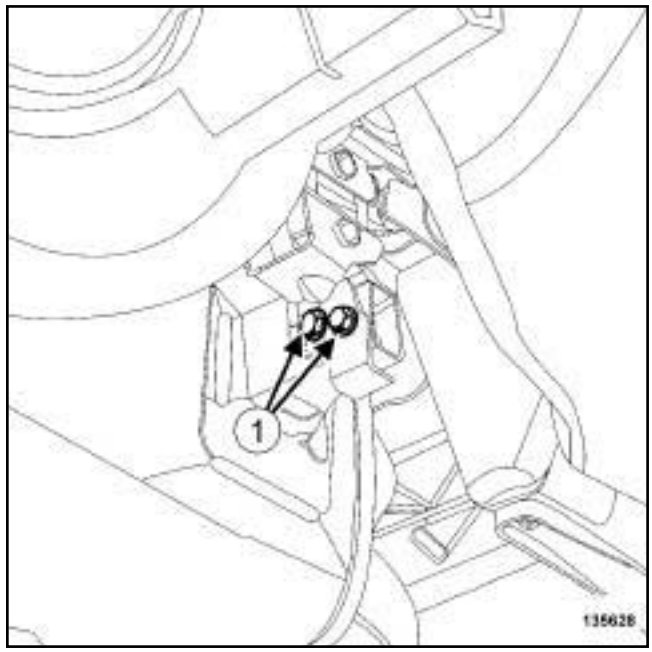

135628

❑ Remove the silencer bolts (**1**) .

❑ Cut the exhaust pipe (see **19B**, **Exhaust**, **Exhaust: Precautions for repair**, page **19B-12**) in the designated area to be cut (see **19B**, **Exhaust**, **Exhaust: Parts and consumables for the repair work**, page **19B-1**) .

❑ Remove the exhaust silencer.

REFITTING

I - REFITTING OPERATION FOR PART CONCERNED

❑ Refit the exhaust silencer using a **component jack**.

IMPORTANT
Position the « nut and bolt securing the sleeve » assembly so that the assembly cannot come into contact with the underbody.

❑ Fit a new After-Sales sleeve (see **19B**, **Exhaust**, **Exhaust: Precautions for repair**, page **19B-12**) .

II - FINAL OPERATION

❑ Check:

- that there is no contact with the underbody,
- that all the exhaust pipe heat shields are in place.

❑ Start the vehicle.

K9K

❑ Check that there are no leaks.

F9Q

Essential equipment
component jack

IMPORTANT
To avoid all risk of damage to the systems, apply the safety and cleanliness instructions and operation recommendations before carrying out any repair (see **19B**, **Exhaust**, **Exhaust: Precautions for repair**, page **19B-12**) .

WARNING
To prevent the surrounding components from overheating, do not damage (tear, pierce, bend, etc.) a heat shield.

Any damaged heat shields must be replaced.

IMPORTANT
Wear heat protective gloves during the operation.

REMOVAL

I - REMOVAL PREPARATION OPERATION

❑ Position the vehicle on a two-post lift (see **Vehicle: Towing and lifting**) (02A, Lifting equipment).

❑ Position a **component jack** under the exhaust silencer.

II - OPERATION FOR REMOVAL OF PART CONCERNED

❑ Cut the exhaust pipe (see **19B**, **Exhaust**, **Exhaust: Precautions for repair**, page **19B-12**) in the designated area to be cut (see **19B**, **Exhaust**, **Exhaust: Parts and consumables for the repair work**, page **19B-1**) .

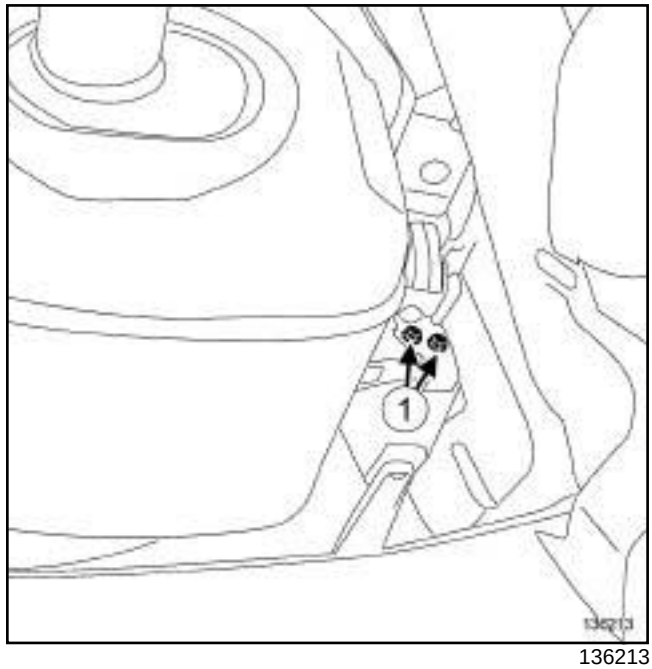

136213

❑ Remove:

- the silencer bolts (**1**) ,
- the silencer.

REFITTING

I - REFITTING OPERATION FOR PART CONCERNED

❑ Refit the exhaust silencer using a **component jack**.

IMPORTANT
Position the « nut and bolt securing the sleeve » assembly so that the assembly cannot come into contact with the underbody.

❑ Fit a new After-Sales sleeve (see **19B**, **Exhaust**, **Exhaust: Precautions for repair**, page **19B-12**) .

II - FINAL OPERATION

❑ Remove the **component jack**.

❑ Check:

- that there is no contact with the underbody,
- that all the exhaust pipe heat shields are in place.

❑ Start the vehicle.

❑ Check that there are no leaks.

F9Q, and 870

Essential equipment
component jack
diagnostic tool

REMOVAL

I - REMOVAL PREPARATION OPERATION

❑ Position the vehicle on a two-post lift (see **Vehicle: Towing and lifting**) (02A, Lifting equipment).

❑ Disconnect the battery (see **Battery: Removal - Refitting**) (80A, Battery).

❑ Remove:

- the engine undertray bolts,
- the engine undertray.

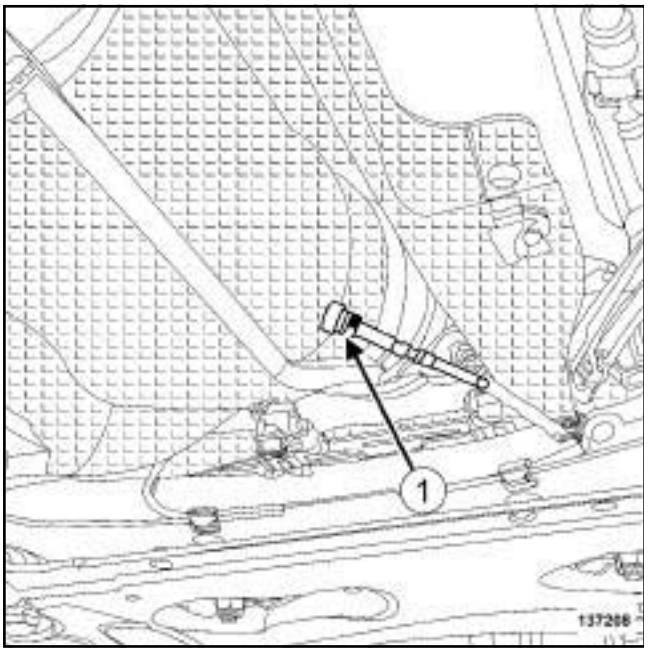

137208

❑ Remove the take-off pipe from the particle filter temperature sensor (**1**) .

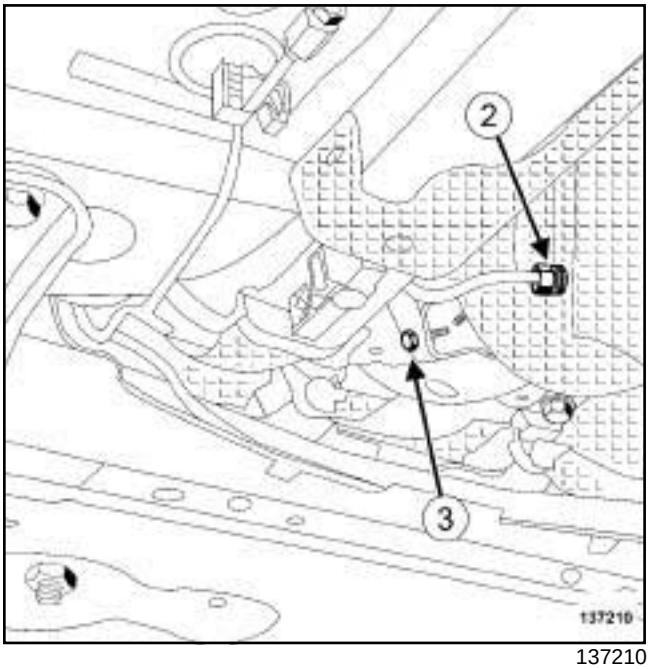

137210

❑ Remove:

- the take-off pipe of the particle filter pressure sensor (**2**) ,
- the bolt (**3**) of the particle filter pressure sensor pipe.

II - OPERATION FOR REMOVAL OF PART CONCERNED

❑ Cut the exhaust pipe (see **19B**, **Exhaust**, **Exhaust: Precautions for repair**, page **19B-12**) in the designated area to be cut (see **19B**, **Exhaust**, **Exhaust: Parts and consumables for the repair work**, page **19B-1**) .

F9Q, and 870

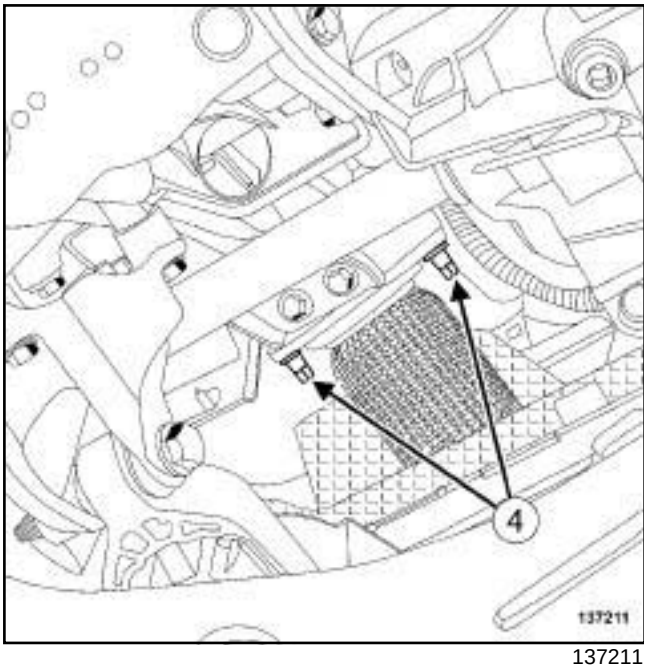

137211

❑ Remove the nuts (**4**) from the exhaust bracket.

❑ Place a **component jack** under the particle filter.

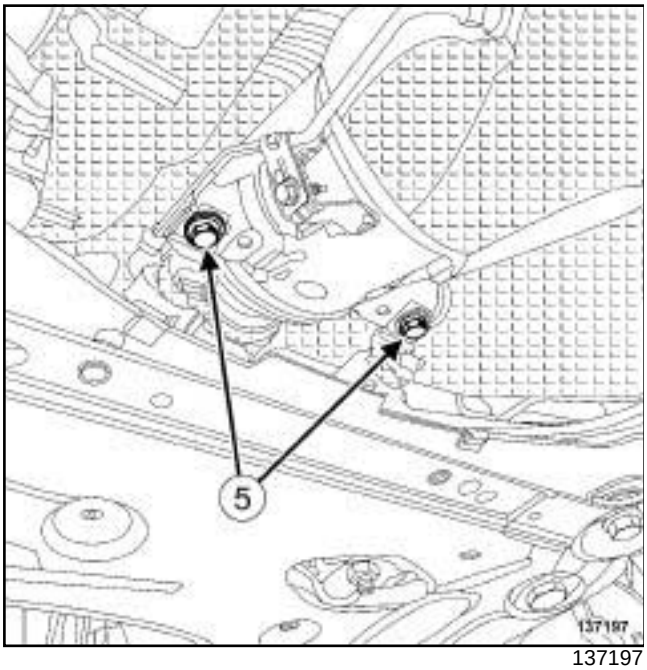

137197

❑ Remove:

- the particle filter support bolts (**5**) ,
- particle filter.
- the exhaust flange seal.

REFITTING

I - REFITTING PREPARATION OPERATION

❑ Always replace the exhaust bracket seal.

❑ Use **SURFACE CLEANER** (see **Vehicle: Parts and ingredients for the repairwork**) (04B, Consumables - Products) to clean and degrease the bearing faces between the exhaust flange and the particle filter.

II - REFITTING OPERATION FOR PART CONCERNED

❑ Refit:

- a new exhaust flange seal,
- the particle filter using the **component jack**,
- the particle filter support bolts,
- the exhaust flange bolts.

❑ Fit a new After-Sales sleeve and follow the instructions (see **19B**, **Exhaust**, **Exhaust: Precautions for repair**, page **19B-12**) .

III - FINAL OPERATION

❑ Refit:

- the bolt of the particle filter pressure sensor pipe,
- the take-off pipe of the particle filter pressure sensor.

❑ Refit the take-off pipe of the particle filter temperature sensor.

❑ Make sure that there is no contact with the underbody.

❑ Connect the battery (see **Battery : Removal - Refitting**) (80A, Battery).

❑ Apply the after repair procedure using the **diagnostic tool** :

- connect the diagnostic tool,
- select « Injection computer » ,
- go to repair mode,
- display the « before/after repair procedure » for the computer selected,
- select « Particle filters» in the « List of components controlled by this computer » section,
- carry out the operations described in the « After repair procedure » section.

❑ Start the engine.

F9Q, and 870

- ❑ Check that there are no leaks and deal with them if necessary.
- ❑ Refit the engine undertray.

F9Q, and 870

Essential special tooling	
Mot. 1807	Spanner for tightening exhaust gas temperature sensor

Tightening torques ▽	
the exhaust gas temperature sensor	**40 N.m**

REMOVAL

I - REMOVAL PREPARATION OPERATION

❑ Position the vehicle on a two-post lift (see **Vehicle: Towing and lifting**) (02A, Lifting equipment).

❑ Remove:

- the engine cover,
- the engine undertray bolts,
- the engine undertray,
- the windscreen wiper arms (see **Rear screen wiper arm: Removal - Refitting**) (85A, Wiping - Washing),
- the scuttle panel grille (see **Scuttle panel grille: Removal - Refitting**) (56A, Exterior equipment),
- the scoop under the scuttle panel grille (see **Scoop under scuttle panel grille: Removal - Refitting**) (56A, Exterior equipment),
- the battery (see **Battery: Removal - Refitting**) (80A, Battery),
- the battery tray (see **Battery tray: Removal - Refitting**) (80A, Battery),
- the intercooler air inlet pipe (see **12B**, **Turbocharging**, **Intercooler air inlet pipe: Removal - Refitting**, page **12B-41**) .

II - OPERATION FOR REMOVAL OF PART CONCERNED

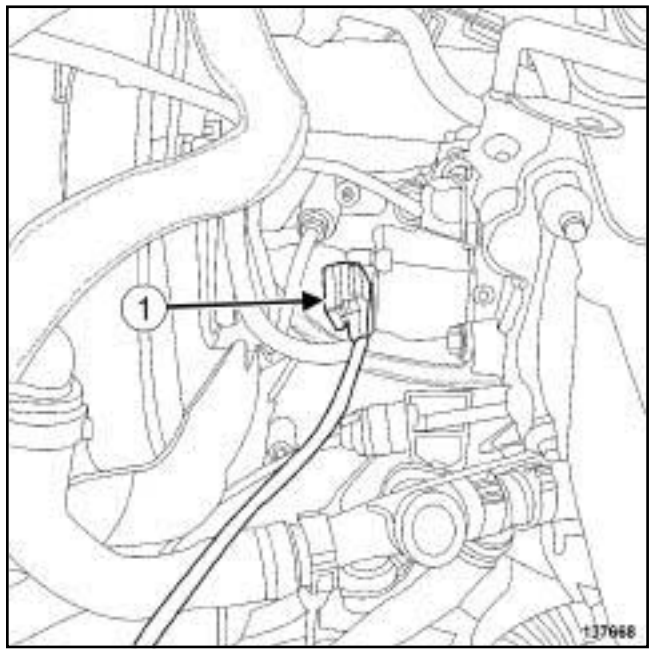

137668

❑ Disconnect the exhaust gas temperature sensor connector (**1**) .

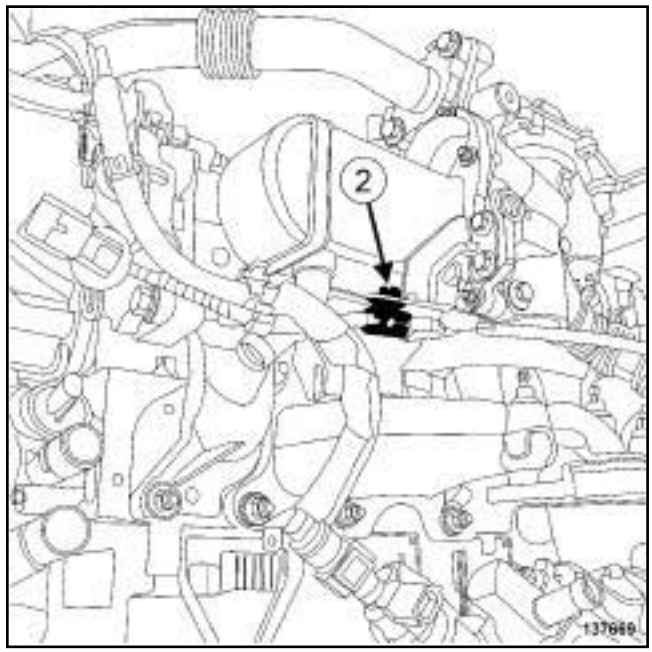

137669

❑ Unclip the wiring (**2**) of the exhaust gas temperature sensor.

F9Q, and 870

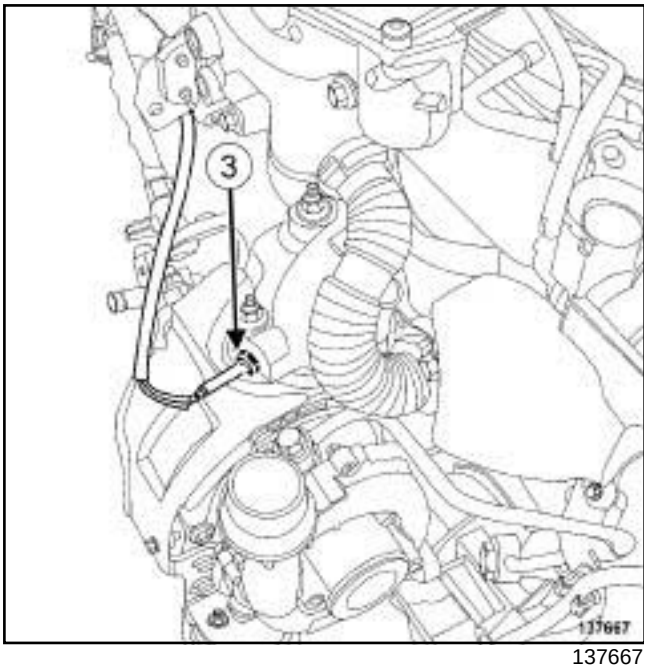

137667

❑ Remove the exhaust gas temperature sensor (**3**) using the tool **(Mot. 1807)**.

REFITTING

I - REFITTING OPERATION FOR PART CONCERNED

❑ Refit the exhaust gas temperature sensor.

❑ Torque tighten **the exhaust gas temperature sensor (40 N.m)**.

❑ Clip on the exhaust gas temperature sensor wiring.

❑ Connect the exhaust gas temperature sensor connector.

II - FINAL OPERATION

❑ Refit:

- the intercooler air inlet pipe (see **12B**, **Turbocharging**, **Intercooler air inlet pipe: Removal - Refitting**, page **12B-41**) ,
- the battery tray (see **Battery tray: Removal - Refitting**) (80A, Battery),
- the battery (see **Battery: Removal - Refitting**) (80A, Battery),
- the scoop under the scuttle panel grille (see **Scoop under scuttle panel grille: Removal - Refitting**) (56A, Exterior equipment),
- the scuttle panel grille (see **Scuttle panel grille: Removal - Refitting**) (56A, Exterior equipment),
- the windscreen wiper arms (see **Rear screen wiper arm: Removal - Refitting**) (85A, Wiping - Washing),
- the engine undertray,
- the engine cover.

F9Q, and 870

IMPORTANT
To avoid all risk of damage to the systems, apply the safety and cleanliness instructions and operation recommendations before carrying out any repair (see **19B**, **Exhaust**, **Exhaust: Precautions for repair**, page **19B-12**) .

REMOVAL

I - REMOVAL PREPARATION OPERATION

❑ Position the vehicle on a two-post lift (see **Vehicle: Towing and lifting**) (02A, Lifting equipment).

❑ Disconnect the battery (see **Battery: Removal - Refitting**) (80A, Battery).

❑ Refit:

- the engine undertray bolts,
- the engine undertray.

II - OPERATION FOR REMOVAL OF PART CONCERNED

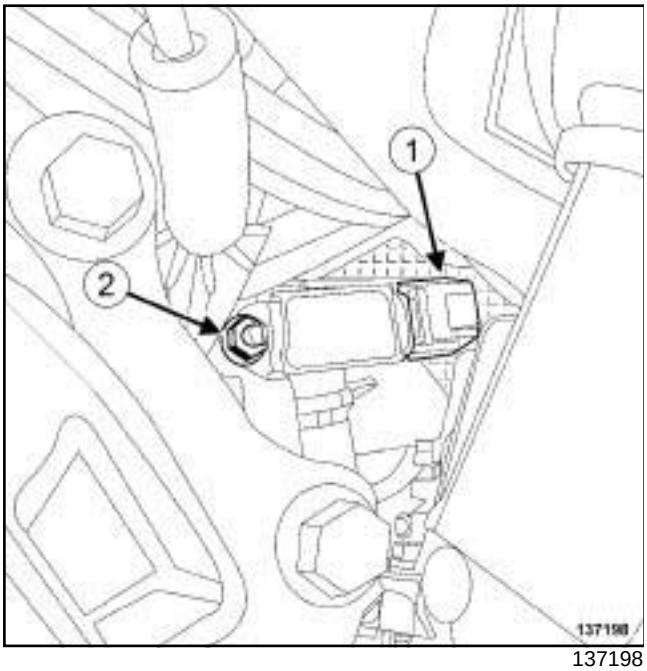

137198

❑ Disconnect the particle filter pressure sensor connector (**1**) .

❑ Remove the particle filter pressure sensor nut (**2**) .

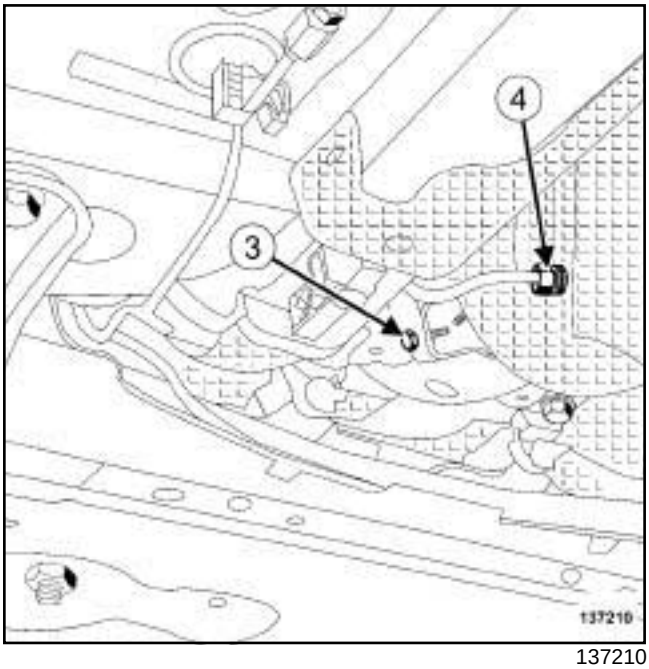

137210

❑ Remove:

- the bolt of the particle filter pressure measurement pipe (**3**) ,
- the particle filter pressure measurement pipe (**4**) ,
- the pressure sensor with its pipe.

REFITTING

I - REFITTING PREPARATION OPERATION

❑ Coat the threaded union of the particle filter pressure measurement pipe with **COPPER-ALUMINIUM LUBRICANT** (see **Vehicle: Parts and consumables for repair**) (04B, Consumables - Products).

II - REFITTING OPERATION FOR PART CONCERNED

❑ Refit:

- the particle filter pressure measurement pipe,
- the bolt of the particle filter pressure measurement pipe,
- the particle filter pressure sensor nut.

❑ Connect the particle filter pressure sensor connector.

III - FINAL OPERATION

❑ Refit the engine undertray.

❑ Connect the battery (see **Battery : Removal - Refitting**) (80A, Battery).

F9Q, and 870

REMOVAL

I - REMOVAL PREPARATION OPERATION

❑ Position the vehicle on a two-post lift (see **Vehicle: Towing and lifting**) (02A, Lifting equipment).

❑ Disconnect the battery (see **Battery: Removal - Refitting**) (80A, Battery).

❑ Remove:

- the engine undertray bolts,
- the engine undertray.

II - OPERATION FOR REMOVAL OF PART CONCERNED

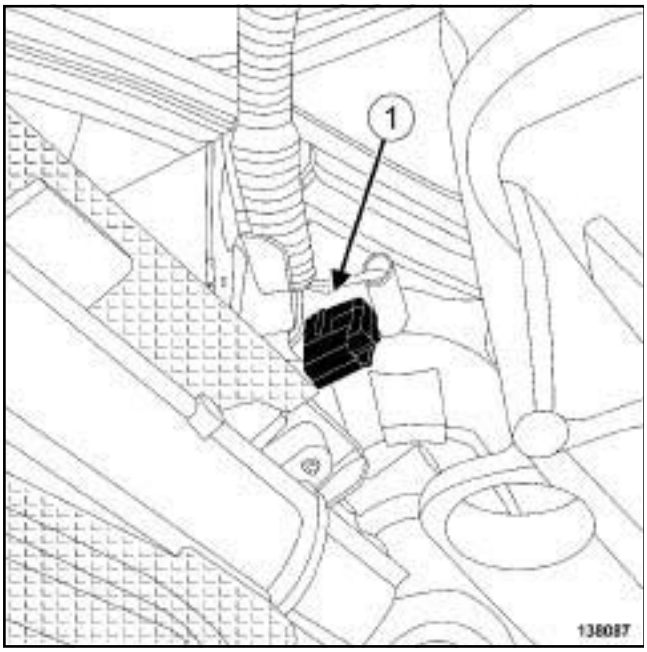

138087

❑ Disconnect the particle filter temperature sensor connector (**1**) .

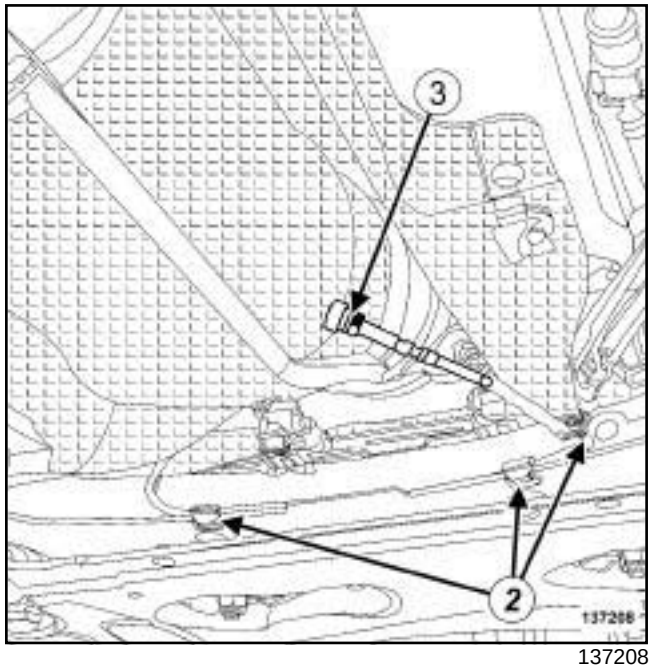

137208

❑ Unclip the particle filter temperature sensor wiring (**2**) .

❑ Remove the particle filter temperature sensor (**3**) .

REFITTING

I - REFITTING PREPARATION OPERATION

❑ Coat the threading of the particle filter temperature sensor with **COPPER-ALUMINIUM LUBRICANT** (see **Vehicle: Parts and ingredients for the repairwork**) (04B, Consumables - Products).

II - REFITTING OPERATION FOR PART CONCERNED

❑ Refit the particle filter temperature sensor.

❑ Clip on the particle filter temperature sensor wiring.

❑ Connect the particle filter temperature sensor connector.

III - FINAL OPERATION

❑ Refit the engine undertray.

❑ Connect the battery (see **Battery : Removal - Refitting**) (80A, Battery).

F9Q, and 870

Tightening torques ▽	
the bolt of the exhaust fuel injector clamp	**25 N.m**

IMPORTANT
To avoid all risk of damage to the systems, apply the safety and cleanliness instructions and operation recommendations before carrying out any repair (see **19B**, **Exhaust**, **Exhaust: Precautions for repair**, page **19B-12**) .

REMOVAL

I - REMOVAL PREPARATION OPERATION

❑ Position the vehicle on a lift (see **Vehicle: Towing and lifting**) (02A, Lifting equipment).

❑ Remove:

- the engine cover,
- the engine undertray bolts,
- the engine undertray,
- the windscreen wiper arms (see **Windscreen wiper arm: Removal - Refitting**) (85A, Wiping - Washing),
- the scuttle panel grille (see **Scuttle panel grille: Removal - Refitting**) (56A, Exterior equipment),
- the scoop under the scuttle panel grille (see **Scoop under scuttle panel grille: Removal - Refitting**) (56A, Exterior equipment),
- the battery (see **Battery: Removal - Refitting**) (80A, Battery),
- the battery tray (see **Battery tray: Removal - Refitting**) (80A, Battery),
- the intercooler air inlet pipe (see **12B**, **Turbocharging**, **Intercooler air inlet pipe: Removal - Refitting**, page **12B-41**) .

II - OPERATION FOR REMOVAL OF PART CONCERNED

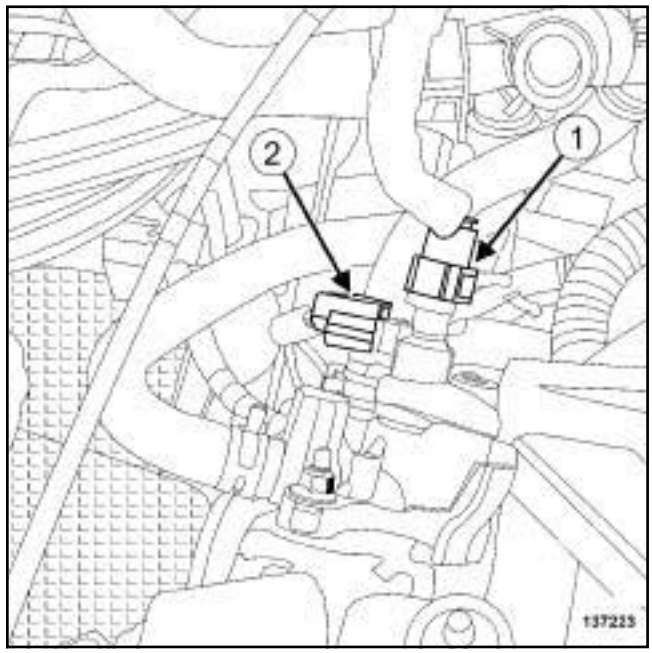

137223

❑

WARNING
To prevent impurities from entering the circuit, place protective plugs on all fuel circuit components exposed to the open air.

❑ Disconnect the quick-release union (**1**) of the fuel pipe on the injector.

❑ Insert the blanking plugs.

❑ Disconnect the exhaust fuel injector connector (**2**) .

F9Q, and 870

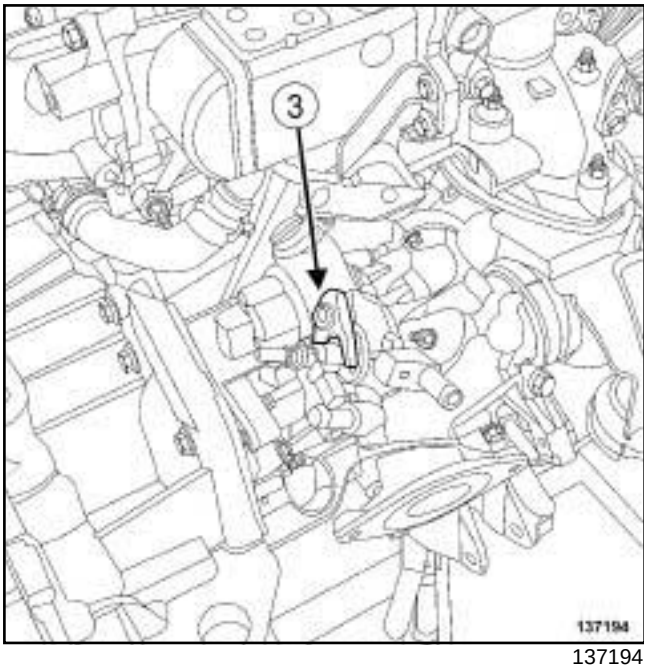

137194

❑ Remove the bolt of the exhaust fuel injector clamp (**3**) .

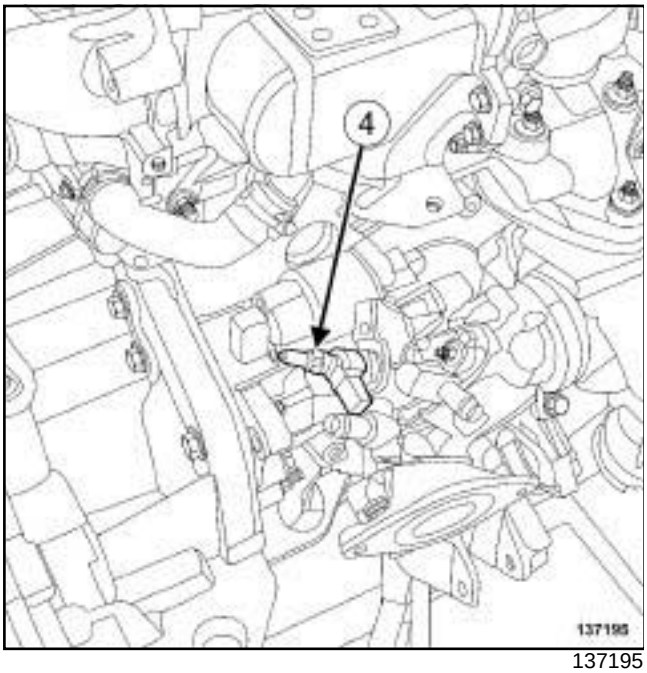

137195

❑ Remove the exhaust fuel injector (**4**) on the catalytic pre-converter.

REFITTING

I - REFITTING PREPARATION OPERATION

❑

> **WARNING**
> Do not remove the blanking plugs from each component until the last moment.
>
> Also, do not remove the components from their packaging until they are to be fitted to the vehicle.

❑ **parts always to be replaced: Exhaust fuel injector seal (10,08,02,14)**.

II - REFITTING OPERATION FOR PART CONCERNED

❑ Refit:

- a new seal for the exhaust fuel injector,
- the exhaust fuel injector,
- the exhaust fuel injector clamp.

❑ Torque tighten **the bolt of the exhaust fuel injector clamp (25 N.m)**.

❑ Connect the exhaust fuel injector connector.

❑ Remove the blanking plugs.

❑ Refit the quick-release union of the fuel pipe on the exhaust fuel injector.

III - FINAL OPERATION

❑ Refit:

- the intercooler air inlet pipe (see **12B**, **Turbocharging**, **Intercooler air inlet pipe: Removal - Refitting**, page **12B-41**) ,
- the battery tray (see **Battery tray: Removal - Refitting**) (80A, Battery),
- the battery (see **Battery: Removal - Refitting**) (80A, Battery),
- the scoop under the scuttle panel grille (see **Scoop under scuttle panel grille: Removal - Refitting**) (56A, Exterior equipment),
- the scuttle panel grille (see **Scuttle panel grille: Removal - Refitting**) (56A, Exterior equipment),
- the windscreen wiper arms (see **Windscreen wiper arm: Removal - Refitting**) (85A, Wiping - Washing),
- the engine undertray,
- the engine cover.

F9Q, and 870

REMOVAL

I - REMOVAL PREPARATION OPERATION

❑ Disconnect the battery (see **Battery: Removal - Refitting**) (80A, Battery).

❑ Remove:

- the engine cover,
- the fuel temperature sensor (see **13B**, **Diesel injection**, **Fuel temperature sensor: Removal - Refitting**, page **13B-118**) .

II - OPERATION FOR REMOVAL OF PART CONCERNED

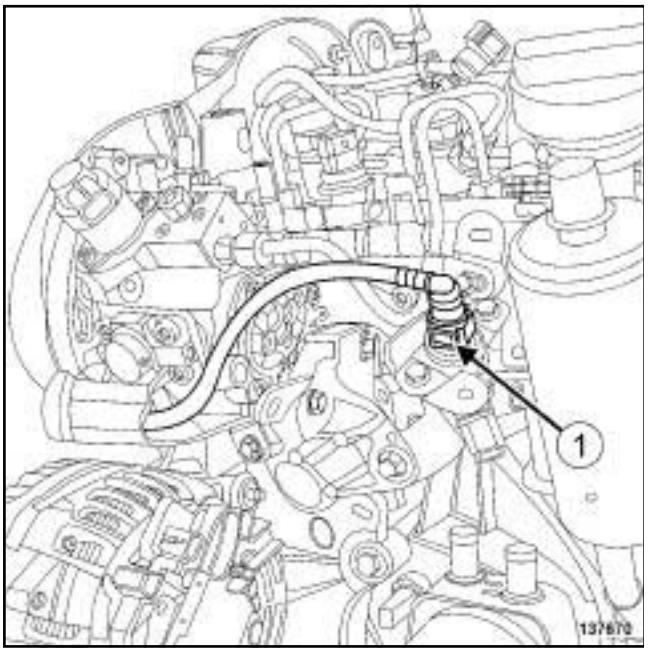

137670

❑

WARNING
To prevent impurities from entering the circuit, place protective plugs on all fuel circuit components exposed to the open air.

❑ Disconnect the upper union (**1**) of the fuel pipe of the exhaust fuel injector solenoid valve.

❑ Fit blanking plugs.

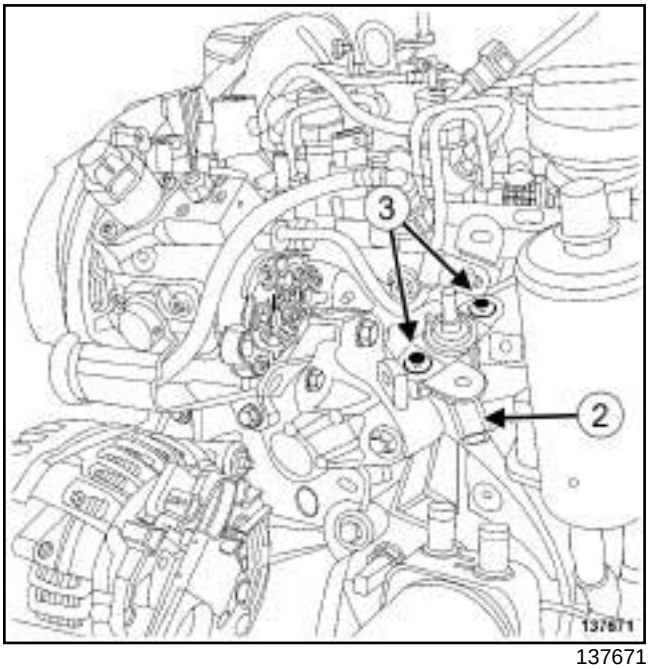

137671

❑ Disconnect the connector (**2**) of the exhaust fuel injector solenoid valve.

❑ Remove the bolts (**3**) of the exhaust fuel injector solenoid valve.

F9Q, and 870

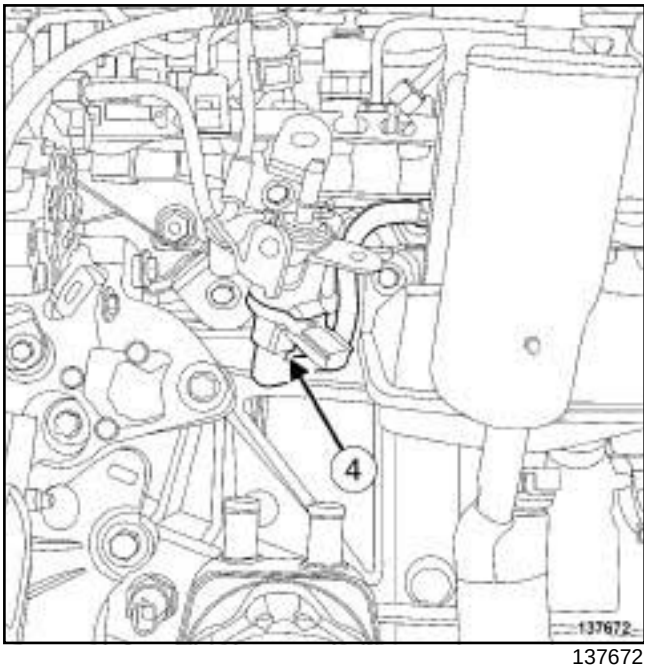

137672

❑

> **WARNING**
> To prevent impurities from entering the circuit, place protective plugs on all fuel circuit components exposed to the open air.

❑ Disconnect the lower union (**4**) of the fuel pipe of the exhaust fuel injector solenoid valve.

❑ Remove the exhaust fuel injector solenoid valve.

REFITTING

I - REFITTING PREPARATION OPERATION

❑

> **WARNING**
> Do not remove the blanking plugs from each component until the last moment.
>
> Also, do not remove the components from their packaging until they are to be fitted to the vehicle.

II - REFITTING OPERATION FOR PART CONCERNED

❑ Remove the blanking plugs.

❑ Connect the lower union of the fuel pipe of the exhaust fuel injector solenoid valve.

❑ Refit the exhaust fuel injector solenoid valve.

❑ Connect:

- the connector of the exhaust fuel injector solenoid valve,
- the upper union of the fuel pipe of the exhaust fuel injector solenoid valve.

III - FINAL OPERATION

❑ Refit:

- the fuel temperature sensor (see **13B**, **Diesel injection**, **Fuel temperature sensor: Removal - Refitting**, page **13B-118**) ,
- the engine cover.

❑ Connect the battery (see **Battery: Removal - Refitting**) .

F9Q, and 870

Essential special tooling	
Ms. 583	Hose clamp pliers.
Mot. 1448	Long nose pliers for hose clips.

Tightening torques ▽	
the nuts of the exhaust fuel injector cooler	**35 N.m**

REMOVAL

I - REMOVAL PREPARATION OPERATION

❑ Position the vehicle on a two-post lift (see **Vehicle: Towing and lifting**) .

❑ Remove:

- the engine cover,
- the engine undertray bolts,
- the engine undertray,
- the windscreen wiper arms (see **Windscreen wiper arm: Removal - Refitting**) (85A, Wiping - Washing),
- the scuttle panel grille (see **Scuttle panel grille: Removal - Refitting**) (56A, Exterior equipment),
- the scoop under the scuttle panel grille (see **Scoop under scuttle panel grille: Removal - Refitting**) (56A, Exterior equipment),
- the battery (see **Battery: Removal - Refitting**) (80A, Battery),
- the battery tray (see **Battery tray: Removal - Refitting**) (80A, Battery),
- the intercooler air inlet pipe (see **12B**, **Turbocharging**, **Intercooler air inlet pipe: Removal - Refitting**, page **12B-41**) ,
- the exhaust fuel injector (see **19B**, **Exhaust**, **Exhaust fuel injector: Removal - Refitting**, page **19B-54**) .

II - OPERATION FOR REMOVAL OF PART CONCERNED

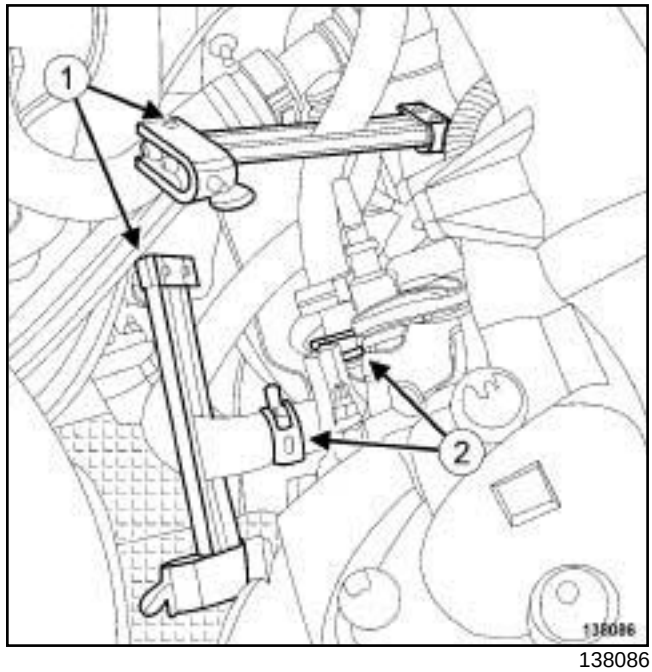

138086

❑ Fit the tools **(Ms. 583)** (**1**) on the hoses of the exhaust fuel injector cooler.

❑ Separate the clips (**2**) on the hoses of the exhaust fuel injector cooler using the tool **(Mot. 1448)**.

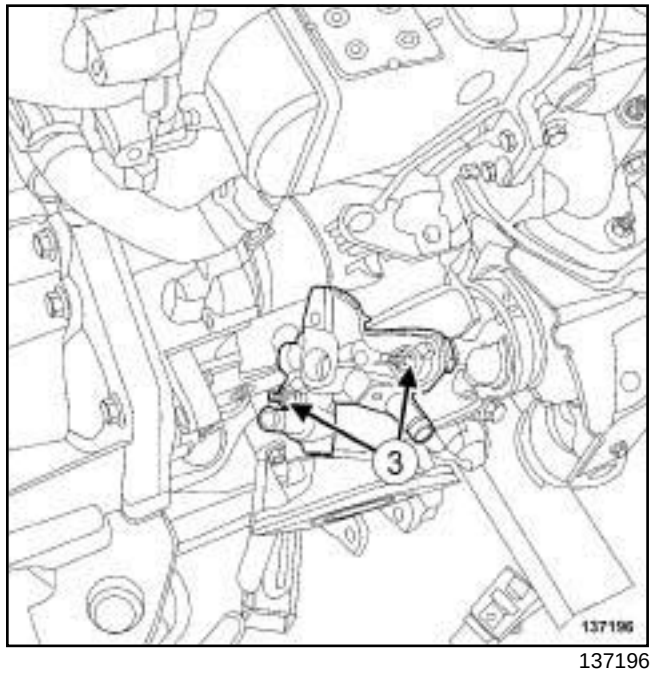

137196

❑ Remove:

- the nuts (**3**) of the exhaust fuel injector cooler,
- the exhaust fuel injector cooler,
- Disconnect the hoses of the exhaust fuel injector cooler.

F9Q, and 870

REFITTING

I - REFITTING OPERATION FOR PART CONCERNED

❏ Refit the exhaust fuel injector cooler.

❏ Torque tighten **the nuts of the exhaust fuel injector cooler (35 N.m)**.

❏ Connect the hoses to the exhaust fuel injector cooler.

❏ Fit the clips on the hoses of the exhaust fuel injector cooler using the tool **(Mot. 1448)**.

II - FINAL OPERATION

❏ Refit:

- the exhaust fuel injector (see **19B**, **Exhaust**, **Exhaust fuel injector: Removal - Refitting**, page **19B-54**) ,
- the intercooler air inlet pipe (see **12B**, **Turbocharging**, **Intercooler air inlet pipe: Removal - Refitting**, page **12B-41**) ,
- the battery tray (see **Battery tray: Removal - Refitting**) (80A, Battery),
- the battery (see **Battery: Removal - Refitting**) (80A, Battery),
- the scoop under the scuttle panel grille (see **Scoop under scuttle panel grille: Removal - Refitting**) (56A, Exterior equipment),
- the scuttle panel grille (see **Scuttle panel grille: Removal - Refitting**) (56A, Exterior equipment),
- the windscreen wiper arms (see **Windscreen wiper arm: Removal - Refitting**) (85A, Wiping - Washing),
- the engine undertray,
- the engine cover.

❏ Bleed the cooling system (see **19A**, **Cooling**, **Cooling circuit: Draining - Refilling**, page **19A-17**) .

F4R

Essential equipment
component jack

IMPORTANT
To avoid all risk of damage to the systems, apply the safety and cleanliness instructions and operation recommendations before carrying out any repair (see **19B**, **Exhaust**, **Exhaust: Precautions for repair**, page **19B-12**) .

WARNING
To prevent the surrounding components from overheating, do not damage (tear, pierce, bend, etc.) a heat shield.

Any damaged heat shields must be replaced.

IMPORTANT
Wear heat protective gloves during the operation.

REMOVAL

I - REMOVAL PREPARATION OPERATION

❑ Position the vehicle on a two-post lift (see **Vehicle: Towing and lifting**) .

❑ Remove:

- the engine undertray bolts,
- the engine undertray.

II - OPERATION FOR REMOVAL OF PART CONCERNED

❑ Place a **component jack** under the expansion chamber.

❑ Cut the exhaust pipe (see **19B**, **Exhaust**, **Exhaust: Precautions for repair**, page **19B-12**) at the designated area to be cut (see **19B**, **Exhaust**, **Exhaust: Parts and consumables for the repair work**, page **19B-1**) (04B, Consumables - Products).

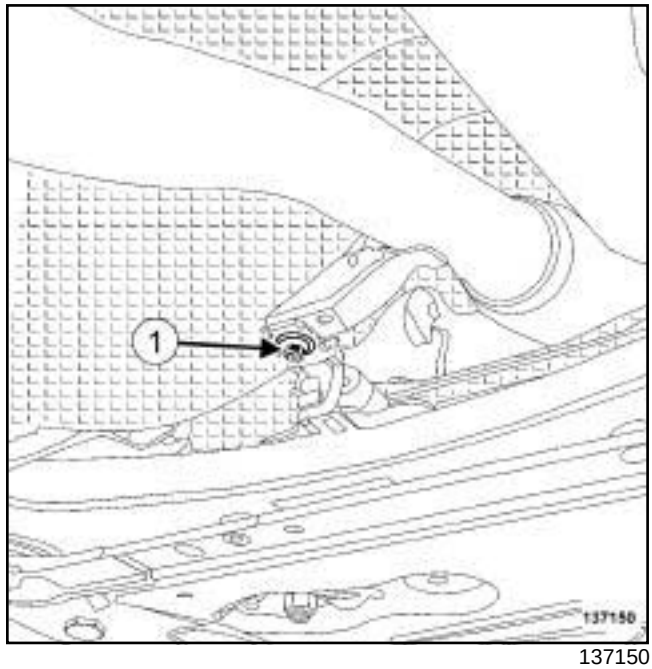

137150

❑ Remove the bolt (**1**) of the rubber mounting bush of the exhaust connecting hose.

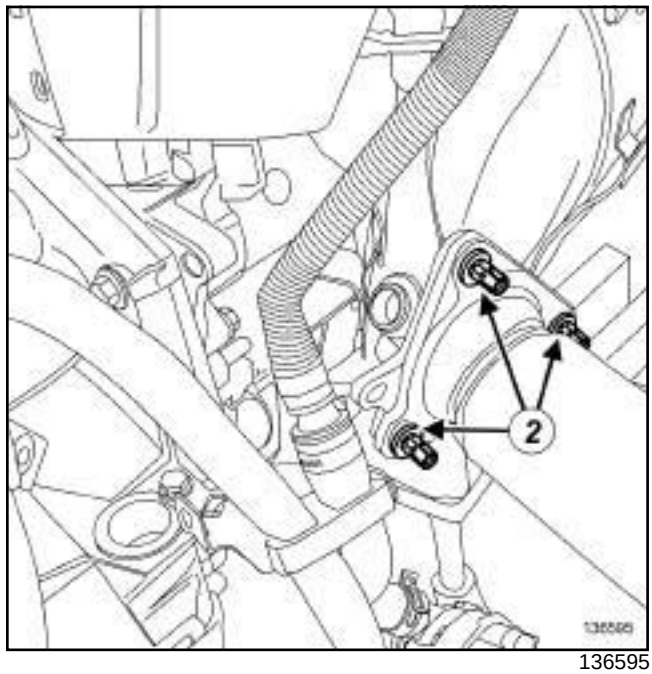

136595

❑ Remove:

- the exhaust connecting hose nuts (**2**) on the catalytic converter,
- the exhaust connecting hose,
- the exhaust connecting hose seal.

F4R

REFITTING

I - REFITTING PREPARATION OPERATION

❑ **parts always to be replaced: seal between catalytic converter and exhaust downpipe hose (10, 08,02,21)**.

❑ Use **SURFACE CLEANER** (see **Vehicle: Parts and ingredients for the repairwork**) (04B, Consumables - Products) to clean the bearing faces of the catalytic converter and the exhaust connecting hose.

II - REFITTING OPERATION FOR PART CONCERNED

❑ Refit:

- a new seal on the exhaust connecting hose,
- the exhaust connecting hose,
- the exhaust connecting hose nuts,
- the bolt of the rubber mounting bush of the exhaust connecting hose.

❑ Fit a new After-Sales sleeve between the expansion chamber and the connecting hose (see **19B**, **Exhaust**, **Exhaust: Parts and consumables for the repair work**, page **19B-1**) .

IMPORTANT
Position the « nut and bolt securing the sleeve » assembly so that the assembly cannot come into contact with the underbody.

❑ Tighten the sleeve while supporting the exhaust pipe to ensure they are aligned.

III - FINAL OPERATION

❑ Check:

- that all the exhaust pipe heat shields are in place and properly attached.
- that there is no contact with the underbody,
- that there are no leaks.

❑ Refit the engine undertray.

Connecting hose: Removal - Refitting

F9Q, and 870

- The connecting hose is not sold separately in the Parts Department. To replace it, the particle filter must be replaced (see **19B**, **Exhaust**, **Particle filter: Removal - Refitting**, page **19B-47**) .

Essential special tooling	
Mot. 1311-08	Union for measuring fuel pressure.

Essential equipment
pneumatic transfer pump for fuels

IMPORTANT

During this operation, be sure to:

- refrain from smoking or bringing red hot objects close to the working area,
- be careful of fuel splashes when disconnecting the union.

IMPORTANT

Wear leaktight gloves (Nitrile type) for this operation.

IMPORTANT

Wear goggles with side protectors for this operation.

WARNING

To prevent impurities from entering the circuit, place protective plugs on all fuel circuit components exposed to the open air.

WARNING

To avoid any corrosion or damage, protect the areas on which fuel is likely to run.

DRAINING

I - DRAINING PREPARATION OPERATION

❑ Disconnect the battery (see **Battery: Removal - Refitting**) (80A, Battery).

II - DRAINING OPERATION

F9Q or K9K

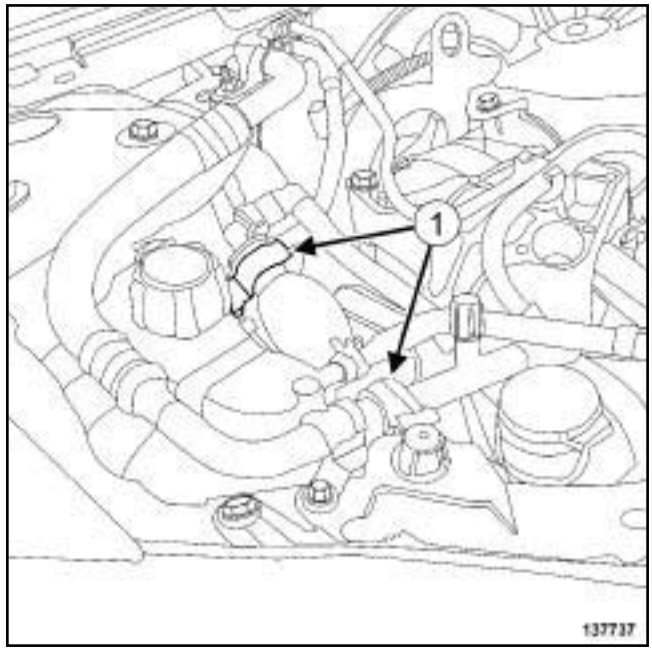

137737

❑ Unclip the manual fuel priming pump at (**1**) .

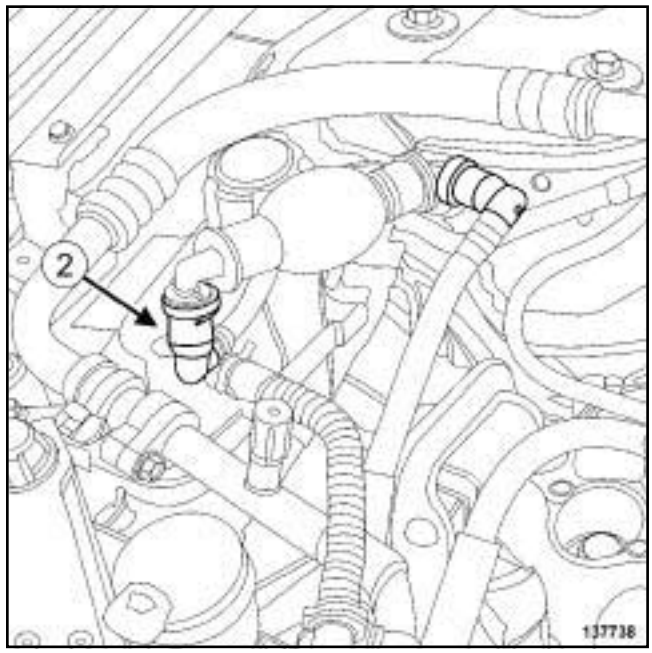

137738

❑ Disconnect the fuel supply pipe union (**2**) from the manual fuel priming pump.

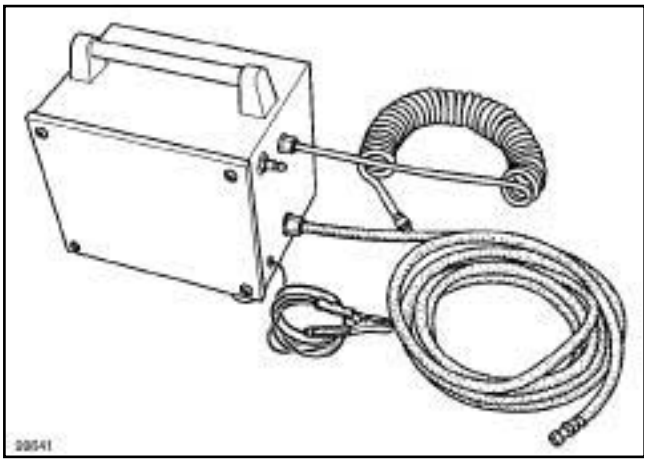

99641

❑ Connect the **pneumatic transfer pump for fuels** on the fuel supply pipe of the fuel priming pump.

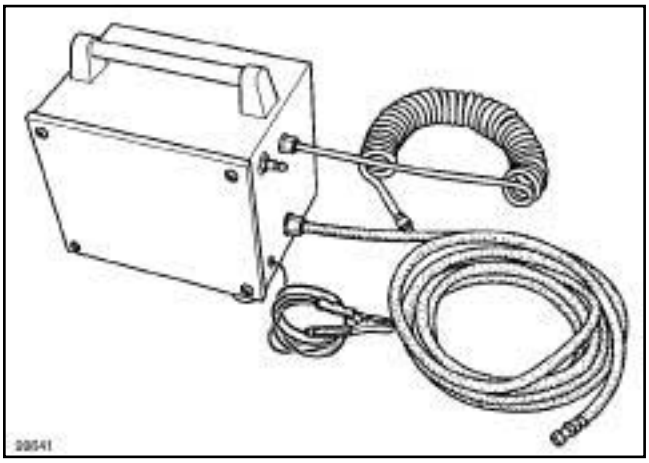

99641

❑ Connect a **pneumatic transfer pump for fuels** to the « T » union outlet.

F4R

❑ Remove the front engine cover.

❑ Disconnect the fuel supply pipe union from the injector rail.

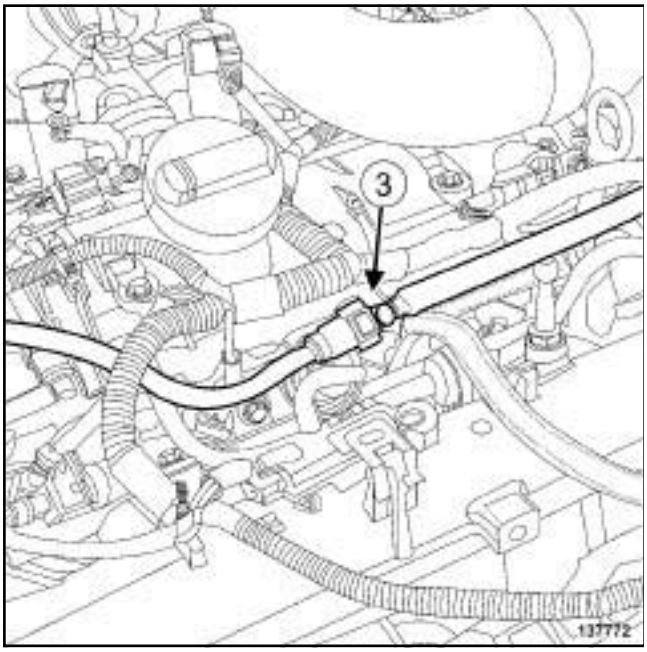

137772

❑ Fit a « T » union **(Mot. 1311-08)** (**3**) .

K4M

❑ Remove the front engine cover.

❑ Disconnect the fuel supply pipe union from the injector rail.

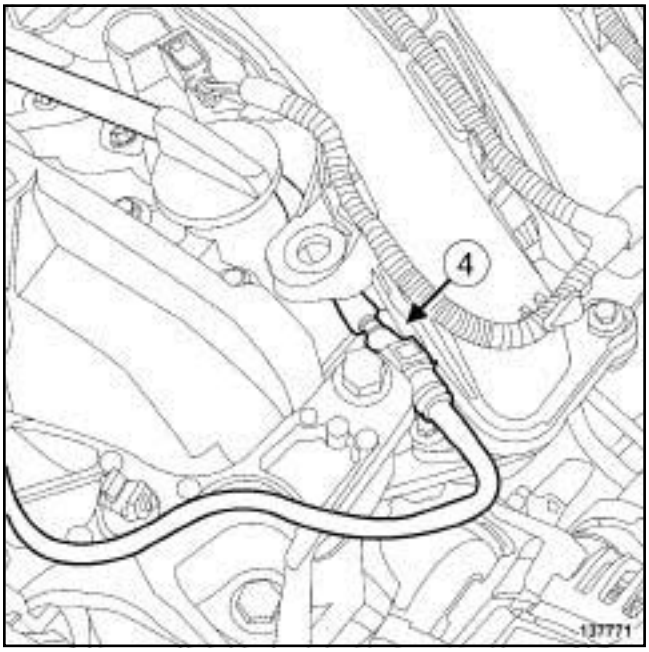

137771

❑ Fit a « T » union **(Mot. 1311-08)** (**4**) .

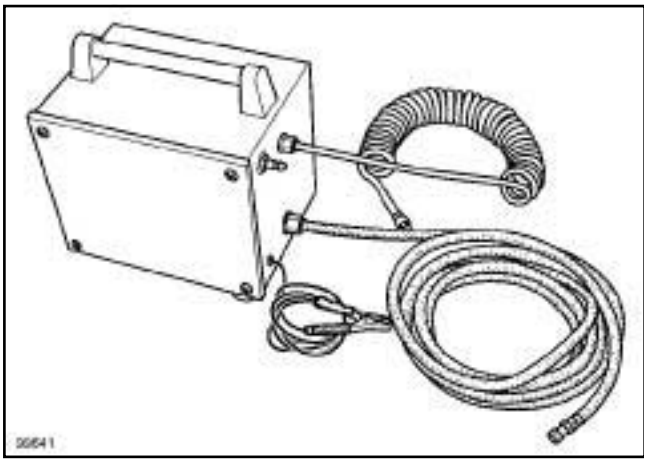

99641

- Connect a **pneumatic transfer pump for fuels** to the « T » union outlet.

- Drain the fuel tank.

REFITTING

F9Q or K9K

- Disconnect the **pneumatic transfer pump for fuels** from the fuel supply pipe of the manual fuel priming pump.
- Connect the fuel supply pipe on the manual fuel priming pump.
- Refit the manual fuel priming pump.

F4R or K4M

- Disconnect the **pneumatic transfer pump for fuels** from the « T » union outlet.
- Remove the « T » union **(Mot. 1311-08)**.
- Connect the fuel supply union on the injector rail.
- Refit the engine cover.

- Connect the battery (see **Battery: Removal - Refitting**) (80A, Battery).

Essential special tooling	
Mot. 1352	Plastic fuel pipe cutter.

Essential equipment
component support

Tightening torques ▽	
fuel tank bolts	**21 N.m**
rear heat shield bolts	**21 N.m**

IMPORTANT

During this operation, be sure to:

- refrain from smoking or bringing red hot objects close to the working area,
- be careful of fuel splashes when disconnecting the union.

IMPORTANT

Wear leaktight gloves (Nitrile type) for this operation.

IMPORTANT

Wear goggles with side protectors for this operation.

WARNING

To avoid any corrosion or damage, protect the areas on which fuel is likely to run.

WARNING

To prevent impurities from entering the circuit, place protective plugs on all fuel circuit components exposed to the open air.

WARNING

To prevent the surrounding components from overheating, do not damage (tear, pierce, bend, etc.) a heat shield.

Any damaged heat shields must be replaced.

REMOVAL

I - REMOVAL PREPARATION OPERATION

❑ Position the vehicle on a two-post lift (see **Vehicle: Towing and lifting**) (02A, Lifting equipment).

❑ Disconnect the battery (see **Battery: Removal - Refitting**) (80A, Battery).

❑ Drain the fuel tank (see **19C**, **Tank**, **Fuel tank: Draining**, page **19C-1**) .

❑ Raise the rear bench seat.

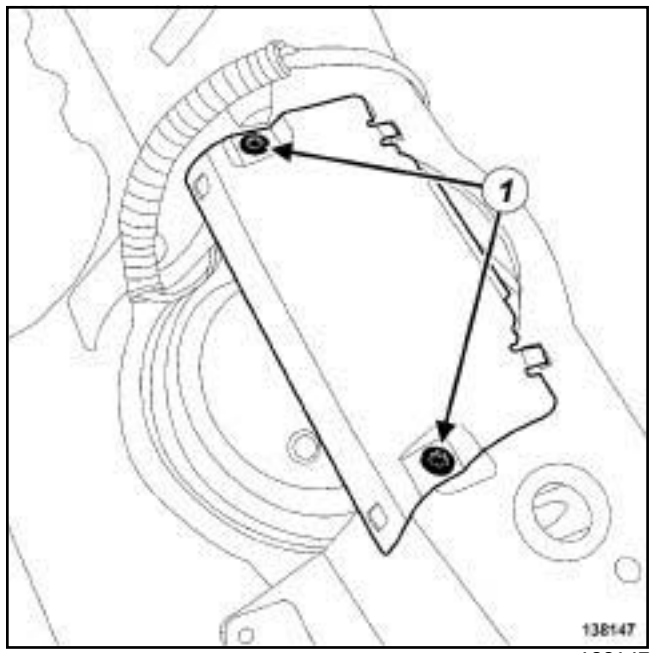

138147

❑ Remove:

- the subframe panel bolts (**1**) ,
- the subframe panel,
- the plastic blanking cover of the passenger compartment.

F9Q or K9K

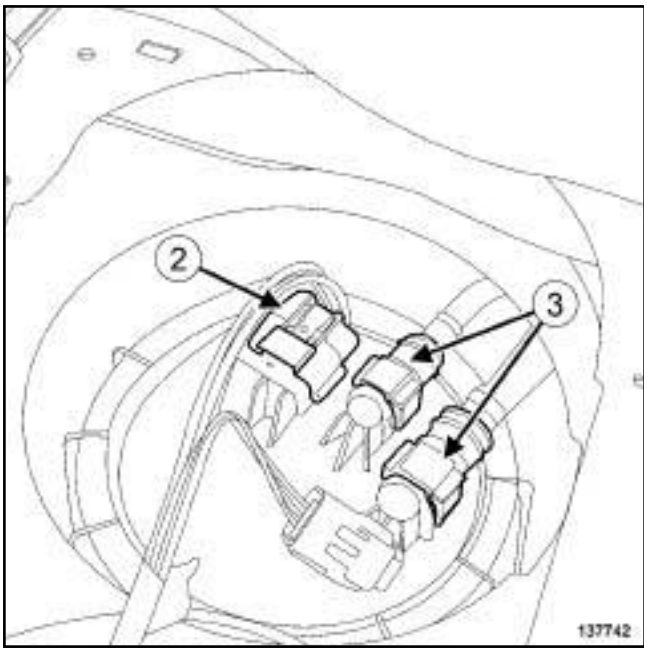

137742

❑ Disconnect:

- the fuel level sensor module connector (**2**) ,
- the fuel pipe unions (**3**) on the fuel level sensor module.

F4R or K4M

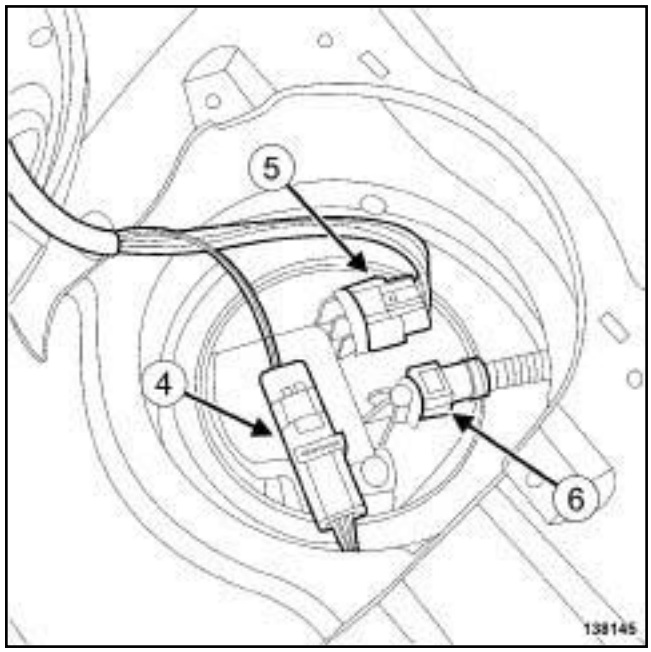

138145

❑ Unclip the fuel level sensor module connector (**4**) .

❑ Disconnect:

- the fuel level sensor module connectors (**4**) and (**5**) ,
- the fuel pipe union (**6**) on the fuel level sensor module.

❑ Remove:

- the silencer (see **19B**, **Exhaust**, **Silencer: Removal - Refitting**, page **19B-40**) .
- the connector pipe (see **19B**, **Exhaust**, **Connector pipe: Removal - Refitting**, page **19B-35**) .

F9Q or K9K

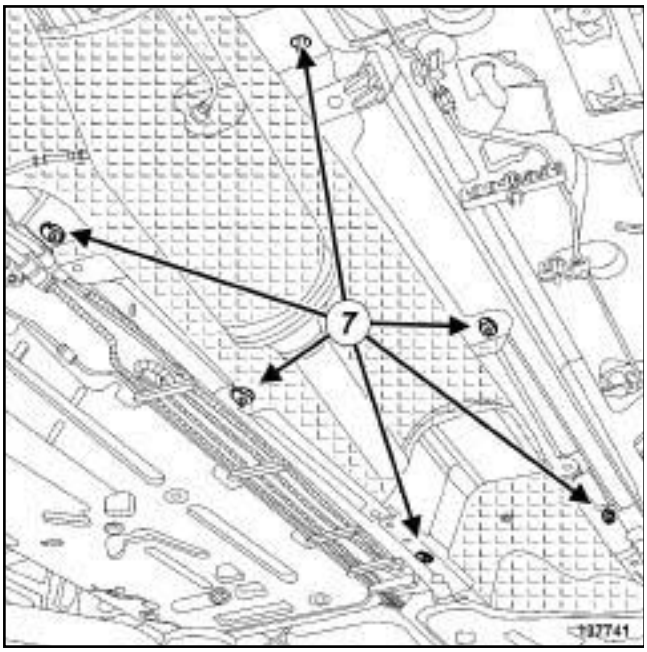

137741

❑ Remove:

- the centre heat shield clips (**7**) ,
- the centre heat shield.

F4R or K4M

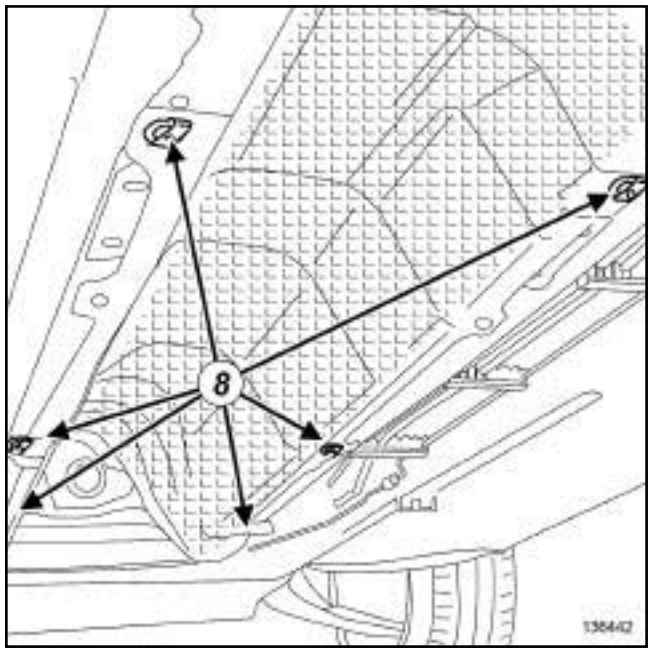

136442

❑ Remove:

- the centre heat shield clips (**8**) ,
- the centre heat shield.

F9Q or K9K

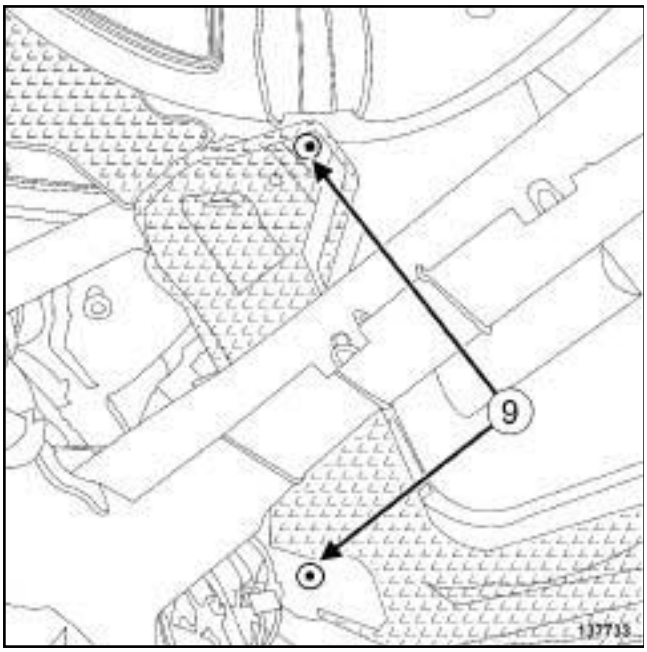

137733

❑ Remove:

- the rear heat shield bolts (**9**) ,
- the rear heat shield.

F4R or K4M

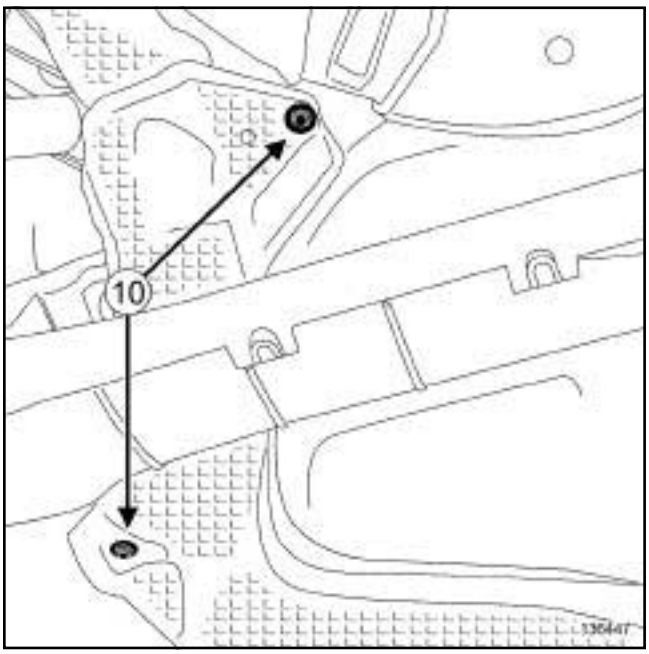

136447

❑ Remove:

- the rear heat shield bolts (**10**) ,
- the rear heat shield.

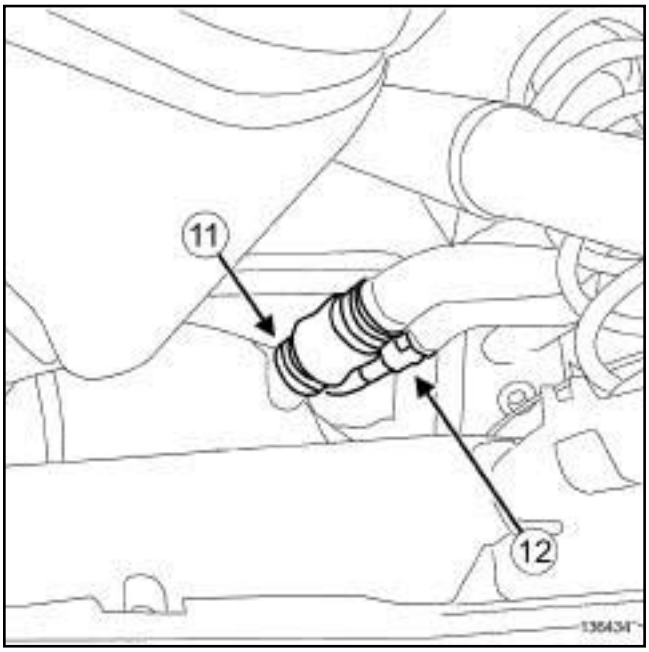

136434

❑ Remove the clip (**11**) from the « filler neck - fuel tank » connecting hose on the fuel tank side.

❑ Disconnect the anti-return pipe union (**12**) .

F9Q or K9K

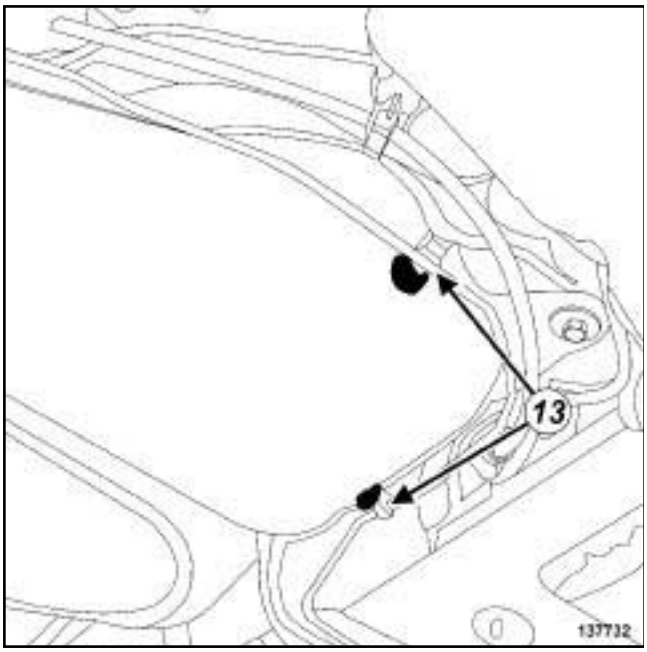

137732

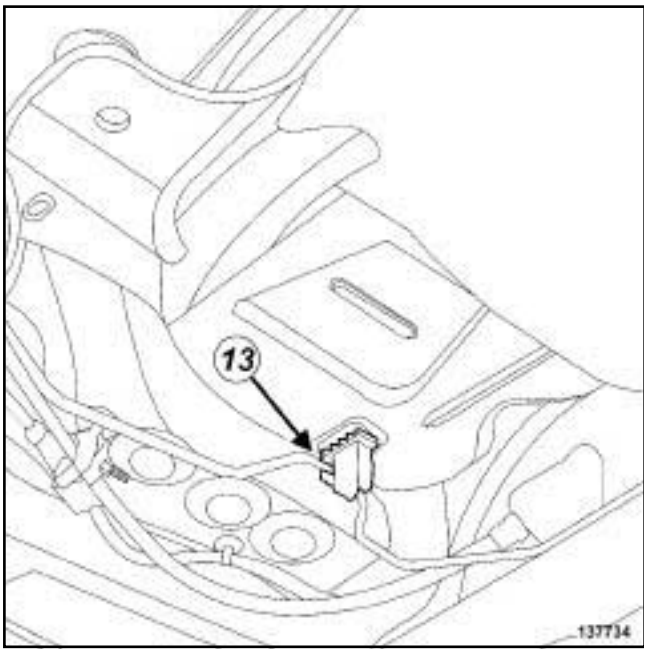

137734

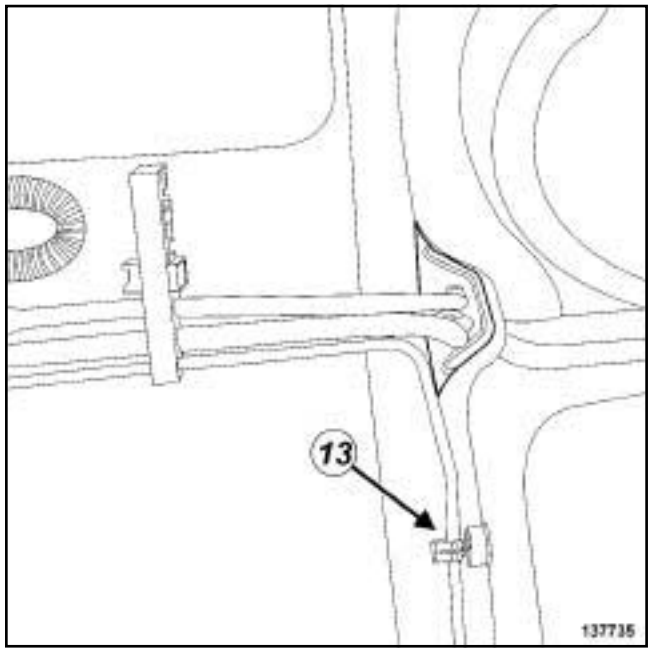

137735

❏ Unclip the rigid brake pipes (**13**) .

❏ Move the rigid brake pipes slightly to one side.

F4R or K4M

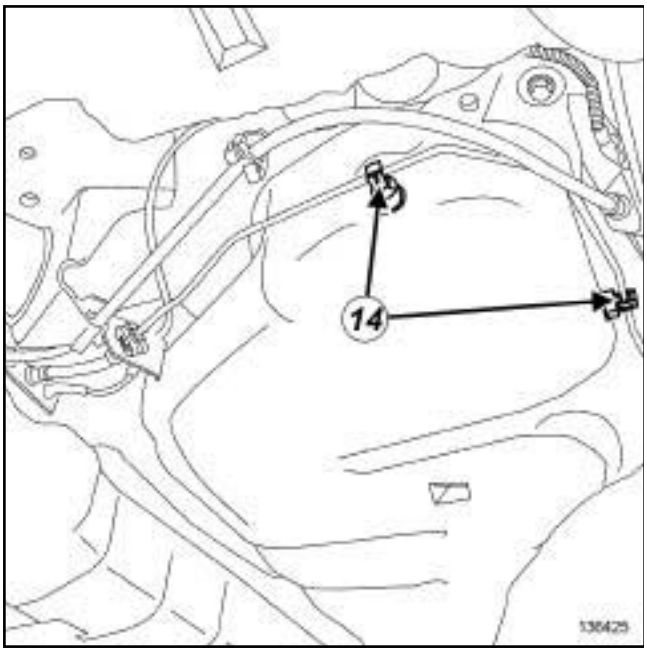

136425

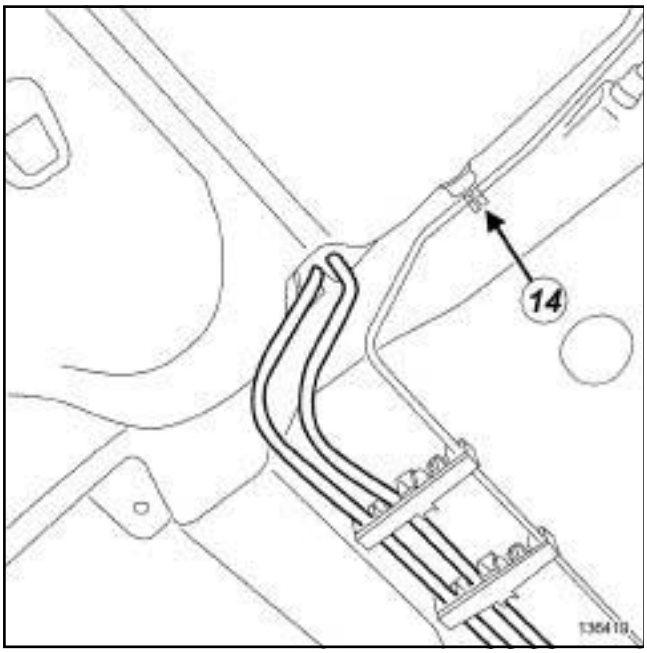

136419

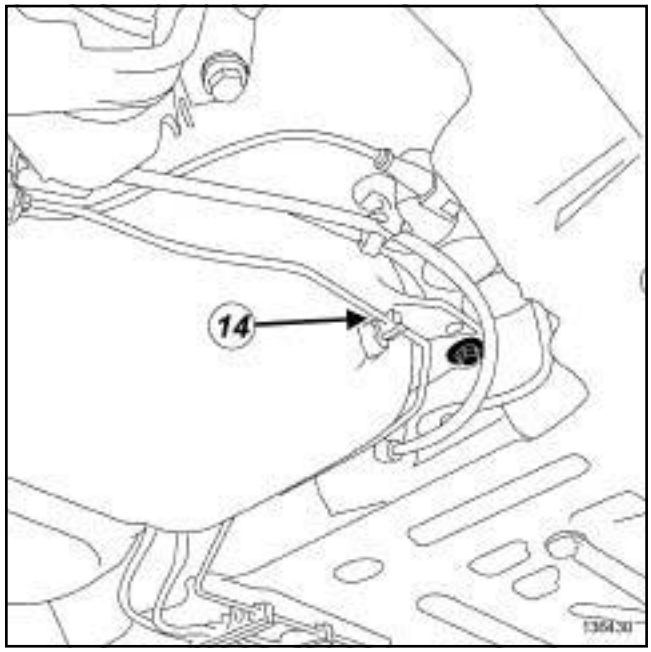

136430

❏ Unclip the rigid brake pipes (**14**) .

❏ Move the rigid brake pipes slightly to one side.

F9Q or K9K

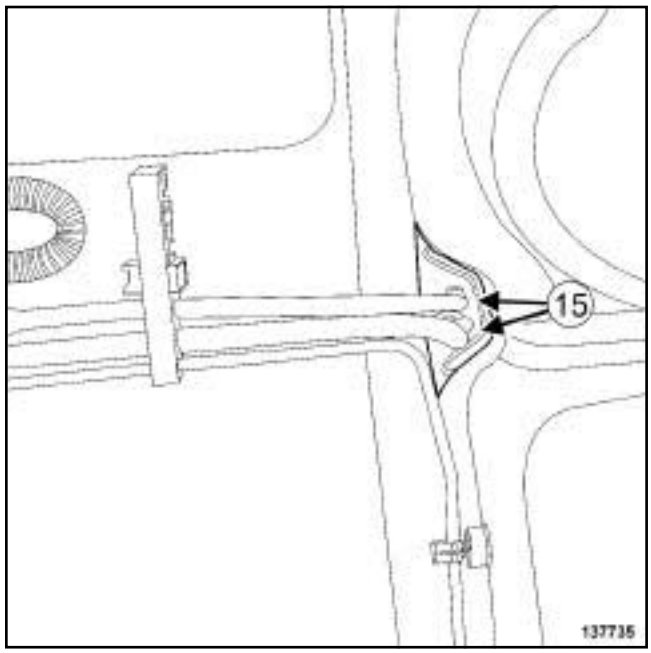

137735

❏ Unclip the fuel pipes (**15**) from the fuel tank.

❏ Move the fuel pipesto one side.

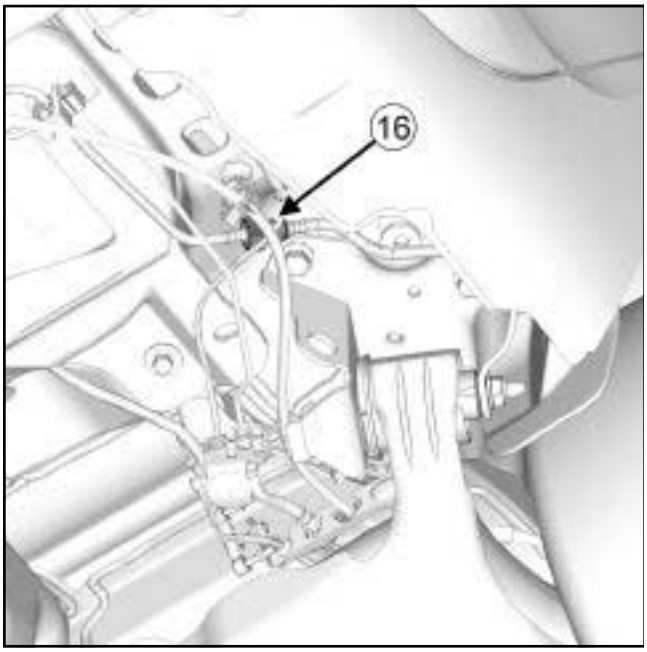

137977

❑ For vehicles equipped with a tank which has an off-set breather (tank with a breather pipe going from the tank to the wheel arch), disconnect the offset breather pipe (**16**) from the fuel tank.

F4R or K4M

136419

❑ Unclip the fuel pipes (**17**) from the fuel tank.

❑ Move the fuel pipesto one side.

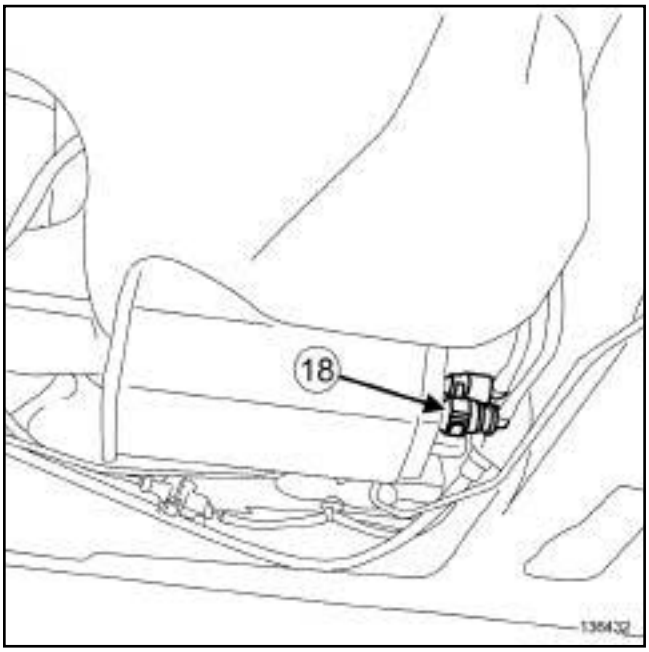

136432

❑ Disconnect the union of the fuel vapour absorber outlet pipe (**18**) .

❑ Move aside the fuel vapour absorber outlet pipe.

II - OPERATION FOR REMOVAL OF PART CONCERNED

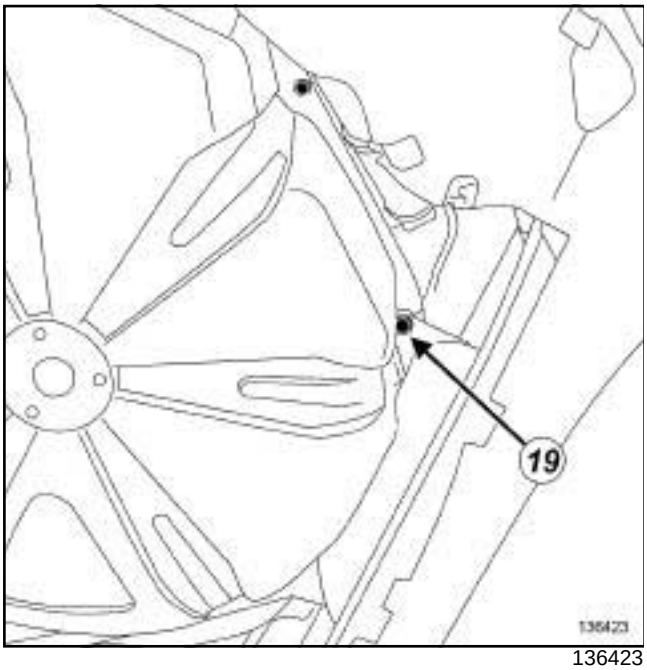

136423

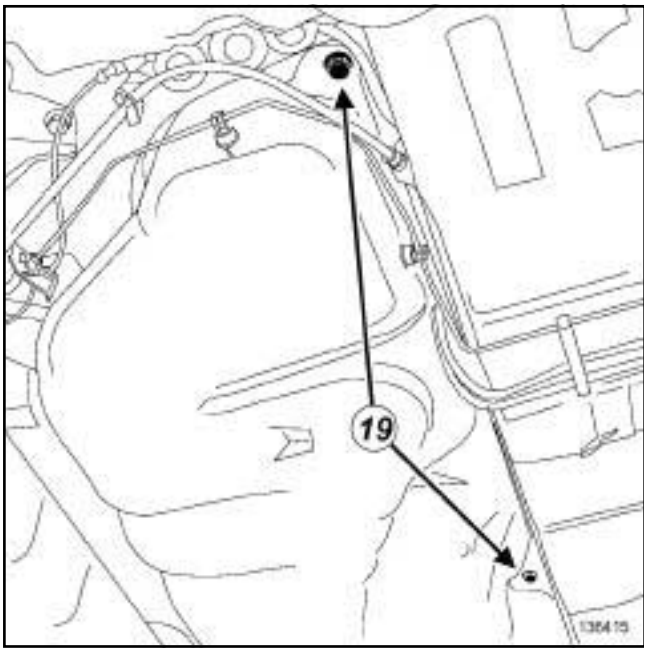

136415

- ❑ Disconnect the filler neck hose at the fuel tank end.
- ❑ Fit a **component support** under the fuel tank.
- ❑ Remove:
  - the fuel tank bolts (**19**) ,
  - the fuel tank.

If the fuel tank is being replaced

- ❑ Remove the fuel level sensor module (see **19C**, **Tank**, **Fuel level sensor module: Removal - Refitting**, page **19C-16**) .

REFITTING

I - REFITTING PREPARATION OPERATION

- ❑ **parts always to be replaced: Fuel pipe clip between the fuel tank filler neck and the fuel tank (11,08,01,05)**.

If the fuel tank is being replaced

- ❑ Refit the fuel level sensor module (see **19C**, **Tank**, **Fuel level sensor module: Removal - Refitting**, page **19C-16**) .

F9Q or K9K

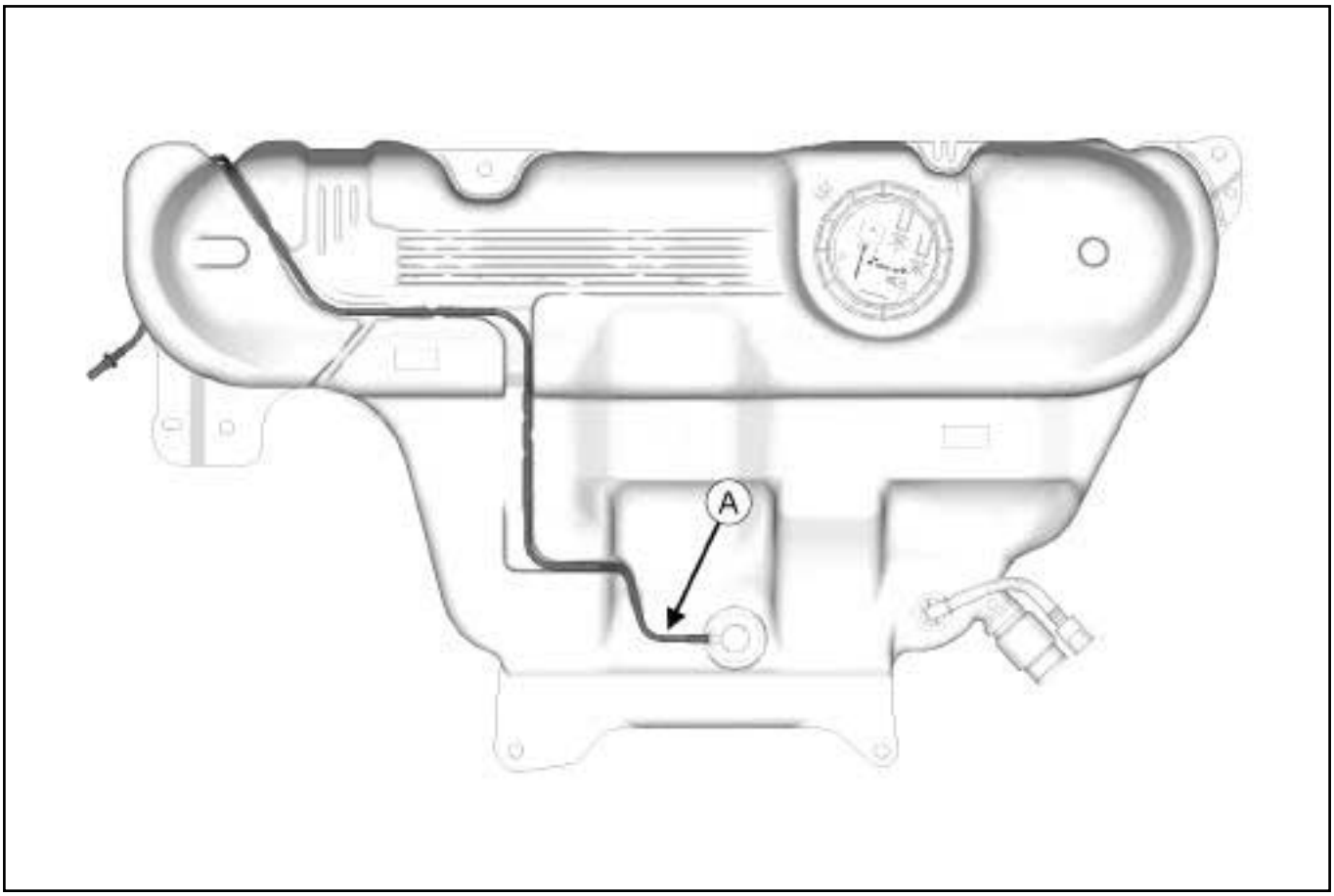

138085

- For vehicles equipped with a tank which does not have an offset breather (tank without a breather pipe going from the tank to the wheel arch), the new tank must be adapted by cutting the breather pipe at (**A**) with the tool **(Mot. 1352)**.

II - REFITTING OPERATION FOR PART CONCERNED

- Refit the fuel tank.
- Torque tighten the **fuel tank bolts (21 N.m)**.
- Connect the filler neck hose to the fuel tank.

F9Q or K9K

- For vehicles equipped with a tank which has an offset breather (tank with a breather pipe going from the tank to the wheel arch), connect the offset breather pipe of the fuel tank.

III - FINAL OPERATION

- Remove the **component support**.

F4R or K4M

- Fit the fuel vapour absorber outlet pipe.
- Connect the union of the fuel vapour absorber outlet pipe.

- Position the fuel pipes.
- Clip the fuel supply pipes onto the fuel tank.
- Fit the rigid brake pipes.
- Clip on the rigid brake pipes.
- Connect the anti-return pipe union.
- Refit a new clip on the fuel tank end of the « filler neck - fuel tank » connecting hose.
- Refit the rear heat shield.
- Torque tighten the **rear heat shield bolts (21 N.m)**.

❏ Refit:

- the central heat shield,
- the centre heat shield clips,
- the connector pipe (see **19B**, **Exhaust**, **Connector pipe: Removal - Refitting**, page **19B-35**) ,
- the silencer (see **19B**, **Exhaust**, **Silencer: Removal - Refitting**, page **19B-40**) .

F9Q or K9K

❏ Connect:

- the fuel pipe unions on the fuel level sensor module,
- the fuel level sensor module connector.

F4R or K4M

❏ Connect:

- the fuel pipe union on the fuel level sensor module,
- the fuel level sensor module connectors.

❏ Clip on the fuel level sensor module connector.

❏ Refit:

- the plastic blanking cover of the passenger compartment,
- the subframe panel.

❏ Refit the rear bench seat.

❏ Connect the battery (see **Battery : Removal - Refitting**) (80A, Battery).

Tightening torques ▽	
filler neck earth bolts	**21 N.m**

IMPORTANT

During this operation, be sure to:

- refrain from smoking or bringing red hot objects close to the working area,
- be careful of fuel splashes when disconnecting the union.

IMPORTANT

Wear goggles with side protectors for this operation.

IMPORTANT

Wear leaktight gloves (Nitrile type) for this operation.

WARNING

To avoid any corrosion or damage, protect the areas on which fuel is likely to run.

WARNING

Keep the pipe unions away from contaminated areas.

WARNING

To prevent impurities from entering the circuit, place protective plugs on all fuel circuit components exposed to the open air.

REMOVAL

I - REMOVAL PREPARATION OPERATION

❏ Position the vehicle on a two-post lift (see **Vehicle: Towing and lifting**) (02A, Lifting equipment).

❏ Disconnect the battery (see **Battery: Removal - Refitting**) (80A, Battery).

❏ Drain the fuel tank (see **19C**, **Tank**, **Fuel tank: Draining**, page **19C-1**) .

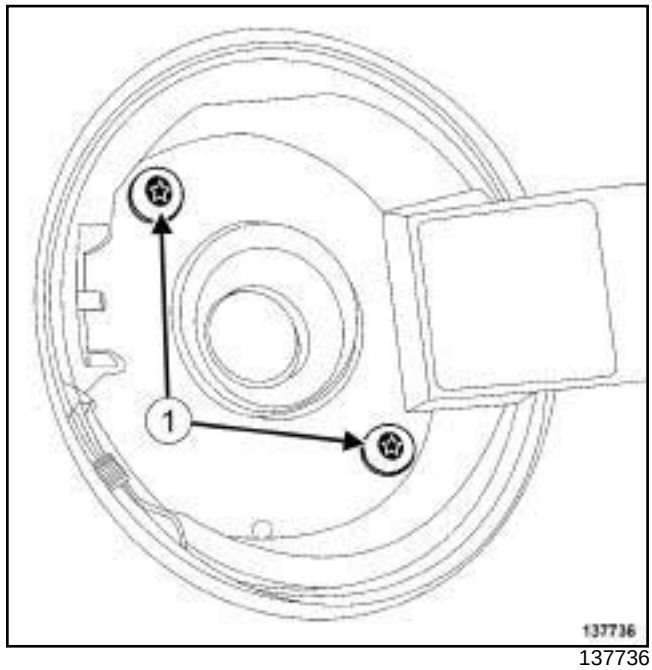

137736

❏ Open the fuel tank flap.

❏ Remove:

- the bolts (**1**) from the filler neck on the fuel tank flap,
- the rear right-hand wheel (see **Wheel: Removal - Refitting**) (35A, Wheels and tyres),
- the rear right-hand wheel arch liner (see **Rear wheel arch liner: Removal - Refitting**) (55A, Exterior protection).

II - OPERATION FOR REMOVAL OF PART CONCERNED

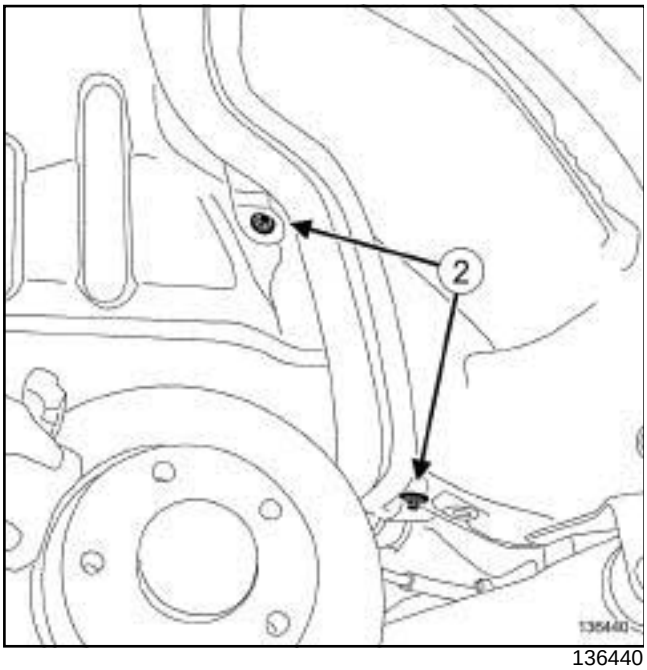

136440

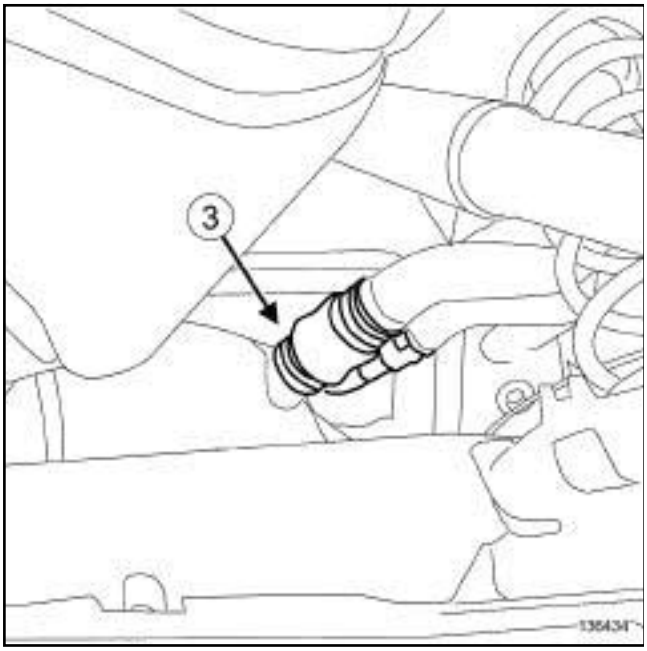

136434

- ❑ Remove the earth bolts (**2**) from the filler neck.
- ❑ Disconnect the anti-return pipe .
- ❑ Remove the clip (**3**) from the « filler neck - fuel tank » connecting hose on the fuel tank side.
- ❑ Disconnect the filler neck hose from the fuel tank.
- ❑ Remove the filler neck.

REFITTING

I - REFITTING PREPARATION OPERATION

- ❑ **parts always to be replaced: Fuel pipe clip between the fuel tank filler neck and the fuel tank (11,08,01,05)**.

II - REFITTING OPERATION FOR PART CONCERNED

- ❑ Refit the filler neck.
- ❑ Connect the filler neck hose to the fuel tank.
- ❑ Refit a new clip on the « filler neck - fuel tank » connecting hose.
- ❑ Disconnect the anti-return pipe.
- ❑ Refit the earth bolts on the filler neck.
- ❑ Torque tighten the **filler neck earth bolts (21 N.m)**.

III - FINAL OPERATION

- ❑ Refit:
  - the rear right-hand wheel arch liner (see **Rear wheel arch liner: Removal - Refitting**) (55A, Exterior protection),
  - the rear right-hand wheel (see **Wheel: Removal - Refitting**) (35A, Wheels and tyres),
  - the filler neck bolts on the fuel tank flap.
- ❑ Connect the battery (see **Battery: Removal - Refitting**) (80A, Battery).

Essential special tooling	
Mot. 1397	Universal petrol tank gauge nut wrench.

IMPORTANT

During this operation, be sure to:

- refrain from smoking or bringing red hot objects close to the working area,
- be careful of fuel splashes when disconnecting the union.

IMPORTANT

Wear leaktight gloves (Nitrile type) for this operation.

IMPORTANT

Wear goggles with side protectors for this operation.

WARNING

To prevent impurities from entering the circuit, place protective plugs on all fuel circuit components exposed to the open air.

WARNING

Keep the pipe unions away from contaminated areas.

REMOVAL

I - REMOVAL PREPARATION OPERATION

❏ Position the vehicle on the two-post lift (see **Vehicle: Towing and lifting**) (02A, Lifting equipment).

❏ Disconnect the battery (see **Battery: Removal - Refitting**) (80A, Battery).

❏ Drain the fuel tank (see **19C**, **Tank**, **Fuel tank: Draining**, page **19C-1**) .

❏ Raise the rear bench seat.

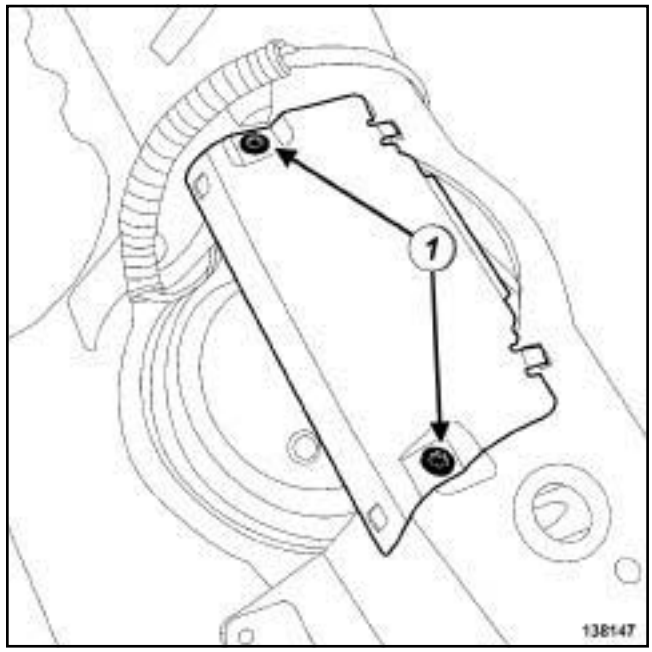

138147

❏ Remove:

- the subframe panel bolts (**1**) ,
- the subframe panel,
- the plastic blanking cover of the passenger compartment.

II - OPERATION FOR REMOVAL OF PART CONCERNED

F9Q or K9K

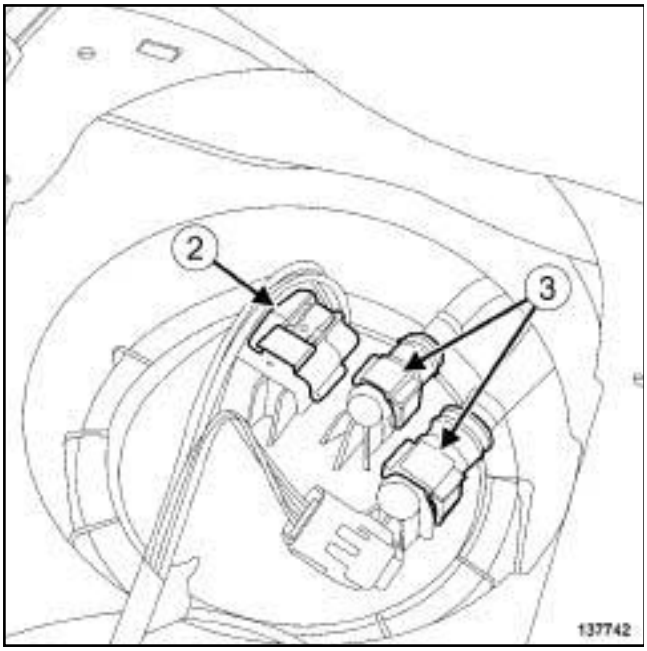

137742

❑ Disconnect:

- the fuel level sensor module connector (**2**) ,
- the fuel pipe unions (**3**) from the fuel level sensor module.

F4R or K4M

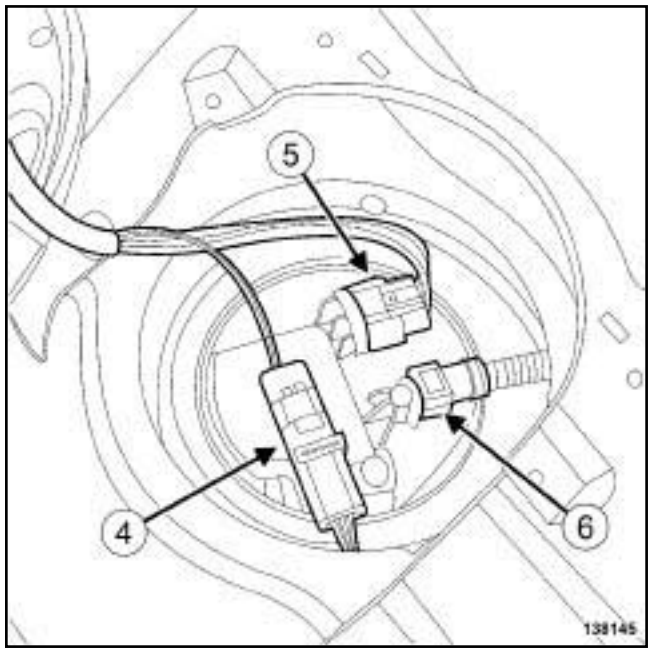

138145

❑ Unclip the fuel level sensor module connector (**4**) .

❑ Disconnect:

- the fuel level sensor module connectors (**4**) and (**5**) ,
- the fuel pipe union (**6**) from the fuel level sensor module.

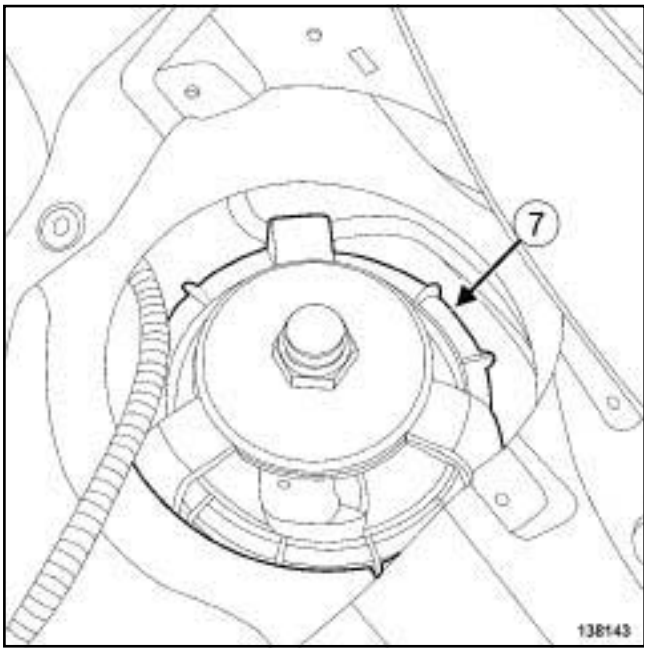

138143

❏ Remove the fuel level sensor module nut (**7**) using the tool **(Mot. 1397)**.

❏ Let the fuel drain from the fuel level sensor module.

> **WARNING**
> To prevent the tank from deforming, refit the fuel sender unit nut to the tank well immediately.

❏ Remove:

- the fuel level sensor module, taking care not to damage the float,
- the fuel level sensor module seal.

REFITTING

I - REFITTING PREPARATION OPERATION

❏ **parts always to be replaced: Fuel level sensor module nut (11,08,02,05)**.

❏ **parts always to be replaced: Fuel level sensor module seal (11,08,02,06)**.

II - REFITTING OPERATION FOR PART CONCERNED

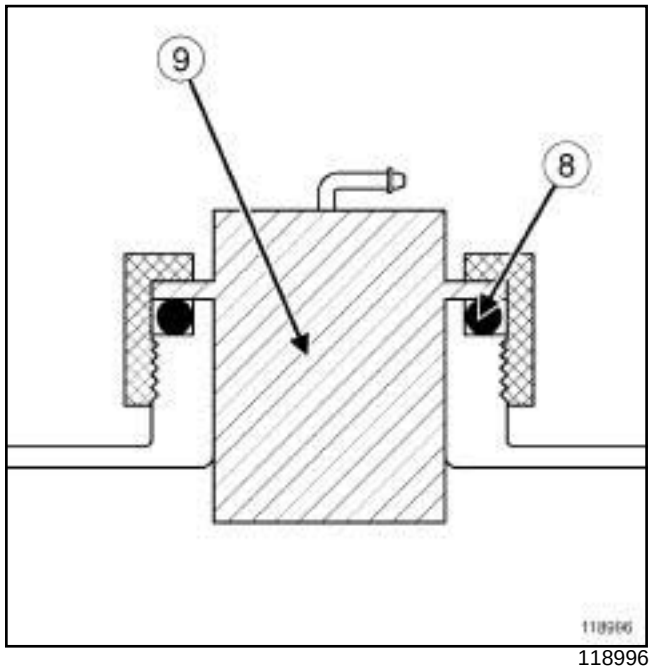

118996

❏ Position:

- the new seal (**8**) in the neck correctly,
- the fuel level sensor module (**9**) on the fuel tank. A lug on the fuel level sensor module and a recess in the fuel tank ensure correct positioning in the fuel tank.

❏ Use a hand to press the fuel level sensor module to grip the seal.

❏ Refit a new nut on the fuel tank.

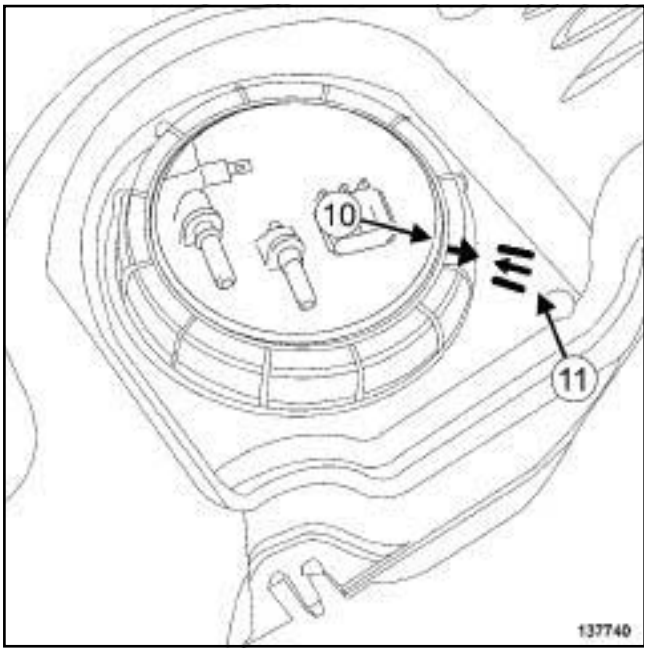

137740

❑ Tighten the fuel level sensor module nut using the tool **(Mot. 1397)** until the nut mark (**10**) corresponds with the fuel tank mark (**11**) .

F9Q or K9K

❑ Connect:

- the fuel pipe unions on the fuel level sensor module,
- the fuel level sensor module connector.

F4R or K4M

❑ Connect:

- the fuel pipe union on the fuel level sensor module,
- the fuel level sensor module connectors.

❑ Clip on the fuel level sensor module connector.

III - FINAL OPERATION

❑ Refit:

- the plastic blanking cover of the passenger compartment,
- the subframe panel of the fuel level sensor module.

❑ Refit the rear bench seat.

❑ Connect the battery (see **Battery: Removal - Refitting**) (80A, Battery).

F9Q

Essential special tooling	
Mot. 1453	Multiple-adjusting engine mounting support with retaining straps.
Mot. 1453-01	Additional winder nut on engine lift support Mot. 1453.

Tightening torques ▽	
gearbox mounting bolts on the suspended engine mounting	**62 N.m**
bolts of the suspended engine mounting support on the body	**62 N.m**
central bolt for the suspended engine mounting rubber pad support	**105 N.m**

REMOVAL

I - REMOVAL PREPARATION OPERATION

❑ Position the vehicle on a two-post lift (see **Vehicle: Towing and lifting**) (02A, Lifting equipment).

❑ Remove:

- the engine cover,
- the engine undertray bolts,
- the engine undertray,
- the windscreen wiper arms (see **Windscreen wiper arm: Removal - Refitting**) (85A, Wiping - Washing),
- the scuttle panel grille (see **Scuttle panel grille: Removal - Refitting**) (56A, Exterior equipment),
- the scoop under the scuttle panel grille (see **Scoop under scuttle panel grille: Removal - Refitting**) (56A, Exterior equipment),
- the battery (see **Battery: Removal - Refitting**) (80A, Battery),
- the battery tray (see **Battery tray: Removal - Refitting**) (80A, Battery),
- the air filter unit (see **12A**, **Fuel mixture**, **Air filter unit: Removal - Refitting**, page **12A-4**) ,
- the lower engine tie-bar (see **19D**, **Engine mounting**, **Lower engine tie-bar: Removal - Refitting**, page **19D-33**) .

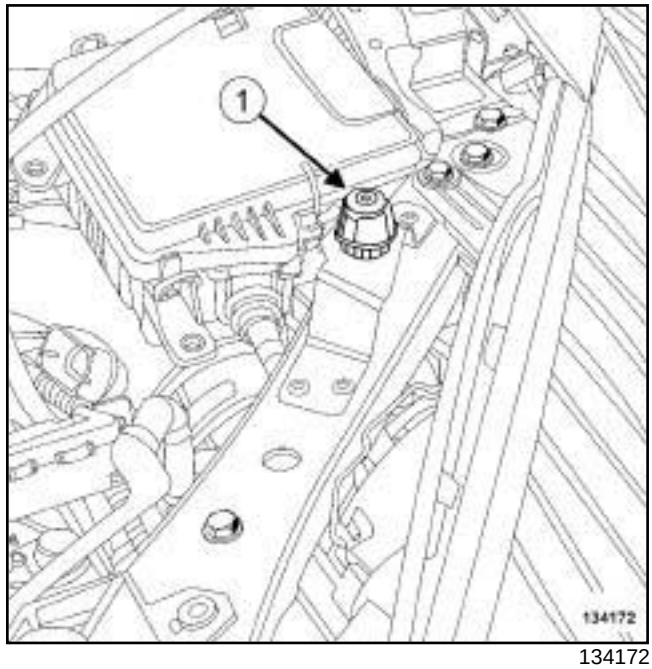

134172

❑ Remove the front left-hand bonnet stop (**1**) .

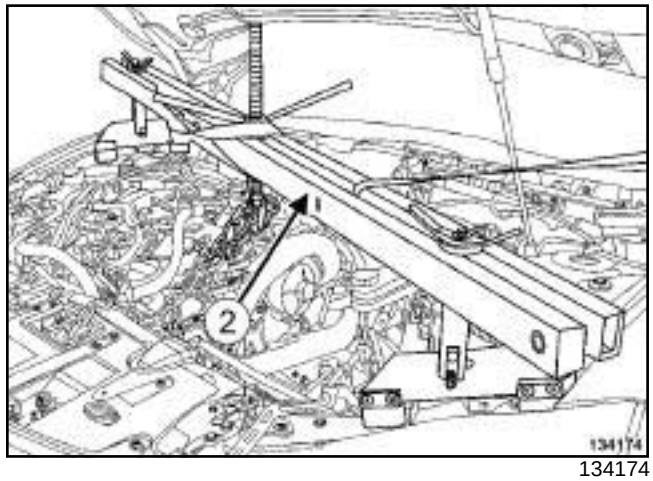

134174

❑ Position the **(Mot. 1453)** and **(Mot. 1453-01)** (**2**) .

❑ Mark the position of the left-hand suspended engine mounting on the body.

F9Q

II - OPERATION FOR REMOVAL OF PART CONCERNED

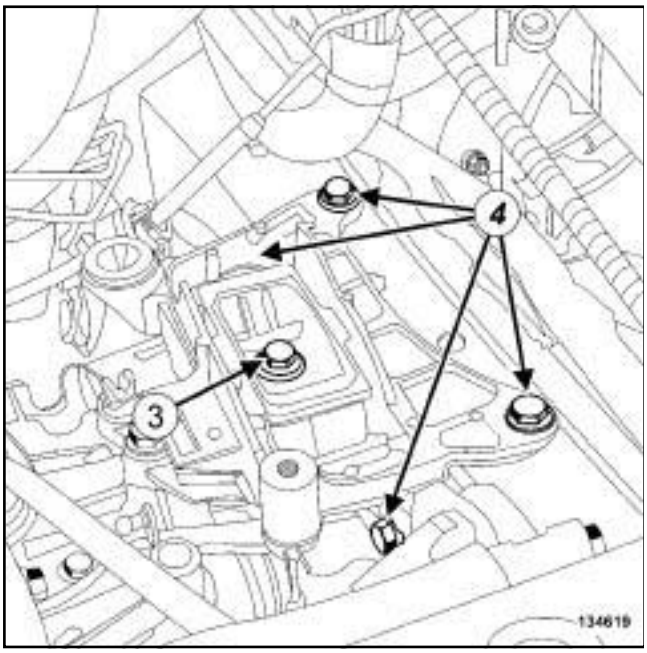

134619

- ❑ Remove the central bolt (**3**) from the suspended engine mounting rubber pad support.
- ❑ Gently lower the engine until the rubber pad detaches.
- ❑ Remove:
  - the bolts (**4**) from the suspended engine mounting support on the body,
  - the suspended engine mounting support on the body.

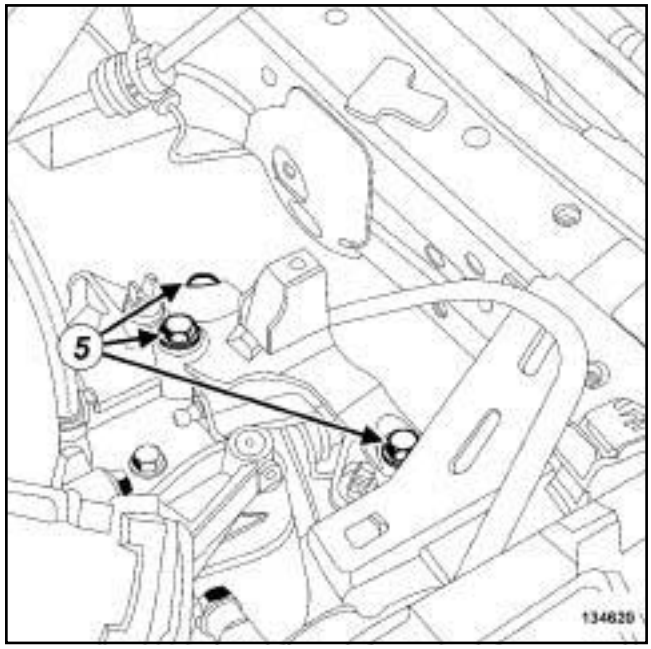

134620

- ❑ Remove:
  - the gearbox mounting bolts (**5**) from the suspended engine mounting,
  - the gearbox mounting from the suspended engine mounting.

REFITTING

I - REFITTING OPERATION FOR PART CONCERNED

- ❑ Refit the gearbox mounting on the suspended engine mounting.
- ❑ Torque tighten the **gearbox mounting bolts on the suspended engine mounting (62 N.m)**.
- ❑ Refit the mounting on the suspended engine mounting body.
- ❑ Torque tighten the **bolts of the suspended engine mounting support on the body (62 N.m)**.
- ❑ Refit the central bolt for the suspended engine mounting rubber pad support.
- ❑ Torque tighten the **central bolt for the suspended engine mounting rubber pad support (105 N.m)**.

II - FINAL OPERATION

- ❑ Remove the **(Mot. 1453)** and **(Mot. 1453-01)**.
- ❑ Refit:
  - the front left-hand bonnet stop,

F9Q

- the lower engine tie-bar (see **19D**, **Engine mounting**, **Lower engine tie-bar: Removal - Refitting**, page **19D-33**) ,
- the air filter unit (see **12A**, **Fuel mixture**, **Air filter unit: Removal - Refitting**, page **12A-4**) ,
- the battery tray (see **Battery tray: Removal - Refitting**) (80A, Battery),
- the battery (see **Battery : Removal - Refitting**) (80A, Battery),
- the scoop under the scuttle panel grille (see **Scoop under scuttle panel grille: Removal - Refitting**) (56A, Exterior equipment),
- the scuttle panel grille (see **Scuttle panel grille: Removal - Refitting**) (56A, Exterior equipment),
- the windscreen wiper arms (see **Windscreen wiper arm: Removal - Refitting**) (85A, Wiping - Washing),
- the engine undertray,
- the engine cover.

K4M

Essential special tooling	
Mot. 1453	Multiple-adjusting engine mounting support with retaining straps.
Mot. 1453-01	Additional winder nut on engine lift support Mot. 1453.

Tightening torques ▽	
left-hand suspended engine mounting rubber pad support bolts	**62 Nm**
bolts for the suspended engine mounting rubber pad cover	**62 N.m**
central bolt for the left-hand suspended engine mounting rubber pad support	**62 N.m**

REMOVAL

I - REMOVAL PREPARATION OPERATION

❑ Position the vehicle on a two-post lift (see **Vehicle: Towing and lifting**) (02A, Lifting equipment).

❑ Remove:

- the engine cover,
- the windscreen wiper arms (see **Windscreen wiper arm: Removal - Refitting**) (85A, Wiping - Washing),
- the scuttle panel grille (see **Scuttle panel grille: Removal - Refitting**) (56A, Exterior equipment),
- the scoop under the scuttle panel grille (see **Scoop under scuttle panel grille: Removal - Refitting**) (56A, Exterior equipment),
- the battery (see **Battery: Removal - Refitting**) (80A, Battery),
- the battery tray (see **Battery tray: Removal - Refitting**) (80A, Battery),
- the air filter unit (see **12A**, **Fuel mixture**, **Air filter unit: Removal - Refitting**, page **12A-4**) ,
- the lower engine tie-bar (see **19D**, **Engine mounting**, **Lower engine tie-bar: Removal - Refitting**, page **19D-33**) .

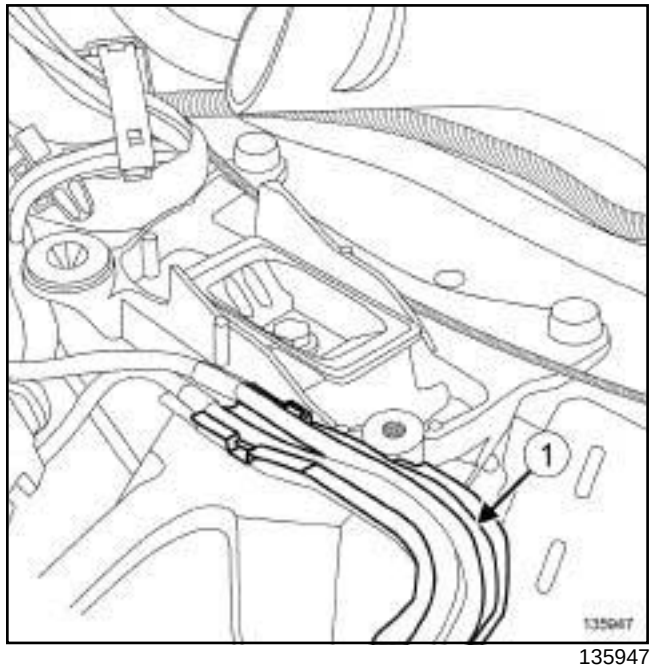

135947

❑ Unclip the battery wiring channel (**1**) .

❑ Move aside the battery wiring channel.

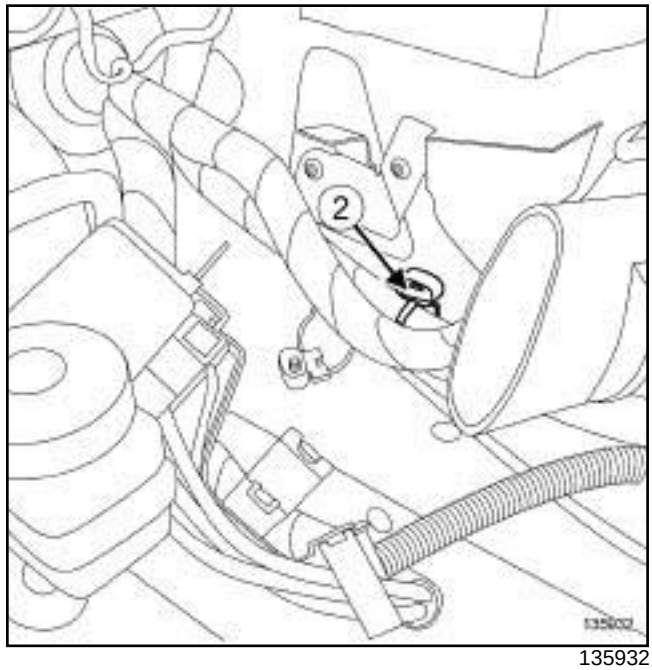

135932

❑ Unclip the engine wiring at (**2**) .

K4M

K4M, and 858 or 866

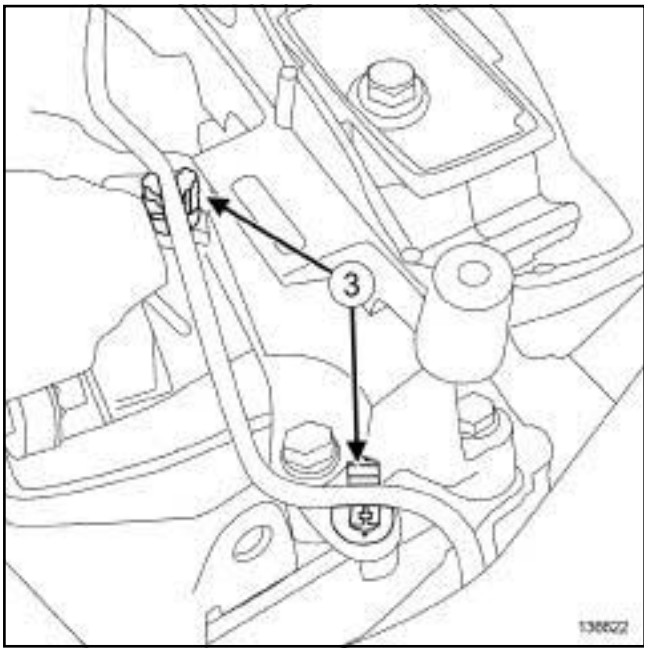

136622

❑ Unclip the hydraulic clutch pipe from the left-hand suspended engine mounting cover at (**3**) .

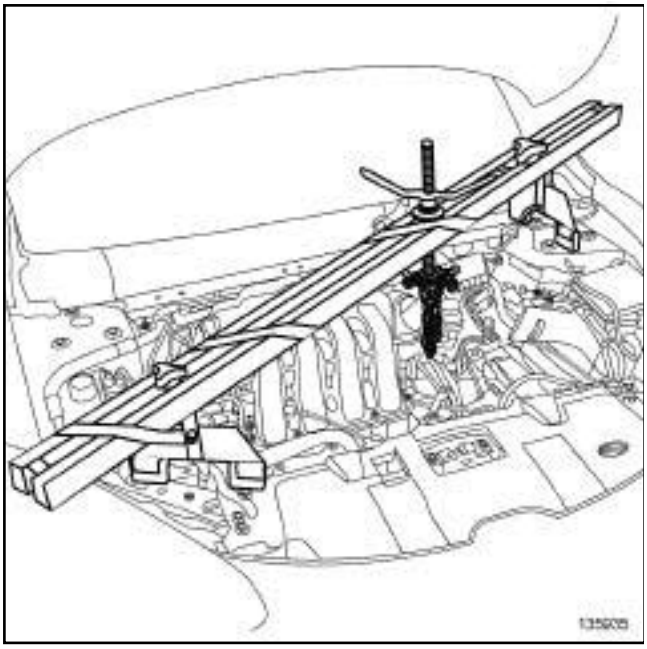

135935

❑ Fit the **(Mot. 1453)** fitted with the **(Mot. 1453-01)**.

II - OPERATION FOR REMOVAL OF PART CONCERNED

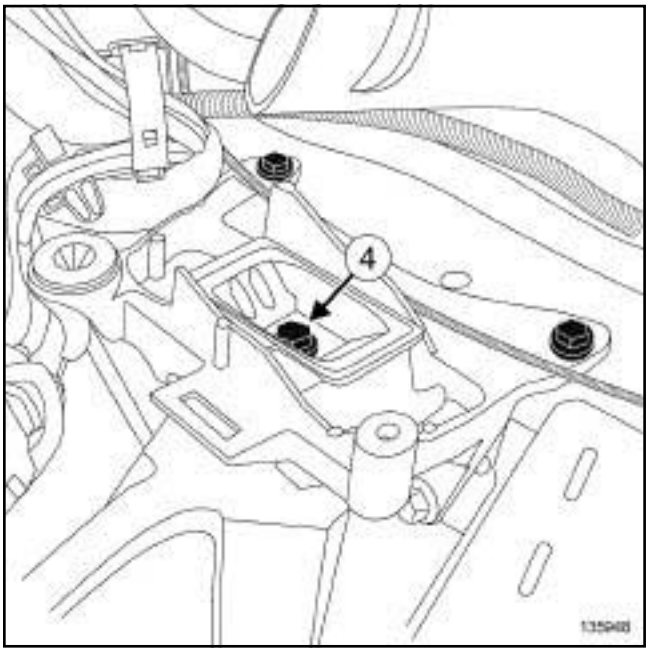

135948

❑ Remove the central bolt (**4**) from the support of the left-hand suspended engine mounting rubber pad.

❑ Gently lower the engine until the rubber pad detaches.

K4M, and 848

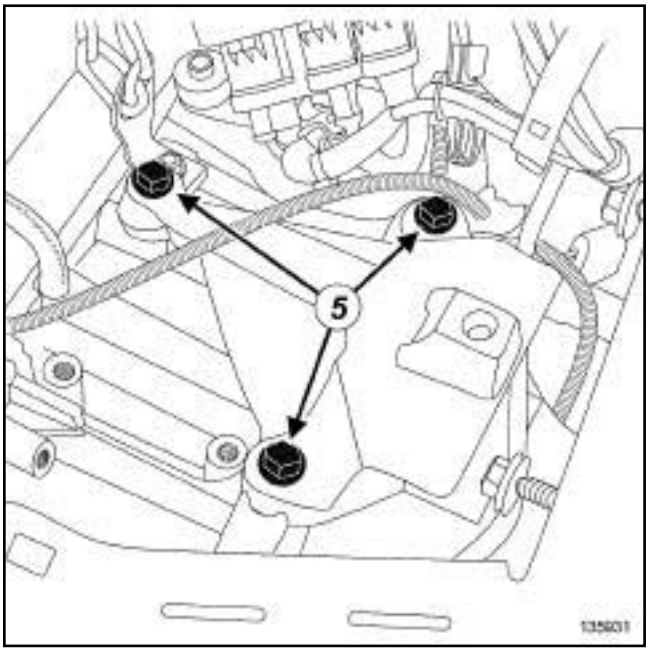

135931

❑ Remove:

- the bolts (**5**) for the left-hand suspended engine mounting rubber pad cover,

K4M

- the cover from the left-hand suspended engine mounting rubber pad.

K4M, and 858 or 866

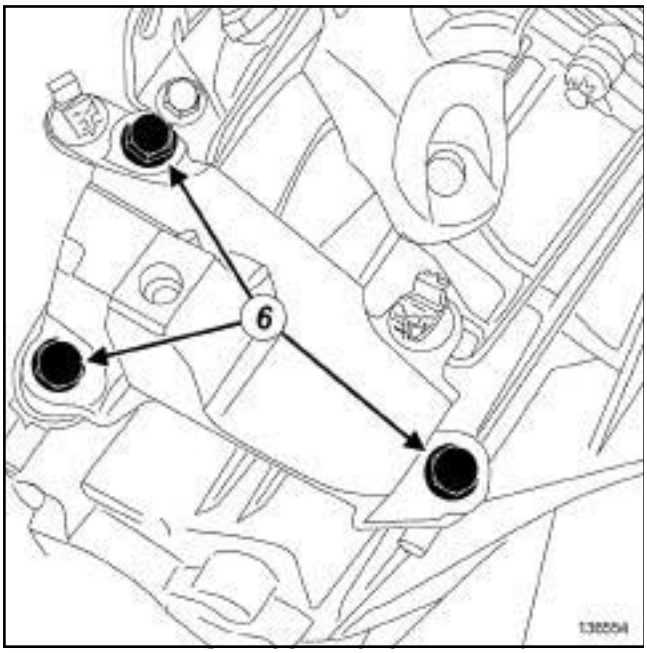

136554

❑ Remove:

- the bolts (**6**) for the left-hand suspended engine mounting rubber pad cover,
- the cover from the left-hand suspended engine mounting rubber pad.

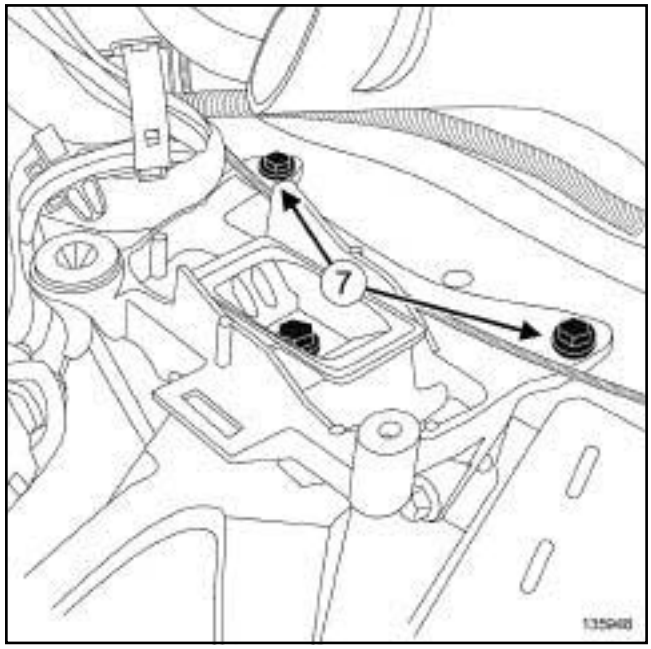

135948

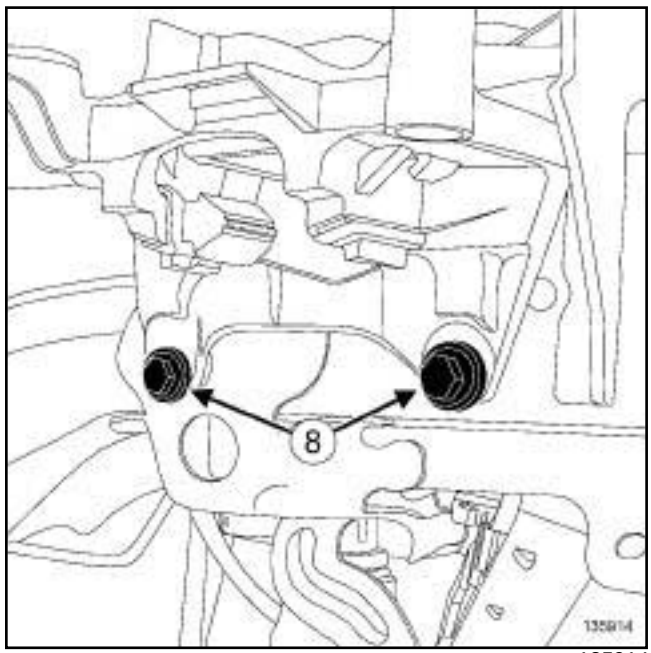

135914

❑ Remove the bolts (**7**) from the left-hand suspended engine mounting rubber pad support.

❑ Loosen the bolts (**8**) of the left-hand suspended engine mounting rubber pad support.

❑ Remove the rubber pad support from the left-hand suspended engine mounting.

K4M

REFITTING

I - REFITTING OPERATION FOR PART CONCERNED

❑ Refit the rubber pad support for the left-hand suspended engine mounting.

❑ Torque tighten the **left-hand suspended engine mounting rubber pad support bolts (62 Nm)**.

❑ Refit the cover for the left-hand suspended engine mounting.

❑ Torque tighten the **bolts for the suspended engine mounting rubber pad cover (62 N.m)**.

❑ Refit the central bolt for the left-hand suspended engine mounting rubber pad support.

❑ Torque tighten the **central bolt for the left-hand suspended engine mounting rubber pad support (62 N.m)**.

II - FINAL OPERATION

❑ Remove the **(Mot. 1453)** fitted with the **(Mot. 1453-01)**.

K4M, and 858 or 866

❑ Clip the hydraulic clutch pipe onto the cover of the left-hand suspended engine mounting.

❑ Clip on the engine wiring.

❑ Fit the battery wiring channel.

❑ Clip on the battery wiring channel.

❑ Refit:

- the lower engine tie-bar (see **19D**, **Engine mounting**, **Lower engine tie-bar: Removal - Refitting**, page **19D-33**) ,
- the air filter unit (see **12A**, **Fuel mixture**, **Air filter unit: Removal - Refitting**, page **12A-4**) ,
- the battery tray (see **Battery tray: Removal - Refitting**) (80A, Battery),
- the battery (see **Battery: Removal - Refitting**) (80A, Battery),
- the scoop under the scuttle panel grille (see **Scoop under scuttle panel grille: Removal - Refitting**) (56A, Exterior equipment),
- the scuttle panel grille (see **Scuttle panel grille: Removal - Refitting**) (56A, Exterior equipment),
- the windscreen wiper arms (see **Windscreen wiper arm: Removal - Refitting**) (85A, Wiping - Washing),
- the engine cover.

K9K

Essential special tooling	
Ms. 583	Hose clamp pliers.
Mot. 1453	Multiple-adjusting engine mounting support with retaining straps.
Mot. 1453-01	Additional winder nut on engine lift support Mot. 1453.

Essential equipment
safety strap(s)
indelible pencil

Tightening torques ▽	
support bolts for the left-hand suspended engine mounting on the gearbox	**62 N.m**
support bolts for the left-hand suspended engine mounting on the body	**62 N.m**
support bolt for the left-hand suspended engine mounting on the gearbox62	**N.m**
upper engine tie-bar bolt on the engine	**115 N.m**
upper engine tie-bar bolt on the body	**105 N.m**
lower engine tie-bar bolt on the subframe	**180 N.m**
lower engine tie-bar bolt on the lower engine tie-bar support	**180 N.m**

REMOVAL

I - REMOVAL PREPARATION OPERATION

❑ Position the vehicle on a two-post lift (see **Vehicle: Towing and lifting**) (02A, Lifting equipment).

❑ Remove:

- the battery (see **Battery: Removal - Refitting**) (80A, Battery),
- the battery tray (see **Battery tray: Removal - Refitting**) (80A, Battery),
- the air filter unit (see **12A**, **Fuel mixture**, **Air filter unit: Removal - Refitting**, page **12A-4**) ,
- the engine undertray bolts,
- the engine undertray.

K9K, and 832

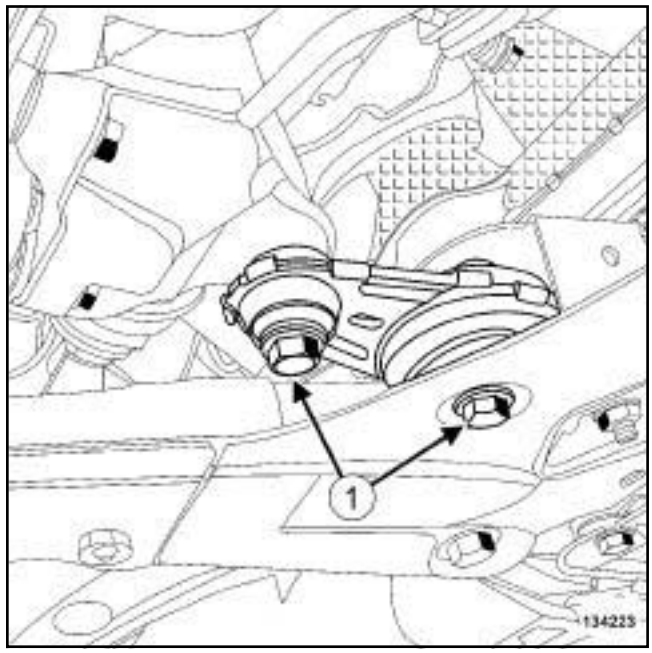

134223

❑ Remove:

- the bolts (**1**) from the lower engine tie-bar,
- the lower engine tie-bar.

K9K, and 830 or 834

❑ Remove the lower engine tie-bar (see **19D**, **Engine mounting**, **Lower engine tie-bar: Removal - Refitting**, page **19D-33**) .

❑ Remove:

- the windscreen wiper arms (see **Windscreen wiper arm: Removal - Refitting**) (85A, Wiping - Washing),
- the scuttle panel grille (see **Scuttle panel grille: Removal - Refitting**) (56A, Exterior equipment),

K9K

- the scoop under the scuttle panel grille (see **Scoop under scuttle panel grille: Removal - Refitting**) (56A, Exterior equipment).

K9K, and 832

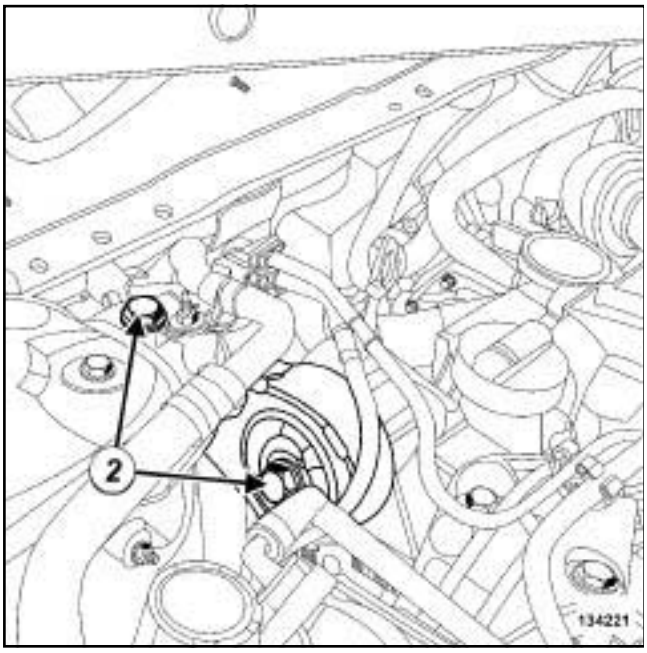

134221

❑ Remove:

- the upper engine tie-bar bolts (**2**) ,
- the upper engine tie-bar,

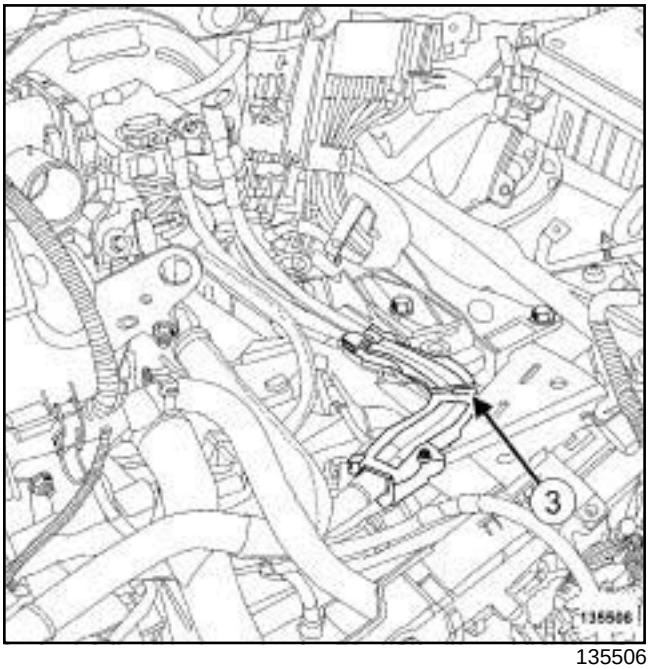

135506

❑ Unclip the battery wiring channel from the left-hand suspended engine mounting (**3**) .

❑ Remove the battery wiring channel from the left-hand suspended engine mounting.

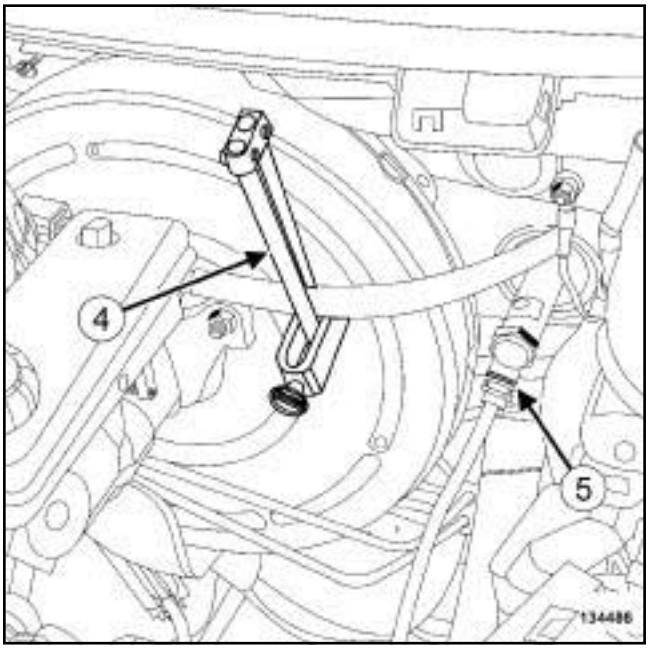

134486

❑ Fit the tool **(Ms. 583)** (**4**) onto the clutch master cylinder supply hose.

❑ Disconnect the hydraulic clutch pipe from the clutch master cylinder by pulling on the clip (**5**) .

K9K

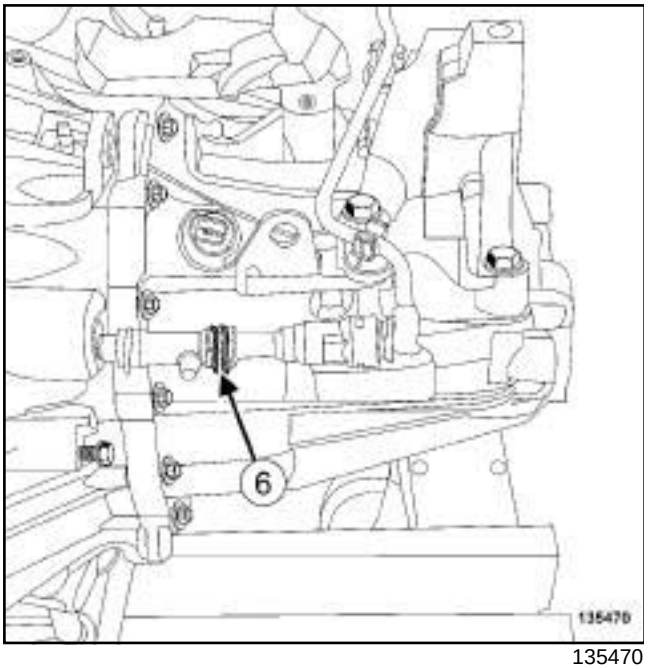

135470

- Disconnect the hydraulic clutch pipe from the hydraulic clutch release bearing by pulling on the clips (**6**) .
- Fit suitable blanking plugs on:
  - the opening of the hydraulic clutch release bearing,
  - the openings of the hydraulic clutch pipe,
  - the opening of the clutch master cylinder.

K9K, and 832

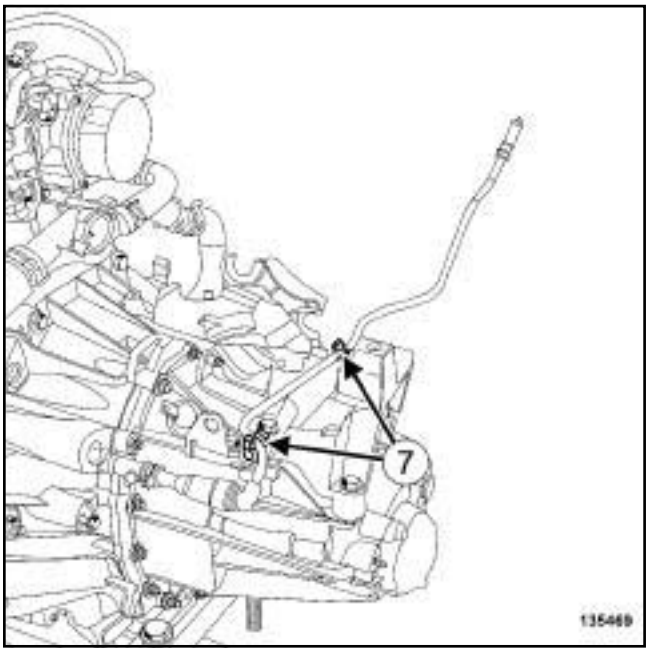

135469

- Unclip the hydraulic clutch pipe from the left-hand suspended engine mounting at (**7**) .

K9K

K9K, and 830 or 834

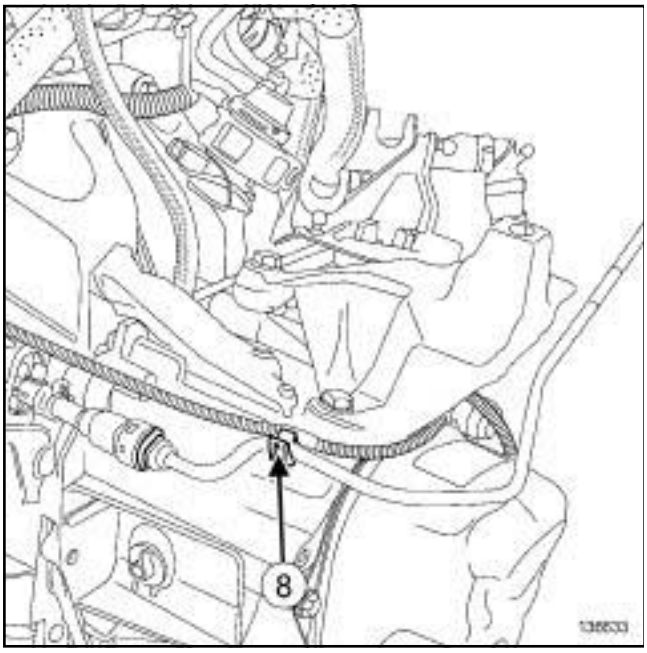

136633

❑ Unclip the hydraulic clutch pipe from the left-hand suspended engine mounting at (**8**) .

❑ Remove the hydraulic clutch pipe.

II - OPERATION FOR REMOVAL OF PART CONCERNED

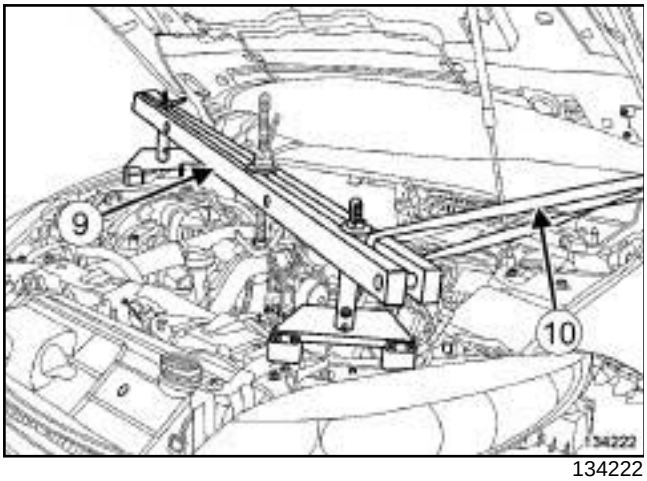

134222

❑ Fit the **(Mot. 1453)** fitted with the **(Mot. 1453-01)** (**9**) with a **safety strap(s)** (**10**) .

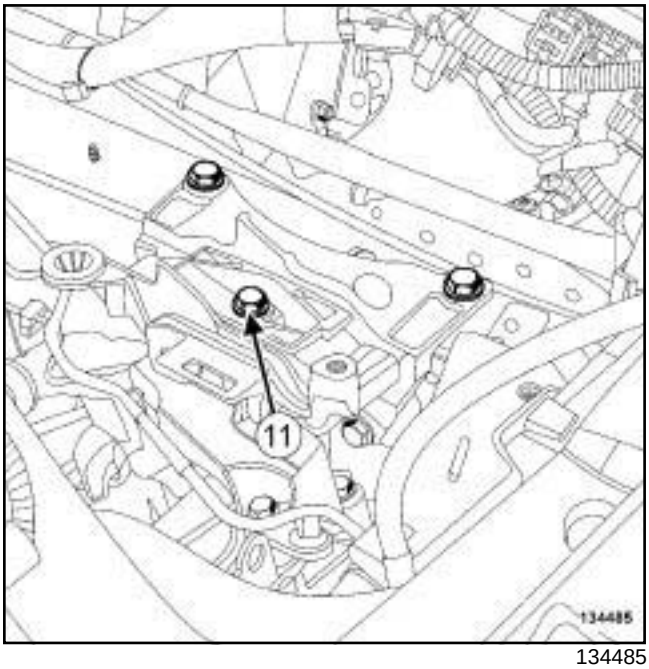

134485

❑ Remove the left-hand suspended engine mounting support bolt (**11**) on the gearbox.

❑ Detach the support on the gearbox from the left-hand suspended engine mounting.

❑ Mark the position of the left-hand suspended engine mounting support on the body using a **indelible pencil**.

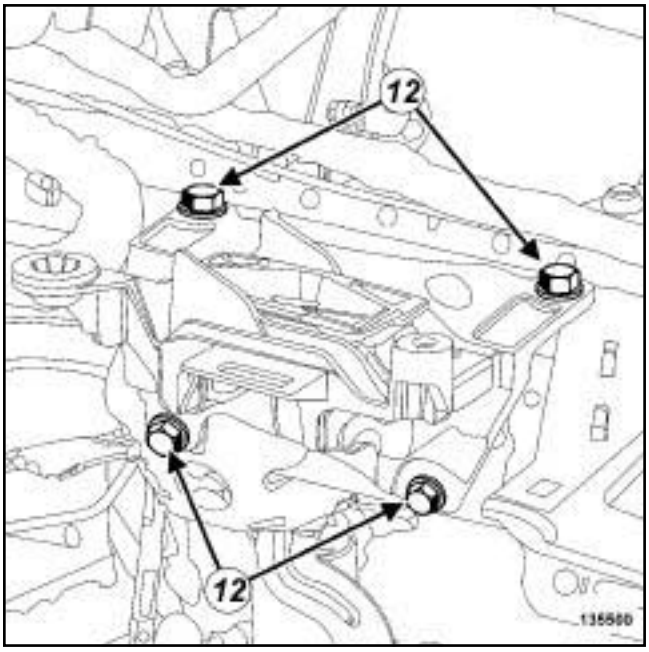

135500

❑ Remove:

- the bolts (**12**) from the left-hand suspended engine mounting support on the body,

K9K

- the left-hand suspended engine mounting support on the body.

K9K, and 832

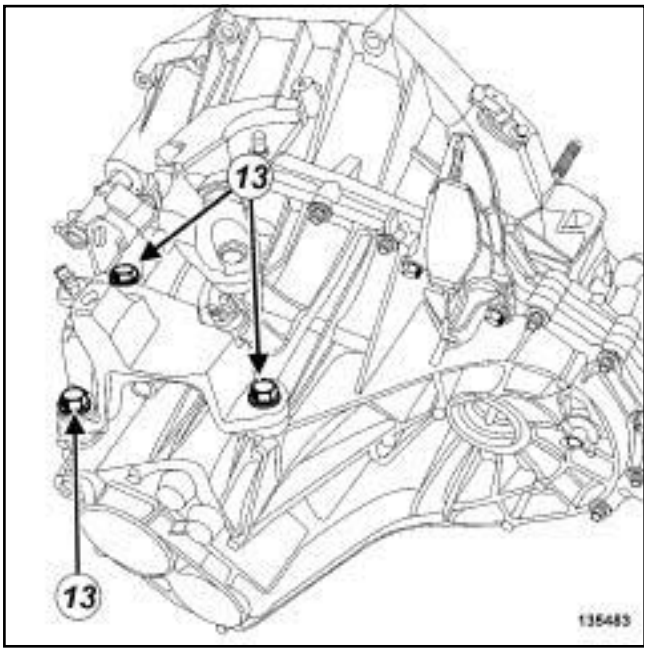

135483

❑ Remove:

- the left-hand suspended engine mounting support bolts (**13**) on the gearbox,
- the left-hand suspended engine mounting support on the gearbox.

K9K, and 830 or 834

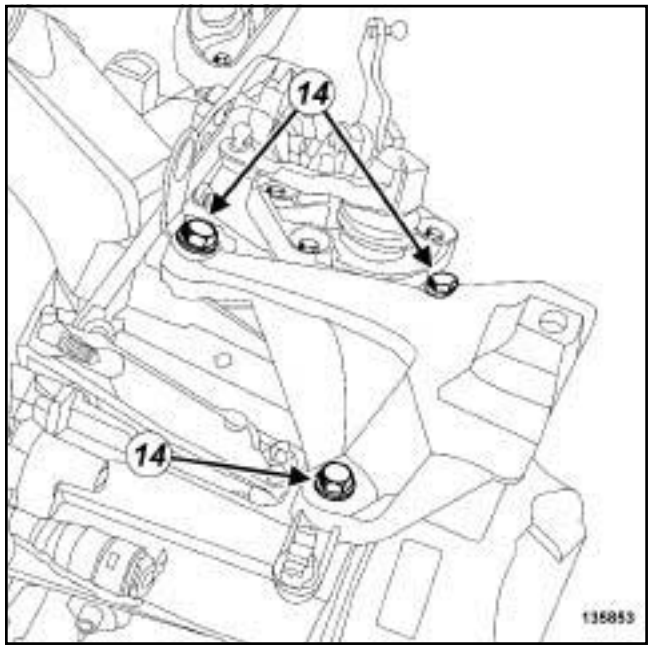

135853

❑ Remove:

- the left-hand suspended engine mounting support bolts (**14**) on the gearbox,
- the left-hand suspended engine mounting support on the gearbox.

REFITTING

I - REFITTING OPERATION FOR PART CONCERNED

❑ Refit the left-hand suspended engine mounting support on the gearbox.

❑ Torque tighten the **support bolts for the left-hand suspended engine mounting on the gearbox (62 N.m)**.

❑ Fit the left-hand suspended engine mounting support on the body.

❑ Position the left-hand suspended engine mounting support on the body according to the marks made during removal.

❑ Tighten to torque:

- the **support bolts for the left-hand suspended engine mounting on the body (62 N.m)**,

K9K

- the **support bolt for the left-hand suspended engine mounting on the gearbox62 (N.m)**.

❏ Remove:

- the **safety strap(s)** from the **(Mot. 1453)**,
- the **(Mot. 1453)** fitted with the **(Mot. 1453-01)**.

II - FINAL OPERATION

❏ Refit the hydraulic clutch pipe.

❏ Clip the hydraulic clutch pipe onto the left suspended engine mounting.

❏ Remove the blanking plugs from:

- the opening of the clutch master cylinder,
- the openings of the hydraulic clutch pipe,
- the opening of the hydraulic clutch release bearing.

❏ Connect the hydraulic clutch pipe to:

- the hydraulic clutch release bearing,
- the clutch master cylinder.

❏ Remove the tool **(Ms. 583)** from the clutch master cylinder supply hose.

❏ Bleed the hydraulic clutch circuit (see **Clutch circuit: Bleeding**) (37A, Mechanical component controls).

❏ Clip the battery wiring channel onto the left-hand suspended engine mounting.

K9K, and 832

❏ Refit the upper engine tie-bar.

❏ Tighten to torque:

- the **upper engine tie-bar bolt on the engine (115 N.m)**,
- the **upper engine tie-bar bolt on the body (105 N.m)**.

❏ Refit:

- the scoop under the scuttle panel grille (see **Scoop under scuttle panel grille: Removal - Refitting**) (56A, Exterior equipment),
- the scuttle panel grille (see **Scuttle panel grille: Removal - Refitting**) (56A, Exterior equipment),
- the windscreen wiper arms (see **Windscreen wiper arm: Removal - Refitting**) (85A, Wiping - Washing).

K9K, and 832

❏ Refit the lower engine tie-bar.

❏ Tighten to torque:

- the **lower engine tie-bar bolt on the subframe (180 N.m)**,
- the **lower engine tie-bar bolt on the lower engine tie-bar support (180 N.m)**.

K9K, and 830 or 834

❏ Refit the lower engine tie-bar (see **19D**, **Engine mounting**, **Lower engine tie-bar: Removal - Refitting**, page **19D-33**) .

❏ Refit:

- the engine undertray,
- the air filter unit (see **12A**, **Fuel mixture**, **Air filter unit: Removal - Refitting**, page **12A-4**) ,
- the battery tray (see **Battery tray: Removal - Refitting**) (80A, Battery),
- the battery (see **Battery : Removal - Refitting**) (80A, Battery).

F4R

Essential special tooling	
Mot. 1453	Multiple-adjusting engine mounting support with retaining straps.
Mot. 1453-01	Additional winder nut on engine lift support Mot. 1453.

Essential equipment
safety strap(s)
indelible pencil

Tightening torques ▽	
support bolts for the left-hand suspended engine mounting on the gearbox	**62 N.m**
support bolts for the left-hand suspended engine mounting on the vehicle body	**62 N.m**
support bolt for the left-hand suspended engine mounting on the gearbox	**105 N.m**

REMOVAL

I - REMOVAL PREPARATION OPERATION

❑ Position the vehicle on a two-post lift (see **Vehicle: Towing and lifting**) (02A, Lifting equipment).

❑ Remove:

- the engine cover,
- the battery (see **Battery: Removal - Refitting**) (80A, Battery),
- the battery tray (see **Battery tray: Removal - Refitting**) (80A, Battery),
- the air filter unit (see **12A**, **Fuel mixture**, **Air filter unit: Removal - Refitting**, page **12A-4**) ,
- the windscreen wiper arms (see **Windscreen wiper arm: Removal - Refitting**) (85A, Wiping - Washing),
- the scuttle panel grille (see **Scuttle panel grille: Removal - Refitting**) (56A, Exterior equipment),
- the scoop under the scuttle panel grille (see **Scoop under scuttle panel grille: Removal - Refitting**) (56A, Exterior equipment),

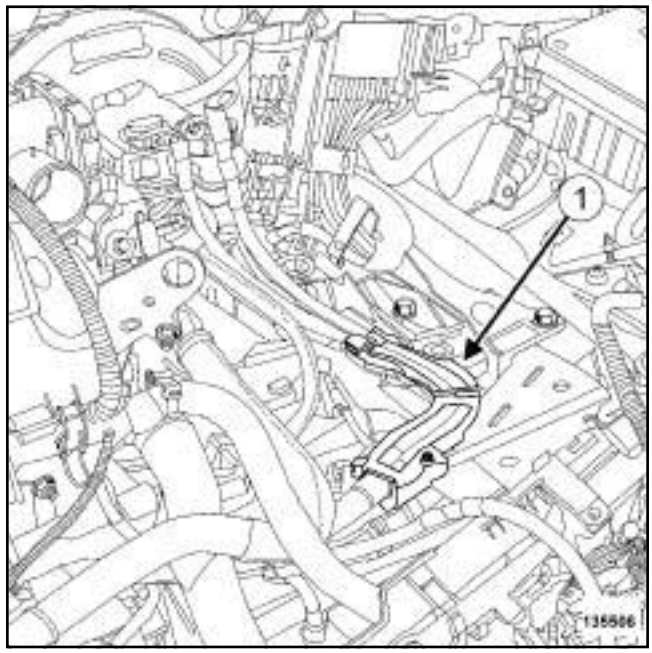

135506

❑ Unclip the battery wiring channel (**1**)

❑ Remove:

- the engine undertray bolts,
- the engine undertray,
- the lower engine tie-bar (see **19D**, **Engine mounting**, **Lower engine tie-bar: Removal - Refitting**, page **19D-33**) .

F4R

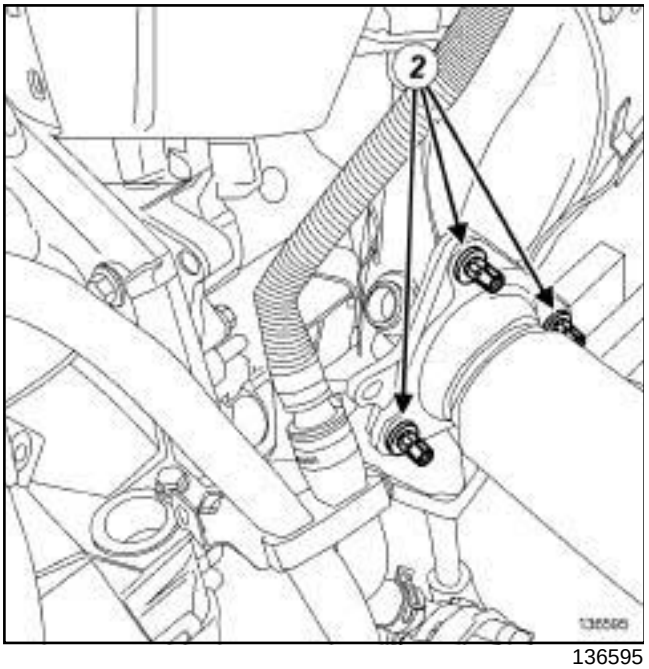

136595

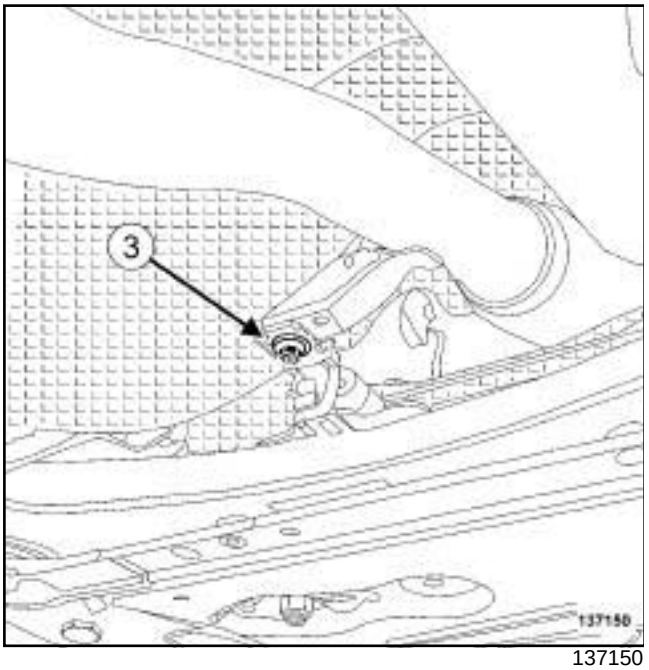

137150

❑ Remove:

- the exhaust connecting hose nuts (**2**) ,
- the bolt (**3**) for the exhaust connecting hose rubber mounting bush,
- the exhaust connecting hose seal.

❑ Remove the exhaust connecting hose.

❑ Remove:

- the front left-hand wheel (see **Wheel: Removal - Refitting**) (35A, Wheels and tyres),
- the front section of the front left-hand wheel arch liner (see **Front wheel arch liner: Removal - Refitting**) (55A, Exterior protection).

II - OPERATION FOR REMOVAL OF PART CONCERNED

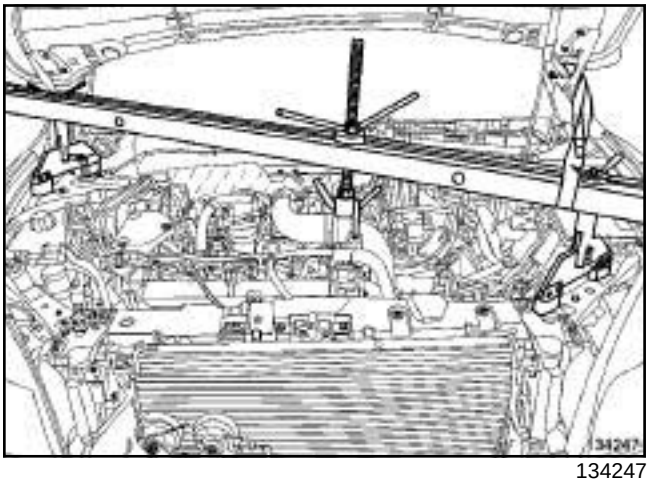

134247

❑ Fit the **(Mot. 1453)** fitted with the **(Mot. 1453-01)** with a **safety strap(s)**.

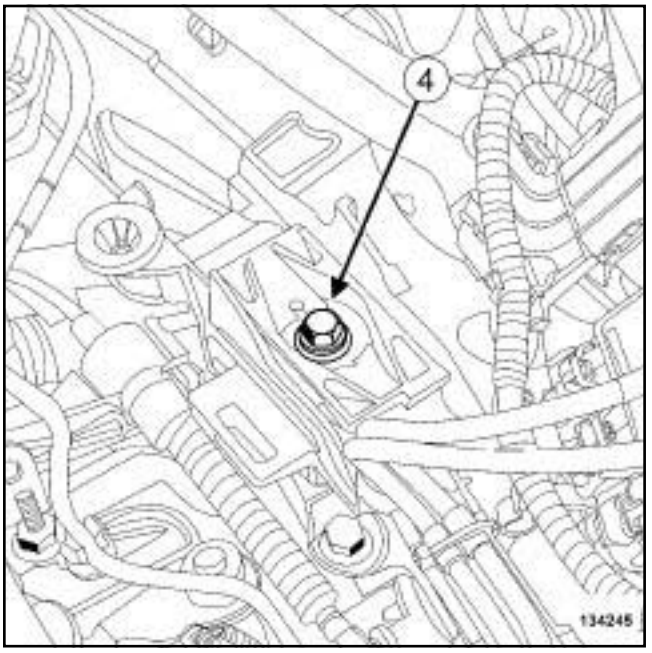

134245

❑ Remove the bolt (**4**) for the support on the manual gearbox from the left-hand suspended engine mounting.

❑ Detach the support on the gearbox from the left-hand suspended engine mounting rubber pad.

❑ Mark the position of the left-hand suspended engine mounting support on the vehicle body using a **indelible pencil**.

F4R

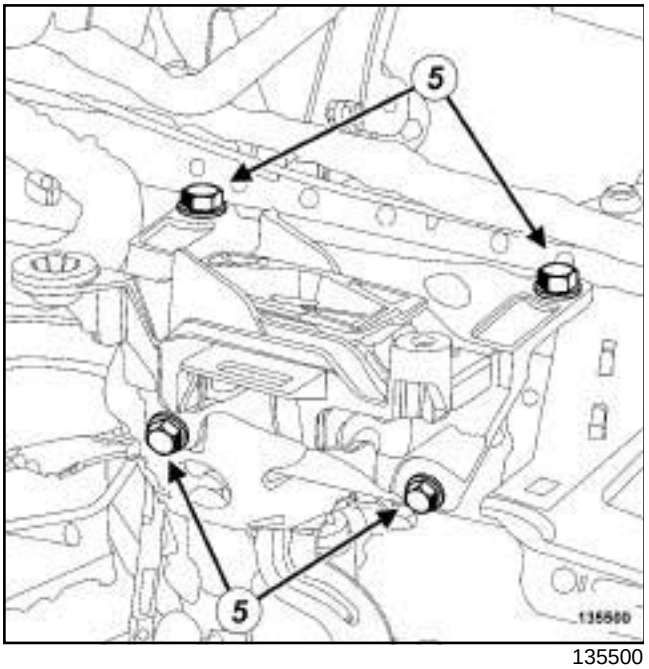

135500

❑ Remove:

- the bolts (**5**) from the left-hand suspended engine mounting support on the body,
- the left-hand suspended engine mounting support on the body.

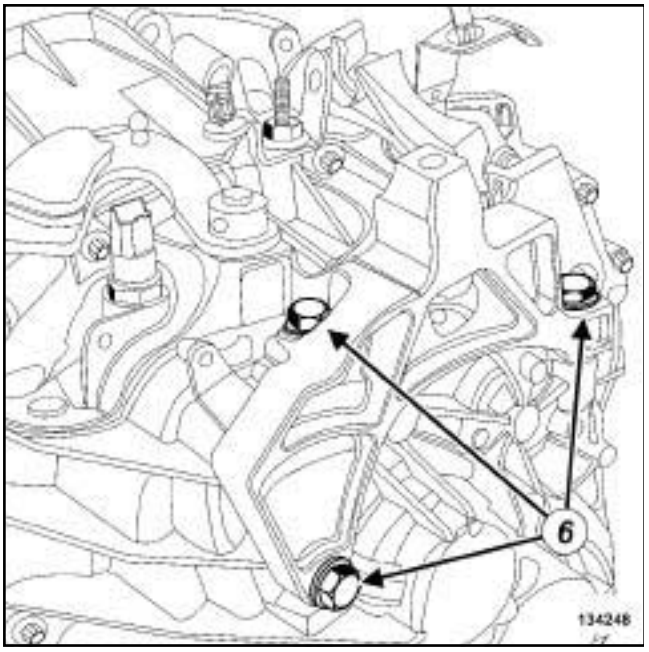

134248

❑ Remove:

- the left-hand suspended engine mounting support bolts (**6**) on the gearbox,
- the left-hand suspended engine mounting support on the gearbox.

REFITTING

I - REFITTING PREPARATION OPERATION

❑ **parts always to be replaced: seal between catalytic converter and exhaust downpipe hose (10, 08,02,21)**.

II - REFITTING OPERATION FOR PART CONCERNED

❑ Refit the left-hand suspended engine mounting support on the gearbox.

❑ Torque tighten the **support bolts for the left-hand suspended engine mounting on the gearbox (62 N.m)**.

❑ Fit the left-hand suspended engine mounting support on the body.

❑ Position the support on the left-hand suspended engine mounting according to the marks made during removal.

❑ Tighten to torque:

- the **support bolts for the left-hand suspended engine mounting on the vehicle body (62 N.m)**,
- the **support bolt for the left-hand suspended engine mounting on the gearbox (105 N.m)**.

❑ Remove:

- the **safety strap(s)** from the **(Mot. 1453)**,
- the tool **(Mot. 1453)** equipped with the tool **(Mot. 1453-01)** using the **safety strap(s)**.

III - FINAL OPERATION

❑ Refit:

- the front section of the front left-hand wheel arch liner (see **Front wheel arch liner: Removal - Refitting**) (55A, Exterior protection),
- the front left-hand wheel (see **Wheel: Removal - Refitting**) (35A, Wheels and tyres),

❑ Fit the exhaust connecting hose.

❑ Refit:

- a seal to the new exhaust connecting hose,
- the bolt for the exhaust connecting hose rubber mounting bush,
- the exhaust connecting hose nuts.

F4R

- Refit:
  - the lower engine tie-bar (see **19D**, **Engine mounting**, **Lower engine tie-bar: Removal - Refitting**, page **19D-33**) ,
  - the engine undertray.
- Clip on the battery wiring channel.
- Refit:
  - the scoop under the scuttle panel grille (see **Scoop under scuttle panel grille: Removal - Refitting**) (56A, Exterior equipment),
  - the scuttle panel grille (see **Scuttle panel grille: Removal - Refitting**) (56A, Exterior equipment),
  - the windscreen wiper arms (see **Windscreen wiper arm: Removal - Refitting**) (85A, Wiping - Washing),
  - the air filter unit (see **12A**, **Fuel mixture**, **Air filter unit: Removal - Refitting**, page **12A-4**) ,
  - the battery tray (see **Battery tray: Removal - Refitting**) (80A, Battery),
  - the battery (see **Battery : Removal - Refitting**) (80A, Battery),
  - the engine cover.

K4M

Essential special tooling	
Mot. 1453	Multiple-adjusting engine mounting support with retaining straps.
Mot. 1453-01	Additional winder nut on engine lift support Mot. 1453.

Essential equipment
safety strap(s)
indelible pencil

Tightening torques ▽	
bolts for the suspended engine mounting rubber pad	**62 N.m**
bolts for the right-hand suspended engine mounting cover	**62 N.m**

REMOVAL

I - REMOVAL PREPARATION OPERATION

❑ Remove:

- the engine cover,
- the windscreen wiper arms (see **Windscreen wiper arm: Removal - Refitting**) (85A, Wiping - Washing),
- the scuttle panel grille (see **Scuttle panel grille: Removal - Refitting**) (56A, Exterior equipment),
- the scoop under the scuttle panel grille (see **Scoop under scuttle panel grille: Removal - Refitting**) (56A, Exterior equipment).

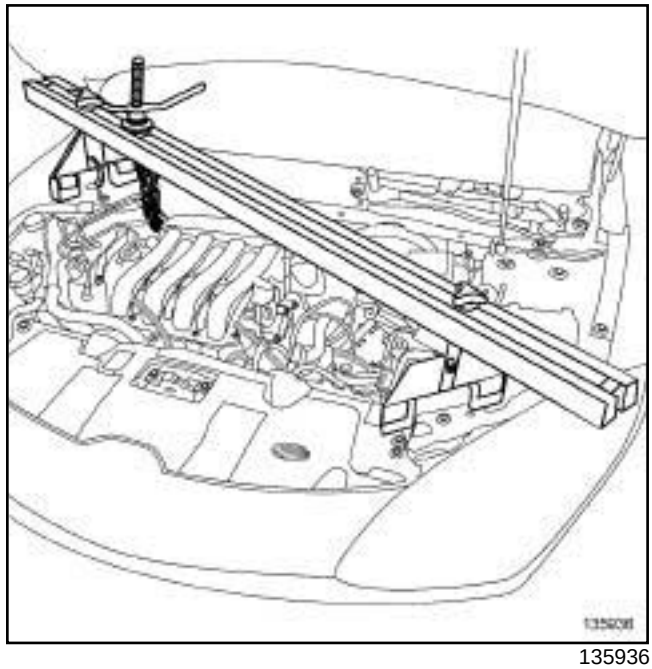

135936

❑ Fit the tool **(Mot. 1453)** equipped with the tool **(Mot. 1453-01)** using the **safety strap(s)**.

K4M

II - OPERATION FOR REMOVAL OF PART CONCERNED

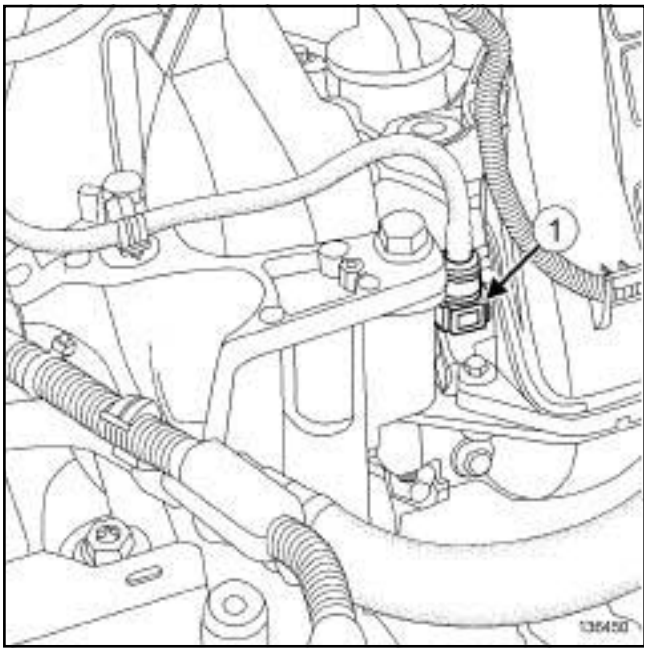

136450

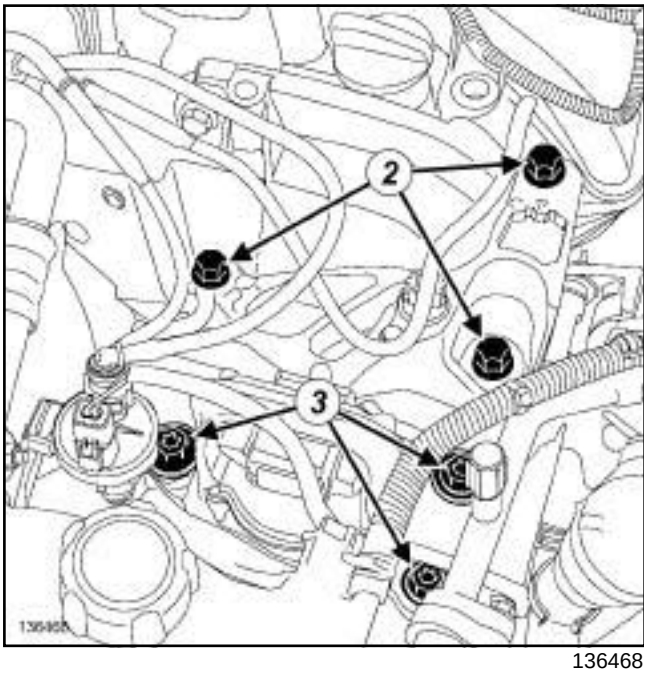

136468

❑ Disconnect the fuel supply pipe from the injector rail (**1**) .

❑ Insert the blanking plugs.

❑ Unclip the fuel supply pipe from the right-hand suspended engine mounting.

❑ Remove the fuel supply pipe from the right-hand suspended engine mounting.

❑ Mark the position of the right-hand suspended engine mounting on the body using a **indelible pencil**.

❑ Remove:

- the bolts (**2**) from the right-hand suspended engine mounting cover,
- the bolt (**3**) from the rubber pad on the right-hand suspended engine mounting,
- the right-hand suspended engine mounting.

REFITTING

I - REFITTING OPERATION FOR PART CONCERNED

❑ Fit the right-hand suspended engine mounting to the engine.

❑ Tighten to torque:

- the **bolts for the suspended engine mounting rubber pad (62 N.m)**.
- the **bolts for the right-hand suspended engine mounting cover (62 N.m)**.

❑ Fit the fuel supply pipe to the right-hand suspended engine mounting.

❑ Clip the fuel supply pipe on the right-hand suspended engine mounting.

❑ Remove the blanking plugs.

❑ Connect the fuel supply pipe to the injector rail.

II - FINAL OPERATION

❑ Remove the **(Mot. 1453)** fitted with the **(Mot. 1453-01)**.

❑ Refit:

- the scoop under the scuttle panel grille (see **Scoop under scuttle panel grille: Removal - Refitting**) (56A, Exterior equipment),
- the scuttle panel grille (see **Scuttle panel grille: Removal - Refitting**) (56A, Exterior equipment),
- the windscreen wiper arms (see **Windscreen wiper arm: Removal - Refitting**) (85A, Wiping - Washing),
- the engine cover.

K9K

Essential special tooling	
Mot. 1453	Multiple-adjusting engine mounting support with retaining straps.
Mot. 1453-01	Additional winder nut on engine lift support Mot. 1453.

Essential equipment
safety strap(s)

Tightening torques ▽	
bolts for the right-hand suspended engine mounting « rubber pad - cover » assembly on the cylinder head	**62 N.m**
bolts for the right-hand suspended engine mounting « rubber pad - cover » assembly on the body	**62 N.m**
bolt for the upper engine tie-bar on the right-hand suspended engine mounting support	**115 N.m**
upper engine tie-bar bolt on the body	**105 N.m**
lower engine tie-bar bolt on the subframe	**180 N.m**
lower engine tie-bar bolt on the lower engine tie-bar support	**180 N.m**

IMPORTANT
Wear leaktight gloves (Nitrile type) for this operation.

IMPORTANT
To avoid all risk of damage to the systems, apply the safety and cleanliness instructions and operation recommendations before carrying out any repair (see **13B**, **Diesel injection**, **Diesel injection: Precautions for repair**, page **13B-1**) .

REMOVAL

I - REMOVAL PREPARATION OPERATION

❑ Position the vehicle on a two-post lift (see **Vehicle: Towing and lifting**) (02A, Lifting equipment).

❑ Remove:

- the engine undertray bolts,

- the engine undertray.

K9K, and 832

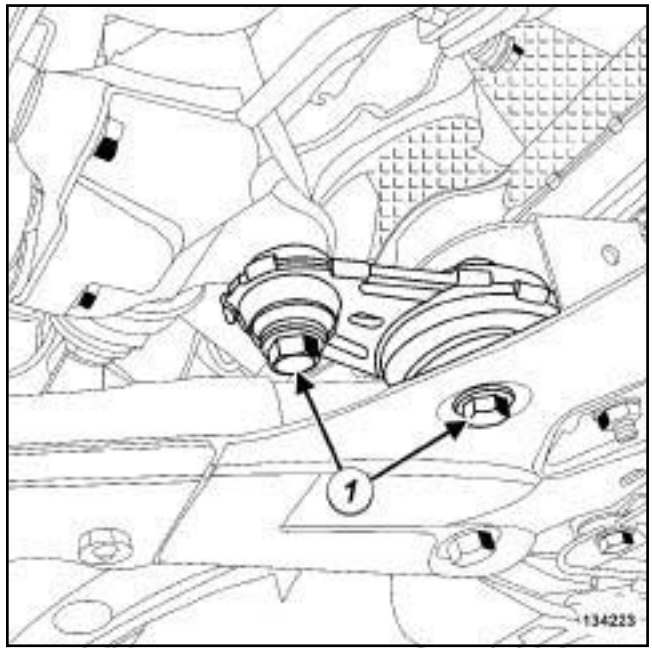

134223

❑ Remove:

- the bolts (**1**) from the lower engine tie-bar,

- the lower engine tie-bar.

K9K, and 830

❑ Remove the lower engine tie-bar (see **19D**, **Engine mounting**, **Lower engine tie-bar: Removal - Refitting**, page **19D-33**) .

K9K

K9K, and 832

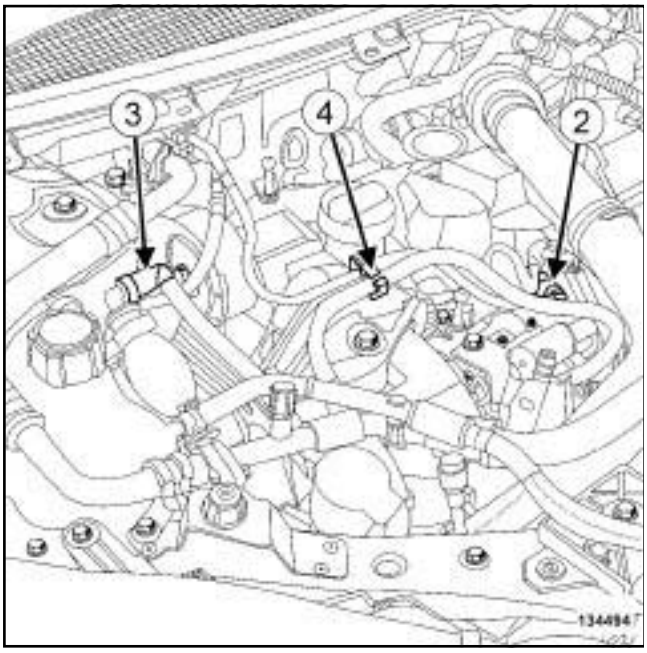

134494

- ❑ Disconnect the diesel fuel return pipe from the fuel return rail at (**2**) .
- ❑ Fit suitable blanking plugs on:
  - the opening of the fuel return rail,
  - the diesel return pipe opening.

K9K, and 830

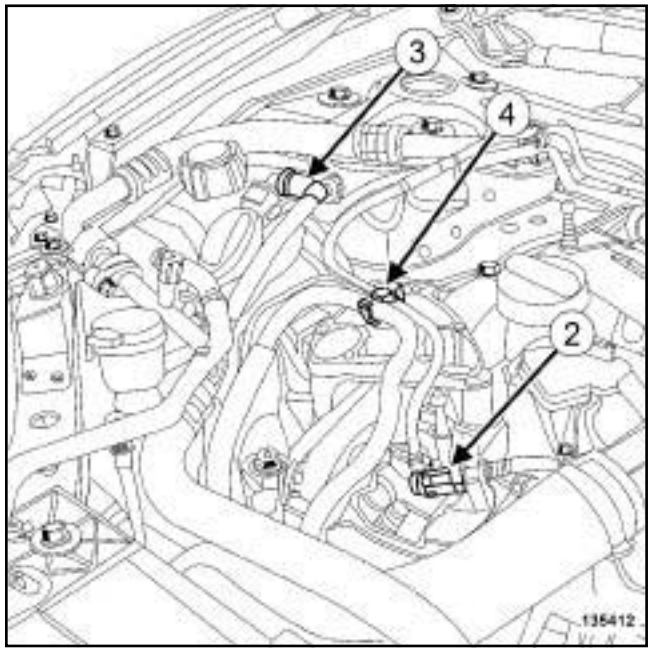

135412

- ❑ Disconnect the diesel fuel return pipe from the high pressure pump union at (**2**) .
- ❑ Fit blanking plugs on:
  - the opening of the high pressure pump union,
  - the diesel return pipe opening.

- ❑ Disconnect the fuel supply pipe ***(3)*** from the manual priming pump.
- ❑ Fit suitable blanking plugs on:
  - the fuel supply pipe opening,
  - the opening of the manual priming pump.
- ❑ Unclip the fuel pipes from the right-hand suspended engine mounting « rubber pad - cover » assembly at ***(4)*** .
- ❑ Move the fuel pipesto one side.
- ❑ Remove:
  - the windscreen wiper arms (see **Windscreen wiper arm: Removal - Refitting**) (85A, Wiping - Washing),
  - the scuttle panel grille (see **Scuttle panel grille: Removal - Refitting**) (56A, Exterior equipment).
  - the scoop under the scuttle panel grille (see **Scoop under scuttle panel grille: Removal - Refitting**) (56A, Exterior equipment).

K9K

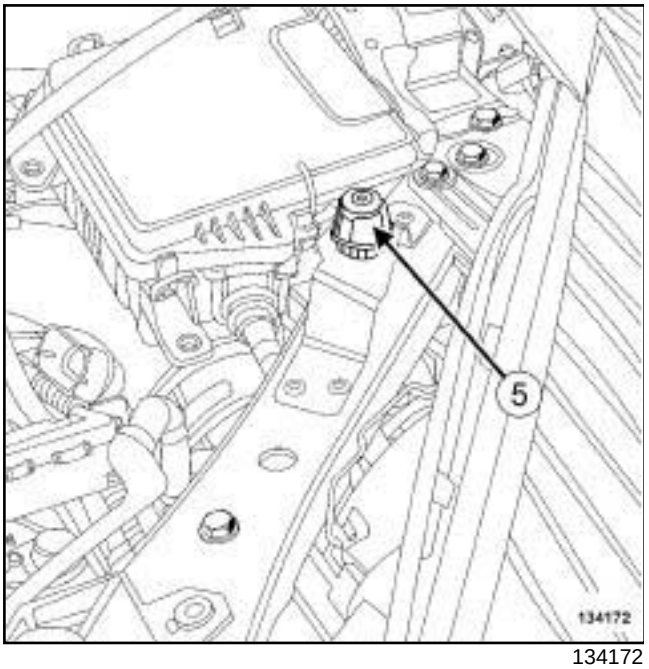

134172

❑ Remove the bonnet stop (**5**) .

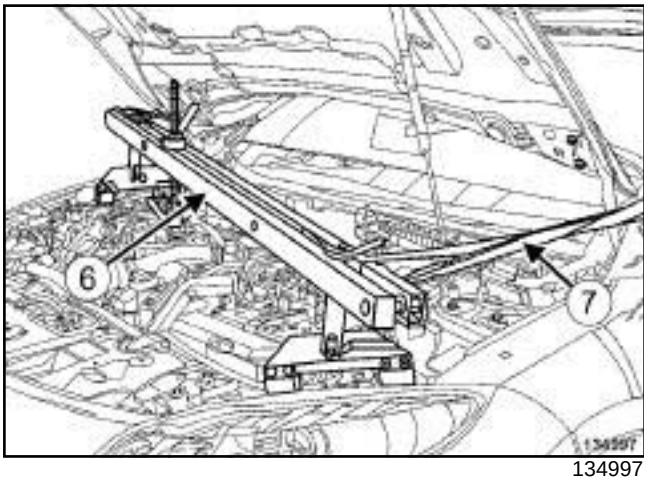

134997

❑ Fit the **(Mot. 1453)** fitted with the **(Mot. 1453-01)** (**6**) with a **safety strap(s)** (**7**) .

K9K

II - OPERATION FOR REMOVAL OF PART CONCERNED

K9K, and 832

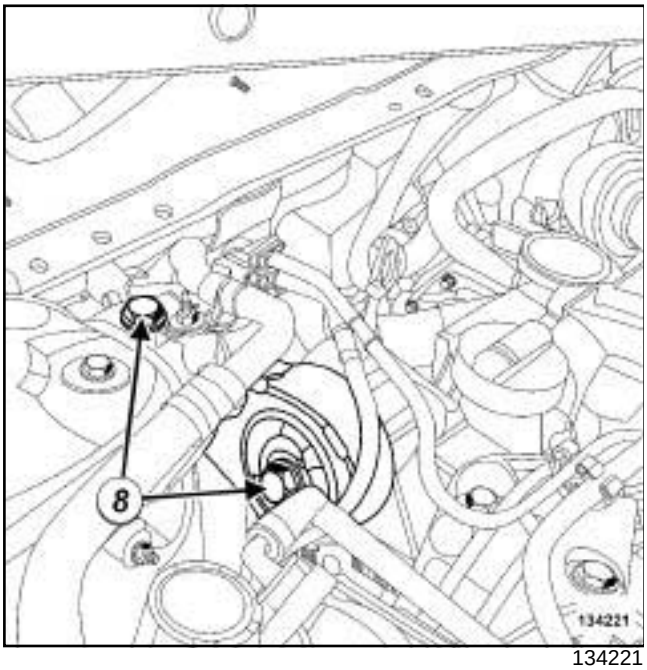

134221

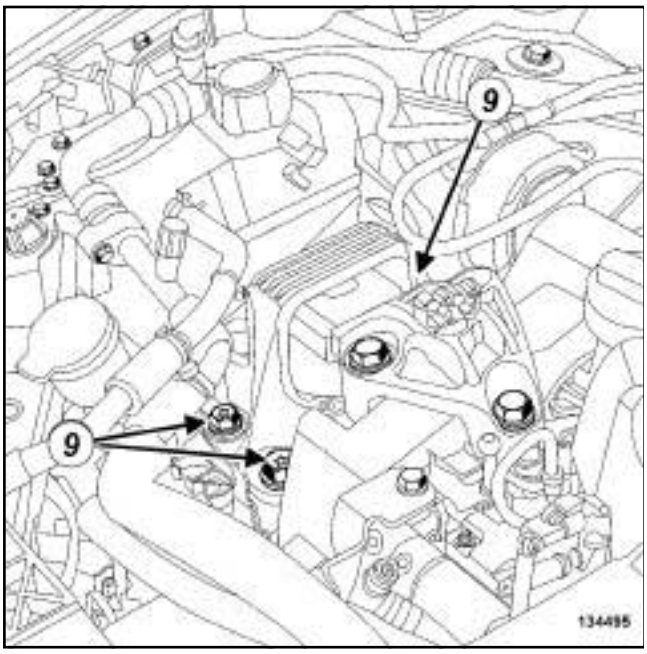

134495

❑ Remove:

- the upper engine tie-bar bolts (**8**) ,
- the upper engine tie-bar.

❑ Remove the bolts (**9**) for the right-hand suspended engine mounting « rubber pad - cover » assembly from the body.

K9K, and 830

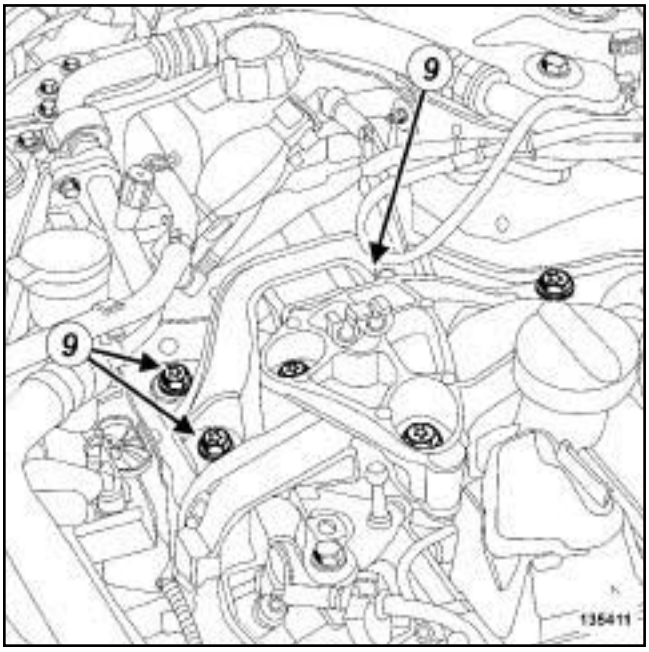

135411

❑ Remove the bolts (**9**) for the right-hand suspended engine mounting « rubber pad - cover » assembly from the body.

❑ Raise the engine slightly using the tool **(Mot. 1453)** equipped with the tool **(Mot. 1453-01)** until the right-hand suspended engine mounting « rubber pad - cover » assembly detaches from the body.

K9K

K9K, and 832

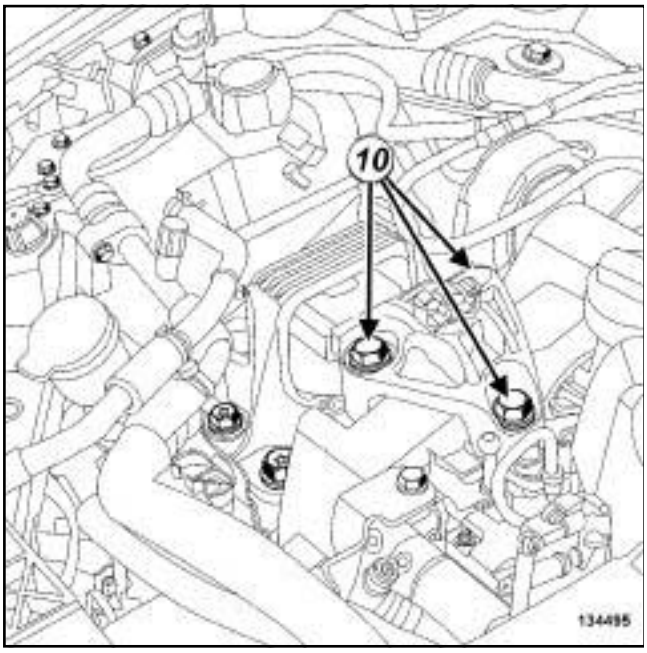

134495

❑ Remove:

- the bolts (**10**) for the right-hand suspended engine mounting « rubber pad - cover » assembly from the cylinder head,
- the right-hand suspended engine mounting « cover - rubber pad » assembly.

K9K, and 830

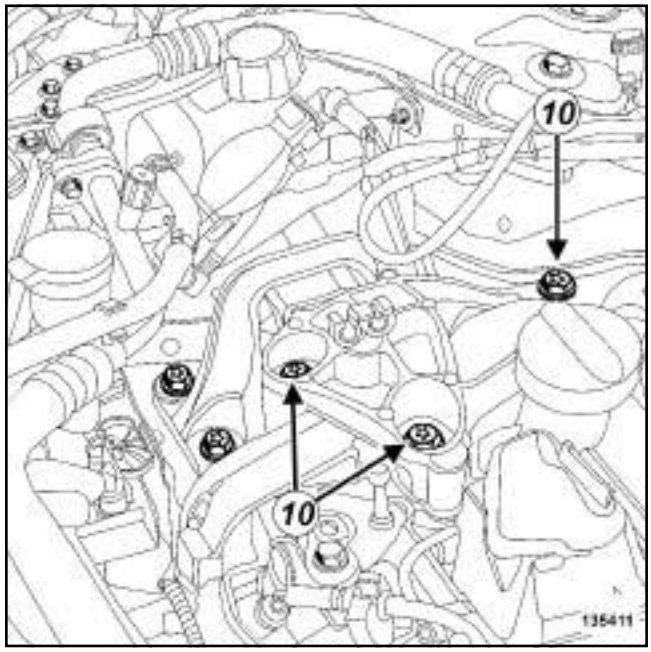

135411

❑ Remove:

- the bolts (**10**) for the right-hand suspended engine mounting « rubber pad - cover » assembly from the cylinder head,
- the right-hand suspended engine mounting « cover - rubber pad » assembly.

REFITTING

I - REFITTING OPERATION FOR PART CONCERNED

❑ Refit the bolts for the right-hand suspended engine mounting « rubber pad - cover » assembly to the cylinder head.

❑ Lower the engine using the tool **(Mot. 1453)** fitted with the tool **(Mot. 1453-01)** until the right-hand suspended engine mounting « rubber pad - cover » assembly touches the body.

❑ Refit the bolts for the right-hand suspended engine mounting « rubber pad - cover » assembly to the body.

❑ Tighten to torque:

- the **bolts for the right-hand suspended engine mounting « rubber pad - cover » assembly on the cylinder head (62 N.m)**,

K9K

- the **bolts for the right-hand suspended engine mounting « rubber pad - cover » assembly on the body (62 N.m)**.

K9K, and 832

❑ Refit the upper engine tie-bar.

❑ Tighten to torque:

- the **bolt for the upper engine tie-bar on the right-hand suspended engine mounting support (115 N.m)**,
- the **upper engine tie-bar bolt on the body (105 N.m)**.

II - FINAL OPERATION

❑ Remove the **safety strap(s)** from the tool **(Mot. 1453)**.

❑ Remove the **(Mot. 1453)** fitted with the **(Mot. 1453-01)**.

❑ Refit:

- the bonnet stop,
- the scoop under the scuttle panel grille (see **Scoop under scuttle panel grille: Removal - Refitting**) (56A, Exterior equipment),
- the scuttle panel grille (see **Scuttle panel grille: Removal - Refitting**) (56A, Exterior equipment),
- the windscreen wiper arms (see **Windscreen wiper arm: Removal - Refitting**) (85A, Wiping - Washing).

❑ Position the fuel pipes.

❑ Clip the fuel pipes onto the « rubber pad - cover » assembly of the right-hand suspended engine mounting.

❑ Remove the blanking plugs from:

- the opening of the manual priming pump,
- the opening of the fuel supply pipe.

❑ Connect the fuel supply pipe union to the union of the manual priming pump.

K9K, and 832

❑ Remove the blanking plugs from:

- the diesel return pipe opening,
- the opening of the fuel return rail.

❑ Connect the diesel fuel return pipe to the fuel return rail.

K9K, and 830

❑ Remove the blanking plugs from:

- the diesel return pipe opening,
- the opening of the high pressure pump union.

❑ Connect the diesel fuel return pipe to the high pressure pump union.

K9K, and 832

❑ Refit the lower engine tie-bar.

❑ Tighten to torque:

- the **lower engine tie-bar bolt on the subframe (180 N.m)**,
- the **lower engine tie-bar bolt on the lower engine tie-bar support (180 N.m)**.

K9K, and 830

❑ Refit the lower engine tie-bar (see **19D**, **Engine mounting**, **Lower engine tie-bar: Removal - Refitting**, page **19D-33**) .

❑ Refit the engine undertray.

F4R

Essential special tooling	
Mot. 1453	Multiple-adjusting engine mounting support with retaining straps.
Mot. 1453-01	Additional winder nut on engine lift support Mot. 1453.

Essential equipment
safety strap(s)

Tightening torques ▽	
upper engine tie-bar bolts	**115 N.m**
bolts for the right-hand suspended engine mounting rubber pad	**62 N.m**
bolts for the right-hand suspended engine mounting cover	**62 N.m**

WARNING
To prevent impurities from entering the circuit, place protective plugs on all fuel circuit components exposed to the open air.

REMOVAL

I - REMOVAL PREPARATION OPERATION

❑ Position the vehicle on a two-post lift (see **Vehicle: Towing and lifting**) (02A, Lifting equipment).

❑ Remove:

- the engine cover,
- the engine undertray bolts,
- the engine undertray,
- the lower engine tie-bar (see **19D**, **Engine mounting**, **Lower engine tie-bar: Removal - Refitting**, page **19D-33**) .

F4R

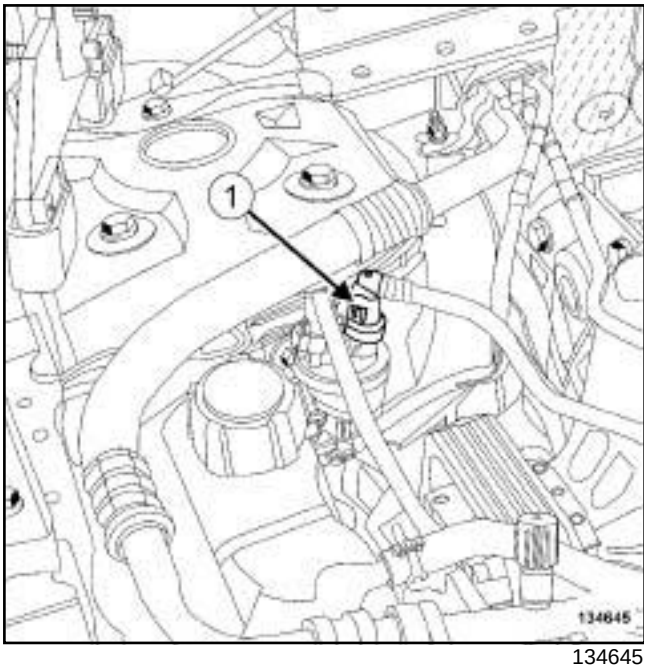

134645

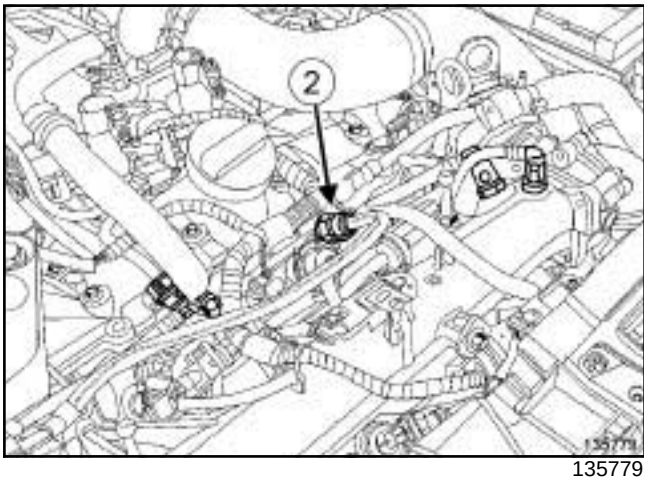

135779

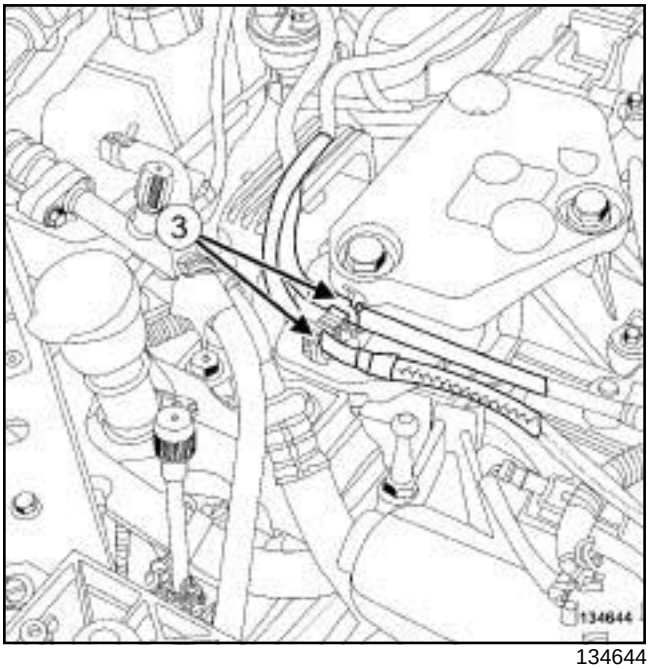

134644

❑ Disconnect:

- the petrol vapour rebreathing solenoid valve pipe (**1**) ,
- the fuel supply pipe (**2**) on the injector rail,

❑ Insert the blanking plugs.

❑ Unclip the pipes from the cover of the right-hand suspended engine mounting at (**3**) .

❑ Remove:

- the windscreen wiper arms (see **Windscreen wiper arm: Removal - Refitting**) (85A, Wiping - Washing),
- the scuttle panel grille (see **Scuttle panel grille: Removal - Refitting**) (56A, Exterior equipment),
- the scoop under the scuttle panel grille (see **Scoop under scuttle panel grille: Removal - Refitting**) (56A, Exterior equipment).

F4R

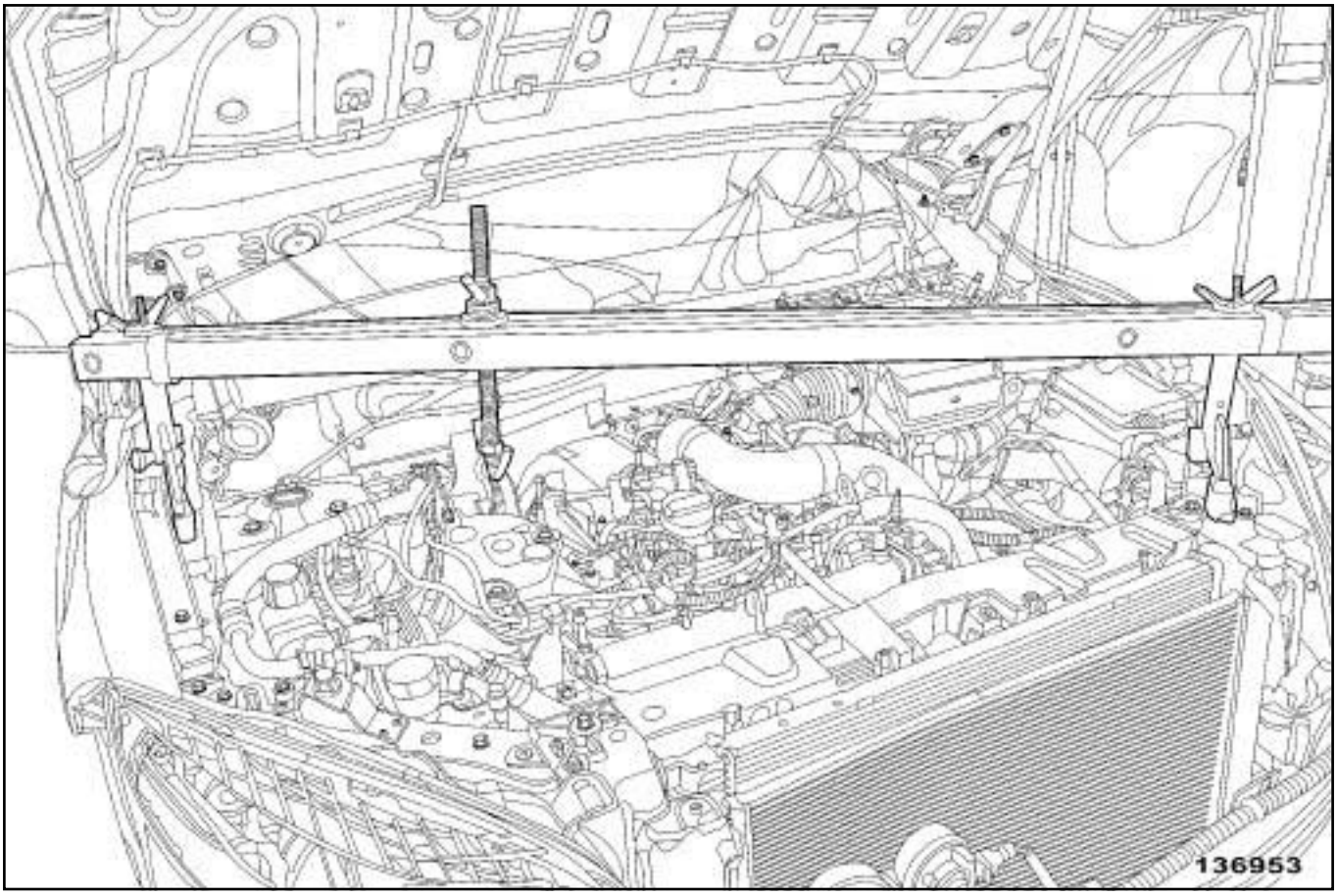

136953

❑ Fit the tool **(Mot. 1453)** equipped with the tool **(Mot. 1453-01)** using a **safety strap(s)**.

II - OPERATION FOR REMOVAL OF PART CONCERNED

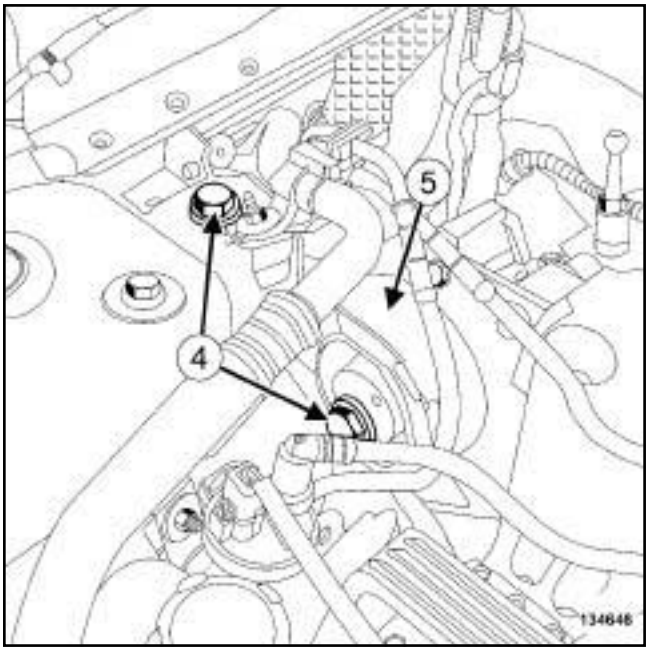

134646

❑ Remove:

- the upper engine tie-bar bolts (**4**) ,

F4R

- the upper engine tie-bar (**5**) .

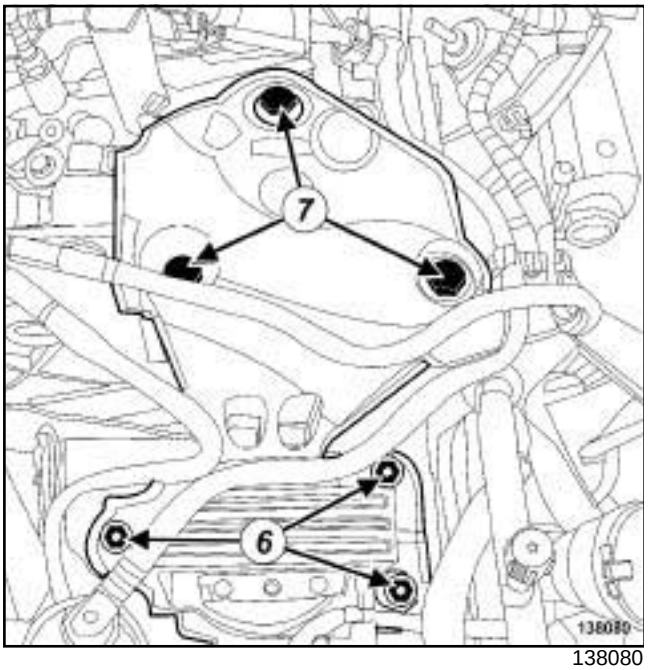

138080

❑ Remove:

- the bolts (**6**) from the right-hand suspended engine mounting rubber pad on the vehicle body,
- the bolts (**7**) from the right-hand suspended engine mounting cover,
- the right-hand suspended engine mounting « cover - rubber pad » assembly.

REFITTING

I - REFITTING OPERATION FOR PART CONCERNED

❑ Refit the right-hand suspended engine mounting « cover - rubber pad » assembly.

❑ Fit without tightening:

- the bolts for the right-hand suspended engine mounting cover,
- the bolts for the right-hand suspended engine mounting rubber pad.

❑ Refit the upper engine tie-bar.

❑ Tighten to torque:

- the **upper engine tie-bar bolts (115 N.m)**,
- the **bolts for the right-hand suspended engine mounting rubber pad (62 N.m)**,
- the **bolts for the right-hand suspended engine mounting cover (62 N.m)**.

II - FINAL OPERATION

❑ Remove the tool **(Mot. 1453)** equipped with the tool **(Mot. 1453-01)** using the **safety strap(s)**.

❑ Refit:

- the scoop under the scuttle panel grille (see **Scoop under scuttle panel grille: Removal - Refitting**) (56A, Exterior equipment),
- the scuttle panel grille (see **Scuttle panel grille: Removal - Refitting**) (56A, Exterior equipment),
- the windscreen wiper arms (see **Windscreen wiper arm: Removal - Refitting**) (85A, Wiping - Washing),

❑ Clip the pipes onto the cover of the front right-hand suspended engine mounting.

❑ Remove the blanking plugs.

❑ Connect:

- the fuel supply pipe to the injector rail,
- the pipe to the fuel vapour rebreathing solenoid valve.

❑ Refit:

- the lower engine tie-bar (see **19D**, **Engine mounting**, **Lower engine tie-bar: Removal - Refitting**, page **19D-33**) ,
- the engine undertray,
- the engine cover.

F9Q

Essential special tooling	
Mot. 1453	Multiple-adjusting engine mounting support with retaining straps.
Mot. 1453-01	Additional winder nut on engine lift support Mot. 1453.

Essential equipment
indelible pencil

Tightening torques ▽	
right-hand suspended engine mounting bolts	**62 N.m**
engine tie-bar bolt on the body	**110 N.m**
engine tie-bar bolt on the engine	**115 N.m**

REMOVAL

I - REMOVAL PREPARATION OPERATION

❑ Position the vehicle on a two-post lift (see **Vehicle: Towing and lifting**) (02A, Lifting equipment).

❑ Remove:

- the engine cover,
- the engine undertray bolts,
- the engine undertray.
- the lower engine tie-bar (see **19D**, **Engine mounting**, **Lower engine tie-bar: Removal - Refitting**, page **19D-33**) ,
- the windscreen wiper arms (see **Windscreen wiper arm: Removal - Refitting**) (85A, Wiping - Washing),
- the scuttle panel grille (see **Scuttle panel grille: Removal - Refitting**) (56A, Exterior equipment),
- the scoop under the scuttle panel grille (see **Scoop under scuttle panel grille: Removal - Refitting**) (56A, Exterior equipment).

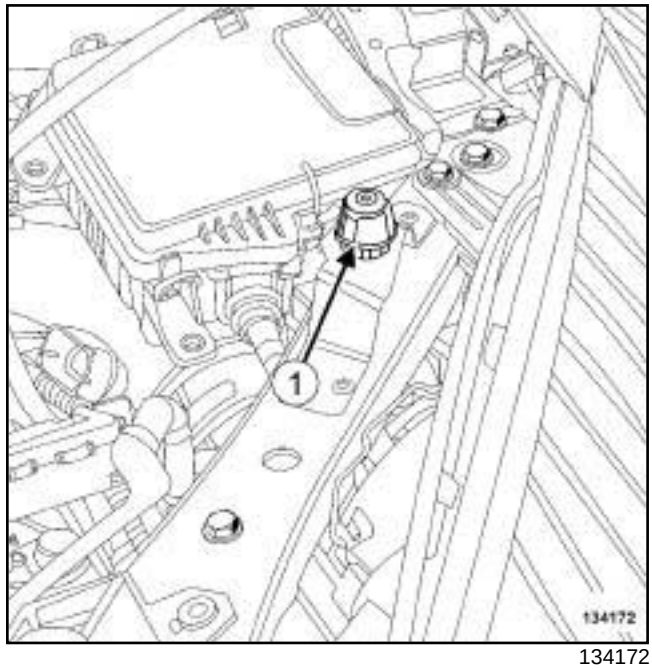

134172

❑ Remove the front left-hand bonnet stop (**1**) .

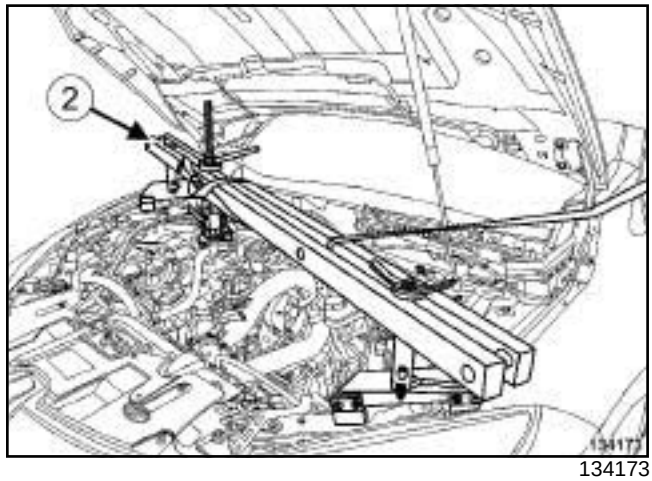

134173

❑ Position the **(Mot. 1453)** and **(Mot. 1453-01)**.

F9Q

II - OPERATION FOR REMOVAL OF PART CONCERNED

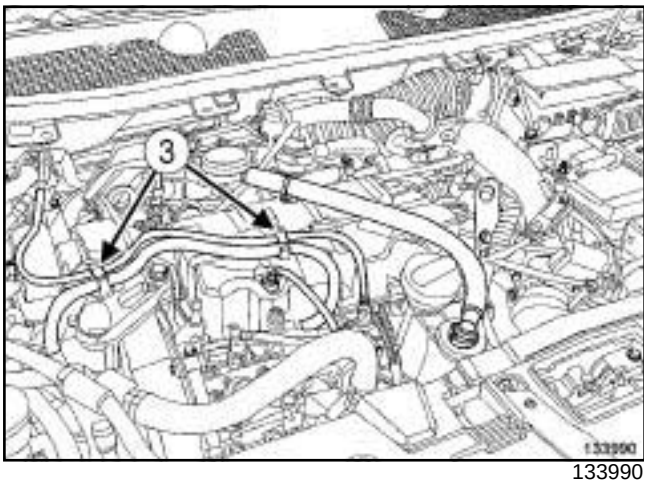

133990

❑ Unclip the fuel pipes (**3**) .

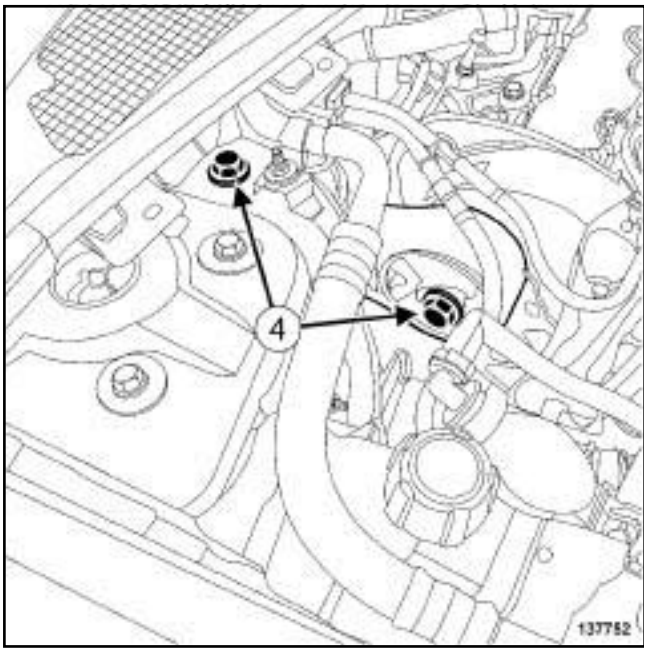

137752

❑ Remove:

- the upper engine tie-bar bolts (**4**) ,
- the upper engine tie-bar.

❑ Mark the position of the right-hand suspended engine mounting on the body using a **indelible pencil**.

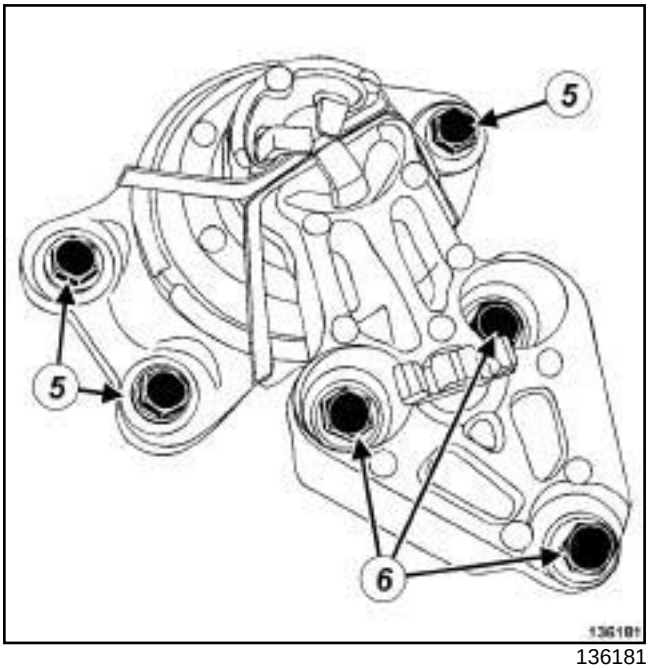

136181

❑ Remove:

- the right-hand suspended engine mounting bolts (**5**) on the body,
- the bolts (**6**) from the right-hand suspended engine mounting on the engine,
- the right-hand suspended engine mounting.

REFITTING

I - REFITTING OPERATION FOR PART CONCERNED

❑ Refit the right-hand suspended engine mounting in relation to the mark made at the time of removal.

❑ Torque tighten the **right-hand suspended engine mounting bolts (62 N.m)**.

❑ Refit the upper engine tie-bar.

❑ Tighten to torque:

- the **engine tie-bar bolt on the body (110 N.m)**,
- the **engine tie-bar bolt on the engine (115 N.m)**.

❑ Clip on the fuel pipes.

II - FINAL OPERATION

❑ Remove the **(Mot. 1453)** and **(Mot. 1453-01)**.

❑ Refit:

- the front left-hand bonnet stop,

F9Q

- the scoop under the scuttle panel grille (see **Scoop under scuttle panel grille: Removal - Refitting**) (56A, Exterior equipment),
- the scuttle panel grille (see **Scuttle panel grille: Removal - Refitting**) (56A, Exterior equipment),
- the windscreen wiper arms (see **Windscreen wiper arm: Removal - Refitting**) (85A, Wiping - Washing),
- the lower engine tie-bar (see **19D**, **Engine mounting**, **Lower engine tie-bar: Removal - Refitting**, page **19D-33**) ,
- the engine undertray.
- the engine cover.

F4R

Tightening torques ▽	
lower engine tie-bar bolts	**180 N.m**

REMOVAL

I - REMOVAL PREPARATION OPERATION

❑ Position the vehicle on a two-post lift (see **Vehicle: Towing and lifting**) (02A, Lifting equipment).

❑ Remove the engine undertray.

II - OPERATION FOR REMOVAL OF PART CONCERNED

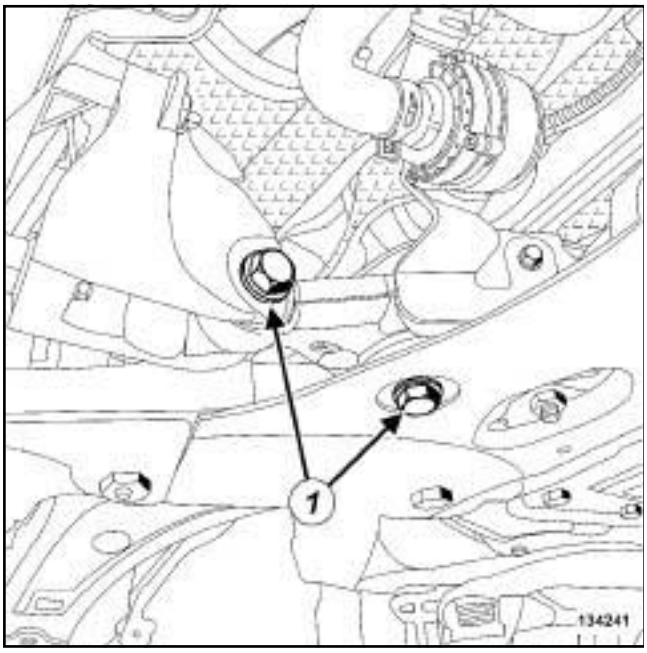

134241

❑ Remove:

- the bolts (**1**) from the lower engine tie-bar.
- the lower engine tie-bar.

REFITTING

I - REFITTING OPERATION FOR PART CONCERNED

❑ Refit:

- the lower engine tie-bar,
- the lower engine tie-bar bolts.

❑ Torque tighten the **lower engine tie-bar bolts (180 N.m)**.

II - FINAL OPERATION

❑ Refit the engine undertray.

K9K

Tightening torques ▽	
lower engine tie-bar support bolts	**62 N.m**
lower engine tie-bar bolt on the subframe	**180 N.m**
lower engine tie-bar bolt on the lower engine tie-bar support	**180 N.m**
lower engine tie-bar tie rod bolt on the gearbox	**105 N.m**
lower engine tie-bar bolts on the subframe	**105 N.m**

REMOVAL

I - REMOVAL PREPARATION OPERATION

❑ Position the vehicle on a two-post lift (see **Vehicle: Towing and lifting**) (02A, Lifting equipment).

❑ Remove:

- the engine undertray bolts,
- the engine undertray.

II - OPERATION FOR REMOVAL OF PART CONCERNED

K9K, and 832

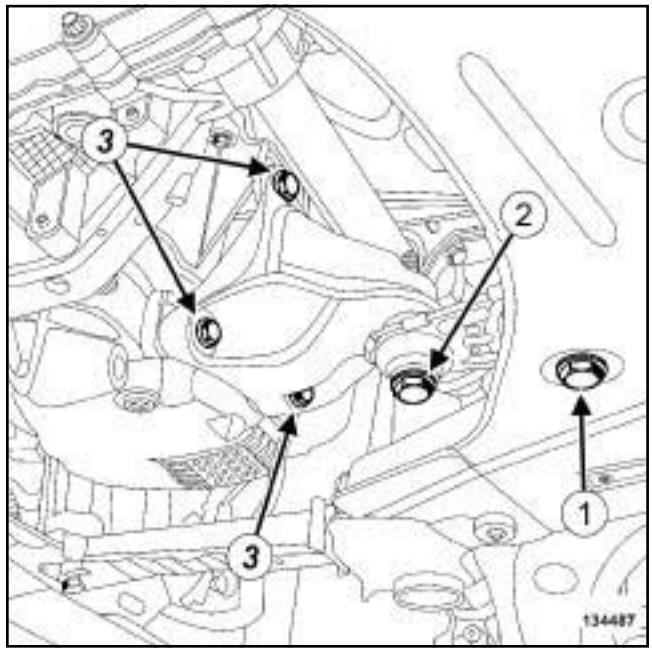

134487

❑ Remove:

- the bolt (**1**) for the lower engine tie-bar from the subframe,
- the bolt (**2**) for the lower engine tie-bar from the lower engine tie-bar support,
- the lower engine tie-bar,
- the lower engine tie-bar support bolts (**3**) ,
- the lower engine tie-bar support.

K9K

K9K, and 830 or 834

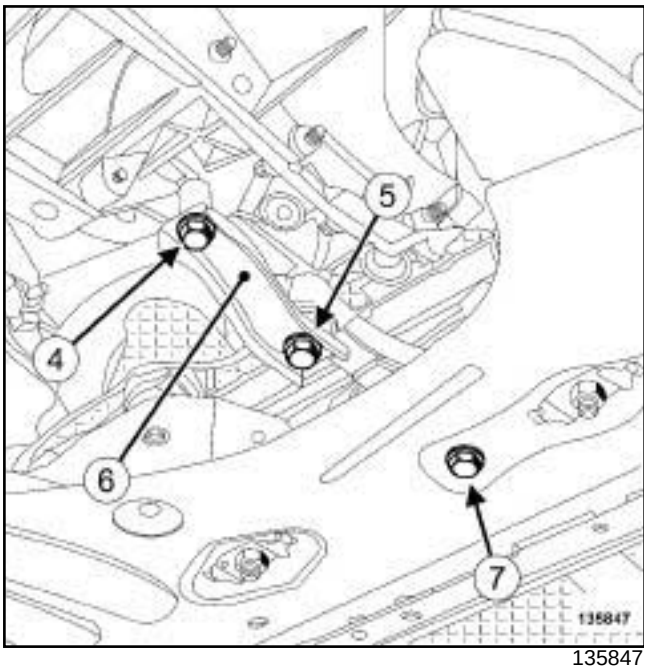

135847

❑ Undo the bolt (**4**) for the lower engine tie-bar tie rod on the gearbox.

❑ Remove:

- the lower engine tie-bar tie rod bolt (**5**) ,
- the lower engine tie-bar tie rod (**6**) ,
- the bolt (**7**) for the lower engine tie-bar from the subframe,
- the lower engine tie-bar.

REFITTING

I - REFITTING OPERATION FOR PART CONCERNED

K9K, and 832

❑ Refit the lower engine tie-bar support.

❑ Torque tighten the **lower engine tie-bar support bolts (62 N.m)**.

❑ Refit the lower engine tie-bar on the subframe.

❑ Tighten to torque:

- the **lower engine tie-bar bolt on the subframe (180 N.m)**,
- the **lower engine tie-bar bolt on the lower engine tie-bar support (180 N.m)**.

K9K, and 830 or 834

❑ Refit without tightening:

- the lower engine tie-bar,
- the lower engine tie-bar tie rod.

❑ Tighten to torque:

- the **lower engine tie-bar tie rod bolt on the gearbox (105 N.m)**,
- the **lower engine tie-bar bolts on the subframe (105 N.m)**.

II - FINAL OPERATION

❑ Refit the engine undertray.

F9Q

Tightening torques ▽	
engine tie-bar bolt on its support	**180 N.m**
engine tie-bar bolt on the subframe	**180 N.m**

REMOVAL

I - REMOVAL PREPARATION OPERATION

❑ Position the vehicle on a two-post lift (see **Vehicle: Towing and lifting**) (02A, Lifting equipment).

❑ Remove:

- the engine undertray bolts,
- the engine undertray.

II - OPERATION FOR REMOVAL OF PART CONCERNED

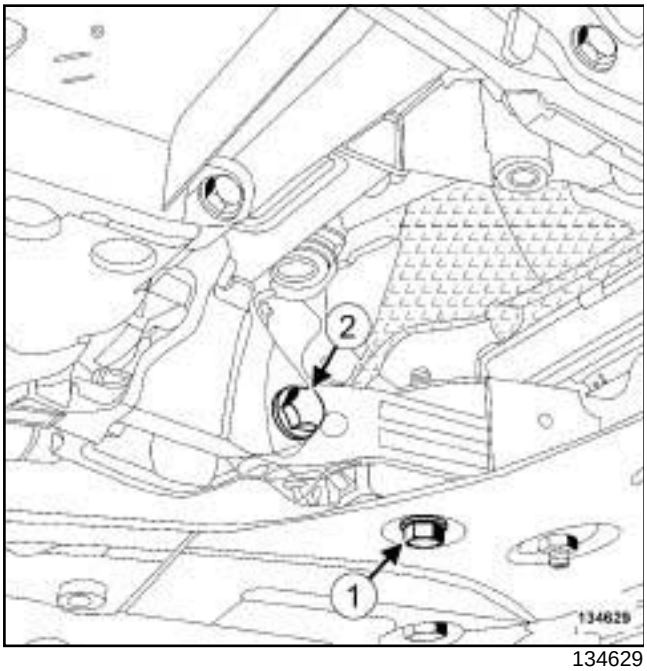

134629

❑ Remove:

- the bolt (**1**) from the lower engine tie-bar on the sub-frame,
- the bolt (**2**) mounting the lower engine tie-bar on its support,
- the lower engine tie-bar.

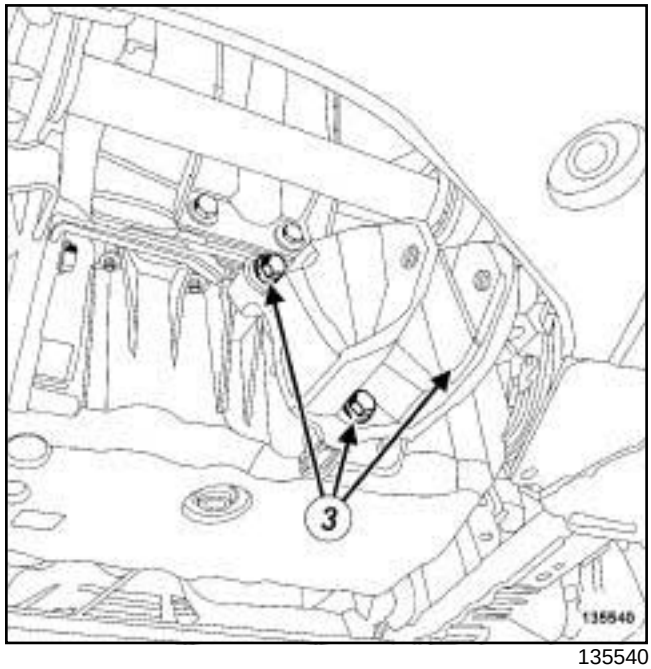

135540

❑ Remove:

- the bolts (**3**) from the lower engine tie-bar support,
- the lower engine tie-bar support.

REFITTING

I - REFITTING OPERATION FOR PART CONCERNED

❑ Refit:

- the lower engine tie-bar support,
- the lower engine tie-bar.

❑ Tighten to torque:

- the **engine tie-bar bolt on its support (180 N.m)**,
- the **engine tie-bar bolt on the subframe (180 N.m)**.

II - FINAL OPERATION

❑ Refit the engine undertray.

K4M

Tightening torques ▽	
lower engine tie-bar bolt on the gearbox	**105 N.m**
lower engine tie-bar bolt on the front axle sub-frame	**105 N.m**
reinforcement bolt securing the lower engine tie-bar to the gearbox	**105 N.m**

REMOVAL

I - REMOVAL PREPARATION OPERATION

❑ Position the vehicle on a two-post lift (see **Vehicle: Towing and lifting**) (02A, Lifting equipment).

❑ Remove:

- the engine undertray bolts,
- the engine undertray.

II - OPERATION FOR REMOVAL OF PART CONCERNED

K4M, and 848

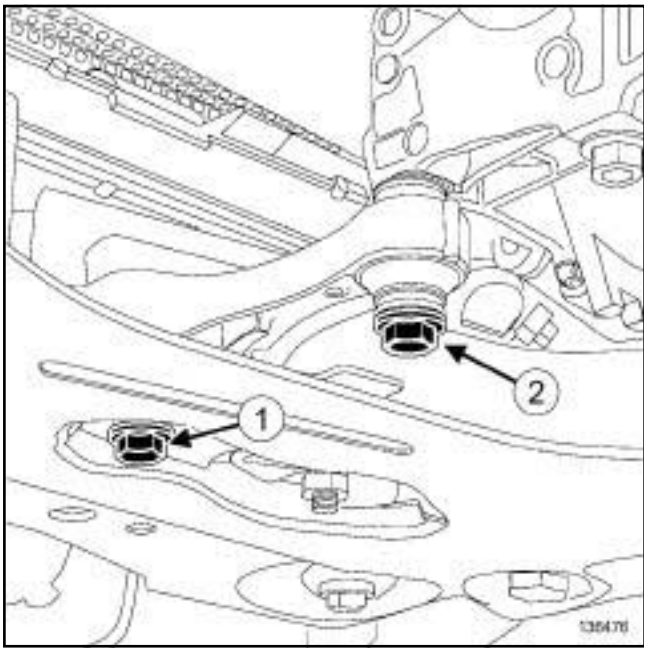

136476

❑ Remove:

- the bolt (**1**) of the lower engine tie-bar from the front axle subframe,
- the gearbox lower engine tie-bar bolt (**2**) ,
- the lower engine tie-bar.

K4M, and 858 or 866

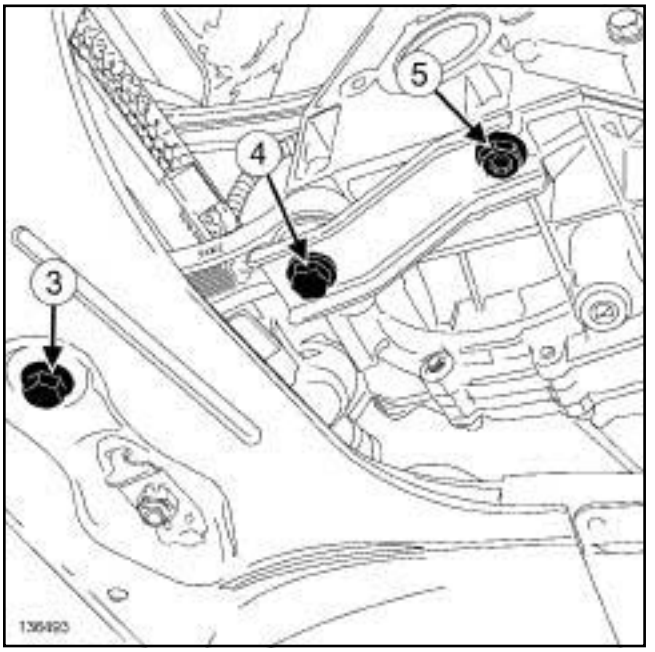

136493

❑ Remove:

- the bolt (**3**) of the lower engine tie-bar from the front axle subframe,
- the gearbox lower engine tie-bar bolt (**4**) ,
- the bolt (**5**) from the gearbox lower engine tie-bar reinforcement,
- the lower engine tie-bar with its reinforcement.

REFITTING

I - REFITTING OPERATION FOR PART CONCERNED

K4M, and 848

❑ Refit the lower engine tie-bar.

K4M

K4M, and 858 or 866

❑ Refit the lower engine tie-bar with its reinforcement.

❑ Tighten to torque:

- the **lower engine tie-bar bolt on the gearbox (105 N.m)**,
- the **lower engine tie-bar bolt on the front axle subframe (105 N.m)**.

K4M, and 858 or 866

❑ Torque tighten the **reinforcement bolt securing the lower engine tie-bar to the gearbox (105 N.m)**.

II - FINAL OPERATION

❑ Refit the engine undertray.