00 Safety information for working on vehicles with automatic engine start-stop function (MSA)

Warning!

If the engine hood/bonnet contact is pulled upwards (workshop mode), the information "switch closed" is output. The automatic engine start-stop function is active.

An automatic engine start is possible.

Observe safety precautions when working on MSA vehicles.

Before carrying out practical work on the engine, always ensure that the MSA functionality is deactivated so as to prevent automatic engine starting while work is being carried out in the engine compartment.

MSA function is deactivated by:

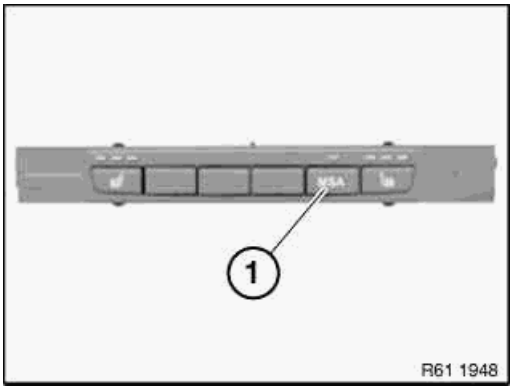

- Deactivate MSA by means of button (1) in passenger compartment
- Open seat belt buckle and driver's door

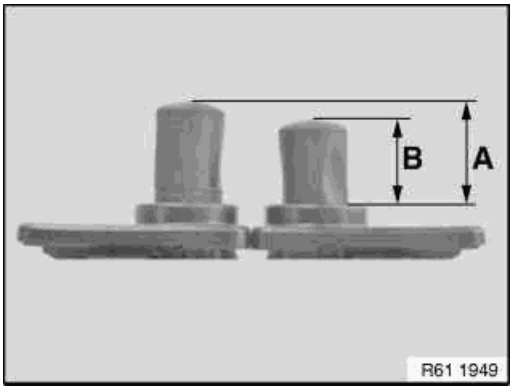

- Open engine bonnet/hood and ensure that engine hood/bonnet contact is not in workshop mode
  - Workshop mode

    A = 10 mm
  - Basic setting (engine hood/bonnet open)

    B = 7 mm

  To make sure that the engine hood/bonnet contact is at the basic setting, if necessary press the hood/bonnet contact up to the limit position before starting work and slowly release.

When working with diagnosis tools:

- Observe instructions in diagnosis tool

Note:
For further information on automatic engine start-stop function (MSA):

- Refer to the Service Information (bulletin) (for manual transmissions) Service Information (bulletin) 61 01 07 335
- Refer to the Service Information (bulletin) (for automatic transmissions or twin-clutch gearboxes) Service Information (bulletin) 61 01 10 629

13 31 028 Check fuel delivery pressure

1 – Check fuel delivery pressure

WARNING

Hot surfaces.

Risk of burning!

- Perform all work only on components that have cooled down.

WARNING

Working on fuel system.

Risk of fire! Danger of explosion!

- When working on the fuel system, make sure that the workbay is sufficiently ventilated, e.g. using extraction unit.
- Tightly seal off open lines and connections; collect any escaping fuel directly at the point of exit.
- No fire, sparks, open flames or smoking.

RISK OF DAMAGE

Contaminant or foreign body.

Contamination can result in malfunctions, operating failure or leaks.

- Adhere to the utmost cleanliness.
- Protect components from contamination e.g. by covering.
- Close off line connections with seal plugs.

TECHNICAL INFORMATION

Collect and dispose of emerging fluids. Observe country-specific waste disposal regulations.

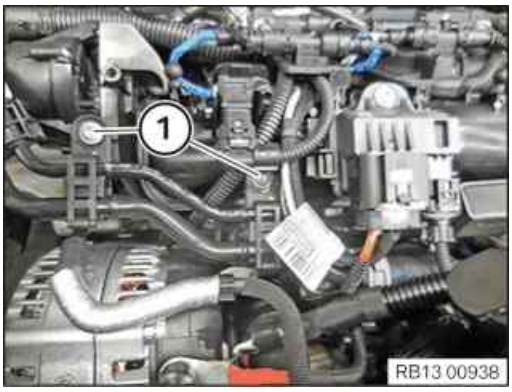

- Loosen screws (1).
- Lay fuel lines to one side.

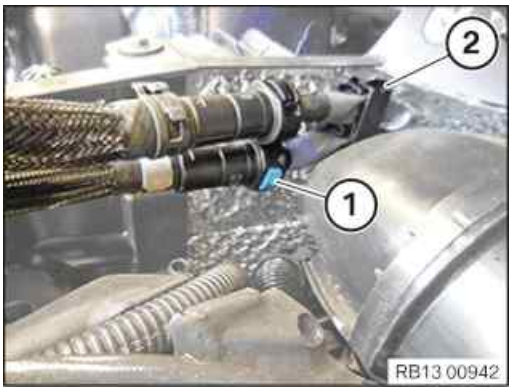

- Unlock and loosen clamp (2).
- Unlock and release fuel delivery line (1).
- Catch and dispose of escaping fuel.

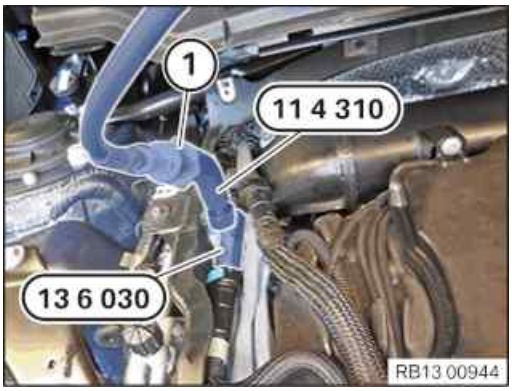

- Insert the special tool **0 494 464 (13 6 030)** into the disconnected fuel feed line.
- Screw onto special tool **0 494 464 (13 6 030)**, the special tool **0 496 623 (11 4 310)**.
- Screw the pressure sensor onto the special tool **0 496 623 (11 4 310)** 100 bar (IMIB) (1).

TECHNICAL INFORMATION

As an alternative to the **pressure sensor** with 100 bar **(IMIB)** , the **pressure sensor** with 25 bar may also be used.

Version 1: Screw the special tool **11 5 364** onto the special tool **13 6 030** (instead of special tool **11 4 310**).

Version 2: Screw the pressure gauge from the set of special tools **13 3 060** directly onto the special tool **13 6 030** .

- Establish fuel delivery pressure. Read the fuel delivery pressure on the Integrated Measurement Interface Box (IMIB) and compare it with the values in the diagnosis system.

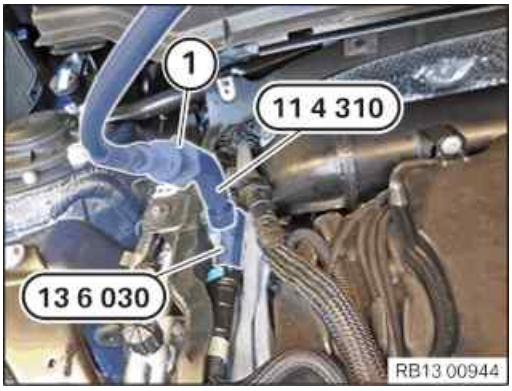

- After completing the measurement, disconnect and remove the special tool **0 494 464 (13 6 030)** with the special tool **0 496 623 (11 4 310)** and the pressure sensor (1) from the fuel feed line.
- Catch and dispose of escaping fuel in a suitable container.

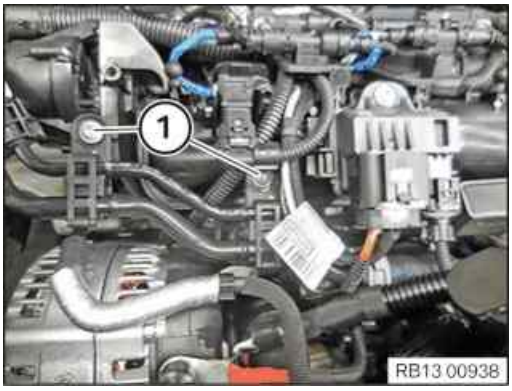

- Feed in fuel lines and install.
- Tighten the screws (1).

Fuel line to intake plenum

TS6x20		Tightening torque	5 Nm

Additional Information

Overview of Tightening Torques

Fuel line to intake plenum			Used in step 1
TS6x20		Tightening torque	5 Nm

Overview of Special Tools

0 494 464 (13 6 030) Adapter

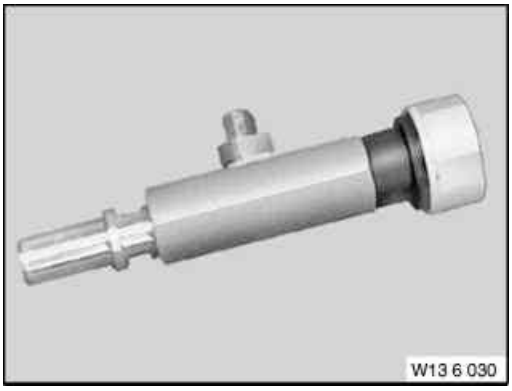

Common	Used in step 1
Usage	For measuring fuel pressure in return line
Included in the tool or work	
Storage location	A46
Replaced by	
In connection with	
SI-Number	01 11 02 (908)

0 496 623 (11 4 310) Adapter

Common	Used in step 1
Usage	For fuel pressure check. For variable camshaft timing control VANOS with Integrated Measurement Interface Box IMIB (100 bar sensor in delivery specification). In combination with 11 5 360.
Included in the tool or work	
Storage location	B26
Replaced by	
In connection with	11 5 360 = 0495130
SI-Number	01 27 09 (598)

13 31 028 Checking fuel delivery pressure (B37, B47)

Special tools required:

- 13 6 030
- 11 4 310
- 11 5 364
- 13 3 060

Recycling:

Catch and dispose of escaping fuel in a suitable container.

Observe country-specific waste disposal regulations.

Necessary preliminary work:

- Remove upper bulkhead cover.
- Remove acoustic cover
- Connect BMW diagnosis system.

Removal:

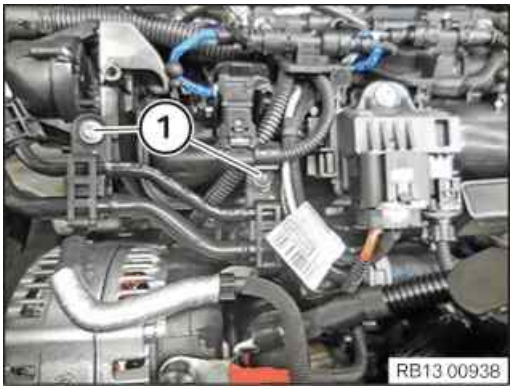

Loosen screws (1).

Lay fuel lines to one side.

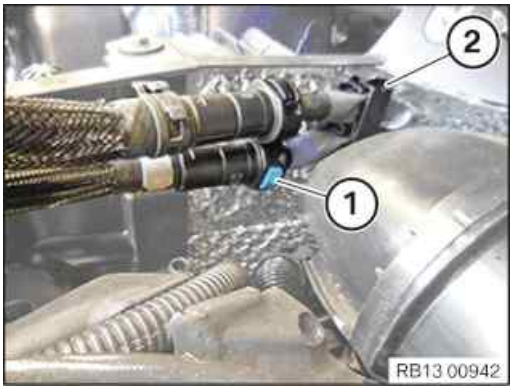

Unlock and release clamp (2).

Unlock and release fuel delivery line (1).

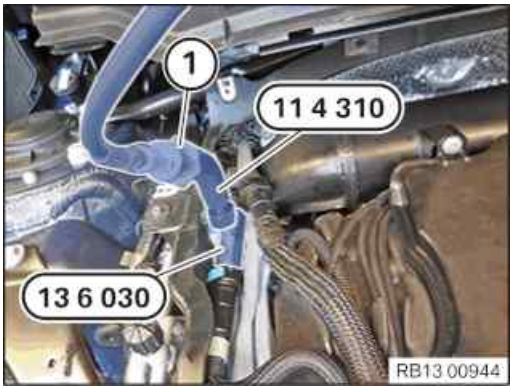

Insert special tool 13 6 030 into disconnected feed line.

Screw onto special tool 13 6 030 , the special tool 11 4 310 .

Screw IMIB 100 bar pressure sensor (1) onto special tool 11 4 310 (**Integrated Measurement Interface Box**).

Note:
The 25-bar pressure sensor can also be used as an alternative to the IMIB-100-bar pressure sensor (1). For this, screw on special tool 11 5 364 instead of special tool 11 4 310 into special tool 13 6 030 . Or directly screw the pressure gauge from the set of special tools 13 3 060 onto the special tool 13 3 060 .

Establish fuel delivery pressure. Read off fuel delivery pressure on **Integrated Measurement Interface Box** and compare with values in BMW diagnosis system.

Installation:

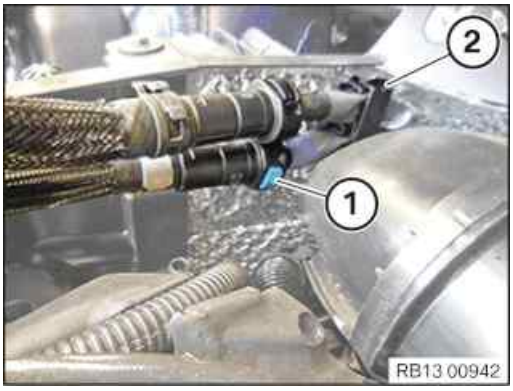

Connect and lock fuel delivery line (1).

Fuel delivery line (1) must snap audibly into place.

Connect clamp (2) and lock.

Clamp (2) must audibly snap into place.

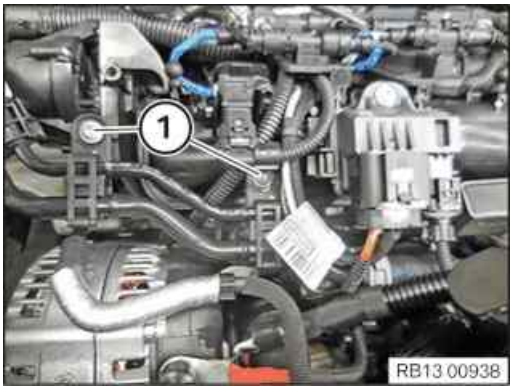

Tighten down screws (1).

Tightening torque 13 53 7AZ.

Required reworking:

- Install upper bulkhead cover.
- Install acoustic cover.
- Connect BMW diagnosis system.

Check fuel system for leak tightness.

Reassemble the vehicle.

13 31 025 Checking fuel return pressure

1 – Checking fuel return pressure

WARNING

Hot surfaces.

Risk of burning!

- Perform all work only on components that have cooled down.

WARNING

Working on fuel system.

Risk of fire! Danger of explosion!

- When working on the fuel system, make sure that the workbay is sufficiently ventilated, e.g. using extraction unit.
- Tightly seal off open lines and connections; collect any escaping fuel directly at the point of exit.
- No fire, sparks, open flames or smoking.

RISK OF DAMAGE

Contaminant or foreign body.

Contamination can result in malfunctions, operating failure or leaks.

- Adhere to the utmost cleanliness.
- Protect components from contamination e.g. by covering.
- Close off line connections with seal plugs.

TECHNICAL INFORMATION

Collect and dispose of emerging fluids. Observe country-specific waste disposal regulations.

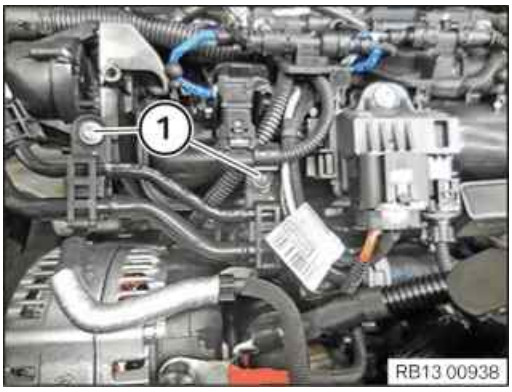

- Loosen screws (1).
- Lay fuel lines to one side.

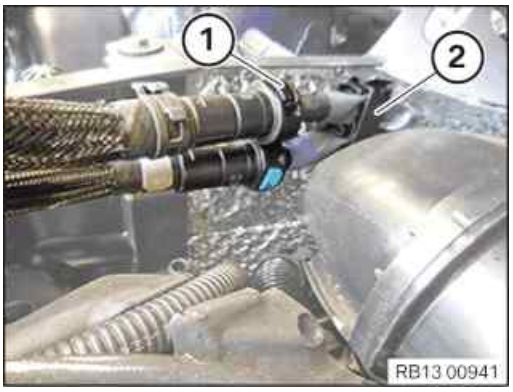

- Unlock and loosen clamp (2).
- Unlock and release fuel return line (1).
- Catch and dispose of escaping fuel.

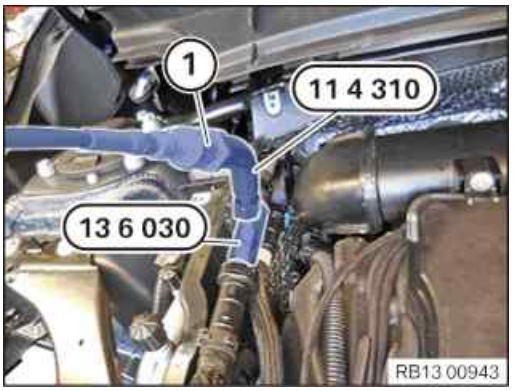

- Insert the special tool **0 494 464 (13 6 030)** into the disconnected fuel return line.
- Screw onto special tool **0 494 464 (13 6 030)**, the special tool **0 496 623 (11 4 310)**.
- Screw the pressure sensor onto the special tool **0 496 623 (11 4 310)** 100 bar (IMIB) (1).

TECHNICAL INFORMATION

As an alternative to the **pressure sensor** with 100 bar **(IMIB)** , the **pressure sensor** with 25 bar may also be used.

Version 1: Screw the special tool **11 5 364** onto the special tool **13 6 030** (instead of special tool **11 4 310**).

Version 2: Screw the pressure gauge from the set of special tools **13 3 060** directly onto the special tool **13 6 030** .

- Build up fuel return pressure. Read the fuel return pressure on the Integrated Measurement Interface Box (IMIB) and compare it with the values in the diagnosis system.

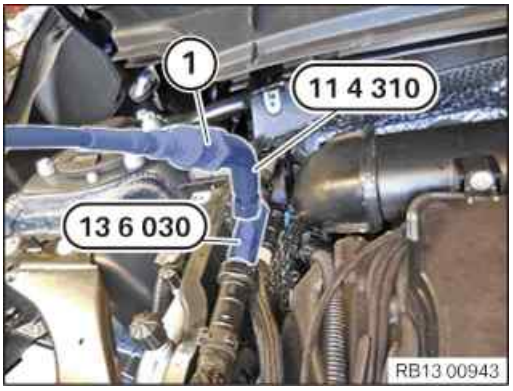

- After completing the measurement, disconnect and remove the special tool **0 494 464 (13 6 030)** with the special tool **0 496 623 (11 4 310)** and the pressure sensor (1) from the fuel return line.
- Catch and dispose of escaping fuel in a suitable container.

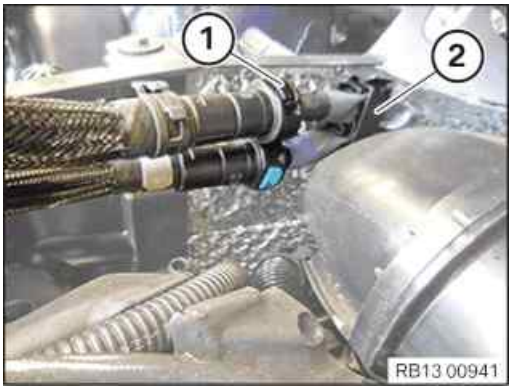

- Connect and lock fuel return line (1).

  The fuel return line (1) must audibly engage.
- Connect and lock the clamp (2).

  Clamp (2) must engage audibly.
- Check fuel system for leak tightness, visual inspection.

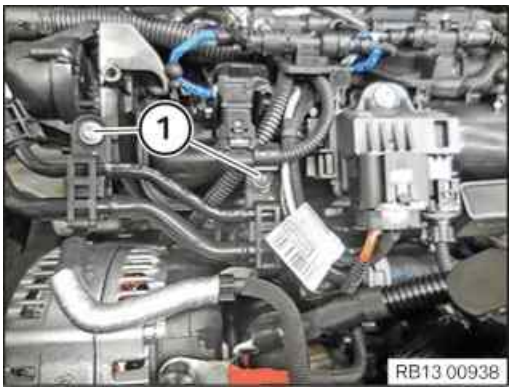

- Feed in fuel lines and install.
- Tighten the screws (1).

Fuel line to intake plenum

TS6x20		Tightening torque	5 Nm

Additional Information

Overview of Tightening Torques

Fuel line to intake plenum Used in step 1

TS6x20		Tightening torque	5 Nm

Overview of Special Tools

0 494 464 (13 6 030) Adapter

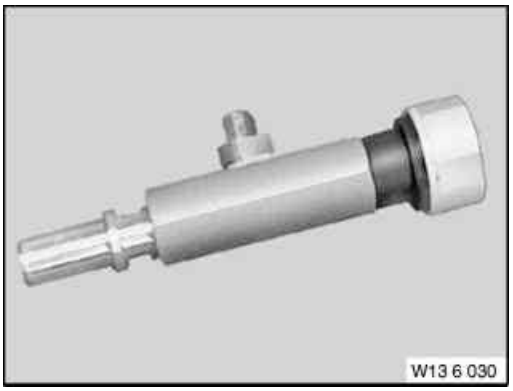

Common Used in step 1

Usage	For measuring fuel pressure in return line
Included in the tool or work	
Storage location	A46
Replaced by	
In connection with	
SI-Number	01 11 02 (908)

0 496 623 (11 4 310) Adapter

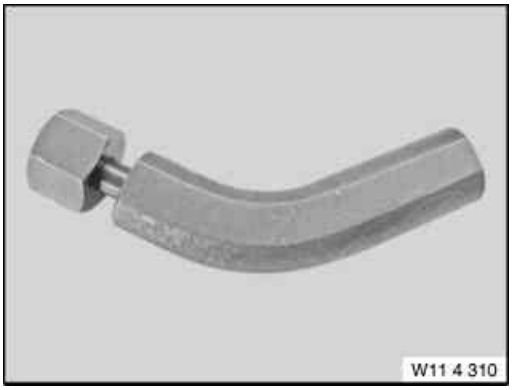

Common Used in step 1

Usage	For fuel pressure check. For variable camshaft timing control VANOS with Integrated Measurement Interface Box IMIB (100 bar sensor in delivery specification). In combination with 11 5 360.
Included in the tool or work	
Storage location	B26
Replaced by	
In connection with	11 5 360 = 0495130
SI-Number	01 27 09 (598)

13 31 025 Checking fuel return pressure (B37, B47)

Special tools required:

- 13 5 222
- 13 6 030
- 11 4 310
- 11 5 364
- 13 3 060

Recycling:

Catch and dispose of escaping fuel in a suitable container.

Observe country-specific waste disposal regulations.

Necessary preliminary work:

- Remove top bulkhead cover.
- Remove acoustic cover
- Connect BMW diagnosis system.

Removal:

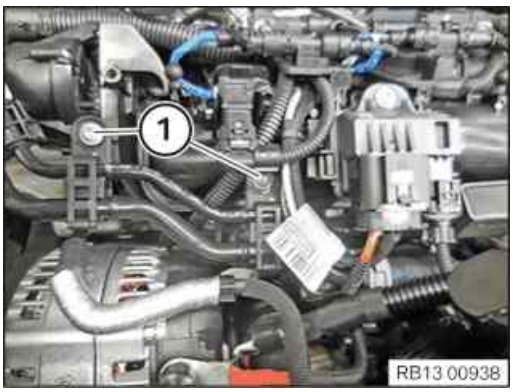

Loosen screws (1).

Lay fuel lines to one side.

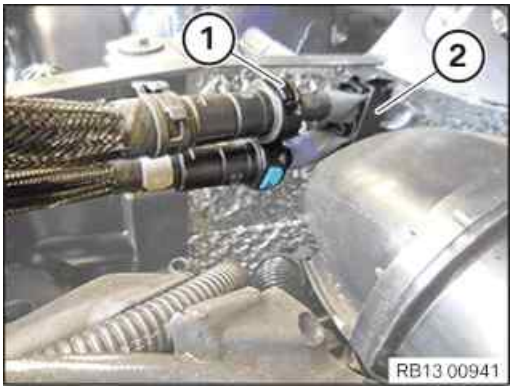

Unlock and release clamp (2).

Unlock and release fuel return line (1).

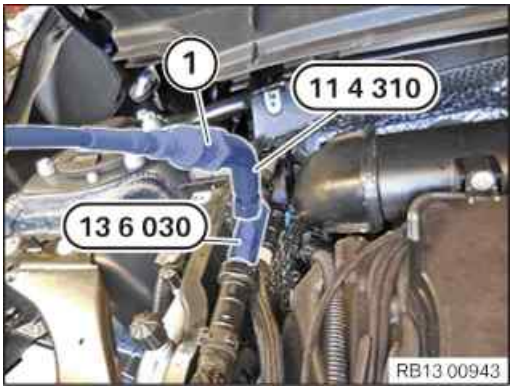

Insert special tool 13 6 030 into the disconnected return line.

Screw onto special tool 13 6 030 , the special tool 11 4 310 .

Screw IMIB 100 bar pressure sensor (1) (**Integrated Measurement Interface Box**) on special tool 11 4 310 .

Note:
The 25-bar pressure sensor can also be used as an alternative to the IMIB-100-bar pressure sensor (1). For this, screw on special tool 11 5 364 instead of special tool 11 4 310 into special tool 13 6 030 . Or directly screw the pressure gauge from the set of special tools 13 3 060 onto the special tool 13 6 030 .

Build up fuel return pressure. Read off the fuel return pressure at the **Integrated Measurement Interface Box** and compare with the values in the BMW diagnosis system.

Installation:

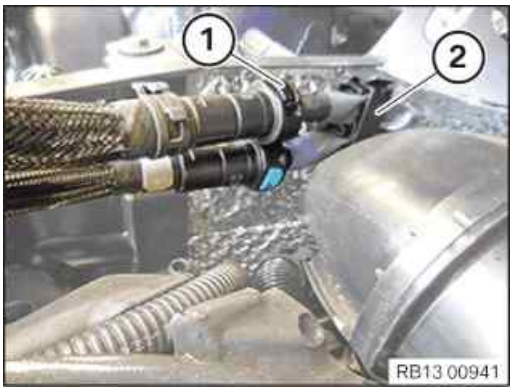

Connect and lock fuel return line (1).

Fuel return line (1) must audibly engage.

Connect clamp (2) and lock.

Clamp (2) must audibly snap into place.

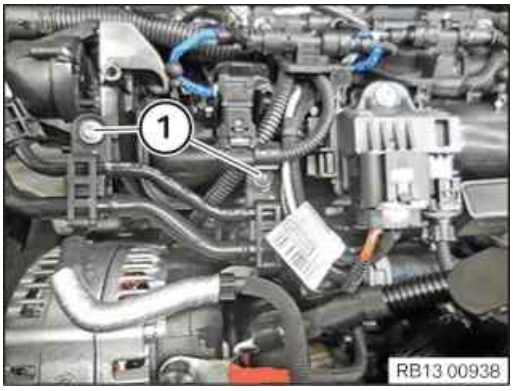

Tighten down screws (1).

Tightening torque 13 53 7AZ.

Required reworking:

- Install top bulkhead cover.
- Install acoustic cover.

Check fuel system for leak tightness.

Reassemble the vehicle.

13 32 051 Replacing fuel filter (B37, B47)

Recycling:

Catch and dispose of escaping fuel.

Observe country-specific waste disposal regulations.

Necessary preliminary work:

- Remove right vehicle underbody cover

Removal:

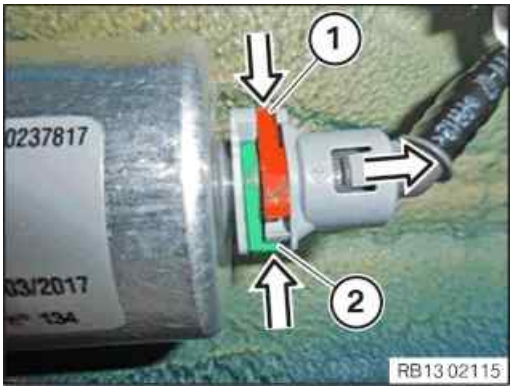

Press the snap fastener in direction of the fuel filter. Next, press retaining lugs (1) and (2) and pull off the snap fastener in direction of arrow.

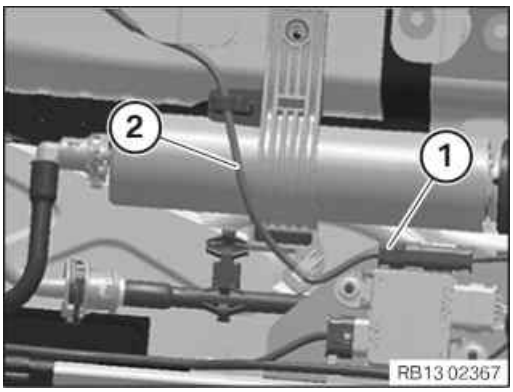

If fitted:

Unlock connector (1) and pull off.

Detach cable (2) from the clamp and put to one side.

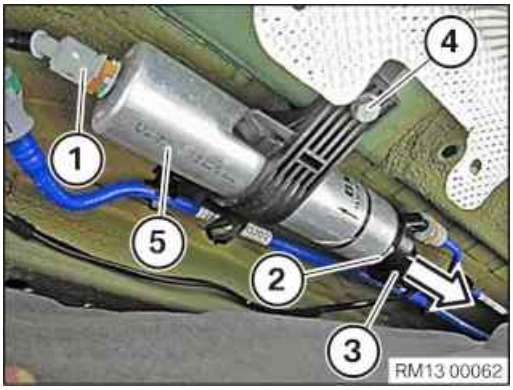

Unlock and detach fuel line (1) as shown above.

Release clamp (2).

Disconnect fuel preheating (3) from fuel filter.

Release screw and remove holder (4).

Remove fuel filter (5).

Installation:

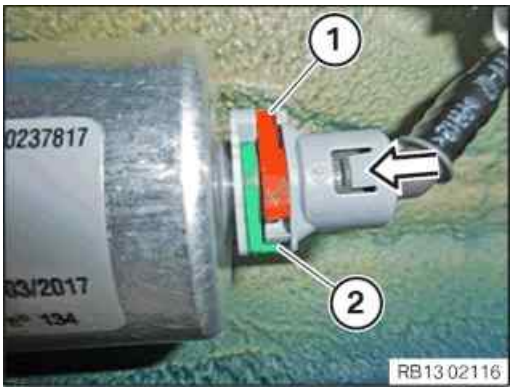

Locking tabs (1) and (2) must be locked.

Mount the snap fastener and lock.

Attention!

Check locks of snap fastener for damage, and replace if necessary!

Snap fastener must be felt and heard to snap into place.

Ensure correct locking of the snap fastener by means of a countermove test.

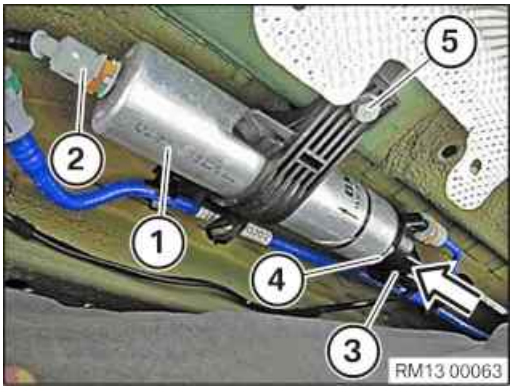

Install new fuel filter (1).

Connect and lock fuel line (2) as shown above.

Connect fuel preheating (3) to fuel filter and secure with clamp (4).

Install holder and tighten screw (5).

Tightening torque 13 32 1AZ.

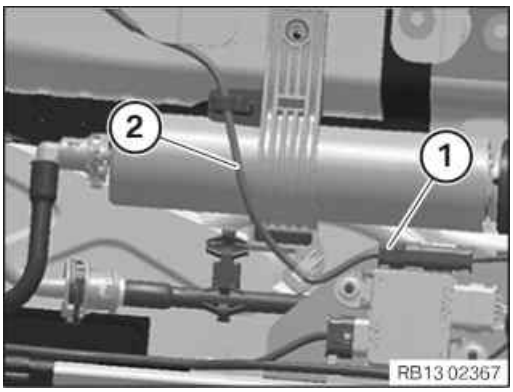

If fitted:

Lay the cable (2) and secure to the clamps.

Connect and audibly lock the connector (1).

Required reworking:

- Check fuel system for leaks.
- Install right vehicle underbody cover

13 32 051 Replacing the fuel filter

NOTICE

Schematic diagram is for example purposes. Some parts may differ in certain details.

PRELIMINARY WORK

1 – If installed: Removing rear underbody protection

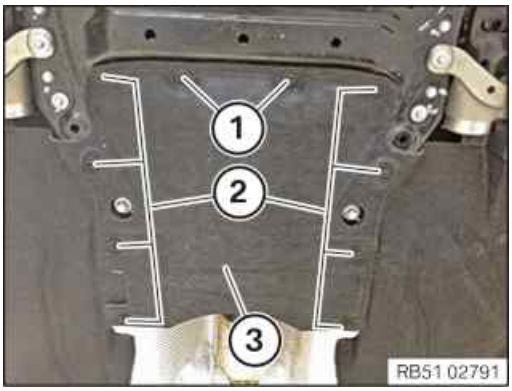

- Loosen screws (1) and (2).
- Remove underbody protection (3).

2 – Removing right underbody panelling

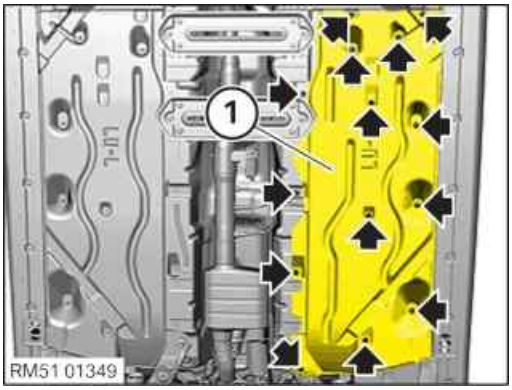

- Unscrew all bolts and nuts (arrows).
- Remove the underbody panelling (1).

MAIN WORK

3 – Removing the fuel filter

WARNING

Working on fuel system.

Risk of fire! Danger of explosion!

- When working on the fuel system, make sure that the workbay is sufficiently ventilated, e.g. using extraction unit.
- Tightly seal off open lines and connections; collect any escaping fuel directly at the point of exit.
- No fire, sparks, open flames or smoking.

RISK OF DAMAGE

Contaminant or foreign body.

Contamination can result in malfunctions, operating failure or leaks.

- Adhere to the utmost cleanliness.
- Protect components from contamination e.g. by covering.
- Close off line connections with seal plugs.

TECHNICAL INFORMATION

Collect and dispose of emerging fluids. Observe country-specific waste disposal regulations.

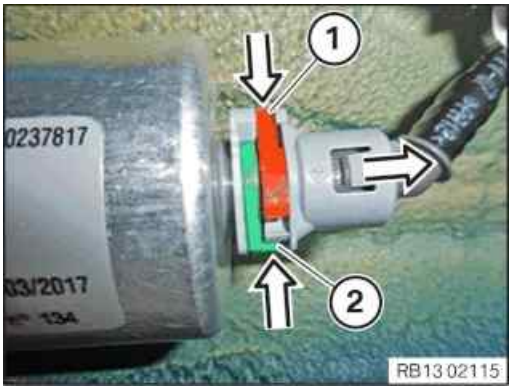

- Press the snap fastener in direction of the fuel filter. Next, press retaining lugs (1) and (2) and pull off the snap fastener in direction of arrow.

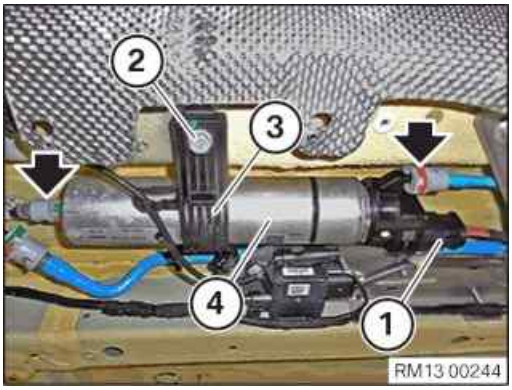

- Unlock and disconnect the fuel lines (arrows) as described above.
- Unlock and disconnect connector (1).
- Loosen screw (2).
- Guide out and remove holder (3).
- Guide out and remove fuel filter (4).

4 – Replace fuel filter

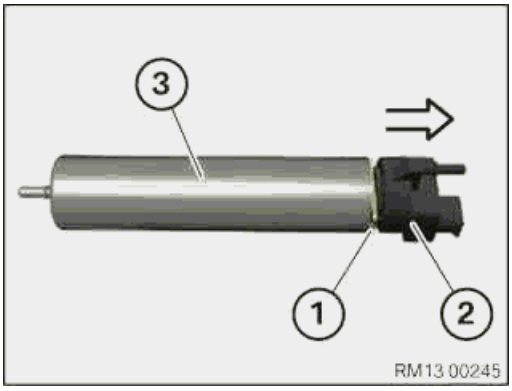

- Loosen clamp (1).
- Guide the fuel preheating (2) out of the fuel filter (3) in the direction of the arrow and remove.
- Renew fuel filter (3).

  Parts: Fuel filter

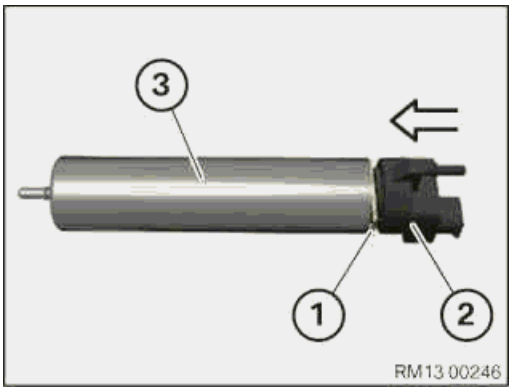

- Guide the fuel preheating (2) into the fuel filter (3) in the direction of the arrow and remove.
- Installing clamp (1).

5 – Installing the fuel filter

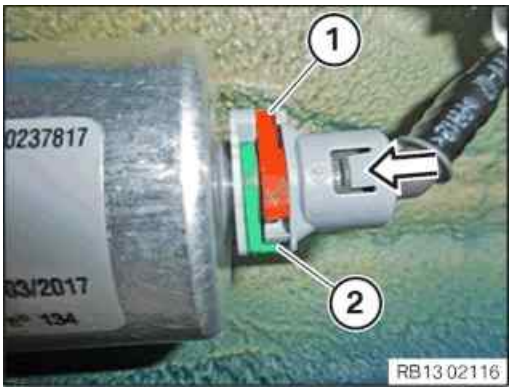

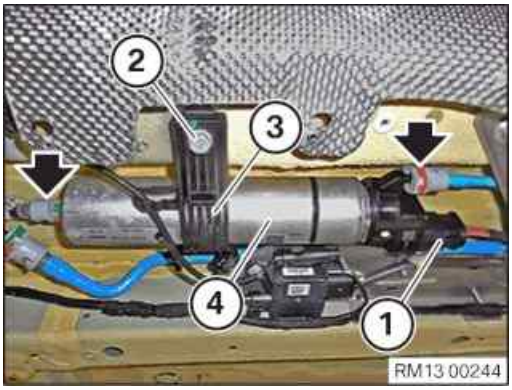

TECHNICAL INFORMATION

Check locks of snap fastener for damage, and replace if necessary!
Snap fastener must be felt and heard to snap into place.
Ensure correct locking of snap fastener with a tensile test.

- The locking tab (1) and (2) must be locked.

  Mount the snap fastener and lock.
- Insert and install the fuel filter (4).
- Insert and install the holder (3).
- Tighten down screw (2).

Fuel filter bracket to console

Hexagon screw M8x25		Tightening torque	19 Nm

- Connect connectors (1) and lock.

  The connector (1) must engage audibly.
- Connect and lock fuel lines (arrows) as described above.

  Fuel lines (arrows) must engage audibly.

6 – If installed: Installing underbody protection at rear

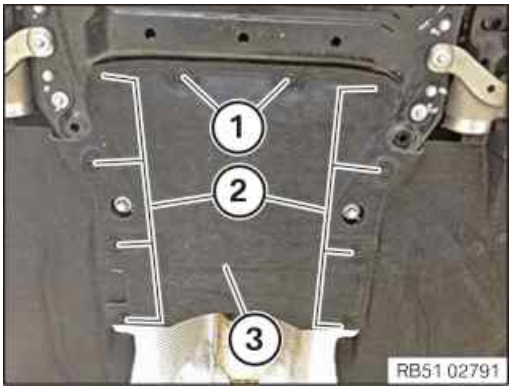

- Install the underbody protection (3).
- Tighten down screws (1) and (2).

Underbody protection to body

Screw		Tightening torque	3 Nm

7 – Installing underbody panelling , right

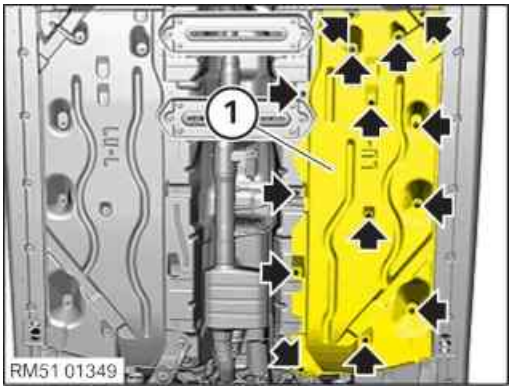

- Correctly position the underbody panelling (1).
- Tighten all bolts and nuts (arrows).

Underbody panelling, side

Hexagon screw		Tightening torque	2,6 Nm

Underbody panelling, side

Plastic nut		Tightening torque	2,6 Nm

Additional Information

Overview of Tightening Torques

Fuel filter bracket to console — Used in step 5

Hexagon screw M8x25		Tightening torque	19 Nm

Underbody protection to body — Used in step 6

Screw		Tightening torque	3 Nm

Underbody panelling, side — Used in step 7

Hexagon screw		Tightening torque	2,6 Nm

Underbody panelling, side — Used in step 7

Plastic nut		Tightening torque	2,6 Nm

13 51 004 Removing and installing / replacing high-pressure pump (B37, B47)

Special tools required:

- 32 1 270
- 11 8 031
- 2 361 594
- 11 8 032
- 2 359 956

Attention!

Special tool 11 8 031 must - after it has been installed - without fail remain bolted in the sprocket wheel until all repair work has been completed.

When working on the fuel circuit, you must protect the alternator against dirt contamination.

Cover alternator with suitable materials. Failure to comply with this procedure may result in an alternator malfunction.

Note:
After disconnecting the fuel injection line, it is absolutely essential to seal the high pressure pump and the high-pressure accumulator with protective caps 2 361 594 .

The position of the high pressure pump in relation to the valve gear does not affect its function. However, it must be taken into account on removal and installation.

Recycling:

Catch and dispose of escaping fuel.

Observe country-specific waste disposal regulations.

Necessary preliminary tasks:

- Switch off ignition.
- Remove connecting branch at crankcase.
- Remove pressure line between high pressure pump and pressure accumulator.
- Secure **crankshaft position** in **firing TDC**, for more information refer to document Checking timing.

Removal:

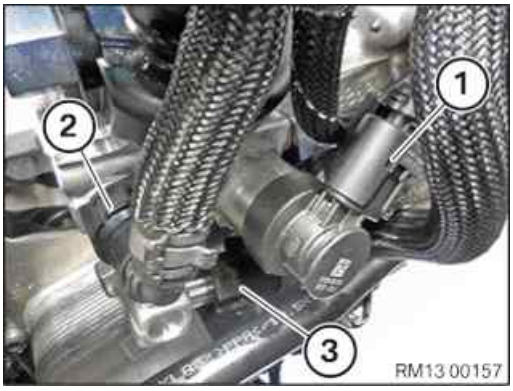

Unlock and pull off connector (1) on high pressure pump.

Unlock and pull off fuel delivery line (2) and return line (3) from high pressure pump.

Catch and dispose of escaping fuel.

Undo sealing cap (1) on timing case.

Screw in special tool 11 8 031 for positioning the camshaft sprocket of the high pressure pump.

The remove special tool 11 8 032 .

Special tool 11 8 031 remains in the timing case until the end of the repair work.

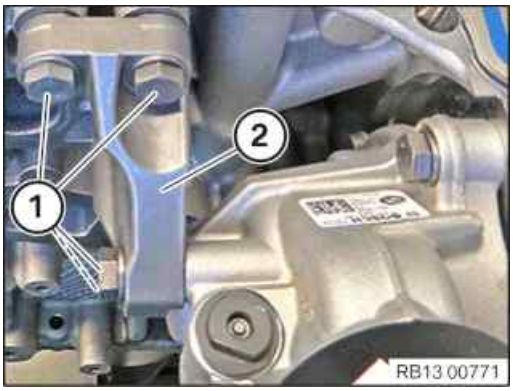

Release screws (1).

Remove high pressure pump support (2).

Release screw (1) at the top of the high pressure pump.

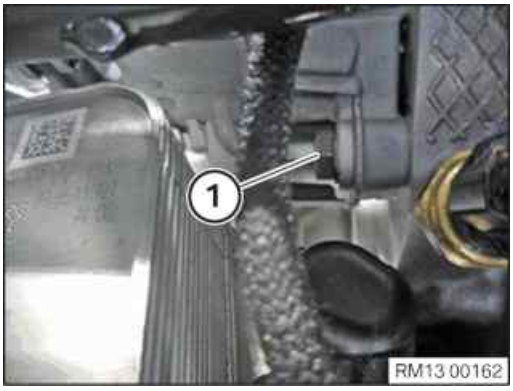

Release screw (1) at the bottom of the high pressure pump.

Attention!

The special tool 11 8 031 **remains** in the timing case.

Central screw remains in sprocket wheel.

Release screw connection between high pressure pump and camshaft sprocket.

Note:
Central bolt is supported on special tool 11 8 031 until high pressure pump is pressed out.

Remove high pressure pump.

Preparation for installation:

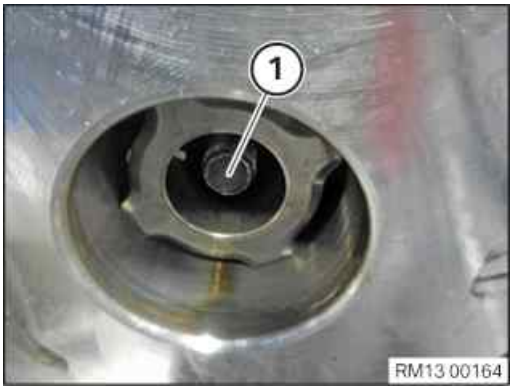

To insert the high pressure pump shaft in the camshaft sprocket with central bolt (1), it may be necessary to swing the high pressure pump through several degrees (spline groove-lug fit).

Then rotate high pressure pump back into screwing position.

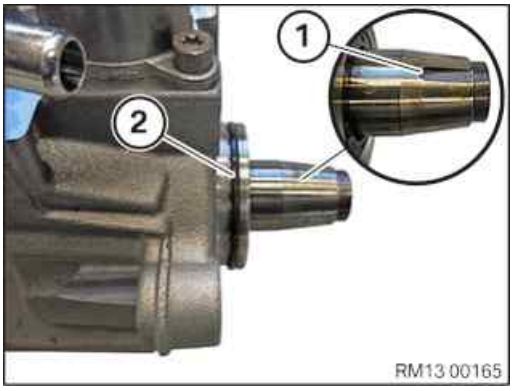

Replacing high pressure pump:

When installing a **new** high pressure pump (2), the assignment high pressure pump - camshaft sprocket needs to be **adapted**.

It may be necessary to twist the shaft with the groove (1).

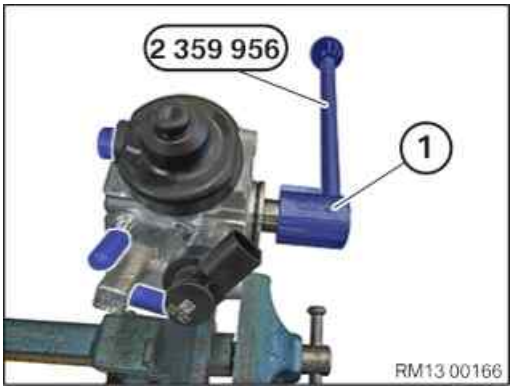

Rotate the shaft of the high pressure pump clockwise (top view) using the special tool (1) 2 359 956 until the assignment high pressure pump - camshaft sprocket is adapted.

Do not damage the shaft, especially the taper.

Installation:

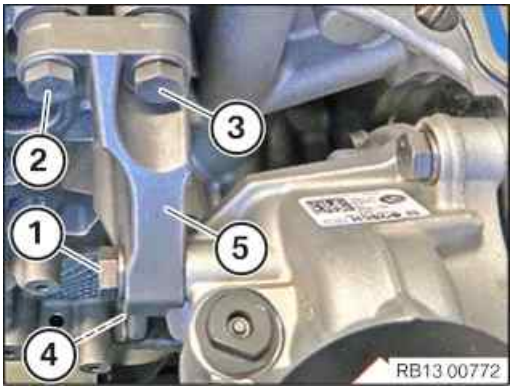

Insert the high pressure pump in the camshaft sprocket and position the central bolt.

Observe sequence for fastening screws when installing high pressure pump support (5).

1. Tighten down to head (gap-free) hand-tight, sequence 1--2--3--4
2. Tighten to final torque, sequence 2-3-4-1

Tightening torque 13 51 2AZ.

Tighten screw (1) at the top of the high pressure pump.

Tightening torque 13 51 4AZ.

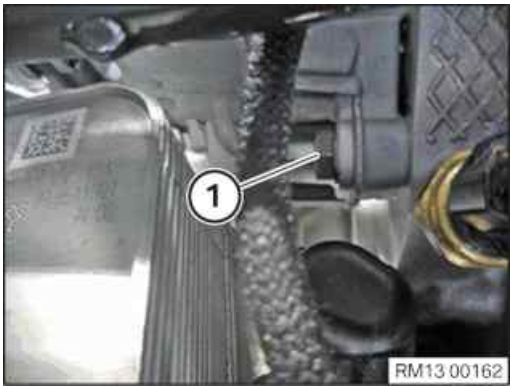

Tighten screw (1) at the bottom of the high pressure pump.
Tightening torque 13 51 4AZ.

Tighten the central bolt using torque wrench.
Tightening torque 13 52 2AZ.

Insert special tool 11 8 032 into special tool 11 8 031 .
Unscrew and remove special tool 11 8 031 .

Renew sealing cap (1) with O-ring.
Part: Sealing cap with O-ring
Install sealing cap (1) on timing case and tighten.
Tightening torque 13 51 5AZ.

Required follow-up work:

- Install connecting branch at crankcase.
- Install pressure line between high pressure pump and pressure accumulator.
- Remove special tool for securing of **crankshaft position** in **firing TDC**. For more information refer to document Checking timing.
- Bleed fuel system using BMW diagnosis system.
- Check fuel system for leak tightness.
- Reset adaptation of electric fuel pump with BMW diagnosis system.

13 51 017 Removing and installing high pressure pump

WARNING

Hot surfaces.

Risk of burning!

- Perform all work only on components that have cooled down.

PRELIMINARY WORK

1 – Disconnecting all battery earth leads

- See additional information.

2 – Remove the seal for the rear bonnet

NOTICE

Schematic diagram is for example purposes. Some parts may differ in certain details.

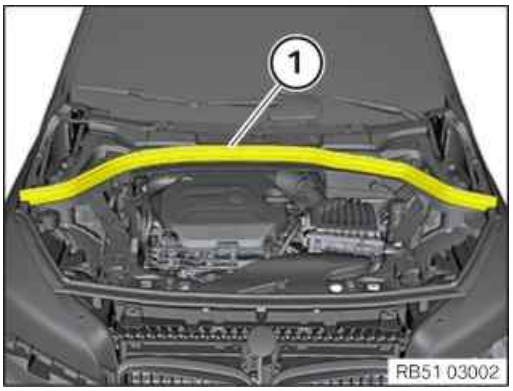

- Pull off rear bonnet seal (1) towards the top and remove.

3 – Removing front cowl panel cover

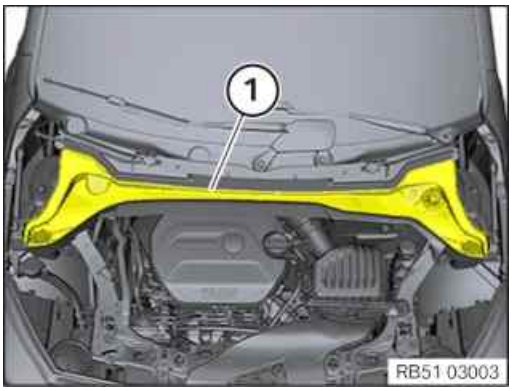

- Guide the front cowl panel cover (1) out toward the top and remove it.

4 – Remove left and right wiper arm

NOTICE

Description is for left component only. Procedure on the right side is identical.

▸ **Remove the wiper arm**

RISK OF DAMAGE

Damage to wiper console

While removing the wiper arms without using special tool, the wiper console can break.

- Removing the wiper arms must be carried out only using the prescribed special tool.
- Do not lift off wiper arm, else the wiper console may break on the predetermined breaking point for the pedestrian protection.

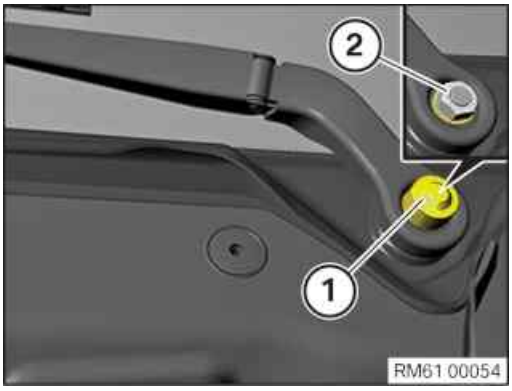

- Remove the protective cap (1).
- Loosen nut (2).

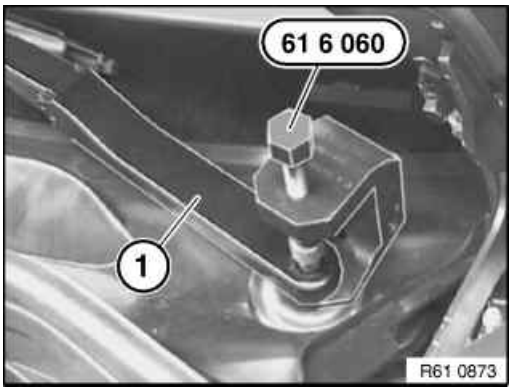

- Pull off the wiper arm (1) using special tool .

5 – Remove the gutter strip on the windscreen on the left and right

NOTICE

Description is for left component only. Procedure on the right side is identical.

▸ **Remove the gutter strip on the windscreen**

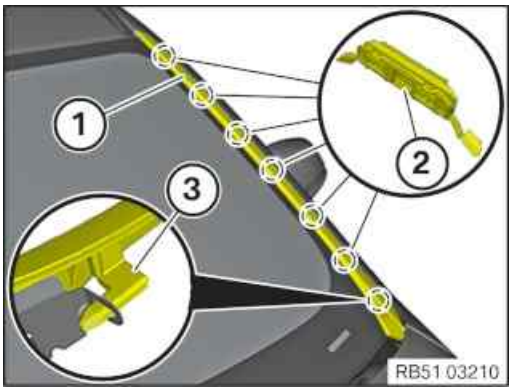

- Unclip the gutter strip (1) from the clips (2) beginning at the roof to the top.
- Feed the gutter strip (1) out of the guide (3).

6 – Remove the rear cowl panel cover

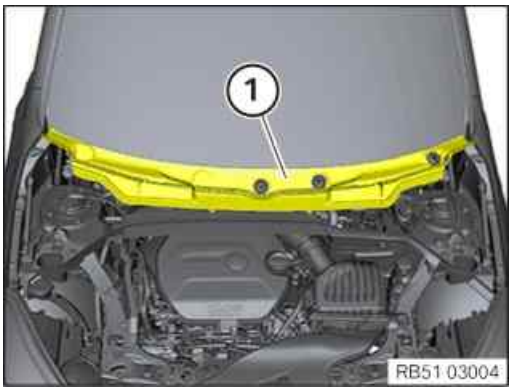

- Disengage and guide out the rear cowl panel cover (1) towards the top.

7 – Removing the upper bulkhead cover

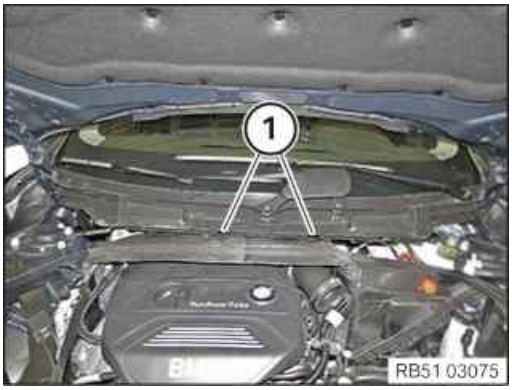

- Loosen screws (1).

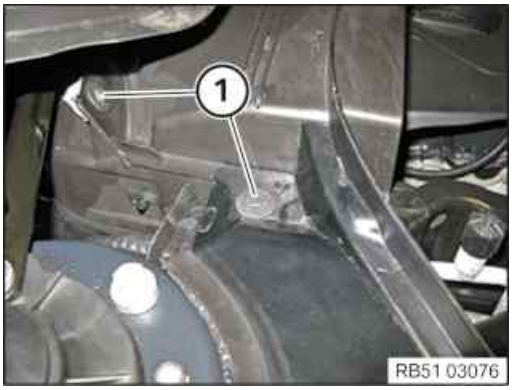

- Loosen screws (1).

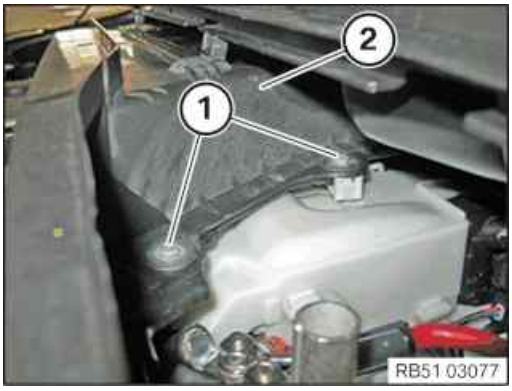

- Loosen screws (1).
- Feed out and remove the upper bulkhead cover (2).

8 – Removing the acoustic cover

WARNING

Hot surfaces.

Risk of burning!

- Perform all work only on components that have cooled down.

RISK OF DAMAGE

Damage to the acoustic cover.

Jerky movements during disassembly and excessive application of force during installation may result in breakage of the acoustic cover.

- Disassemble or mount the acoustic cover carefully.
- Disassemble or mount snap-lock couplings of the ball pivots one after the other.
- Disassemble or mount acoustic cover only at temperatures >20 °C.
- Use only distilled water as an auxiliary material during installation, no lubricants.

- Unclip the acoustic cover from the marked areas towards the top.

9 – Remove resonator

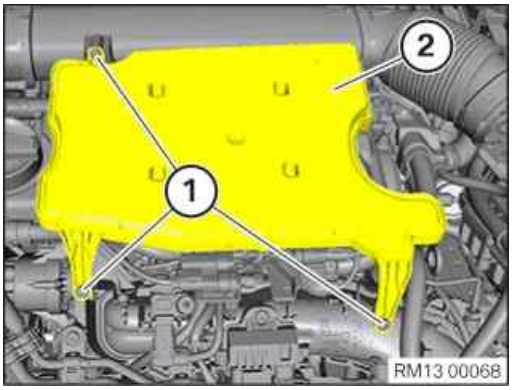

- Loosen screws (1).
- Guide out and remove the resonator (2).

10 – Remove the acoustic cover for the injectors

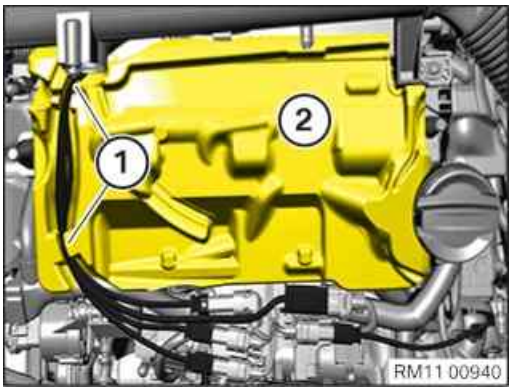

- Release the wiring harness (1) from the brackets.
- Guide the acoustic cover (2) out and remove.

11 – Remove the intake neck for intake silencer housing

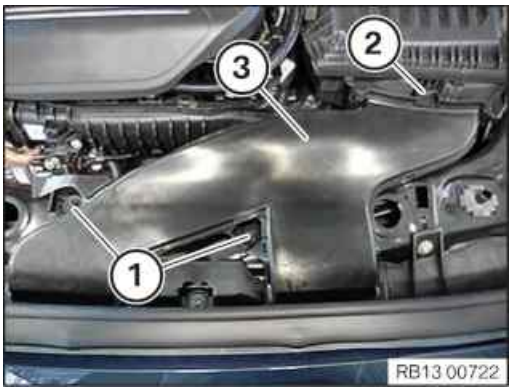

- Loosen nuts (1).
- Loosen the lock (2).
- Guide the intake neck (3) out and remove it.

12 – Removing intake silencer housing

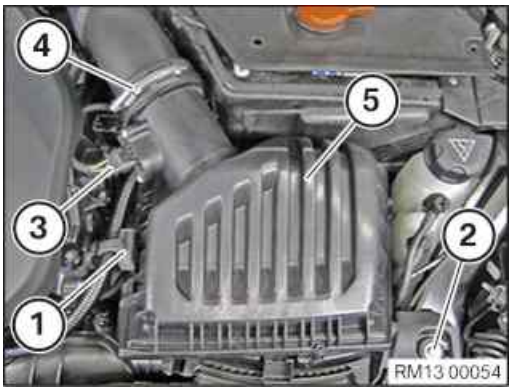

- Loosen the holder (1).
- Loosen screw (2).
- Unlock and loosen connector (3).
- Unfasten clamp (4).
- Pull out and remove the intake silencer housing (5) from the rubber mounts towards the top.

13 – Removing the front underbody protection

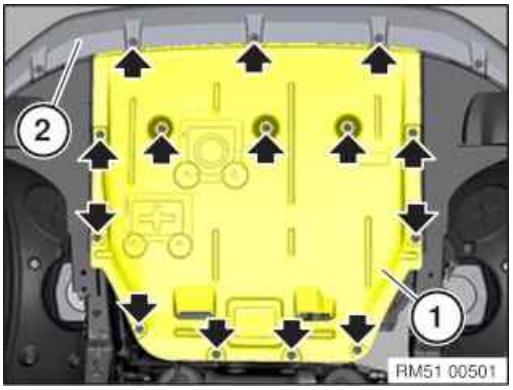

- Remove screws (arrows).
- Pull out and remove front underbody protection (1) under the bumper panel (2).

14 – Remove cross connection

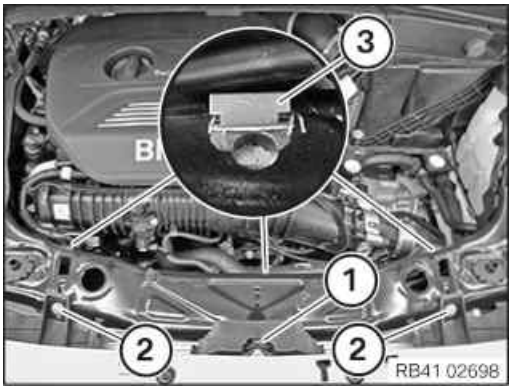

- Loosen screws (1) and (2).
- Detach clamps (3) for bonnet lock Bowden cable.

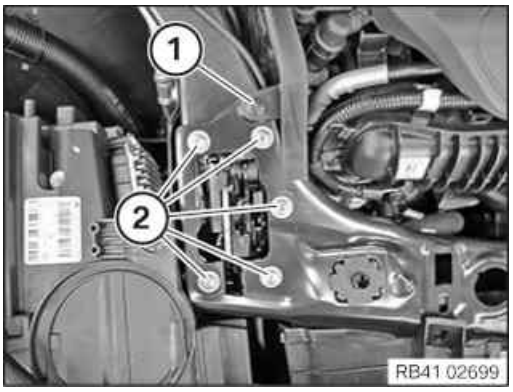

- Lever out expanding rivet (1).
- Loosen screws (2).

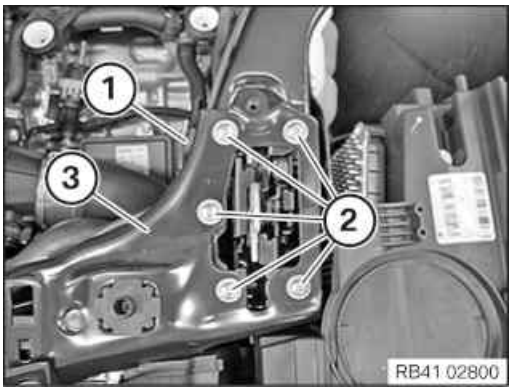

- Lever out expanding rivet (1).
- Loosen the screws (2) and remove the cross connection (3).

15 – Draining coolant

WARNING

Hot fluids.

Risk of scalding!

- Conduct all work in the vehicle wearing appropriate personal protective equipment only.

TECHNICAL INFORMATION

Life-long fill of coolant!

Do not reuse used coolant.

When replacing and removing components which rely on the corrosion protection effect of the coolant, it is essential to change the coolant. The cooling system must therefore be emptied and refilled.

In the case of other removal work involving the draining of part quantities of coolant, the coolant level must be topped up with new coolant.

TECHNICAL INFORMATION

Collect and dispose of emerging fluids. Observe country-specific waste disposal regulations.

- Loosen sealing cap (1).

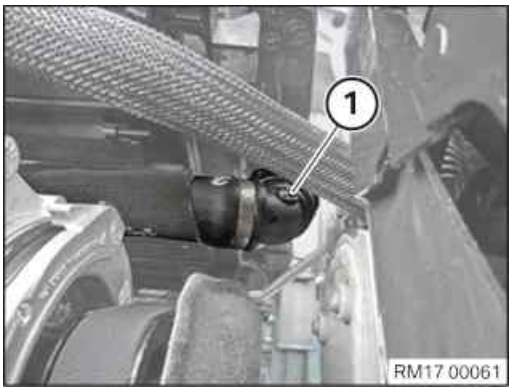

- Unlock and disconnect the coolant line (1) from the radiator on the right.
- Catch and dispose of escaping coolant.

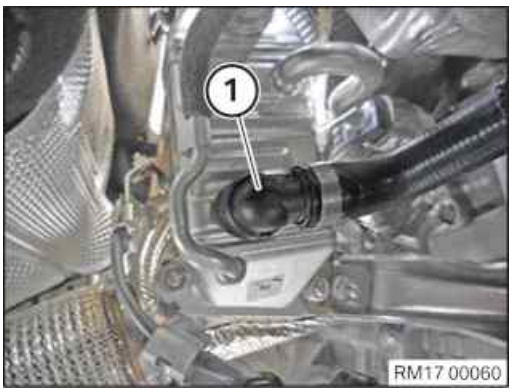

- Unlock and pull off the coolant line (1) from the low pressure exhaust-gas recirculation cooler on the diesel particulate filter.
- Catch and dispose of escaping coolant.

16 – Partially detach the clean air pipe

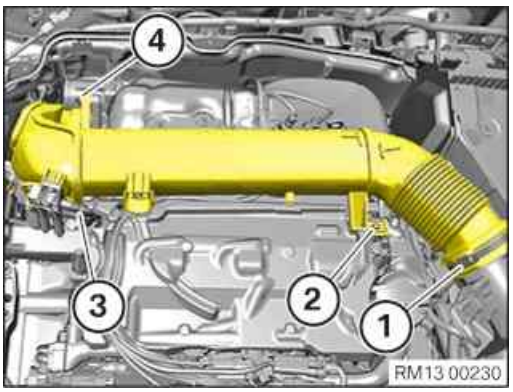

- Release the screw clamp (1).
- Loosen screw (2).
- Unlock and loosen connector (3).
- Loosen screw (4).

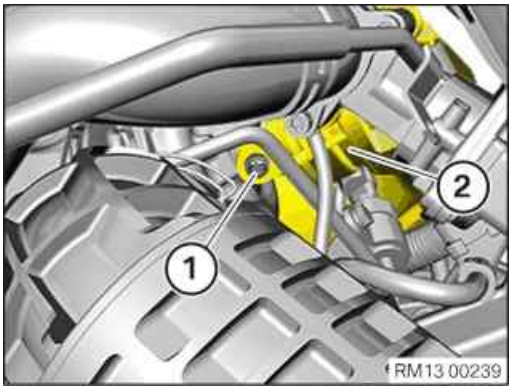

- Unscrew the screw (1) from the clean air pipe (2).

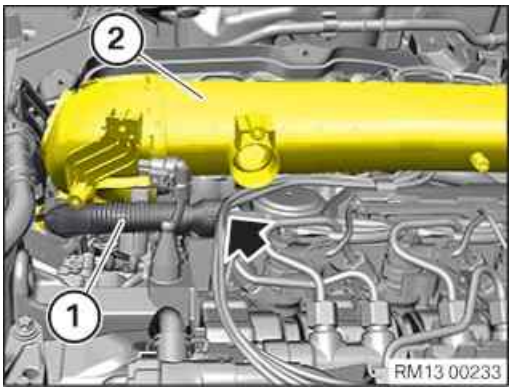

- Detach ventilation line (1) from clean air pipe (2) and set it aside.
- Detach ventilation line (1) from cylinder head cover (arrow).
- Remove the ventilation line (1).

- Thread out the clean air pipe (1) and set it aside as shown.

17 – Releasing the wiring harness section for the intake plenum

Overview: Wiring harness section for the engine

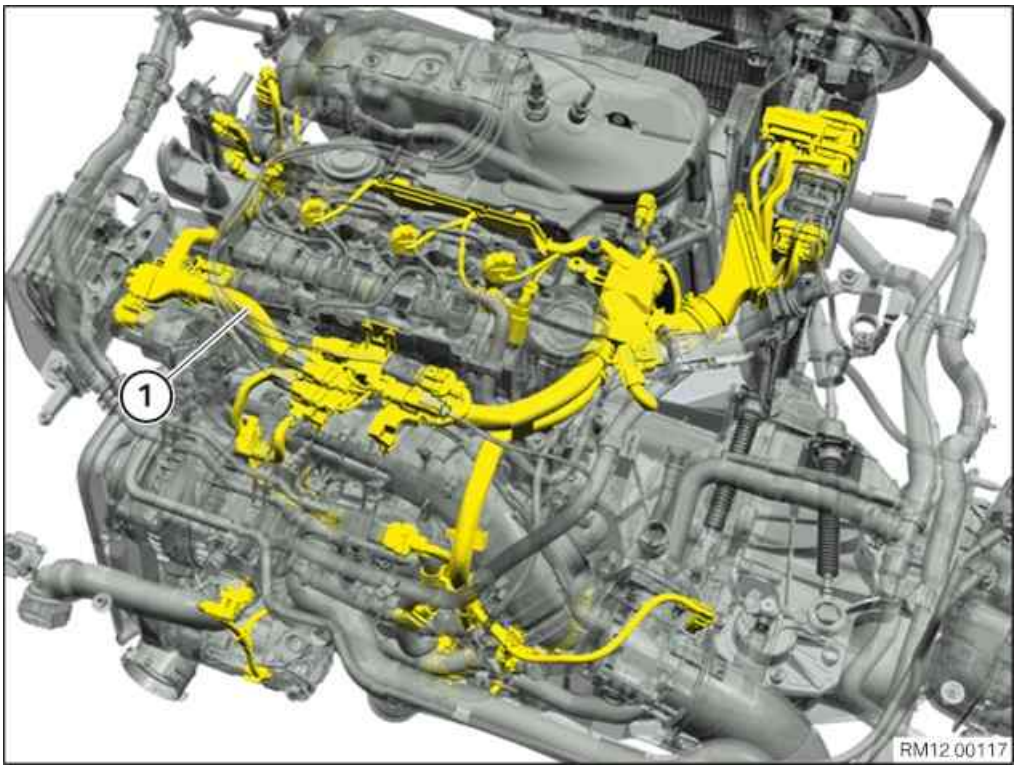

1 Wiring harness section for the engine

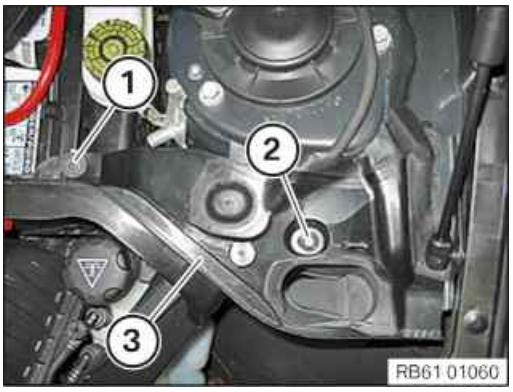

- Release the screw (1) and the expanding rivet (2).
- Remove the fixture for the gasket (3).

- Loosen screw (1).
- Place cover (2) of the positive battery connection point to one side.

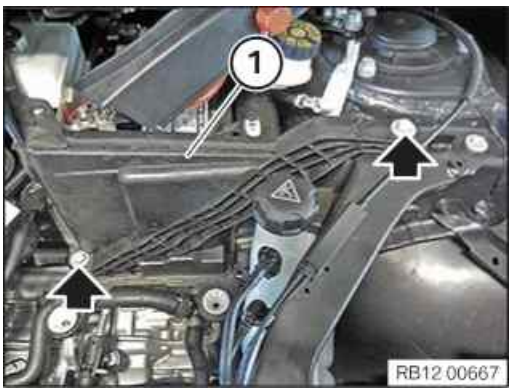

- Remove screws (arrows).
- Guide out tension strut (1) and remove.

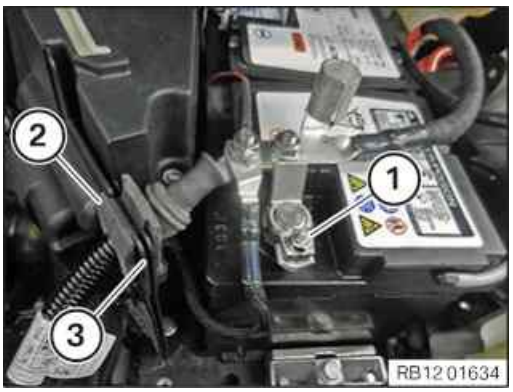

- Undo positive battery terminal (1).
- Feed out positive battery terminal (1) and set aside.
- Guide the positive battery cable (2) out of the holder (3) and lay to one side.

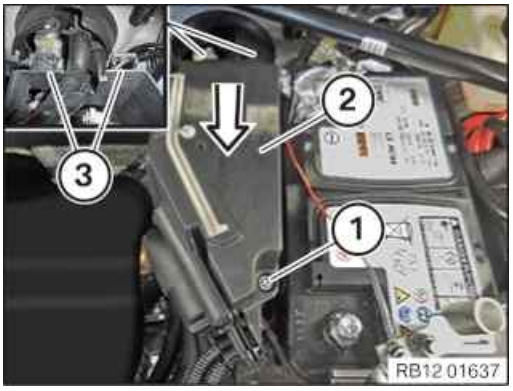

- Loosen screw (1).
- Unlock cover (2) and feed out and remove from the guides (3) in the direction of arrow.

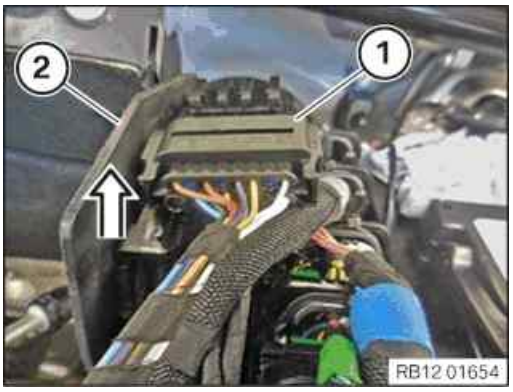

- Guide the connector (1)out of the electronics box (2) in the direction of arrow and remove it.
- Unlock and loosen connector (1).

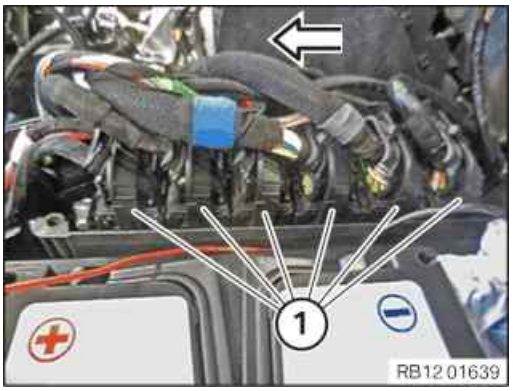

- Unlock and remove the connector (1) in the direction of the arrow.
- Feed out connector (1) and place to one side.

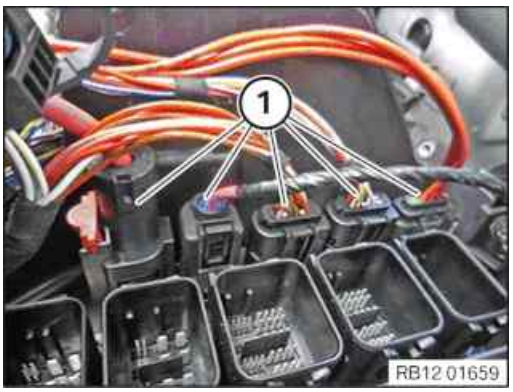

- Unlock and loosen connector (1).

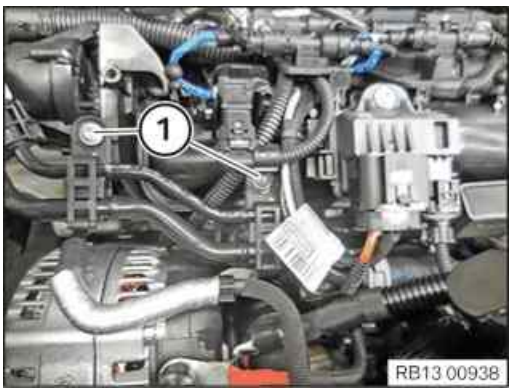

- Loosen screws (1).

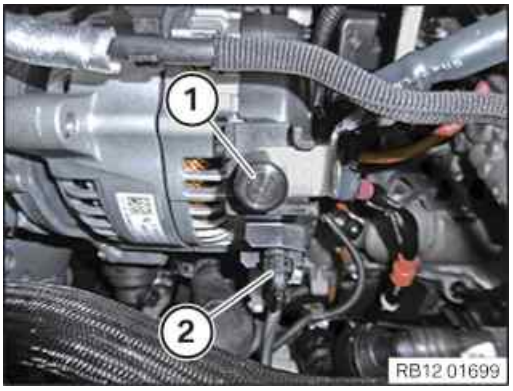

- Release the positive battery cable (1) on the alternator and place to one side.
- Unlock connector (2) and pull off.

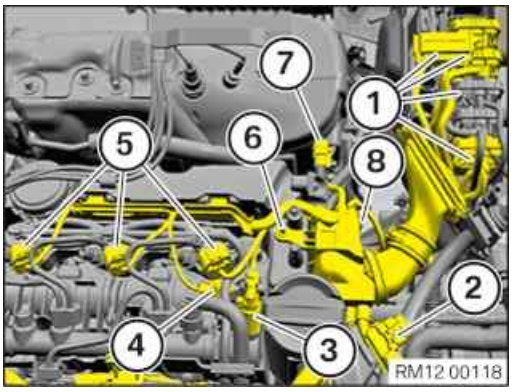

- Disconnect all connectors (1) from the DME control unit and remove the integrated supply module (PDM).
- Unlock connector (2) and pull off from hot film air mass meter.
- Unlock connector (3) and pull off from fuel pressure regulator.
- Unlock connector (4) and disconnect from camshaft sensor.
- Unlock the connector (5) and pull off from the injectors.
- Loosen screw (6).
- Unlock connector (7) and disconnect from differential pressure sensor.

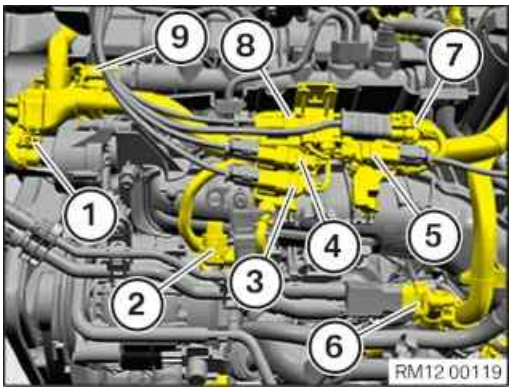

- Unlock connector (1) and pull it off the servomotor for the swirl flap.
- Unlock the connector (2) and pull it off the charging pressure sensor.
- Unlock connector (3) and pull off from exhaust temperature sensor downstream from the diesel particulate filter.
- Unlock connector (4) and pull off from exhaust gas pressure sensor for the low pressure exhaust-gas recirculation cooler.
- Unlock connector (5) and pull off from exhaust gas pressure sensor for the exhaust-gas recirculation cooler.
- Unlock connector (6) and pull off from the fuel pressure and temperature sensor.
- Unlock and disconnect the connector (7) from the front oxygen sensor.
- Unlock connector (8) and pull off from exhaust gas pressure sensor upstream from the diesel particulate filter.

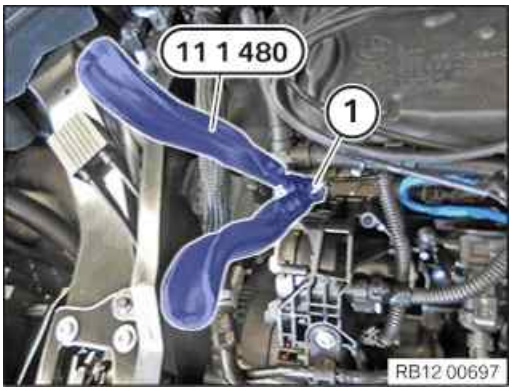

- Unlock connector (1) at all glow elements using special tool **0 490 796 (11 1 480)** and release.
- Guide the wiring harness out of the guide on the cylinder head cover and place to one side.

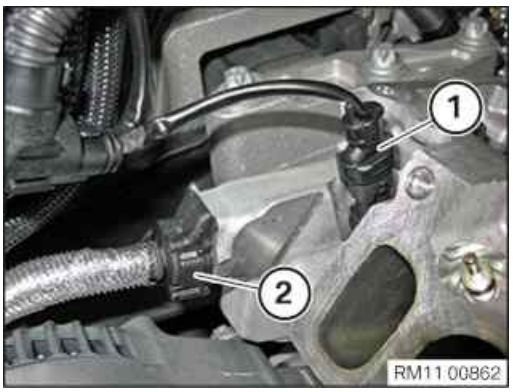

- Unlock and loosen connector (1).
- Unlock the clamp of the coolant line (2) and release the coolant line.

18 – Removing the cable clips from the intake plenum

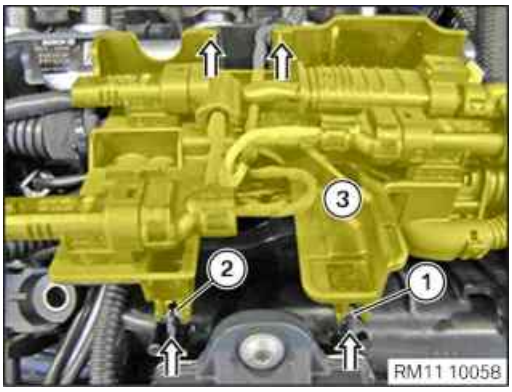

- Release the clips (1) and (2).
- Feed out the cable clip (3) in the direction of the arrow and set it aside.

19 – Removing the intake plenum

TECHNICAL INFORMATION

Collect and dispose of emerging fluids. Observe country-specific waste disposal regulations.

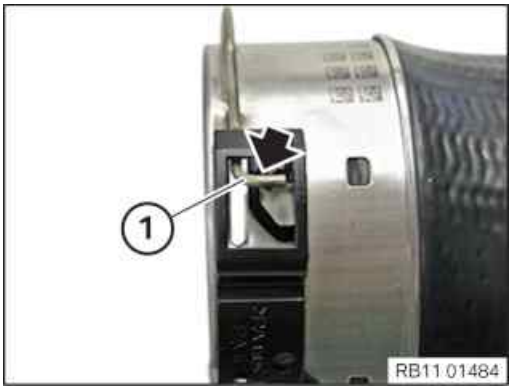

- Unlock the lock (1).

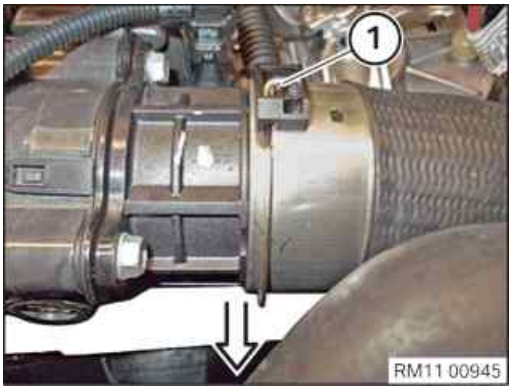

- Ensure that the lock (1) is unlocked.
- Pull the charge air line off the throttle valve.

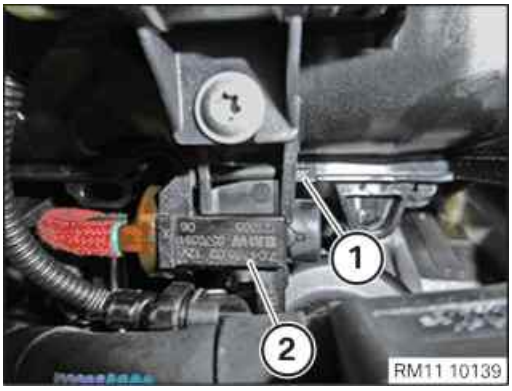

- Unlock the lock (1) upward.
- Guide out the electric changeover valve (2) to the left and set it aside.

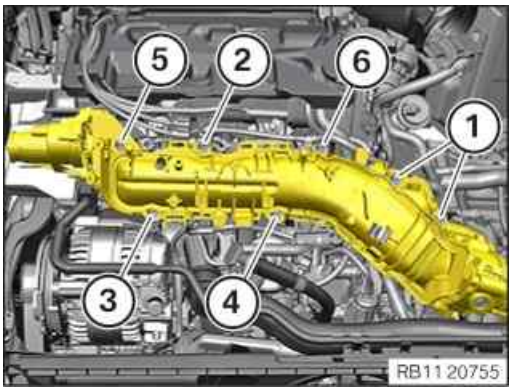

- Loosen the screws (1) on the exhaust-gas recirculation cooler.
- Release the screws (2) to (6).
- Guide the intake plenum out forwards and remove it.

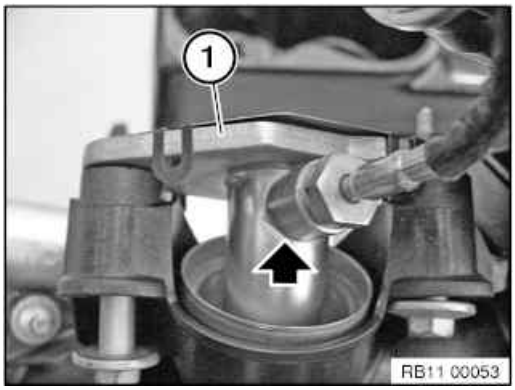

- Remove the exhaust-gas recirculation pipe (1) in direction of arrow.

20 – Remove the high pressure line between the high pressure pump and the rail

WARNING

Hot surfaces.

Risk of burning!

- Perform all work only on components that have cooled down.

WARNING

Hot fluids.

Risk of scalding!

- Conduct all work in the vehicle wearing appropriate personal protective equipment only.

WARNING

Working on fuel system.

Risk of fire! Danger of explosion!

- When working on the fuel system, make sure that the workbay is sufficiently ventilated, e.g. using extraction unit.
- Tightly seal off open lines and connections; collect any escaping fuel directly at the point of exit.
- No fire, sparks, open flames or smoking.

CAUTION

On releasing high pressure line, fuel may emerge at high speed.

Danger of injury!

- Wear suitable personal protective equipment.
- Allow the cooling system to cool down to a temperature below 40°C before starting installation work.
- Note warnings on cylinder head cover.

TECHNICAL INFORMATION

Collect and dispose of emerging fluids. Observe country-specific waste disposal regulations.

TECHNICAL INFORMATION

Reset special tool in early to avoid bending pressure lines.

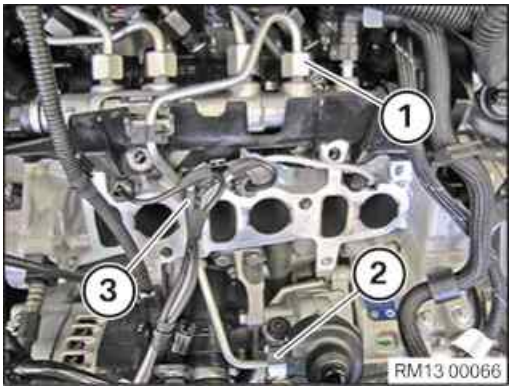

- Loosen union nut (1) with special tool **0 495 910 (37 1 152)**.
- Reset the special tool **0 495 910 (37 1 152)** in good time in order to avoid bending high pressure line (3).
- Loosen union nut (2) with special tool **0 495 910 (37 1 152)**.
- Reset the special tool **0 495 910 (37 1 152)** in good time in order to avoid bending high pressure line (3).
- Catch and dispose of escaping fuel.
- Feed the high pressure line (3) out and remove.
- Seal open connections using special tool **2 413 106**.

21 – Remove connecting branch on the engine block

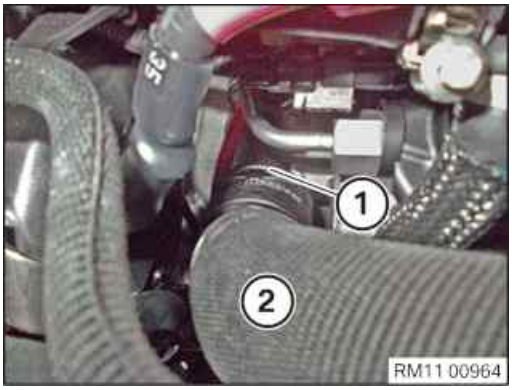

TECHNICAL INFORMATION

Collect and dispose of emerging fluids. Observe country-specific waste disposal regulations.

- Unlock the lock (1) upward.
- Pull off the coolant hose (2).
- Catch and dispose of escaping coolant.

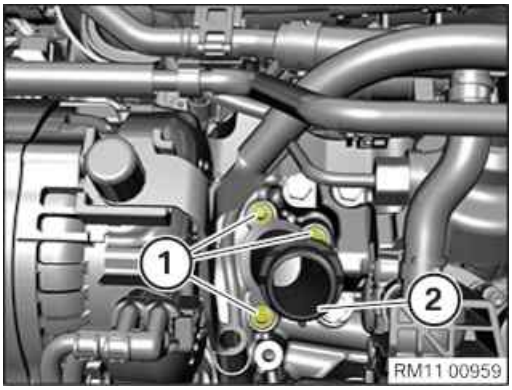

- Loosen screws (1).
- Guide out and remove the connecting branch (2).

22 – Remove front right wheel

TECHNICAL INFORMATION

The wheel can be balanced electronically at the vehicle. In this case, it is important not to change the position of the wheel relative to the wheel hub.

TECHNICAL INFORMATION

Strictly observe the specified procedure to prevent clamping errors and imbalance.

- Turn the wheel so that the valve (arrow) points down.
- If several wheels are removed simultaneously: Use a piece of chalk to mark on each tyre the axle and side on which the corresponding wheel is fitted.
- Mark the alignment of the wheel with respect to the wheel hub.
- Mark the position of the lockable wheel bolt (arrow).
- Unscrew the wheel bolts and remove the wheel.

  Use the matching adapter from tool set (wheel bolt adapter set) to loosen and tighten down the wheel bolt with security code.

23 – Removing the front right wheel arch cover

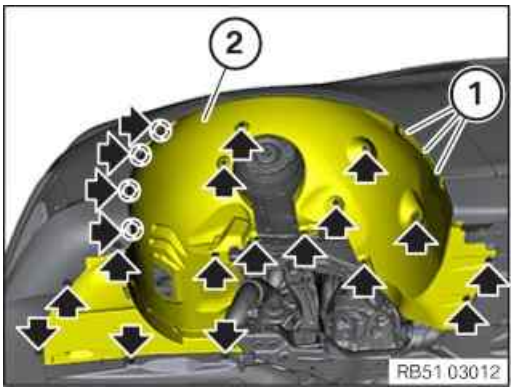

- Loosen the expanding rivet (1).
- Unscrew all bolts and nuts (arrows).
- Feed the wheel arch cover (2) out at the front right and remove it.

24 – Remove right charge-air line

- Release charge air duct screws (1) on oil sump.

- Detach charge air duct screw connection (1) on crankcase.

- Unfasten lock (1) on exhaust turbocharger and charge air cooler.
- Let the lock (1) engage at the holder (arrow).

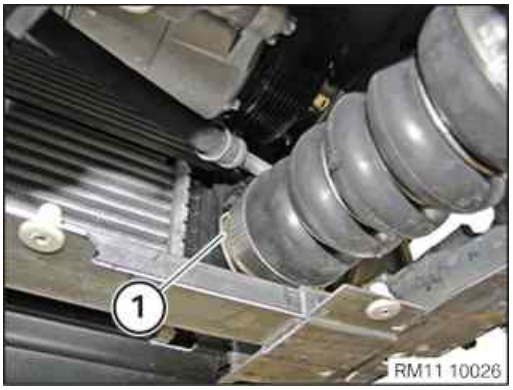

- Ensure that lock (1) on charge air cooler is unlocked on both sides.
- Detach charge air duct from charge air cooler.

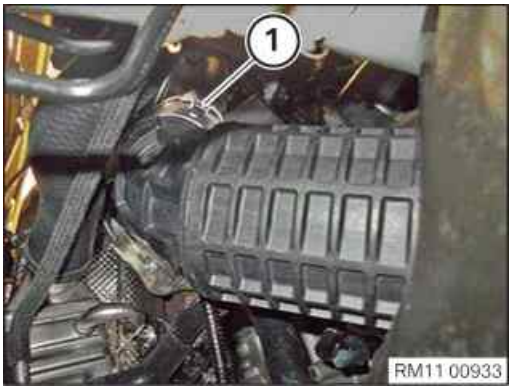

- Ensure that locks (1) from exhaust turbocharger are both unlocked.
- Pull charge air line from exhaust turbocharger.

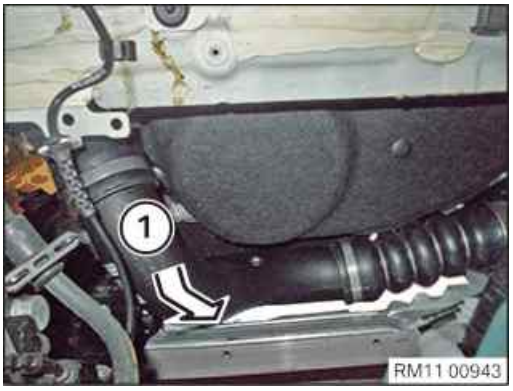

- Feed out and remove charge air line between side member and front axle support through the wheel arch downwards and to the side.

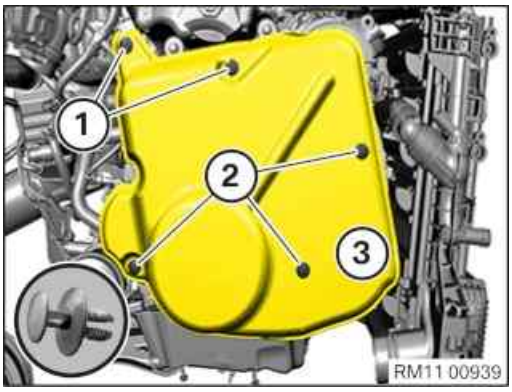

- Release the expanding rivets (1) from the top.
- Release the expanding rivets (2) from the bottom.
- Feed out and remove acoustic cover (3) downwards.

MAIN WORK

26 – Remove high pressure pump

WARNING

Working on fuel system.

Risk of fire! Danger of explosion!

- When working on the fuel system, make sure that the workbay is sufficiently ventilated, e.g. using extraction unit.
- Tightly seal off open lines and connections; collect any escaping fuel directly at the point of exit.
- No fire, sparks, open flames or smoking.

CAUTION

On releasing high pressure line, fuel may emerge at high speed.

Danger of injury!

- Wear suitable personal protective equipment.
- Allow the cooling system to cool down to a temperature below 40°C before starting installation work.
- Note warnings on cylinder head cover.

RISK OF DAMAGE

Contaminant or foreign body.

Contamination can result in malfunctions, operating failure or leaks.

- Adhere to the utmost cleanliness.
- Protect components from contamination e.g. by covering.
- Close off line connections with seal plugs.

- Remove protective cap (1) from oil sump.

RISK OF DAMAGE

Damage to the engine.

The engine may be damaged if it is manually rotated in the wrong direction.

- Always rotate the engine in the correct direction of rotation by hand: a) Clockwise, facing the vibration damper or b) Counter-clockwise, facing the chain drive. (b) only applies when the rear timing chain is installed.

- Crank the engine on the first cylinder to TDC firing position using special tool **0 493 380 (11 6 480)**.

  Do **not** crank the engine in reverse.

- Push special tool **2 288 380** all the way into the oil sump until the engine is blocked.
- If disconnecting is not possible, slowly rotate engine in direction of rotation until the special tool **2 288 380** engages in the flywheel.
- Check whether the engine is blocked free of play.

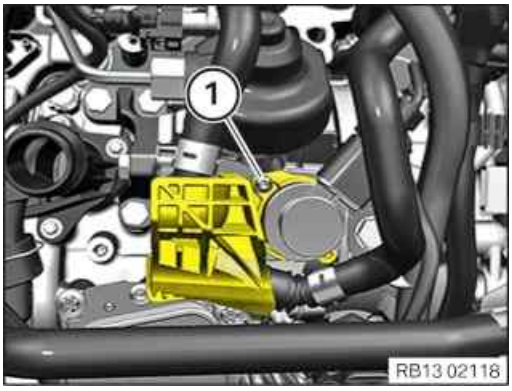

- Loosen screw (1).

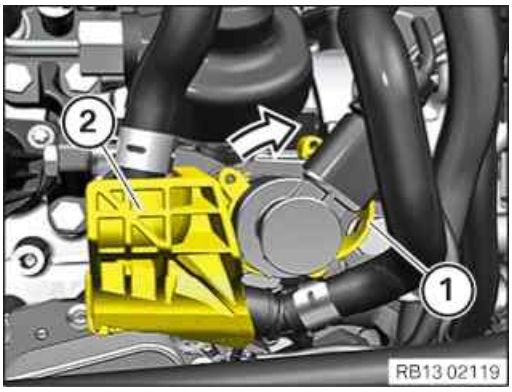

- Open holder (1) in direction of arrow.
- Guide out and remove the cover (2).

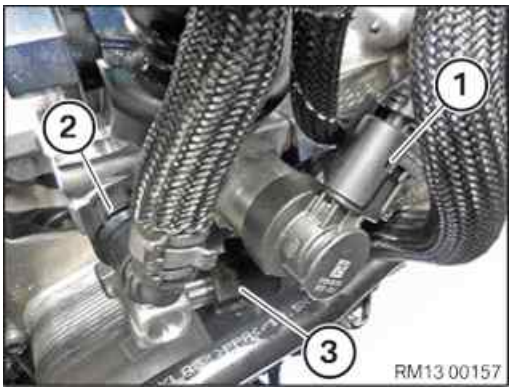

- Unlock and loosen connector (1).
- Unlock and release fuel delivery line (2).
- Unlock and release fuel return line (3).
- Catch and dispose of escaping fuel.
- Seal off the openings on the high pressure pump with the special tool **2 413 106**.

TECHNICAL INFORMATION

It is imperative that the special tool 2 448 914 remains installed in the camshaft sprocket after the insertion until all repair work has been completed.

- It is **imperative** that the set of special tools is used to remove the high pressure pump.

  Removal of the high pressure pump **without** the set of special tools is **not** permitted.

- Release the sealing cap (1) on the timing case cover.

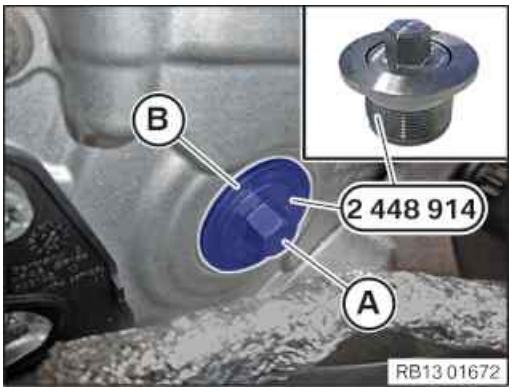

- Screw in special tools (A) and (B) from the set of special tools to position the camshaft sprocket of the high pressure pump.
- Remove special tool (A) of the set of special tools after screwing in special tool (B).

  Special tool (B) of the set of special tools remains in the timing case **until the end** of the repairs.

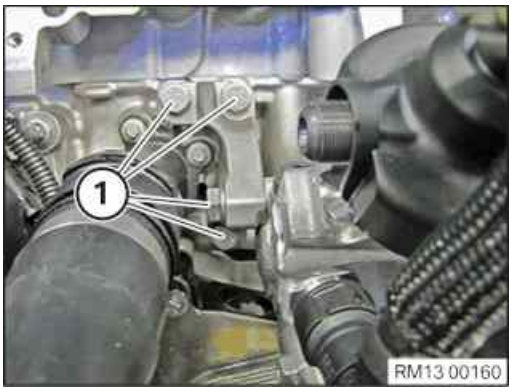

- Loosen screws (1).
- Feed out high pressure pump support and remove.

- Loosen top screw (1).

- Loosen bottom screw (1).

- Undo the bolt (1) on the camshaft sprocket of the high pressure pump.

  The bolt is (1) supported by the special tool (B) from the set of special tools until the high pressure pump is pressed out.
- Feed out high pressure pump and remove.

27 – Install high pressure pump

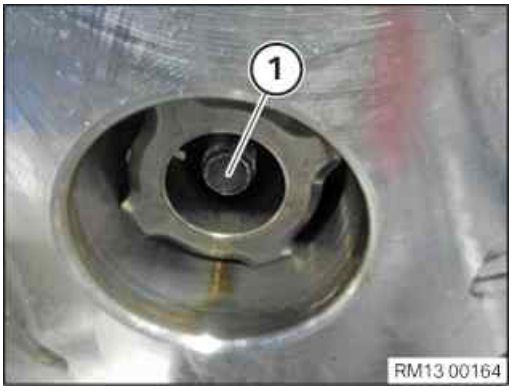

- If necessary, slightly pivot the high pressure pump to position the groove on the high pressure pump shaft correctly in the camshaft sprocket with the central bolt (1).
- **Align** the high pressure pump with crankcase correctly again.

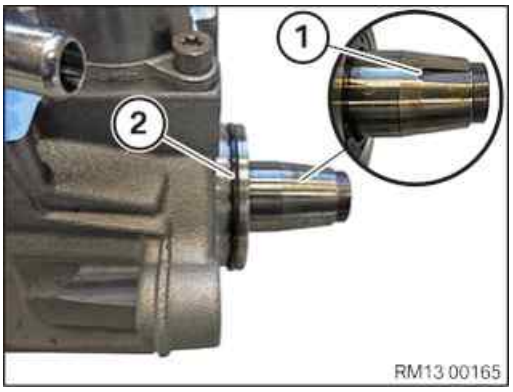

- When installing a new high pressure pump (2): If necessary, rotate the high pressure pump shaft to position the groove (1) correctly.

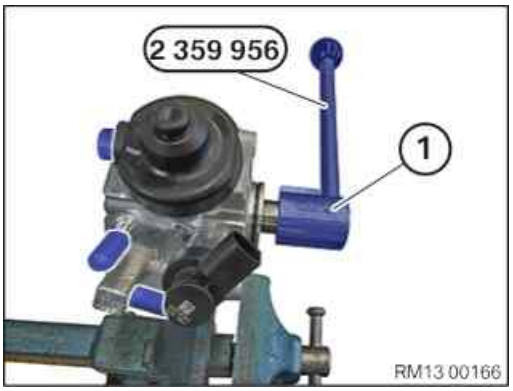

- Rotate the high pressure pump shaft clockwise with the special tool (1) **2 359 956** until the groove on the high pressure pump shaft is in a position where it can be positioned correctly in the camshaft sprocket with the central bolt.

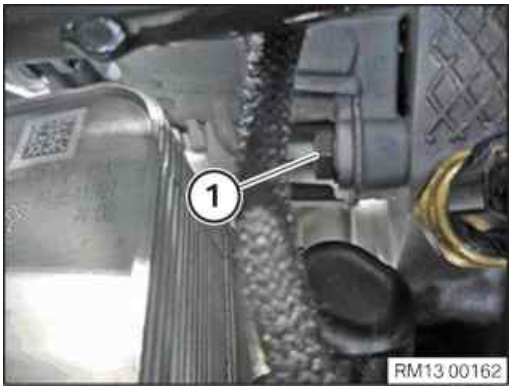

- Insert the high pressure pump in the camshaft sprocket and position the central bolt.
- Hand-tighten the lower bolt (1).

- Hand-tighten the upper bolt (1).

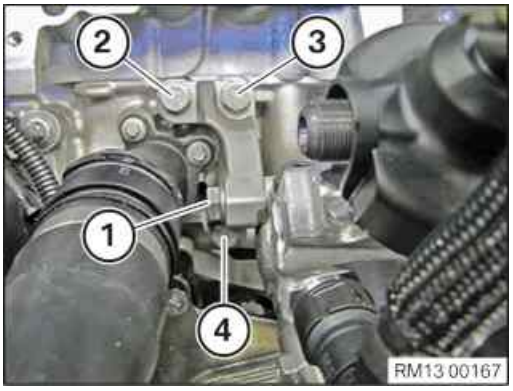

- Insert and install the high pressure pump holder.
- Hand-tighten the bolts in the sequence (1), (2), (3), (4).
- Tighten the bolts in the sequence (2), (3), (4), (1).

Holder of high pressure pump to crankcase

M8x33	Observe tightening sequence.	Tightening torque	19 Nm

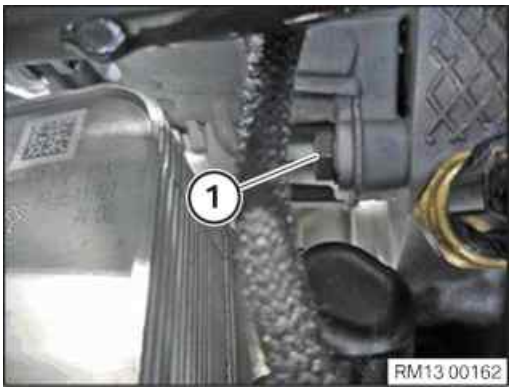

- Tighten the screws (1).

High pressure pump to crankcase

M8x33		Tightening torque	19 Nm

- Tighten down screw (1).

High pressure pump to crankcase

M8x33		Tightening torque	19 Nm

- Tighten down screw (1).

Central bolt of high pressure pump to camshaft sprocket

M12x1		Tightening torque	65 Nm

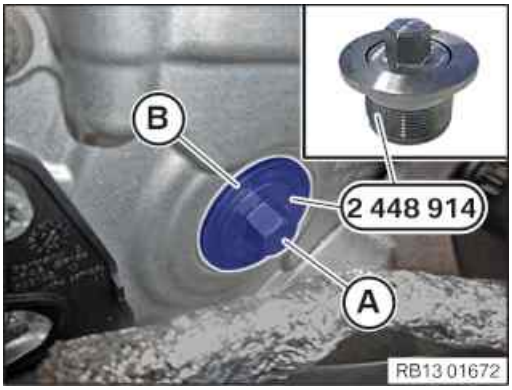

- Insert special tool (A) into special tool (B).
- Unscrew and remove the special tool .

- Renew the sealing cap (1) with the O-ring.

  Parts: Sealing cap with O-ring
- Install and tighten the sealing cap (1) on the timing case.

Screw plug to end cover

M34x1.5		Tightening torque	20 Nm

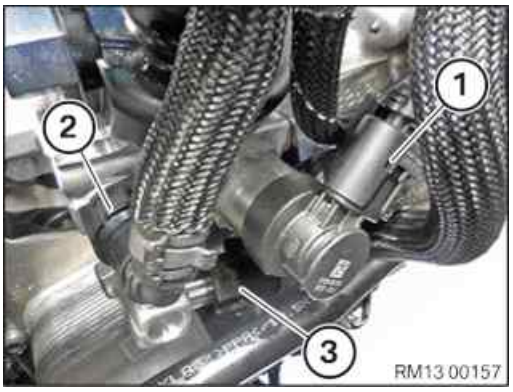

- Connect and lock fuel return line (3).
- Connect and lock fuel delivery line (2).
- Make sure that the fuel return line (2) and the fuel feed line (1) engage audibly.
- Connect and lock the connector (1).

  The connector (1) must engage audibly.

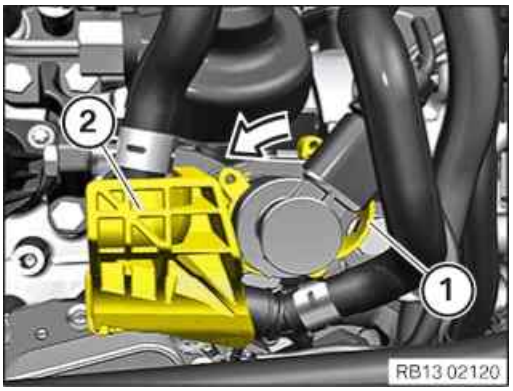

- Guide in and install cover (2).
- Close the bracket (1) in direction of arrow.

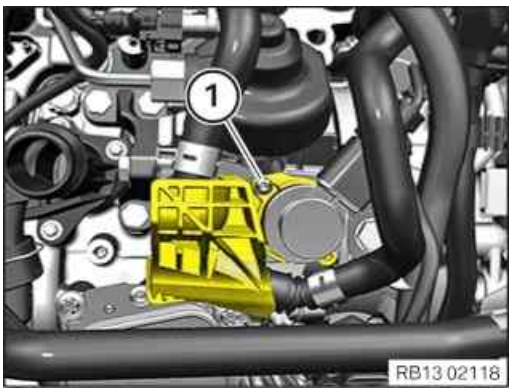

- Tighten down screw (1).

High pressure pump cover

Screw		Tightening torque	1,5 Nm

- Remove special tool **2 288 380**.

- Install the protective cap (1).

POSTPROCESSES

28 – Install the acoustic cover for the engine at the front

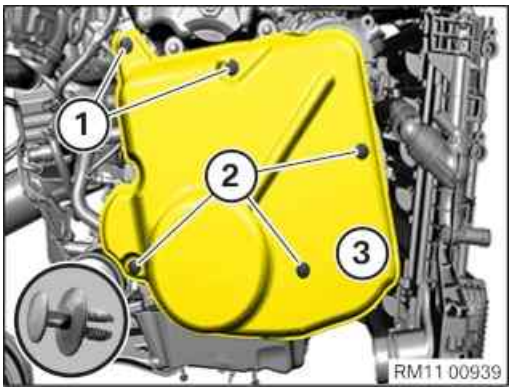

- Thread in and position the acoustic cover (3).
- Secure the acoustic cover (3) with the expanding rivets (2) from the bottom.
- Secure the acoustic cover (3) with the expanding rivets (1) from the top.

29 – Install right charge air duct

RISK OF DAMAGE

Damage to the exhaust turbocharger.

A leak at the pressure pipe can damage the exhaust turbocharger.

- Replace the gaskets and pressure pipe if necessary.

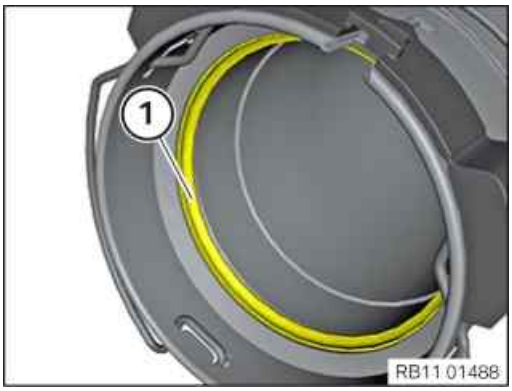

- Check the sealing ring (1) for damage and renew the sealing ring (1) as needed.

  Parts: Gasket

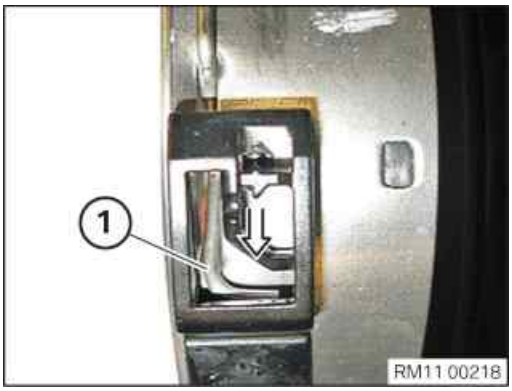

- Let the lock (1) engage at the holder (arrow).

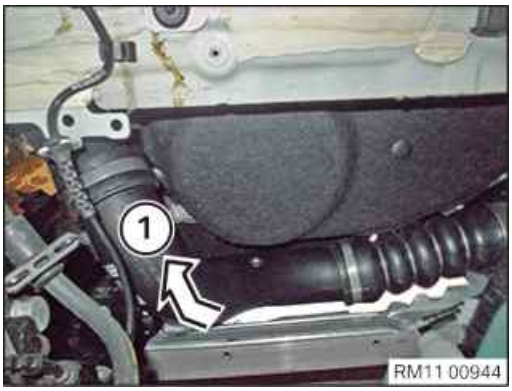

- Feed in charge air duct (1) to the side and upwards through the wheel arch between the side member and front axle support and install.

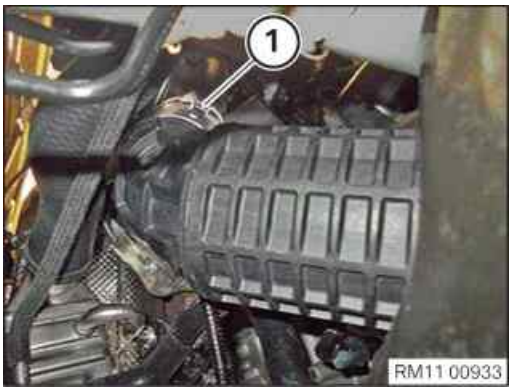

- Attach charge air duct on the exhaust turbocharger until locks (1) engage on both side.

  The lock (1) must audibly engage.

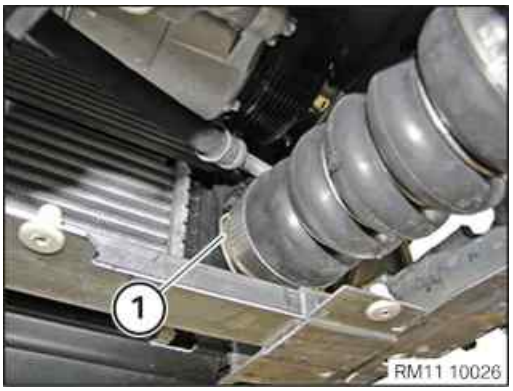

- Attach the pressure pipe to the charge air cooler until the lock (1) engages on both sides.

  The lock (1) must audibly engage.

- Tighten screw (1) of the charge air duct on the crankcase.

Charge air line to crankcase

M6x25		Tightening torque	5 Nm

- Tighten charge air duct screws (1) on oil sump.

Charge air duct to oil sump

M6		Tightening torque	8 Nm

30 – Installing the front right wheel arch cover

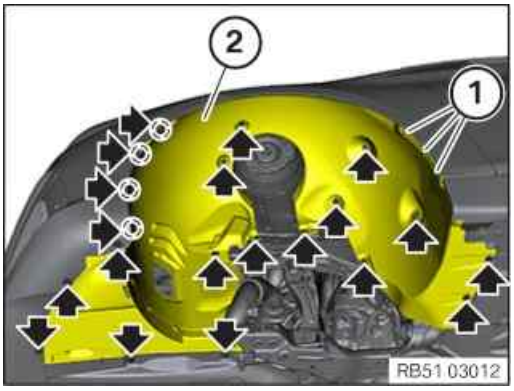

- Guide in and install the front right wheel arch cover (2).
- Tighten all bolts and nuts (arrows).

Wheel arch cover

Screw		3 Nm
Plastic nut		2,6 Nm

- Secure expanding rivet (1).

31 – Installing the front right wheel

▸ **Clean the contact surfaces between the brake disc and the wheel rim**

TECHNICAL INFORMATION

The contact surface between the brake disc and the wheel rim must be clean and free from oil and grease. There is otherwise a risk of the wheel becoming loose at a later time.

- Remove dirt, grease residues and corrosion from the contact surface with a drill and the special tool **2 344 011**.

  Do not operate special tool **2 344 011** with an impact screwdriver.
- Degrease the contact surfaces with the universal cleaner (see BMW Group Parts).
- In the event of grease residue around the wheel bolt holes: remove and clean the brake disc.

- Remove dirt, grease residues and corrosion from the contact surface with a drill and the special tool **2 344 011**.

  Do not operate special tool **2 344 011** with an impact screwdriver.
- Degrease the contact surfaces with the universal cleaner (see BMW Group Parts).

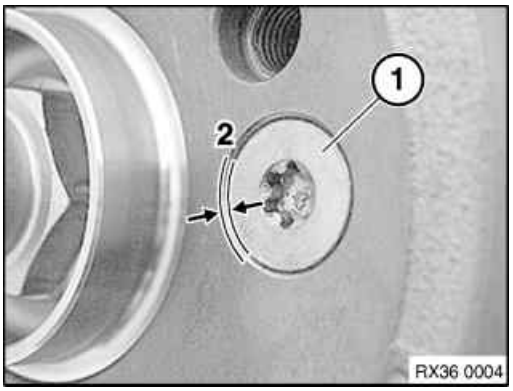

- Check the mounting bolt for the brake disc (1) for secure fit.

  The mounting bolt for the brake disc (1) must not protrude under any circumstances on the contact surface (2) between the brake disc and the wheel rim.

Brake disc to front wheel hub

M8	Renew screw.		16 Nm

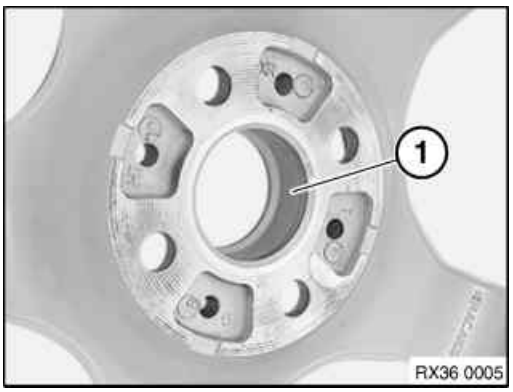

- Lightly grease the wheel centring (1) in the wheel rim; refer to additional information for grease for the wheel centring.

TECHNICAL INFORMATION

Never use impact screwdrivers or electric screwdrivers to screw in and tighten the wheel bolts.

The wheel rim must rest uniformly against the brake disc.

In the case of non-original BMW wheel bolts/wheel rims, it may be necessary to retighten the wheel bolts on account of setting properties (refer to the documentation from the manufacturer).

Do not apply oil to new wheel bolts.

- Renew corroded wheel bolts.

  Parts: Wheel bolts

- Clean the wheel bolts and check the threads for damage. Renew the wheel bolts as needed.
- Mount wheel bolts and tighten.

Wheel bolts

M 14/AF 17	Screw in wheel bolts and evenly tighten crosswise by hand in order to centre the wheel rim.	Tightening torque	140 Nm
	Tighten wheel bolts to the prescribed tightening torque with a calibrated torque wrench in a crosswise sequence.	Check	140 Nm
	Check all the wheel bolts in the same order or retighten to the prescribed tightening torque again.		

32 – Install connecting branch on the engine block

TECHNICAL INFORMATION

The sealing surfaces must be free from oils, grease and cleaning agents.

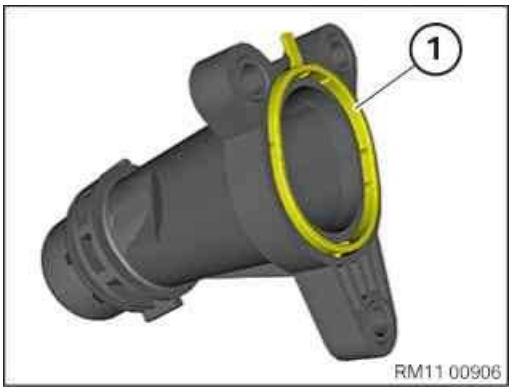

- Renew gasket (1).

  Parts: Gasket

- Clean the sealing surface (1) on the engine block with the special tool **0 495 102 (11 4 470)**.

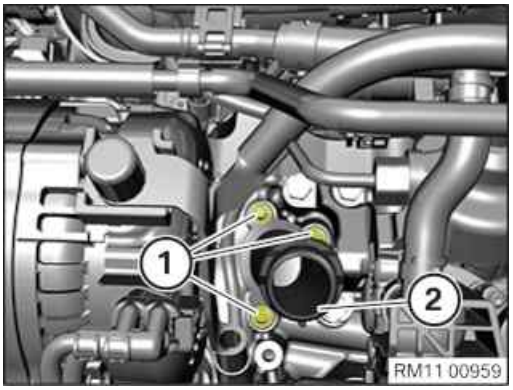

- Insert and position the connecting branch (2).
- Tighten the screws (1).

Connecting branch to engine block

M6x25		Tightening torque	8 Nm

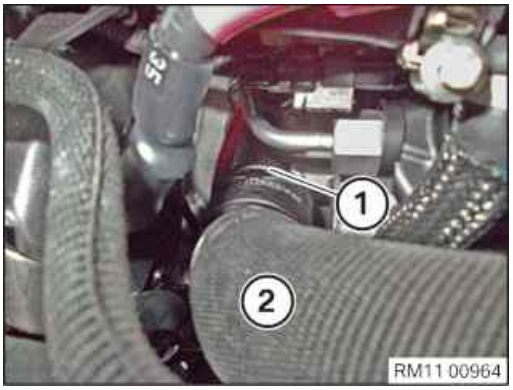

- Connect and lock coolant hose (2).
- Ensure that the lock (1)engages audibly.

33 – Installing high pressure line between rail and high pressure pump

WARNING

Working on fuel system.

Risk of fire! Danger of explosion!

- When working on the fuel system, make sure that the workbay is sufficiently ventilated, e.g. using extraction unit.
- Tightly seal off open lines and connections; collect any escaping fuel directly at the point of exit.
- No fire, sparks, open flames or smoking.

TECHNICAL INFORMATION

Reset special tool in early to avoid bending pressure lines.

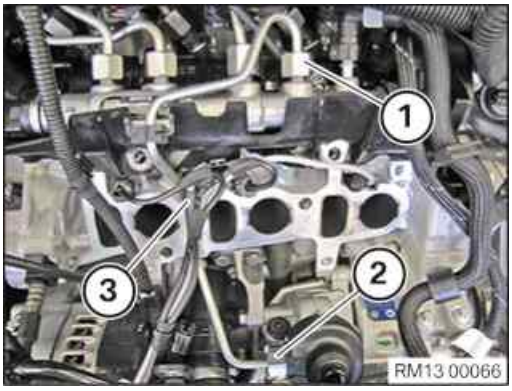

- Remove special tool **2 413 106**.
- Thread in and install the high pressure line (3).
- Make sure that the rubber grommet is positioned correctly in the area of the cylinder head cover.
- Tighten the union nut (1) hand-tight.
- Tighten the union nut (2) hand-tight.
- Ensure that high pressure line (3) is installed without any strain.

TECHNICAL INFORMATION

Renew high pressure lines when the tightening torque exceeds the maximum of 30 Nm.

- Tighten the union nut (1) with the special tool **0 495 910 (37 1 152)**.
- Reset the special tool **0 495 910 (37 1 152)** in good time in order to avoid bending high pressure line (3).

High pressure line between high pressure pump and rail

High-pressure pipe		Tightening torque	28 Nm

- Tighten the union nut (2) with the special tool **0 495 910 (37 1 152)**.
- Reset the special tool **0 495 910 (37 1 152)** in good time in order to avoid bending high pressure line (3).

High pressure line between high pressure pump and rail

High-pressure pipe		Tightening torque	28 Nm

34 – Installing the intake plenum

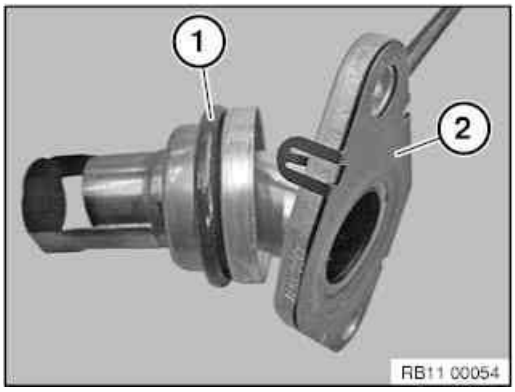

- Renew O-ring (1).

  Parts: O-ring
- Unclip the seal (2).
- Renew gasket.

  Parts: Gasket
- Position seal and clip in.

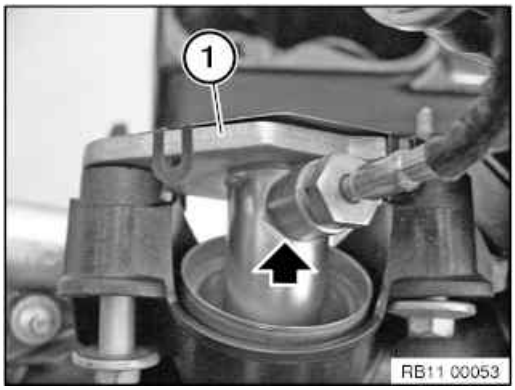

- Install the exhaust-gas recirculation pipe (1) in the intake plenum.

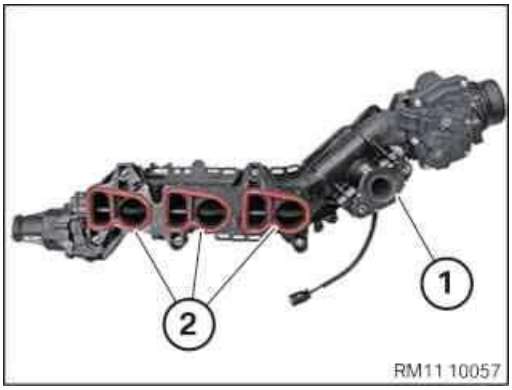

- Renew gaskets (2).

  Parts: Gasket
- Ensure that the seal (1) is firmly mounted on the intake plenum.

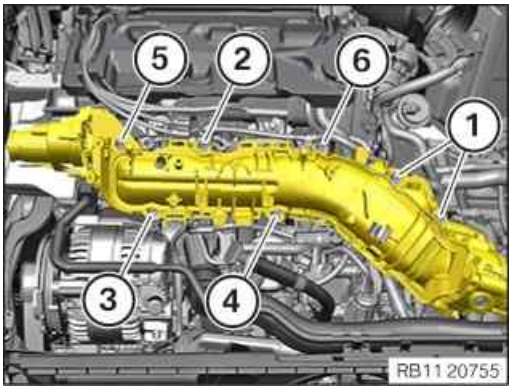

- Guide in and install intake plenum .
- Tighten the screws (1) to (6).

Intake plenum to cylinder head

M6		Tightening torque	11 Nm

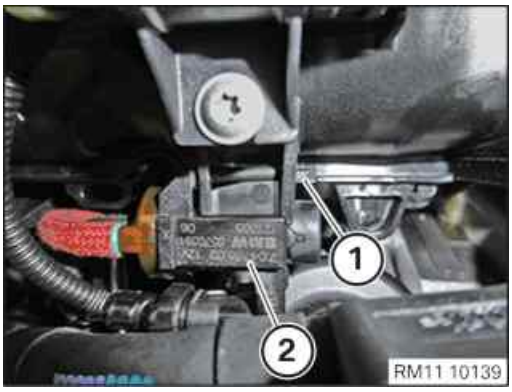

- Feed the electric changeover valve (2) from left to right into the holder on the intake plenum.
- Lock (1) must engage audibly.

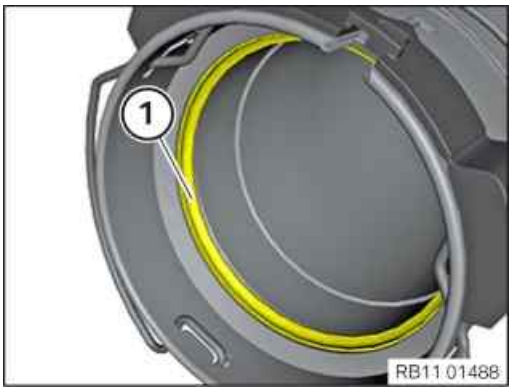

- Check the sealing ring (1) for damage and renew the sealing ring (1) as needed.

  Parts: Sealing ring

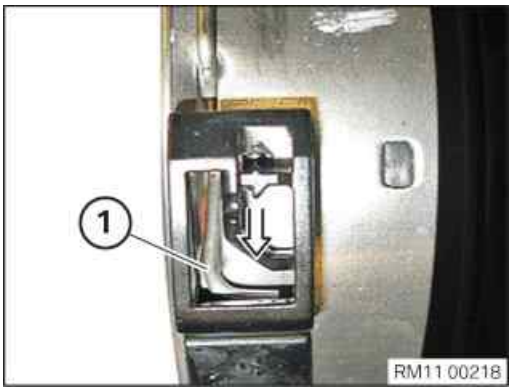

- Engage the lock (1) on the bracket (arrow).

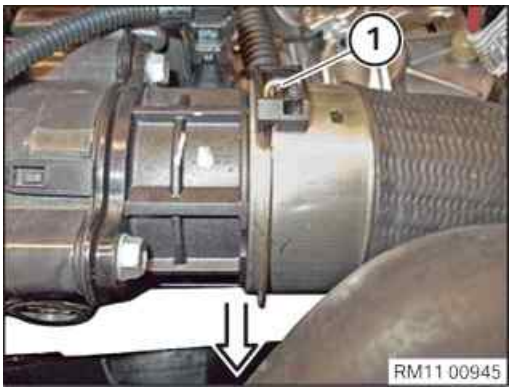

- Connect the charge air line to the throttle valve.

  The lock (1) must audibly engage.
- Check the charge air line for tight fit and freedom of movement.

35 – Installing the cable clip for the intake plenum

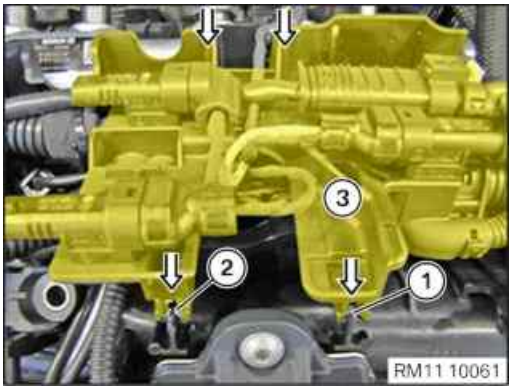

- Feed in and install the cable clip (3) in the direction of arrow.
- Engage clips (1) and (2).

36 – Fastening the wiring harness section for the intake plenum

Overview: Wiring harness section for the engine

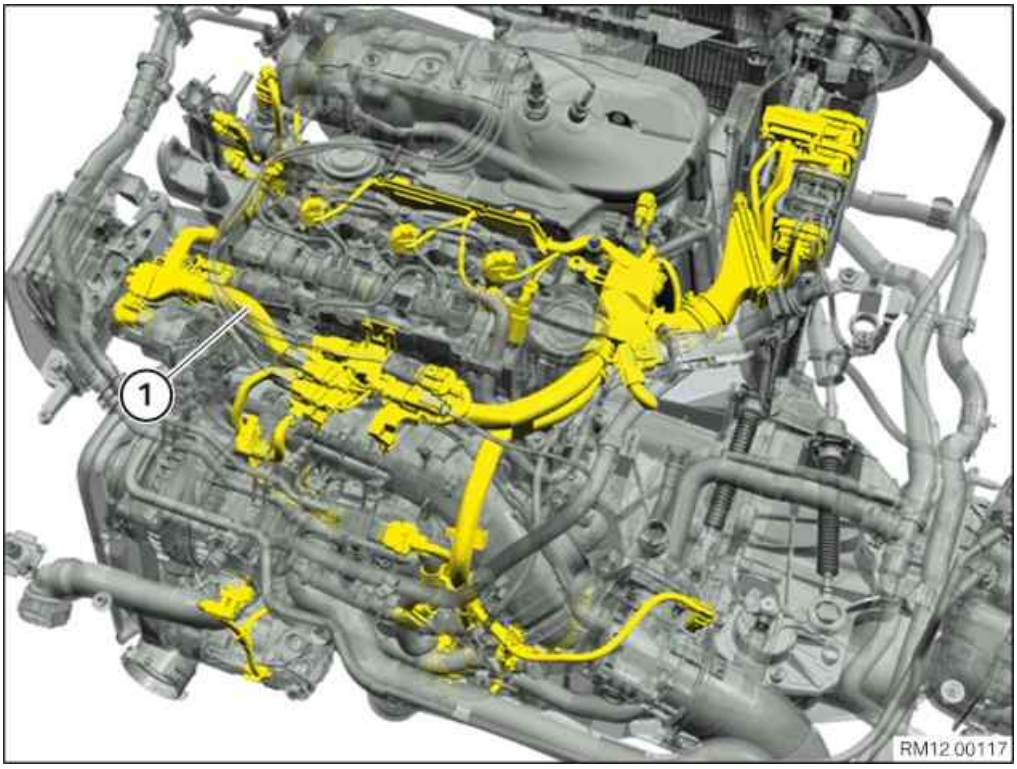

1 Wiring harness section for the engine

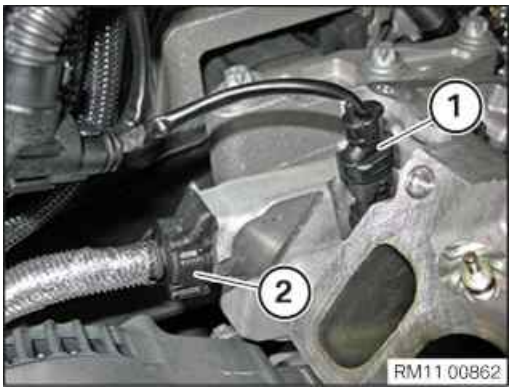

- Connect the coolant line (2) and lock the clamp.
- Connect and lock the connector (1).
- The locks must engage audibly.

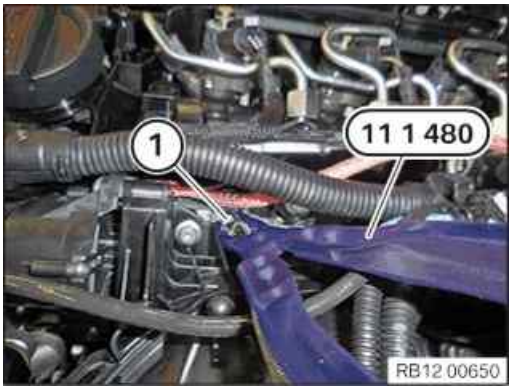

- Connect and lock the connector (1) on the glow elements.

  The connector (1) must lock audibly.
- Guide the wiring harness into the guide on the cylinder head cover.

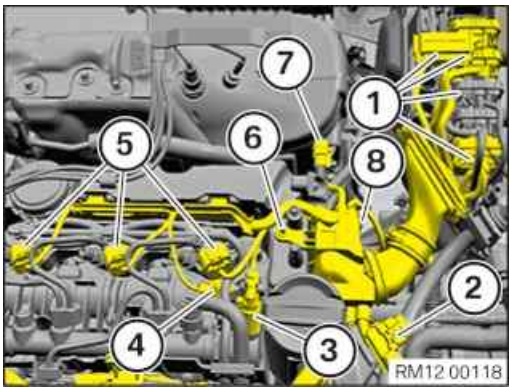

- Route the wiring harness section for the engine and fasten it with the clamps.
- Route all connectors (1) to the DME control unit and remove the integrated supply module (PDM).
- Connect and audibly lock the connector (2) to the hot film air mass meter.
- Attach connector (3) to the fuel pressure regulator and lock it audibly.
- Attach connector (4) to the camshaft sensor and lock it audibly.
- Attach connector (5) to the injectors and lock it audibly.
- Tighten down screw (6).

Wiring harness to cylinder head cover

TS5x20		Tightening torque	3,5 Nm

- Attach connector (7) to the differential pressure sensor and lock it audibly.

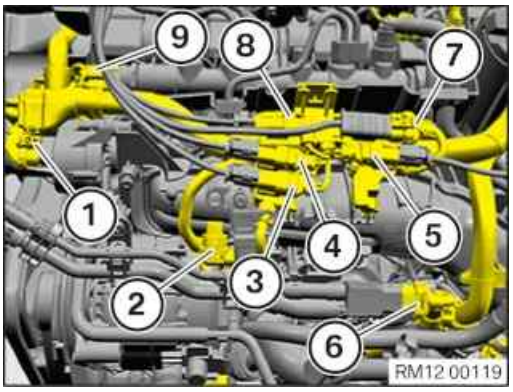

- Attach connector (1) to the servomotor for the swirl flaps and lock it audibly.
- Connect the connector (2) to the charging pressure sensor and lock it audibly.
- Attach connector (3) to the exhaust temperature sensor downstream from the diesel particulate filter and lock it audibly.
- Attach connector (4) to the exhaust temperature sensor for the low pressure exhaust-gas recirculation cooler and lock it audibly.
- Attach connector (5) to the exhaust temperature sensor for the exhaust-gas recirculation cooler and lock it audibly.
- Attach connector (6) to the fuel pressure and temperature sensor and lock it audibly.
- Connect the connector (7) to the front oxygen sensor and lock audibly.
- Attach connector (8) to the exhaust temperature sensor upstream from the diesel particulate filter and lock it audibly.

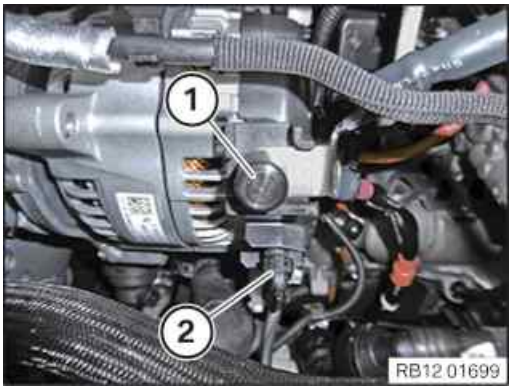

- Connect and lock the connector (2).

  Lock must audibly engage.
- Connect positive battery cable (1) on alternator and tighten.

Positive battery cable to alternator

M8		Tightening torque	19 Nm

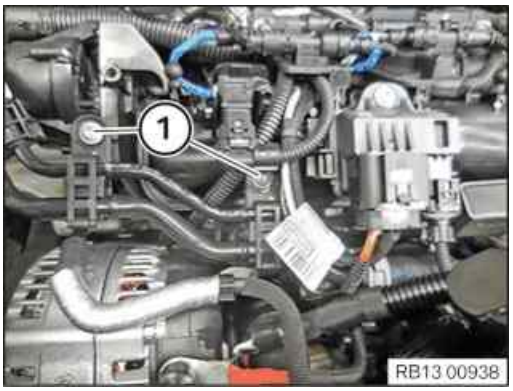

- Position fuel lines.
- Tighten the screws (1).

Fuel line to intake plenum

TS6x20		Tightening torque	5 Nm

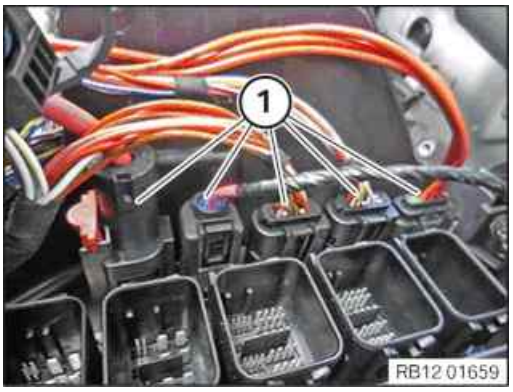

- Connect and lock the connector (1).
- Make sure the connectors (1) engage audibly.

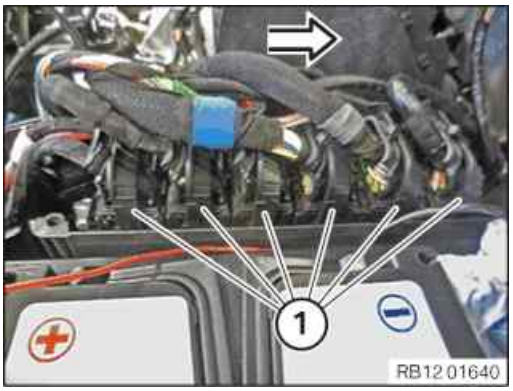

- Connect connector (1) in direction of arrow and lock.
- Make sure the connectors (1) engage audibly.

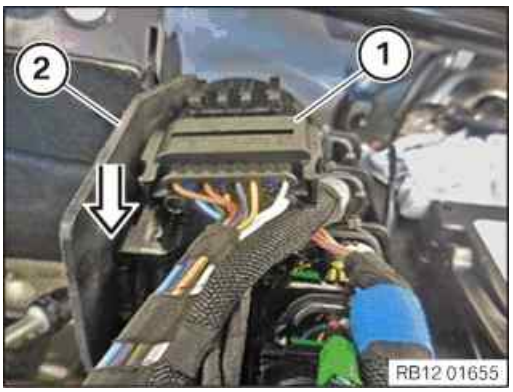

- Connect and lock the connector (1).
- Make sure the connector (1) engages audibly.
- Insert the connector (1) in the direction of arrow at the electronics box (2) and install.

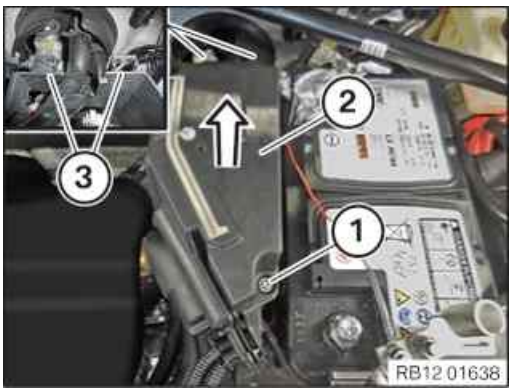

- Insert and install the cover (2) into the guides (3) in the direction of the arrow.
- Make sure the cover audibly engages (2) in the guides (3).
- Tighten down screw (1).

Cover to electronics box

RF5x26.5		Tightening torque	2,5 Nm

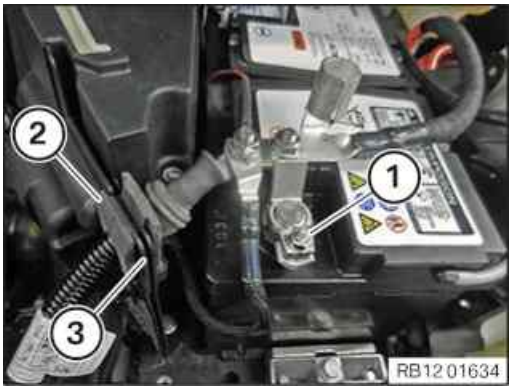

- Thread in positive battery cable (2) on holder (3) and install.
- Feed in and install positive battery terminal (1).
- Tighten positive battery terminal (1).

Positive battery terminal to battery

NutM6		Tightening torque	5 Nm

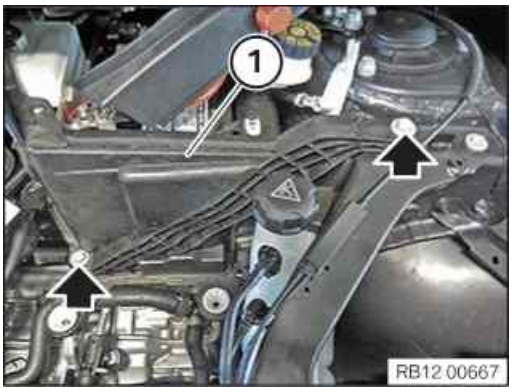

- Feed in and install tension strut (1).
- Tighten screws (arrows).

Tension strut to spring strut dome/battery tray

M8		Tightening torque	19 Nm

- Feed in and install cover (2) at the positive battery connection point.
- Tighten down screw (1).

Positive battery connection point cover to engine compartment partition wall

		Tightening torque	3 Nm

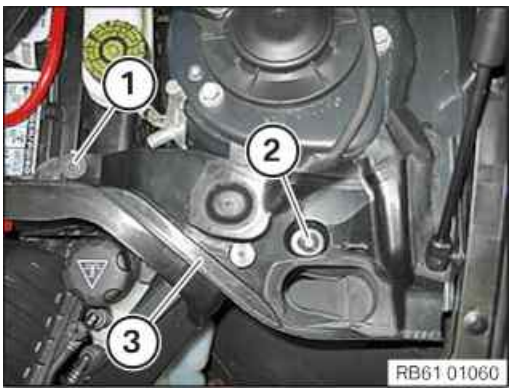

- Position the fixture for the gasket (3) and secure with the expanding rivet (2).
- Tighten down screw (1).

Battery cover

Screw		2,8 Nm

37 – Partially securing clean air pipe

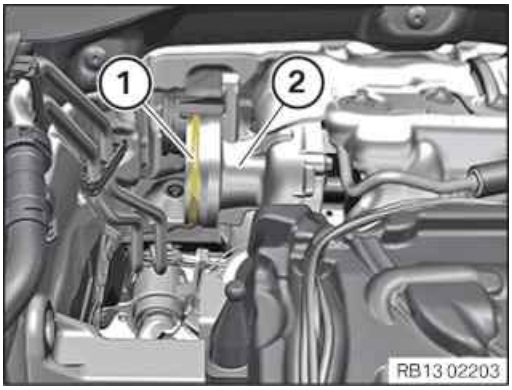

- Check the sealing ring (1) of the exhaust turbocharger (2) for damage and renew it if necessary.

- Feed in clean air pipe (1) and install.

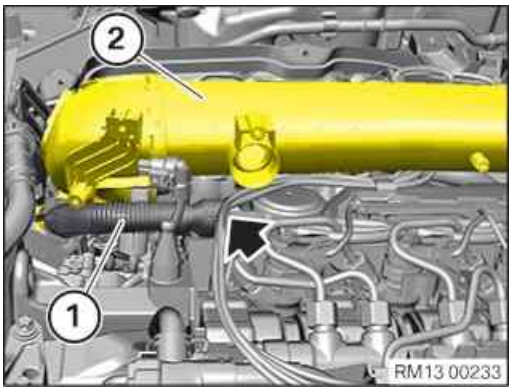

- Feed in ventilation line (1) at clean air pipe (2) and install.
- Feed in ventilation line (1) at cylinder head cover (arrow) and install.

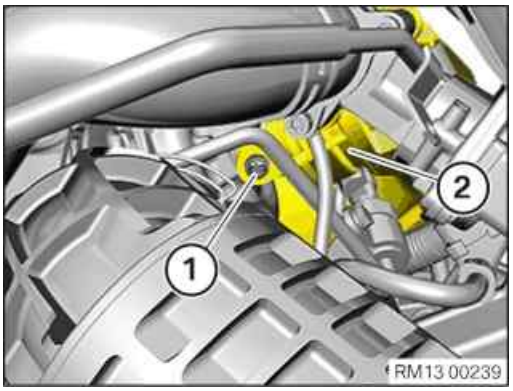

- Tighten screw (1) from clean air pipe (2).

Clean air pipe to exhaust turbocharger

Torx bolt BM8x25		Tightening torque	8 Nm

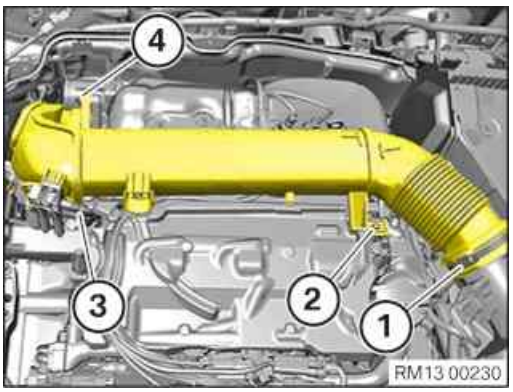

- Tighten down screw (4).

Clean air pipe to exhaust turbocharger

Torx bolt BM8x25		Tightening torque	8 Nm

- Connect and lock the connector (3).

  The connector (3) must engage audibly.
- Renew the screw (2).

  Parts: Screw
- Tighten down screw (2).

Clean air pipe to cylinder head cover

Oval-head screw	Renew screw.	Tightening torque	8 Nm

- Tighten the screw clamp (1).

Clean air pipe to intake silencer housing

Clamp		Tightening torque	3 Nm

38 – Connect the coolant line

TECHNICAL INFORMATION

Make sure that the connections are locked correctly. The locks must engage audibly.

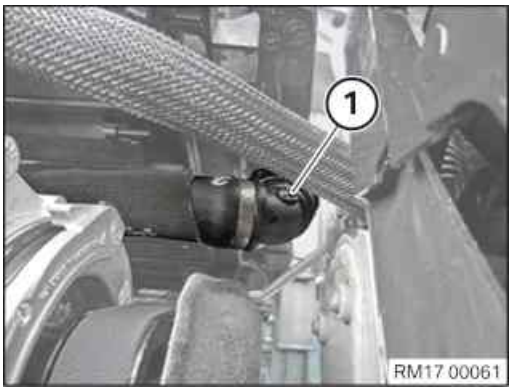

- Connect the right coolant line (1) to the radiator and lock audibly.

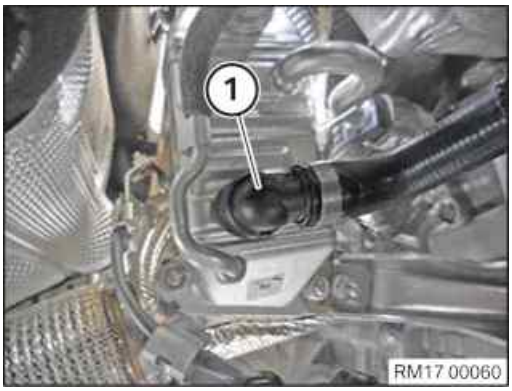

- Connect the coolant line (1) to the low pressure exhaust-gas recirculation cooler on the diesel particulate filter and lock audibly.

39 – Install cross connection

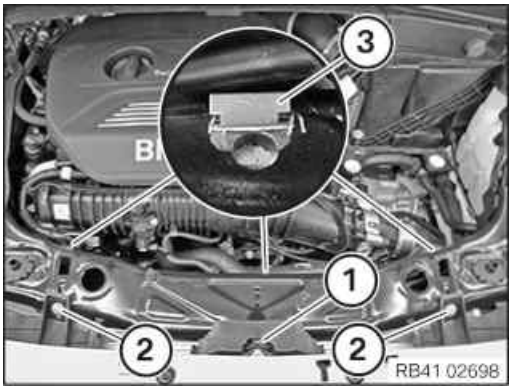

- Install cross connection.
- Position all screws.
- Tighten down screw (1).

Bracing strut to top cross connection

M8		Tightening torque	25 Nm

- Tighten down screws (2).

Air duct to deformation element/cross connection

M6x20 screw		Tightening torque	6 Nm

- Fasten clamps (3) for bonnet lock Bowden cable to cross connection.

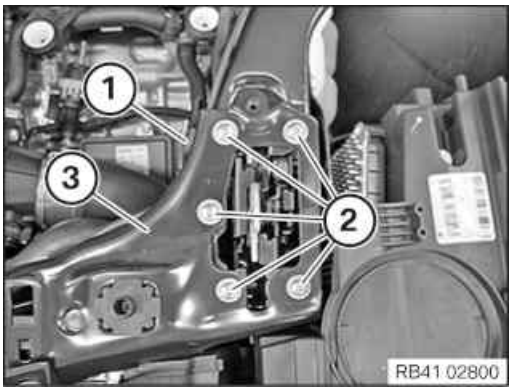

- Tighten screws (2) of cross connection (3).

Cross connection on support for cross connection

M6x20		Tightening torque	12 Nm

- Fasten expanding rivet (1).

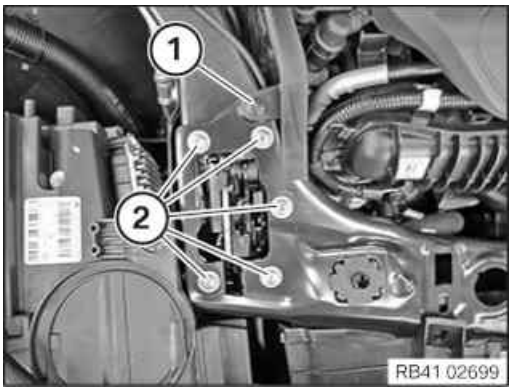

- Tighten down screws (2).

Cross connection on support for cross connection

M6x20		Tightening torque	12 Nm

- Fasten expanding rivet (1).

40 – Installing intake silencer housing

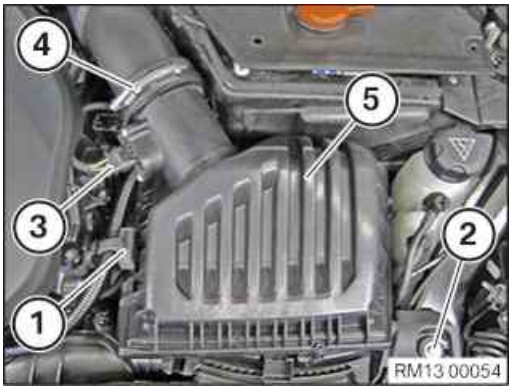

- Insert the intake silencer housing (5) into the rubber mounts and install it.

  Intake filter housing (5) must engage audibly.
- Tighten down screw (2).

Intake silencer housing to lock bridge

M6X30		Tightening torque	8 Nm

- Tighten clamp (4).

Clean air pipe to intake silencer housing

Clamp		Tightening torque	3 Nm

- Connect and lock the connector (3).

  The connector (3) must engage audibly.
- Insert and install the holder (1).

41 – Install the intake neck for the intake filter housing

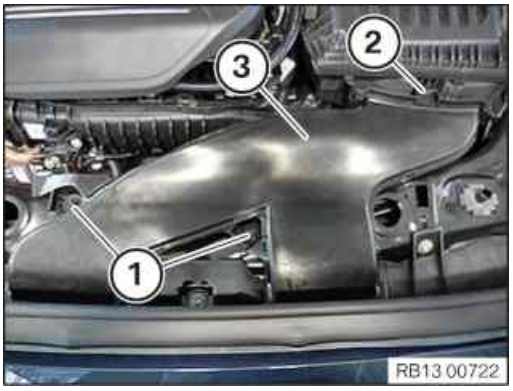

- Insert and install the intake neck (3).

  The lock (2) must audibly engage.
- Tighten nuts (1).

Intake neck to cross connection

M6		Tightening torque	8 Nm

42 – Installing the front underbody protection

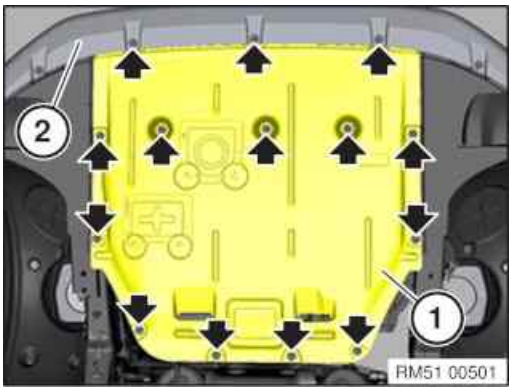

- Guide the front underbody protection (1) in under the bumper panel (2) and position it at the screw points.
- Tighten screws (arrows).

Underbody protection front

			3 Nm

43 – Install the acoustic cover for the injectors

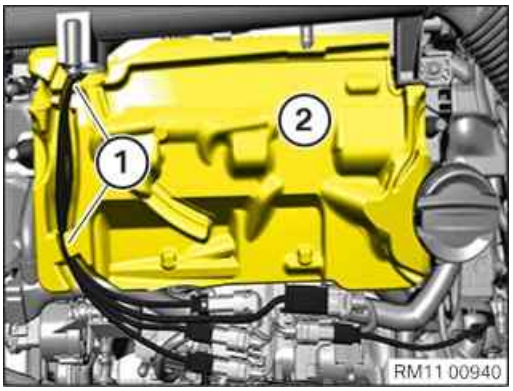

- Feed the acoustic cover (2) in and install.
- Fasten the wiring harness (1) to the brackets.

44 – Install resonator

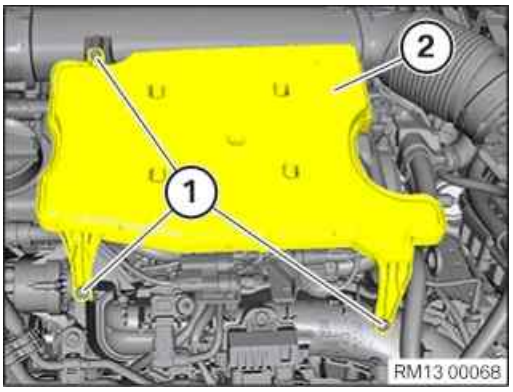

- Insert and install the resonator (2).
- Renew screws (1).

  Parts: Bolts
- Tighten the screws (1).

Resonator to manifold and clean air pipe

Screw TS6	Renew screw.	Tightening torque	5 Nm

45 – Install acoustic cover

RISK OF DAMAGE

Damage to the acoustic cover.

Jerky movements during disassembly and excessive application of force during installation may result in breakage of the acoustic cover.

- Disassemble or mount the acoustic cover carefully.
- Disassemble or mount snap-lock couplings of the ball pivots one after the other.
- Disassemble or mount acoustic cover only at temperatures >20 °C.
- Use only distilled water as an auxiliary material during installation, no lubricants.

- Check for correct installation of all rubber mounts in the acoustic cover (1).

- Clip in the acoustic cover into the holders in the indicated areas.
- Make sure that the acoustic cover engages audibly.

46 – Installing the upper bulkhead cover

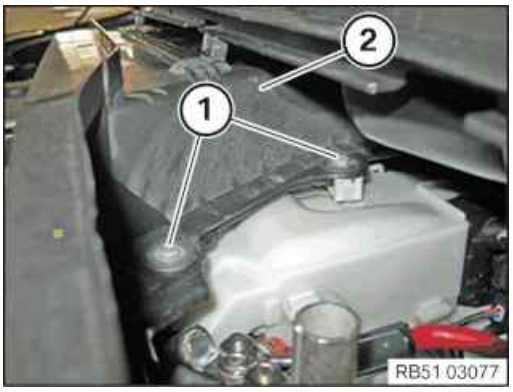

- Feed in and install cover (2) of the bulkhead at the top.
- Tighten the screws (1).

Bulkhead cover, top

Screw		Tightening torque	3 Nm

- Tighten the screws (1).

Bulkhead cover, top

Screw		Tightening torque	3 Nm

- Tighten the screws (1).

Bulkhead cover, top

Screw		Tightening torque	3 Nm

47 – Install the rear cowl panel cover

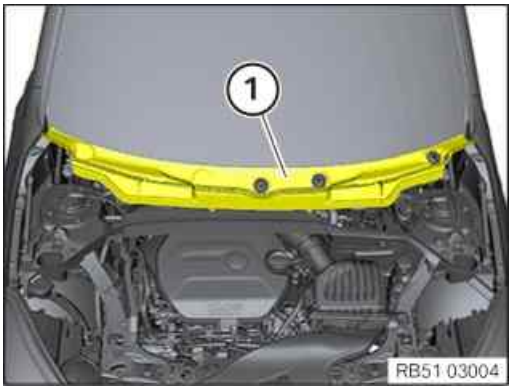

- Feed in and engage the rear cowl panel cover (1).

48 – Install the gutter strip on the windscreen on the left and right

NOTICE

Description is for left component only. Procedure on the right side is identical.

▸ **Install the gutter strip on the windscreen**

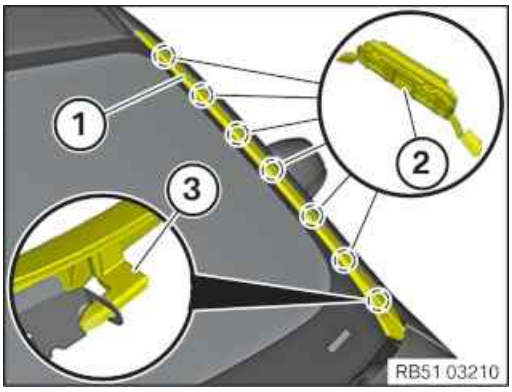

- Check the clamps (2) for damage and renew if necessary.
- Insert the gutter strip (1) with the guide (3).
- Align the gutter strip (1) at the roof and clip it in.

49 – Install left and right wiper arm

NOTICE

Description is for left component only. Procedure on the right side is identical.

▶ **Install the wiper arm**

TECHNICAL INFORMATION

The wiper system must be in zero position.
After installing the cowl panel cover and before fitting the wiper arm:
Activate the wiper system once to ensure that it has the correct installation position.

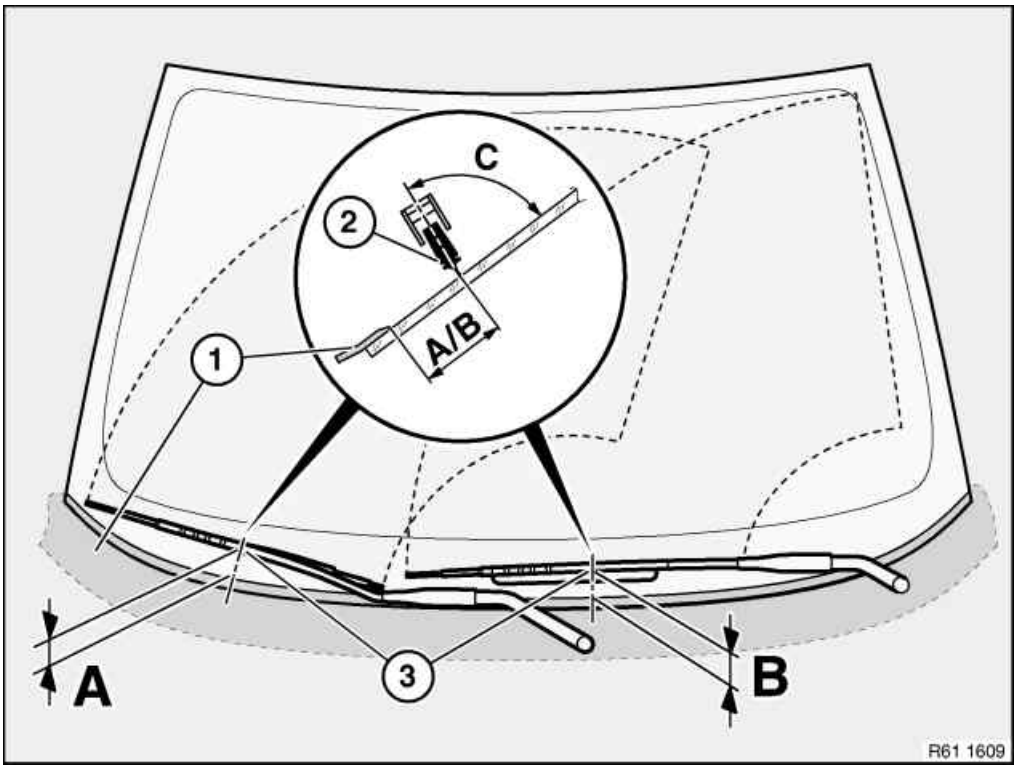

- Connect the wiper arm (3).
- Correctly position the wiper arm (2) in relation to the window edge (1).

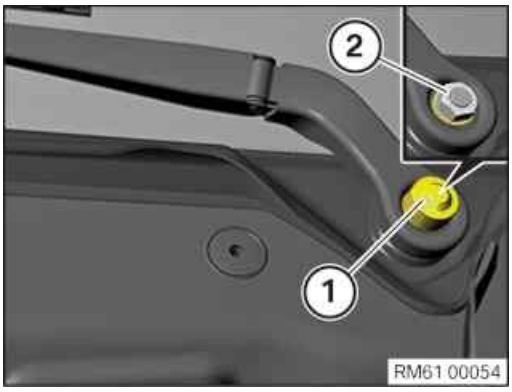

NOTICE

Description is for left component only. Procedure on the right side is identical.

- Tighten nut (2).

Windscreen wiper arm

Combination hexagon nut		Tightening torque	35 Nm

- Connect the protective cap (1).

50 – Installing front cowl panel cover

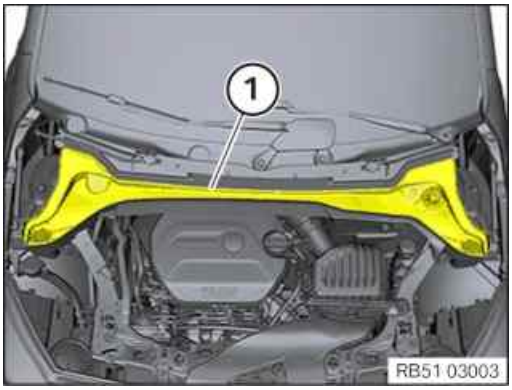

- Insert the cowl panel cover front (1) to the rear and install.
- Check cowl panel cover at front is correctly seated (1).

51 – Install the seal for the bonnet

NOTICE

Schematic diagram is for example purposes. Some parts may differ in certain details.

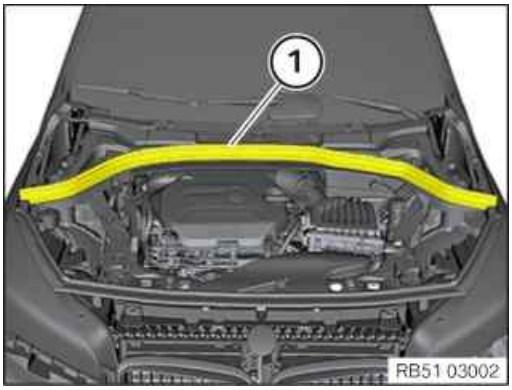

- Install bonnet seal at rear (1).
- Ensure that the rear bonnet seal (1) is fitted correctly.

52 – Disconnecting all battery earth leads

- See additional information.

53 – Fill and bleed the coolant circuit

▶ **Filling and bleed the high-temperature coolant circuit**

- See additional information.

Additional Information

Overview of Tightening Torques

Holder of high pressure pump to crankcase			Used in step 27
M8x33	Observe tightening sequence.	Tightening torque	19 Nm

High pressure pump to crankcase			Used in step 27
M8x33		Tightening torque	19 Nm

Central bolt of high pressure pump to camshaft sprocket			Used in step 27
M12x1		Tightening torque	65 Nm

Screw plug to end cover			Used in step 27
M34x1.5		Tightening torque	20 Nm

High pressure pump cover			Used in step 27
Screw		Tightening torque	1,5 Nm

Charge air line to crankcase			Used in step 29
M6x25		Tightening torque	5 Nm

Charge air duct to oil sump			Used in step 29
M6		Tightening torque	8 Nm

Wheel arch cover			Used in step 30
Screw			3 Nm
Plastic nut			2,6 Nm

Brake disc to front wheel hub			Used in step 31
M8	Renew screw.		16 Nm

Wheel bolts Used in step 31

M 14/AF 17	Screw in wheel bolts and evenly tighten crosswise by hand in order to centre the wheel rim. Tighten wheel bolts to the prescribed tightening torque with a calibrated torque wrench in a crosswise sequence. Check all the wheel bolts in the same order or retighten to the prescribed tightening torque again.	Tightening torque Check	140 Nm 140 Nm

Connecting branch to engine block Used in step 32

M6x25		Tightening torque	8 Nm

High pressure line between high pressure pump and rail Used in step 33

High-pressure pipe		Tightening torque	28 Nm

Intake plenum to cylinder head Used in step 34

M6		Tightening torque	11 Nm

Wiring harness to cylinder head cover Used in step 36

TS5x20		Tightening torque	3,5 Nm

Positive battery cable to alternator Used in step 36

M8		Tightening torque	19 Nm

Fuel line to intake plenum Used in step 36

TS6x20		Tightening torque	5 Nm

Cover to electronics box Used in step 36

RF5x26.5		Tightening torque	2,5 Nm

Positive battery terminal to battery Used in step 36

NutM6		Tightening torque	5 Nm

Tension strut to spring strut dome/battery tray Used in step 36

M8		Tightening torque	19 Nm

Positive battery connection point cover to engine compartment partition wall Used in step 36

		Tightening torque	3 Nm

Battery cover Used in step 36

Screw			2,8 Nm

Clean air pipe to exhaust turbocharger Used in step 37

Torx bolt BM8x25		Tightening torque	8 Nm

Clean air pipe to cylinder head cover Used in step 37

Oval-head screw	Renew screw.	Tightening torque	8 Nm

Clean air pipe to intake silencer housing Used in step 37 40

Clamp		Tightening torque	3 Nm

Bracing strut to top cross connection			Used in step 39
M8		Tightening torque	25 Nm

Air duct to deformation element/cross connection			Used in step 39
M6x20 screw		Tightening torque	6 Nm

Cross connection on support for cross connection			Used in step 39
M6x20		Tightening torque	12 Nm

Intake silencer housing to lock bridge			Used in step 40
M6X30		Tightening torque	8 Nm

Intake neck to cross connection			Used in step 41
M6		Tightening torque	8 Nm

Underbody protection front			Used in step 42
			3 Nm

Resonator to manifold and clean air pipe			Used in step 44
Screw TS6	Renew screw.	Tightening torque	5 Nm

Bulkhead cover, top			Used in step 46
Screw		Tightening torque	3 Nm

Windscreen wiper arm			Used in step 49
Combination hexagon nut		Tightening torque	35 Nm

Overview of Special Tools

0 490 796 (11 1 480) Pliers

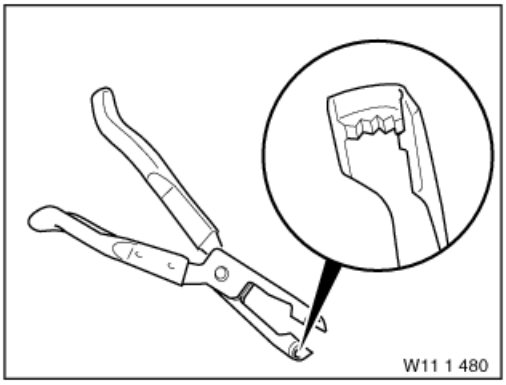

Common		Used in step 17
Usage	For removing valve stem seal	
Included in the tool or work		
Storage location	A10	
Replaced by		
In connection with		
SI-Number	01 01 93 (621)	

0 495 910 (37 1 152) Socket wrench

Common		Used in step 20 33
Usage	(Socket wrench)SW19	
Included in the tool or work	0 495 908	
Storage location	B21	
Replaced by		
In connection with		
SI-Number	01 01 07 (333)	

2 413 106 Fastener

Common	Used in step 20 26 33
Usage	For avoiding contamination and damage of rail, injectors and high pressure pump.
Included in the tool or work	
Storage location	Individual
Replaced by	
In connection with	
SI-Number	01 16 16 (419)

0 493 380 (11 6 480) Connector

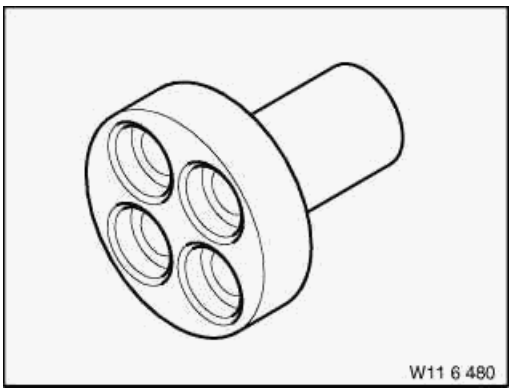

Common	Used in step 26
Usage	For turning over engine at crankshaft hub (vibration absorber) when adjusting valve timing
Included in the tool or work	
Storage location	B2
Replaced by	
In connection with	
SI-Number	01 11 98 (338)

2 288 380 Locating stud

Common	Used in step 26 27
Usage	For disconnecting the crankshaft at TDC. Contour-graphic silhouette foil is included in delivery specification. Further information on the contour-graphic silhouette foil can be found in service information 00 22 13 (969).
Included in the tool or work	
Storage location	A56
Replaced by	
In connection with	
SI-Number	01 04 14 (071)

2 359 956 Lever

Common	Used in step 27
Usage	For positioning the high pressure pump in installation position during installation. Contour-graphic silhouette foil is included in delivery specification. Further information on the contour-graphic silhouette foil can be found in service information 00 22 13 (969).
Included in the tool or work	
Storage location	A55
Replaced by	
In connection with	
SI-Number	01 46 14 (191)

2 344 011 Tool

Common	Used in step 31
Usage	Tool (wheel hub grinder) for cleaning the connection of the wheel rim (wheel contact face) to the wheel hub.
Included in the tool or work	
Storage location	
Replaced by	
In connection with	
SI-Number	08 08 12 (872)

0 495 102 (11 4 470) Tool

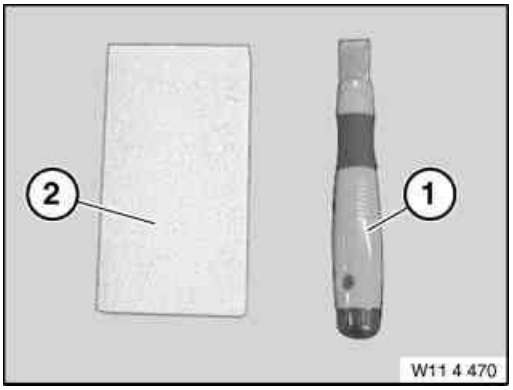

Common	Used in step 32
Usage	(cleaning kit) For cleaning sealing surfaces on magnesium crankcase/cylinder head.
Included in the tool or work	
Storage location	C52
Replaced by	
In connection with	
SI-Number	01 17 04 (130)

Consisting of

Pos	BMW Order number	Replaced by	Designation	In Connection with
1	0 495 103 (11 4 471)		**Scraper**	
2	0 495 104 (11 4 472)		**Extractor** (grindstone)	

Replacement tools:

0 495 221 (36 1 323) Wheel stud

Common	Used in step 22
Usage	(Code 30) Code 39 available separately, (see EPC) under 36 13 1 181 259
Included in the tool or work	0 492 518
Storage location	
Replaced by	
In connection with	
SI-Number	

0 495 224 (36 1 326) Wheel stud

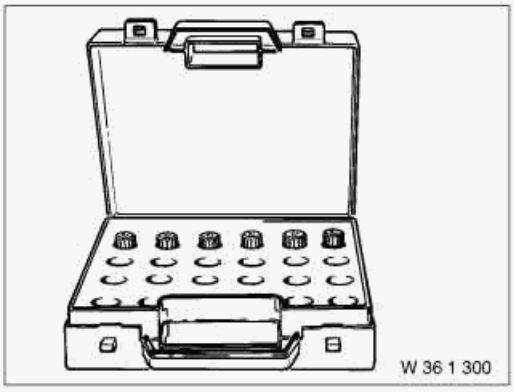

Common	Used in step 22
Usage	(Code 33) With centring bore available separately, (see EPC) under 36 13 6 765 546
Included in the tool or work	0 492 518
Storage location	
Replaced by	
In connection with	
SI-Number	

0 495 225 (36 1 327) Wheel stud

Common	Used in step 22
Usage	(Code 34) With centring bore available separately (see EPC) under 36 13 6 765 547
Included in the tool or work	0 492 518
Storage location	
Replaced by	
In connection with	
SI-Number	

0 495 226 (36 1 328) Wheel stud

Common	Used in step 22
Usage	(Code 35) With centring bore available separately, (see EPC) under 36 13 6 762 340
Included in the tool or work	0 492 518
Storage location	
Replaced by	
In connection with	
SI-Number	

0 495 227 (36 1 329) Wheel stud

Common	Used in step 22
Usage	(Code 36) With centring bore available separately (see EPC) under 36 13 6 762 341
Included in the tool or work	0 492 518
Storage location	
Replaced by	
In connection with	
SI-Number	

0 495 228 (36 1 331) Wheel stud

Common	Used in step 22
Usage	(Code 37) With centring bore available separately (see EPC) under 36 13 6 762 342
Included in the tool or work	0 492 518
Storage location	
Replaced by	
In connection with	
SI-Number	

0 495 229 (36 1 332) Wheel stud

Common	Used in step 22
Usage	(Code 38) With centring bore available separately (see EPC) under 36 13 6 762 343
Included in the tool or work	0 492 518
Storage location	
Replaced by	
In connection with	
SI-Number	

0 495 230 (36 1 333) Wheel stud

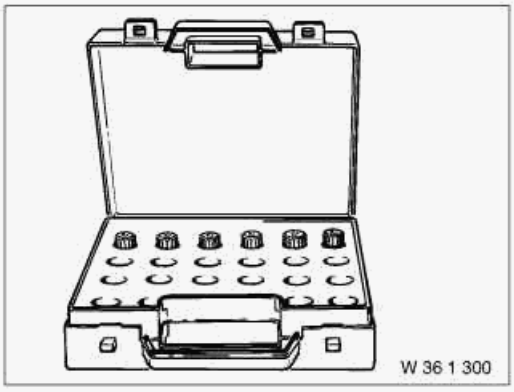

Common	Used in step 22
Usage	(Code 40) With centring bore available separately (see EPC) under 36 13 6 762 344
Included in the tool or work	0 492 518
Storage location	
Replaced by	
In connection with	
SI-Number	

Overview Technical Data

Links

Repair instructions	**Used in step**
61 20 900 Disconnecting and connecting battery earth lead	1 52
61 20 900 Disconnecting and connecting battery earth lead	1 52
61 20 900 Disconnecting and connecting battery earth lead	1 52
61 20 900 Disconnecting and connecting battery earth lead	1 52
61 20 900 Disconnecting and connecting battery earth lead	1 52
61 20 900 Disconnecting and connecting battery earth lead	1 52
61 20 900 Disconnecting and connecting the battery earth lead (all battery earth leads)	1 52
61 20 900 Disconnecting and connecting the battery earth lead (all battery earth leads)	1 52
61 20 900 Disconnecting and connecting battery earth lead	1 52
61 20 900 Disconnecting and connecting the battery earth lead (all battery earth leads)	1 52
61 20 900 Disconnect and connect battery earth lead (Plug-in Hybrid Electric Vehicle)	1 52
61 20 900 Disconnecting and connecting battery earth lead	1 52
61 20 900 Disconnecting and connecting battery earth lead	1 52
61 20 900 Disconnecting and connecting battery earth lead	1 52
61 20 900 Disconnecting and connecting battery earth lead	1 52
61 20 900 Disconnecting and connecting battery earth lead	1 52
61 20 900 Disconnecting and connecting battery earth lead	1 52
61 20 900 Disconnecting and connecting battery earth lead	1 52
61 20 900 Disconnecting and connecting battery earth lead	1 52
61 20 900 Disconnecting and connecting battery earth lead	1 52
61 20 900 Disconnecting and connecting battery earth lead	1 52
61 20 900 Disconnecting and connecting the battery earth lead (all battery earth leads)	1 52
61 20 900 Disconnecting and connecting battery earth lead	1 52
61 20 900 Disconnecting and connecting battery earth lead	1 52

61 20 900 Disconnecting and connecting battery earth lead 1 52
61 20 900 Disconnecting and connecting battery earth lead 1 52
61 20 900 Disconnecting and connecting battery earth lead 1 52
61 20 900 Disconnecting and connecting battery earth lead 1 52
61 20 900 Disconnecting and connecting battery earth lead 1 52
17 00 008 Draining and topping up coolant for high-temperature circuit 53
17 00 008 Draining and topping up coolant for high-temperature circuit 53
17 00 008 Draining and topping up coolant for high-temperature circuit 53
17 00 039 Bleed the cooling system and check it for watertightness with the special tool

17 00 039 Bleeding the cooling system and checking watertightness using a special tool (coolant circuit for high temperatures)	53
17 00 039 Bleed the cooling system and check it for watertightness with the special tool	53
17 00 039 Bleeding the cooling system and checking watertightness using a special tool (coolant circuit for high temperatures)	53
17 00 039 Bleeding the cooling system and checking watertightness using a special tool (coolant circuit for high temperatures)	53
17 00 039 Bleeding the cooling system and checking watertightness using a special tool (coolant circuit for high temperatures)	53

Operating materials	Used in step
2.0 Grease for wheel centring	31

13 53 318 Remove and install all injectors in the injection system

PRELIMINARY WORK

1 – Removing the acoustic cover

WARNING

Hot surfaces.

Risk of burning!

- Perform all work only on components that have cooled down.

RISK OF DAMAGE

Damage to the acoustic cover.

Jerky movements during disassembly and excessive application of force during installation may result in breakage of the acoustic cover.

- Disassemble or mount the acoustic cover carefully.
- Disassemble or mount snap-lock couplings of the ball pivots one after the other.
- Disassemble or mount acoustic cover only at temperatures >20 °C.
- Use only distilled water as an auxiliary material during installation, no lubricants.

- Unclip the acoustic cover from the marked areas towards the top.

2 – Remove resonator

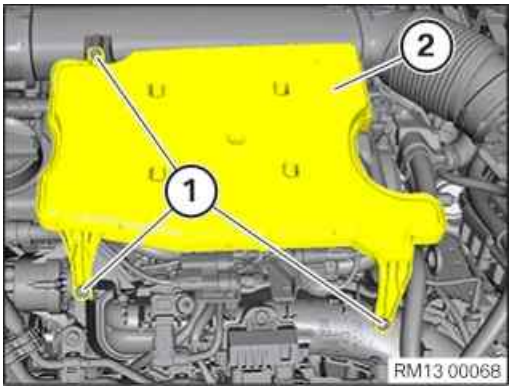

- Loosen screws (1).
- Guide out and remove the resonator (2).

3 – Remove the acoustic cover for the injectors

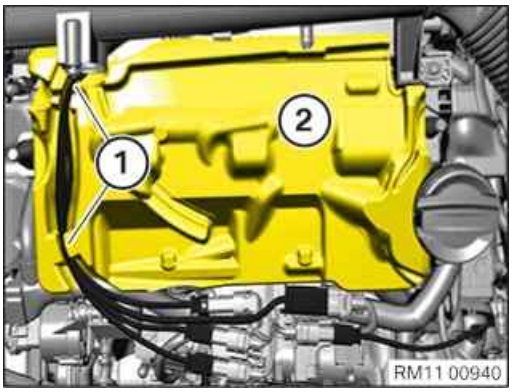

- Release the wiring harness (1) from the brackets.
- Guide the acoustic cover (2) out and remove.

4 – Detaching leakage oil line from injector

WARNING

Working on fuel system.

Risk of fire! Danger of explosion!

- When working on the fuel system, make sure that the workbay is sufficiently ventilated, e.g. using extraction unit.
- Tightly seal off open lines and connections; collect any escaping fuel directly at the point of exit.
- No fire, sparks, open flames or smoking.

WARNING

Hot surfaces.

Risk of burning!

- Perform all work only on components that have cooled down.

RISK OF DAMAGE

Contaminant or foreign body.

Contamination can result in malfunctions, operating failure or leaks.

- Adhere to the utmost cleanliness.
- Protect components from contamination e.g. by covering.
- Close off line connections with seal plugs.

TECHNICAL INFORMATION

Collect and dispose of emerging fluids. Observe country-specific waste disposal regulations.

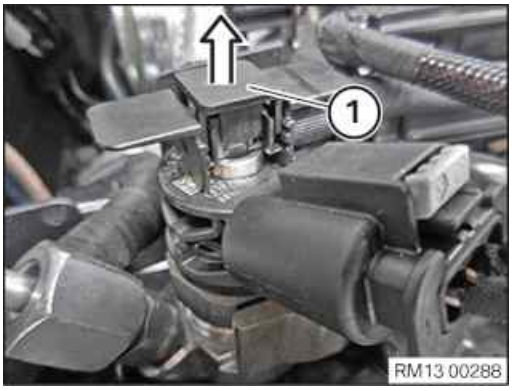

- Release lock (1) in direction of arrow.
- Pull the leakage oil line off the injector in direction of arrow.

5 – Removing high pressure lines between rail and injectors

WARNING

Hot surfaces.

Risk of burning!

- Perform all work only on components that have cooled down.

WARNING

Working on fuel system.

Risk of fire! Danger of explosion!

- When working on the fuel system, make sure that the workbay is sufficiently ventilated, e.g. using extraction unit.
- Tightly seal off open lines and connections; collect any escaping fuel directly at the point of exit.
- No fire, sparks, open flames or smoking.

CAUTION

On releasing high pressure line, fuel may emerge at high speed.

Danger of injury!

- Wear suitable personal protective equipment.
- Allow the cooling system to cool down to a temperature below 40°C before starting installation work.
- Note warnings on cylinder head cover.

RISK OF DAMAGE

Contaminant or foreign body.

Contamination can result in malfunctions, operating failure or leaks.

- Adhere to the utmost cleanliness.
- Protect components from contamination e.g. by covering.
- Close off line connections with seal plugs.

TECHNICAL INFORMATION

If several high pressure lines are removed, ensure that each high pressure line is re-installed in its original installation location. Mark high pressure lines.

TECHNICAL INFORMATION

Reset special tool in early to avoid bending pressure lines.

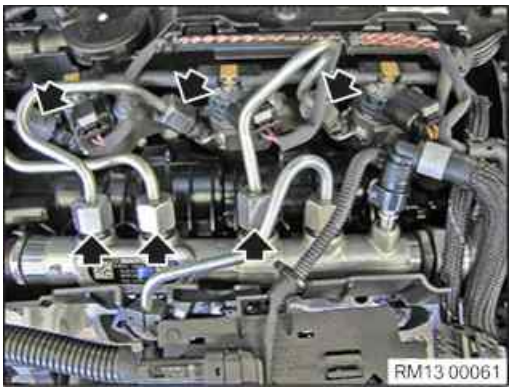

- Release the high pressure lines (arrows) with the special tool **0 495 910 (37 1 152)**.
- Feed out and remove the high pressure lines (arrows).
- Seal off all the open cable connections with the special tool **2 413 106**.

MAIN WORK

6 – Removing injectors of injection system

WARNING

Hot surfaces.

Risk of burning!

- Perform all work only on components that have cooled down.

WARNING

Working on fuel system.

Risk of fire! Danger of explosion!

- When working on the fuel system, make sure that the workbay is sufficiently ventilated, e.g. using extraction unit.
- Tightly seal off open lines and connections; collect any escaping fuel directly at the point of exit.
- No fire, sparks, open flames or smoking.

CAUTION

On releasing high pressure line, fuel may emerge at high speed.

Danger of injury!

- Wear suitable personal protective equipment.
- Allow the cooling system to cool down to a temperature below 40°C before starting installation work.
- Note warnings on cylinder head cover.

RISK OF DAMAGE

Contaminant or foreign body.

Contamination can result in malfunctions, operating failure or leaks.

- Adhere to the utmost cleanliness.
- Protect components from contamination e.g. by covering.
- Close off line connections with seal plugs.

RISK OF DAMAGE

Damage to wires when disconnecting connectors and plug connections.

Sheared wires can cause a short circuit.

- Do not pull on the wires when disconnecting connectors and plug connections.

RISK OF DAMAGE

Electrostatic discharge.

Damage to or destruction of electrical components.

- Leave electrical components in original packaging until just before they are installed. Use the original packaging only for any return shipments. Always package removed components straight away.
- Read and comply with user information on using the associated special tool 12 7 060.
- Only touch the housings of electrical components. Do not touch pins or multi-pin connectors directly.
- Wear electrically conductive clothing and antistatic shoes (with ESD symbol).
- For additional information see: 61 35 Information on electrostatic discharge (ESD) protection.

TECHNICAL INFORMATION

If several injectors are removed, ensure that each injector is reinstalled in its original installation location (cylinder). Mark injectors.

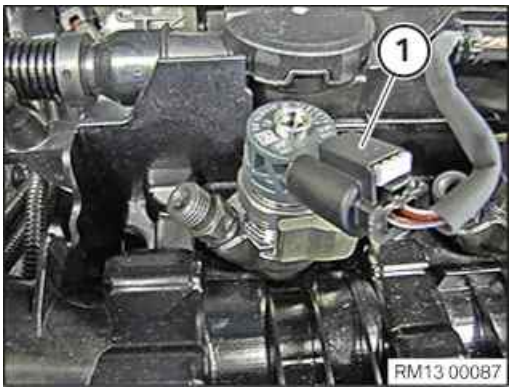

- Unlock and disconnect connector (1).

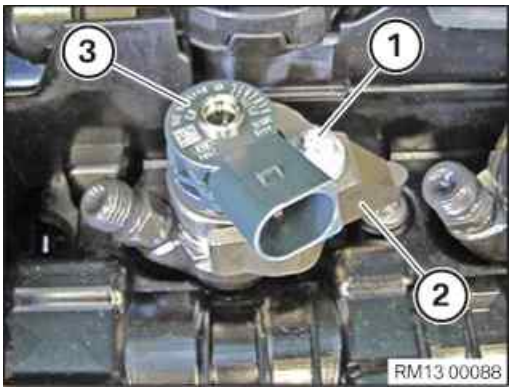

- Loosen screw (1).
- Guide out and remove clamping claw (2).
- Feed out and remove the injector (3) with slight rotational movements.

▶ **Loosen stuck injectors**

RISK OF DAMAGE

Contaminant or foreign body.

Contamination can result in malfunctions, operating failure or leaks.

- Adhere to the utmost cleanliness.
- Protect components from contamination e.g. by covering.
- Close off line connections with seal plugs.

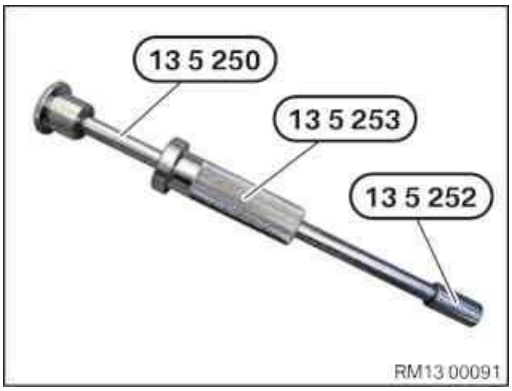

- Unscrew the bush **0 493 321 (13 5 250)** from the special tool **0 493 339 (13 5 252)** and remove the impact weight **0 493 340 (13 5 253)**.
- Screw the bush **0 493 339 (13 5 252)**back onto the special tool **0 493 321 (13 5 250)**.

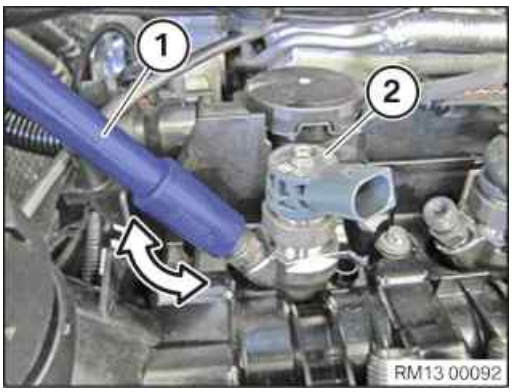

- Screw the special tool (1)**0 493 321 (13 5 250)** with the bush **0 493 339 (13 5 252)** onto the pressure line connection of the injector (2).
- Loosen and remove injector (2) using the special tool (1)**0 493 321 (13 5 250)** and **0 493 339 (13 5 252)** in **short** reciprocating motions.

7 – Installing injectors of injection system

▶ **Cleaning the injector shafts**

CAUTION

Swirling dirt particles caused by compressed air.

Danger of injury!

- Collect dirt particles, e.g. when blowing out, use cloth to do so.

- Wear safety goggles.

RISK OF DAMAGE

Contaminant or foreign body.

Contamination can result in malfunctions, operating failure or leaks.

- Adhere to the utmost cleanliness.
- Protect components from contamination e.g. by covering.
- Close off line connections with seal plugs.

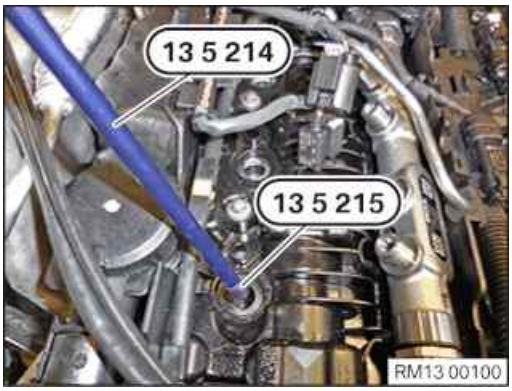

- Check whether the sealing ring remained in the injector shaft and remove the sealing ring as needed.
- Insert the special tool **0 493 763 (13 5 215)** with the special tool **0 493 762 (13 5 214)** from the set of special tools **0 493 758 (13 5 210)** into the injector shaft.
- Remove special tool **0 493 762 (13 5 214)**.

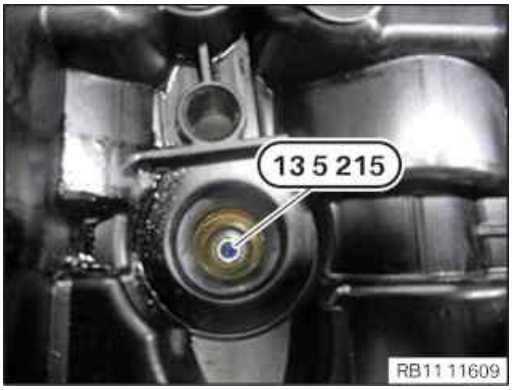

- After insertion, special tool **0 493 763 (13 5 215)** must remain in the injector shaft after cleaning without fail.

- Insert special tool **0 493 758 (13 5 210)** into the injector shaft.

- Move special tool **0 493 758 (13 5 210)** (1) up and down in the injector shaft with rotational movements.
- Feed out special tool **0 493 758 (13 5 210)**(1) from the injector shaft and remove.

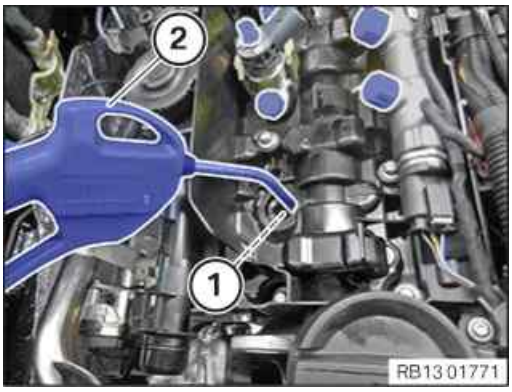

- Blow out injector shaft (1) with air gun (2).

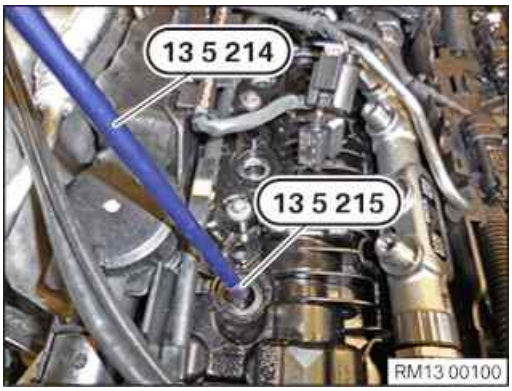

- Feed the special tool **0 493 762 (13 5 214)** into the injector shaft and screw it in with the special tool **0 493 763 (13 5 215)**.
- Feed out special tool **0 493 762 (13 5 214)**with special tool **0 493 763 (13 5 215)** from the injector shaft and remove.

▶ **Check the placement of the clamping claw**

RISK OF DAMAGE

Contaminant or foreign body.

Contamination can result in malfunctions, operating failure or leaks.

- Adhere to the utmost cleanliness.
- Protect components from contamination e.g. by covering.
- Close off line connections with seal plugs.

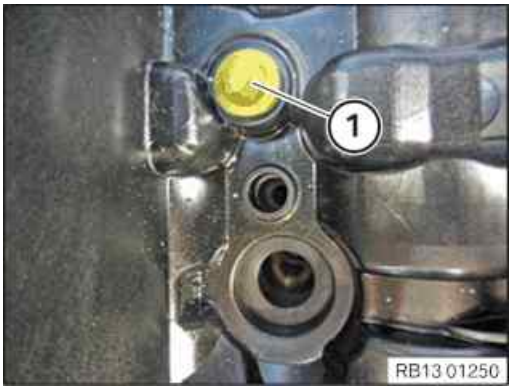

- Tighten down screw (1).

  The clamping claw is positioned on the bolt (1).

Clamping claw facing to cylinder head cover

Screw M6		Tightening torque	8 Nm

▶ **Prepare the injector for installation**

RISK OF DAMAGE

Contaminant or foreign body.

Contamination can result in malfunctions, operating failure or leaks.

- Adhere to the utmost cleanliness.
- Protect components from contamination e.g. by covering.
- Close off line connections with seal plugs.

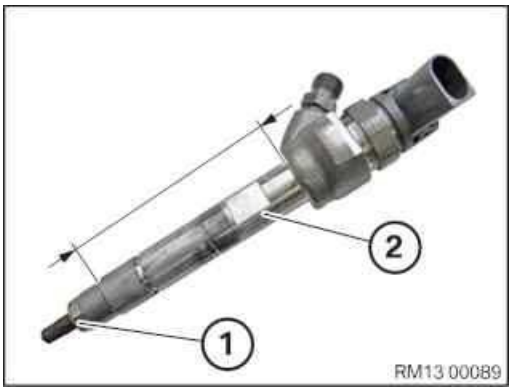

- Renew the copper sealing ring (1) on the injector (2).

  Parts: Copper sealing ring

- Lightly grease the injector in the marked area with heat-resistant grease before installing the injector (2) in the injector shaft.

Expendable materials

Injector lubricating grease	50 g, Can	83230441070

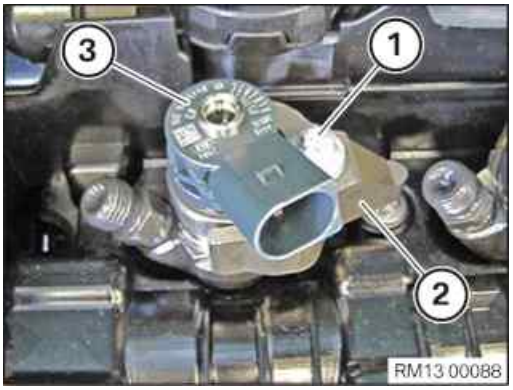

- Insert and install the injector (3).
- Insert and install the clamping claw (2).
- Tighten down screw (1).

Injector to cylinder head cover

Screw		Jointing torque	8 Nm
		Angle of rotation	120 °

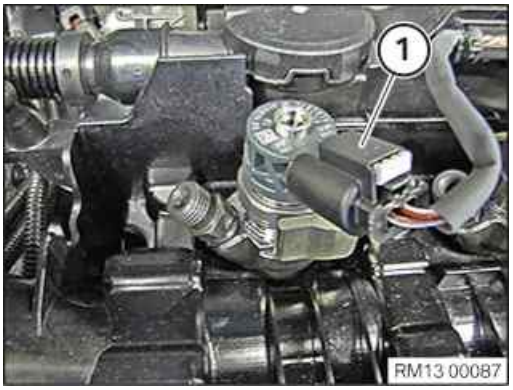

- Connect connectors (1) and lock.

  The connector (1) must engage audibly.

▸ **Replacement: Perform injection quantity compensation**

TECHNICAL INFORMATION

If the DDE control unit or an injector has been replaced, it will also be necessary to carry out injection quantity compensation. The adjustment value (7-position letter/number code) is engraved on each injector.

NOTICE

Schematic diagram is for example purposes. Some parts may differ in certain details.

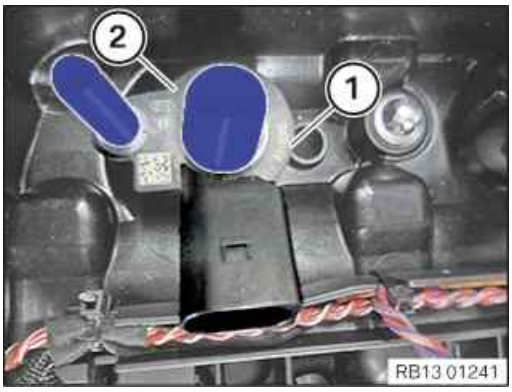

- Read off the adjustment value (1) on the new injector (2).

- Connect diagnosis system:
  - Vehicle identification
  - Function selection
  - Service functions
  - Digital diesel electronics (DDE)
  - Adjustment of injectors
  - Testing schedule
- Start service function with the right arrow button.

POSTPROCESSES

8 – Installing high pressure lines between rail and injectors

TECHNICAL INFORMATION

If several high pressure lines are removed, ensure that each high pressure line is re-installed in its original installation location. Mark high pressure lines.

TECHNICAL INFORMATION

Reset special tool in early to avoid bending pressure lines.

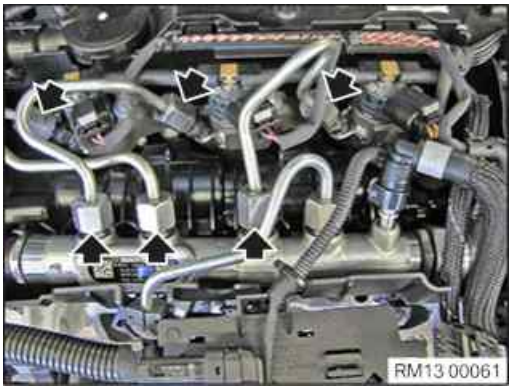

- Remove special tool **2 413 106**.
- Feed in and install the high pressure lines (arrows).
- Hand-tighten the high pressure lines (arrows).

TECHNICAL INFORMATION

Renew high pressure lines when the tightening torque exceeds the maximum of 30 Nm.

- Tighten the high pressure lines (arrows) with the special tool **0 495 910 (37 1 152)**.

High pressure lines between injector and rail

High pressure lines		Tightening torque	28 Nm

- Check the high pressure lines for tightness (**visual inspection**).

9 – Connect the leakage oil line on the injector

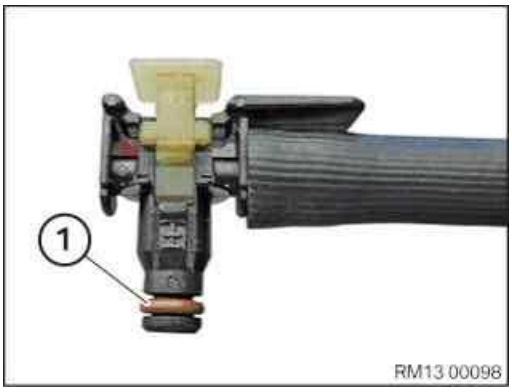

- Check the sealing ring (1) for damage and if necessary, renew the leakage oil line .

  Damaged sealing rings may cause malfunctions during fuel pressure build-up.
- Coat the sealing ring (1) with lubricant before connecting the leakage oil line to the injector.

- Feed leakage oil line into injector and install.
- Lock the lock in direction of arrow (1).

  The lock (1) must audibly engage.

10 – Install the acoustic cover for the injectors

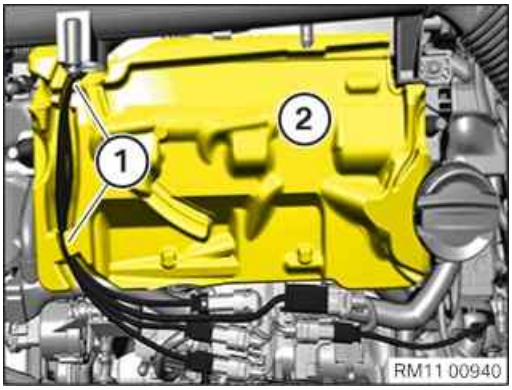

- Feed the acoustic cover (2) in and install.
- Fasten the wiring harness (1) to the brackets.

11 – Install resonator

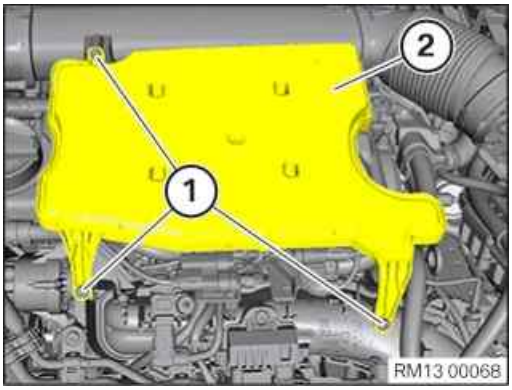

- Insert and install the resonator (2).
- Renew screws (1).

  Parts: Bolts
- Tighten the screws (1).

Resonator to manifold and clean air pipe

Screw TS6	Renew screw.	Tightening torque	5 Nm

12 – Install acoustic cover

RISK OF DAMAGE

Damage to the acoustic cover.

Jerky movements during disassembly and excessive application of force during installation may result in breakage of the acoustic cover.

- Disassemble or mount the acoustic cover carefully.
- Disassemble or mount snap-lock couplings of the ball pivots one after the other.
- Disassemble or mount acoustic cover only at temperatures >20 °C.
- Use only distilled water as an auxiliary material during installation, no lubricants.

- Check for correct installation of all rubber mounts in the acoustic cover (1).

- Clip in the acoustic cover into the holders in the indicated areas.
- Make sure that the acoustic cover engages audibly.

Additional Information

Overview of Tightening Torques

Clamping claw facing to cylinder head cover — Used in step 7

Screw M6		Tightening torque	8 Nm

Injector to cylinder head cover — Used in step 7

Screw		Jointing torque	8 Nm
		Angle of rotation	120 °

High pressure lines between injector and rail — Used in step 8

High pressure lines		Tightening torque	28 Nm

Resonator to manifold and clean air pipe — Used in step 11

Screw TS6	Renew screw.	Tightening torque	5 Nm

Overview of Special Tools

0 495 910 (37 1 152) Socket wrench

Common		Used in step 5 8
Usage	(Socket wrench)SW19	
Included in the tool or work	0 495 908	
Storage location	B21	
Replaced by		
In connection with		
SI-Number	01 01 07 (333)	

2 413 106 Fastener

Common		Used in step 5 8
Usage	For avoiding contamination and damage of rail, injectors and high pressure pump.	
Included in the tool or work		
Storage location	Individual	
Replaced by		
In connection with		
SI-Number	01 16 16 (419)	

0 493 321 (13 5 250) Puller

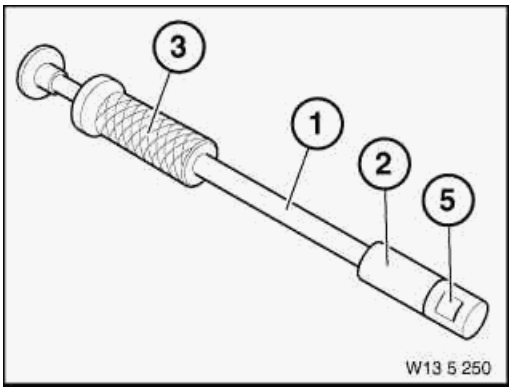

Common		Used in step 6
Usage	For removing injector nozzles or injectors from cylinder head	
Included in the tool or work		
Storage location	A16	
Replaced by		
In connection with		
SI-Number	01 06 98 (306)	

Consisting of

Pos	BMW Order number	Replaced by	Designation	In Connection with
1	0 493 338 (13 5 251)		**Rod** (guide rod)	
2	0 493 339 (13 5 252)		**Bush** (Threaded bush)	
3	0 493 340 (13 5 253)		**Weight** (Weight)	
4	0 493 379 (13 5 254)		**Claw** (Clamping claw) For removal of injector nozzles / engine: M57	
5	0 495 579 (13 5 255)		**Adapter** For removing steering shaft on E85. Refer to SI 01 11 06 (265)	

0 493 339 (13 5 252) Bush

Common		Used in step 6
Usage	(Threaded bush)	
Included in the tool or work	0 493 321	
Storage location		
Replaced by		
In connection with		
SI-Number		

0 493 340 (13 5 253) Weight

Common		Used in step 6
Usage	(Weight)	
Included in the tool or work	0 493 321	
Storage location		
Replaced by		
In connection with		
SI-Number		

0 493 763 (13 5 215) Plug

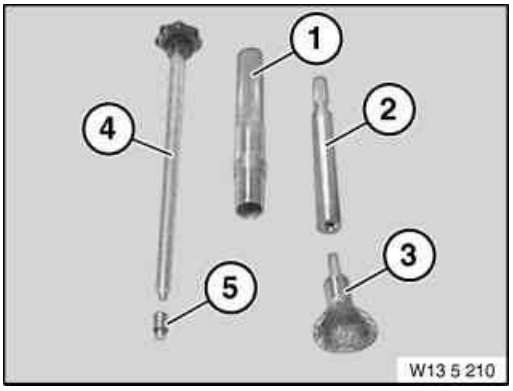

Common		Used in step 7
Usage	(Seal plug)	
Included in the tool or work	0 493 758	
Storage location		
Replaced by		
In connection with		
SI-Number		

0 493 762 (13 5 214) Rod

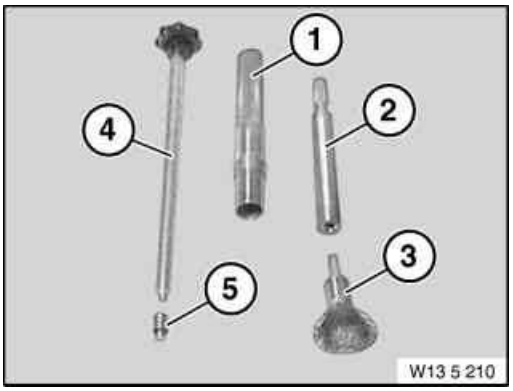

Common		Used in step 7
Usage	(Mounting rod) For the seal plug	
Included in the tool or work	0 493 758	
Storage location		
Replaced by		
In connection with		
SI-Number		

0 493 758 (13 5 210) Tool

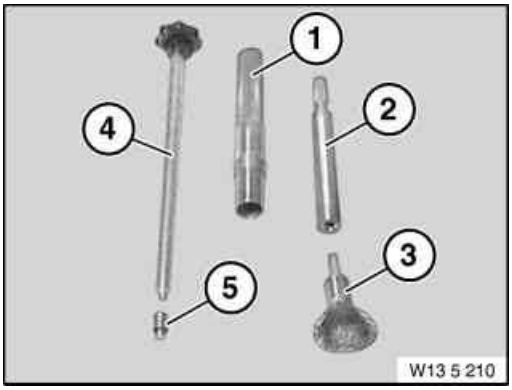

Common

Used in step 7

Usage	(Cleaning set) For injector channels
Included in the tool or work	
Storage location	B4
Replaced by	
In connection with	
SI-Number	01 05 00 (574)

Consisting of

Pos	BMW Order number	Replaced by	Designation	In Connection with
1	0 493 759 (13 5 211)		**Holding sleeve** (Guide sleeve)	
2	0 493 760 (13 5 212)		**Holder** (Brush holder)	
3	0 493 761 (13 5 213)		**Brush head**	
4	0 493 762 (13 5 214)		**Rod** (Mounting rod) For the seal plug	
5	0 493 763 (13 5 215)		**Plug** (Seal plug)	

Links

Repair instructions	Used in step
61 35 ... Notes on ESD protection (Electro Static Discharge)	6

13 53 318 Removing and installing/replacing all injectors in fuel injection system (B37, B47)

Special tools required:

- 13 5 210
- 13 5 214
- 13 5 215
- 2 413 106
- 13 5 252
- 13 5 250
- 13 5 253

Attention!

When working on the oil, coolant or fuel circuit, you must protect the alternator against contamination.

Cover alternator with suitable materials.

- Use only fluff-free cloths
- Remove all traces of dirt contamination before dismantling lines or separate components
- Close off all openings on injectors and pressure accumulator with protective caps 2 413 106 .

Recycling:

Catch and dispose of escaping fuel.

Observe country-specific waste disposal regulations.

Note:
Removal and installation is described on **one** injector.

The procedure for **other** injectors is identical.

Necessary preliminary work:

- Read out the fault memory of the DDE control unit.
- Detach all leakage oil lines from the injectors.
- Remove all pressure lines to injectors.
- Remove top bulkhead cover.
- Remove strut brace. **(F39, F48)**
- Seal all fuel system openings with protective caps.

Removal:

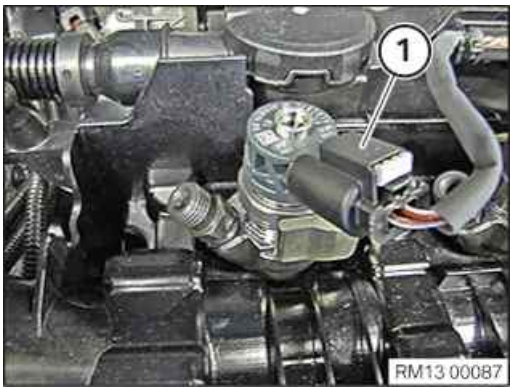

Unlock connector (1) and pull off.

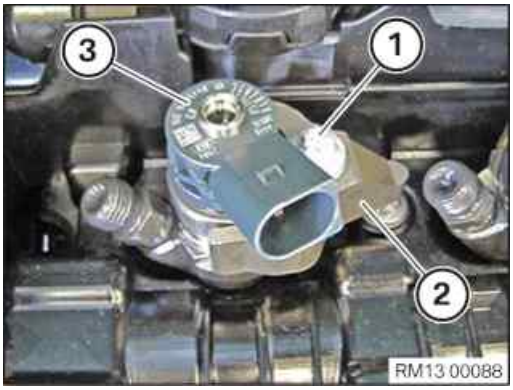

Release screw (1) of clamping claw (2).

Remove clamping claw (2) and screw (1).

Pull out injector (3) upwards with a slight rotational movement.

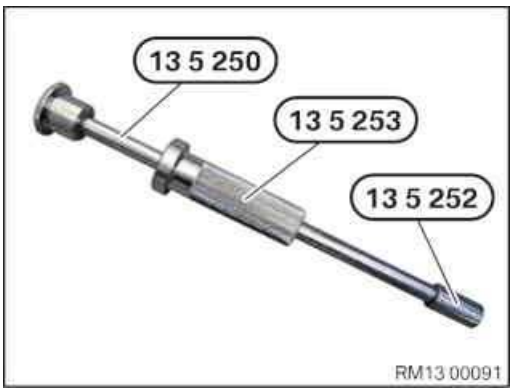

Procedure in event of stuck injectors:

Unscrew bush 13 5 252 from special tool 13 5 250 and remove impact weight 13 5 253 .

Screw bush 13 5 252 back onto special tool 13 5 250.

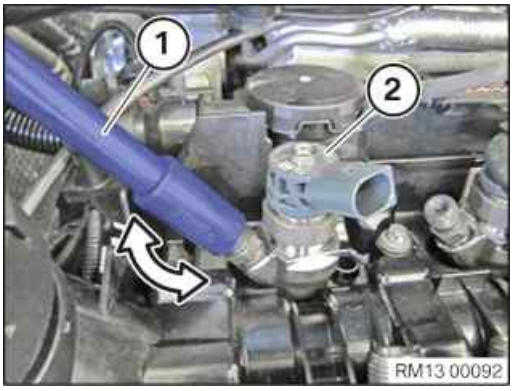

Screw on special tool 13 5 250 with bush 13 5 252 onto pressure line connection of injector (2).

Release and remove injector (2) with short back and forth movements.

Attention!

Move injector with removal rod only by a few degrees only.

Preparation for installation:

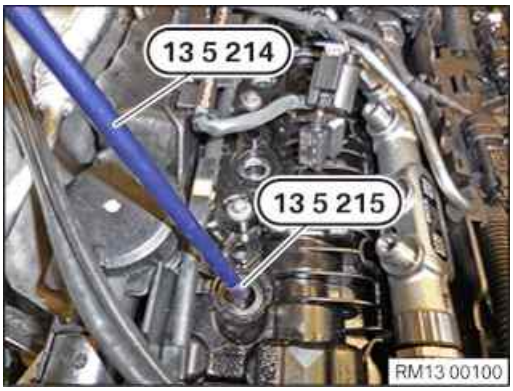

Cleaning injector slots:

Copper sealing ring must not remain in injector slot.

Place sealing cap 13 5 215 with mounting rod 13 5 214 into injector slot. Remove fitting rod.

Place the cleaning tool with brush head 13 5 210 into injector slot.

Attention!

Wear safety goggles and cover injector shaft with cleaning cloth or similar.

Move the brush head up and down in the injector shaft with a rotational movement. After removing the cleaning tool, blow out the injector slot with compressed air.

Remove seal plugs 13 5 215 again with mounting rod 13 5 214 .

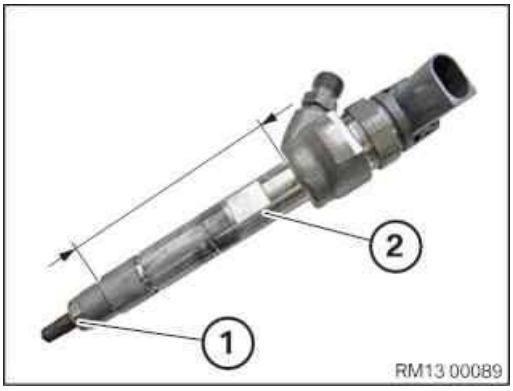

Prepare the injector:

Replace copper sealing ring (1) on injector (2).

Part: Sealing ring

Lightly lubricate injectors with highly heat-resistant grease before installing in injector slot (above copper sealing ring up to injector slot end).

(BMW part number 83 23 0 441 070)

Observe installation position of high-pressure connection.

Installation:

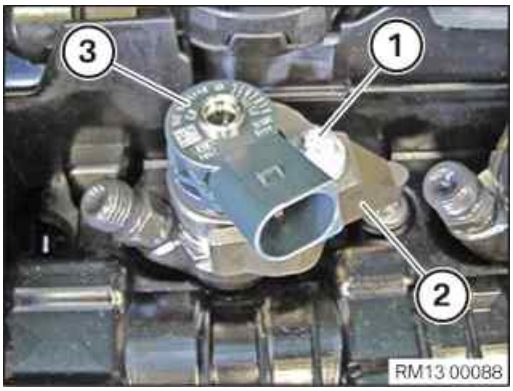

Retighten screw under the clamping claw (2) (cylinder head cover attachment).

Tightening torque 13 53 5AZ.

Install injector (3).

Install clamping claw (2).

Install screw (1).

During assembly, make sure washer is correctly positioned in relation to screw centering in order to align clamping claw. Secure clamping claw in installation position with jointing torque and then tighten.

Tightening torque 13 53 1AZ.

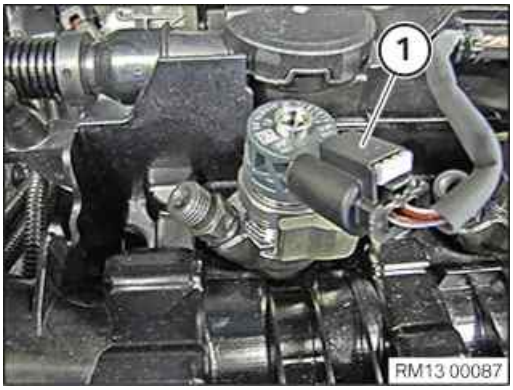

Attach connector (1) to injector.

Connector (1) must engage audibly.

Required follow-up work:

- Connect all leakage oil lines to injectors.
- Install all pressure lines for injectors.
- Remove top bulkhead cover.
- Install strut brace. **(F39, F48)**
- Check fuel system for leak tightness.
- On replacement of injectors, carry out injection quantity compensation

Injection quantity compensation:

The adjustment values must be read off in each case when new injectors are installed.

The adjustment value (7-position letter/number code) is engraved on each injector.

The digits / letters correspond to the installation location (cylinder) of the new injectors.

- Select "DDE".
- Select ”Adjustment, injection quantity compensation”
- Select ”Test plan”
- The adjustment must be entered for each cylinder on which an injector has been replaced.

  It is necessary to adjust the new injectors to ensure their full operability.

13 53 158 Removing and installing/replacing pressure accumulator of fuel injection system (B37)

Special tools required:

- 2 413 106
- 37 1 152

Attention!

When working on the oil, coolant or fuel circuit, you must protect the alternator against contamination.

Cover alternator with suitable materials.

Failure to comply with this procedure may result in an alternator malfunction.

After disconnecting the pressure lines, it is absolutely essential to seal the openings on the injectors, pressure accumulator and high pressure pump with protective caps 2 413 106 .

Recycling:

Catch and dispose of escaping fuel.

Observe country-specific waste disposal regulations.

Necessary preliminary work:

- Disconnect battery negative lead.
- Remove pressure lines to injectors.

Removal:

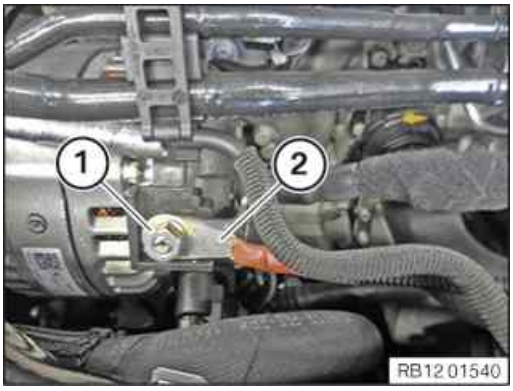

Slacken nut (1).

Release the positive battery cable (2) from the alternator.

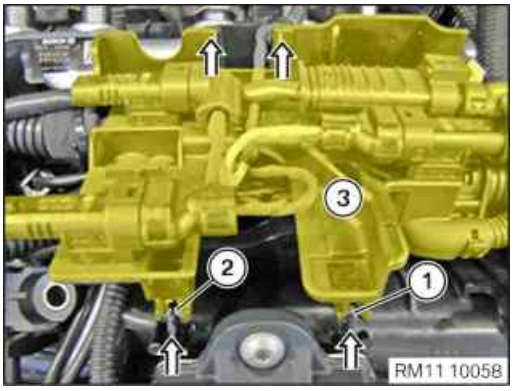

Release clips (1) and (2).

Remove cable clip (3) upwards in direction of arrow and place to one side.

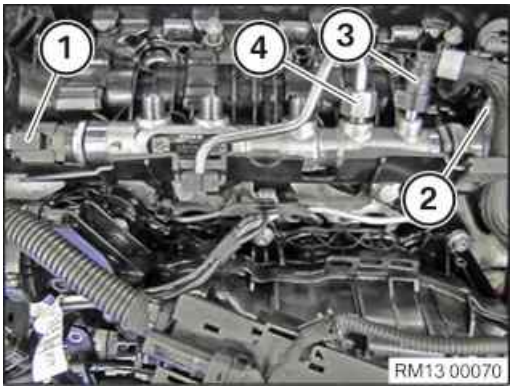

Unlock connector from pressure sensor (1) and detach.

Unlock and pull off connector on pressure regulator (2).

Unlock and pull off fuel return line (3).

Catch and dispose of escaping fuel.

Release pressure line (4) and disconnect from pressure accumulator.

Release bottom pressure line on the high pressure pump using the special tool 37 1 152 .

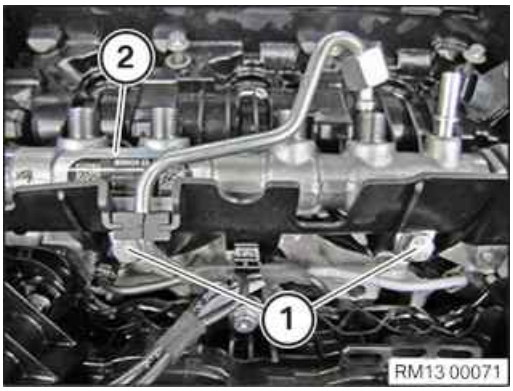

Release screws (1).

Feed out pressure accumulator (2) and remove.

Installation:

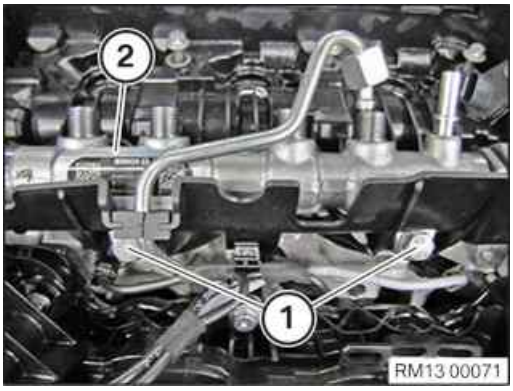

Feed in pressure accumulator (2) and tighten screws (1).

Tightening torque 13 53 6AZ.

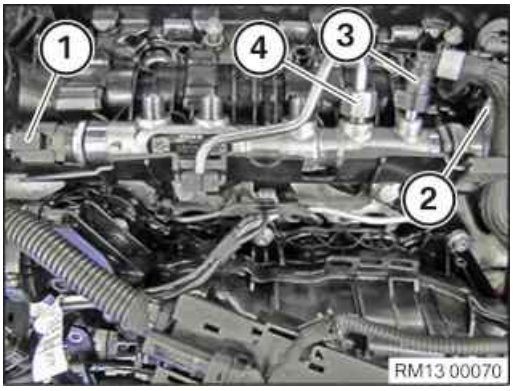

Connect the pressure line (4) with the pressure accumulator and the high pressure pump and tighten hand-tight.

Tighten pressure line (4).

Tightening torque 13 53 2AZ.

Connect fuel return line (3) to pressure accumulator.

Fuel return line (3) must audibly engage.

Attach connector (2) to pressure regulator.

Connector (2) must snap audibly into place.

Attach connector (1) to pressure sensor.

Connector (1) must engage audibly.

Tighten bottom pressure line on the high pressure pump using the special tool 37 1 152 .

Tightening torque 13 53 2AZ.

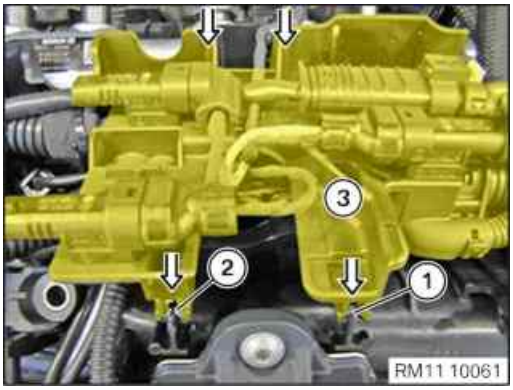

Connect cable clip (3) in direction of arrow.

Clip in the clips (1) and (2).

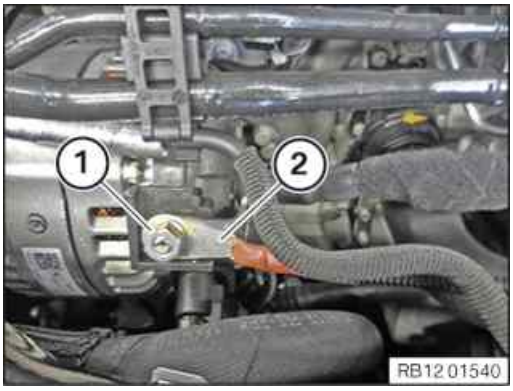

Connect the positive battery cable (2) to the alternator.

Tighten nut (1).

Tightening torque 12 52 2AZ.

Required follow-up work:

- Install pressure lines for injectors.
- Connect battery earth lead.

13 53 170 Removing and installing/replacing pressure lines to the injectors (B37)

Special tools required:

- 32 1 270
- 37 1 152
- 2 413 106

Attention!

Risk of damage to injection system and pressure accumulator!

Observe tightening torque 13 53 2AZ without fail If the pressure lines are leaking after installation, they must be replaced. Do not retighten pressure lines with a higher tightening torque! Risk of damage to injection system and pressure accumulator!

When working on the fuel circuit, you must protect the alternator against dirt contamination.

Cover alternator with suitable materials.

Failure to comply with this procedure may result in an alternator malfunction.

After disconnecting the pressure lines, it is absolutely essential to seal the injectors and the high-pressure accumulator with protective caps.2 413 106

Recycling:

Catch and dispose of escaping fuel.

Observe country-specific waste disposal regulations.

Necessary preliminary tasks:

- Remove resonator

Removal:

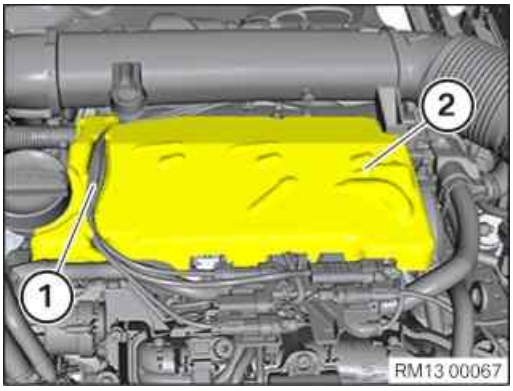

Release cable (1) from sound insulation (2).

Remove sound insulation (2) upwards.

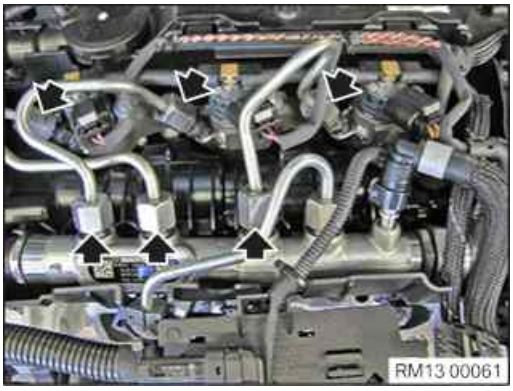

Release all union nuts of the pressure lines with special tool (2) 37 1 152 .**Note:**

Reset special tool in good time to prevent bending of pressure lines.

Installation:

Attention!

Risk of damage to injection system and pressure accumulator!

Observe tightening torque 13 53 2AZ without fail! If the pressure lines are leaking after installation, they must be replaced. Do not retighten pressure lines with a higher tightening torque! Risk of damage to injection system and pressure accumulator!

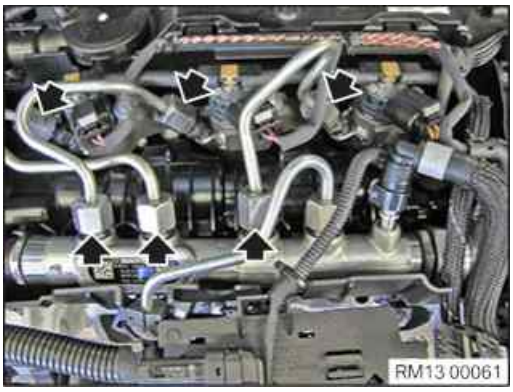

Installing pressure lines.

All pressure lines may only be reused 3 times; after the 3rd time, they must be replaced.

1. Insert pressure lines.
2. Hand-tighten all union nuts on pressure lines.
3. Tighten down union nuts on injectors to specified torque.

   Tightening torque 13 53 2AZ.
4. Tighten down union nuts on pressure accumulator to specified torque.

   Tightening torque 13 53 2AZ.
5. Check all components of the common rail system for tightness.

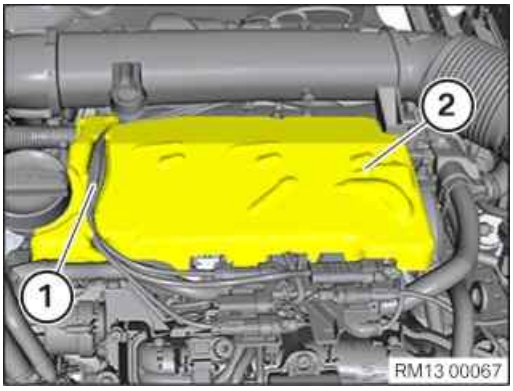

Install sound insulation (2).

Secure cable (1) to sound insulation (2).

Required follow-up work:

- Install resonator
- Check fuel system for leak tightness.

13 53 560 Removing and installing/replacing pressure sensor on pressure accumulator of injection system

PRELIMINARY WORK

1 – Disconnecting all battery earth leads

- See additional information.

2 – Removing the acoustic cover

WARNING

Hot surfaces.

Risk of burning!

- Perform all work only on components that have cooled down.

RISK OF DAMAGE

Damage to the acoustic cover.

Jerky movements during disassembly and excessive application of force during installation may result in breakage of the acoustic cover.

- Disassemble or mount the acoustic cover carefully.
- Disassemble or mount snap-lock couplings of the ball pivots one after the other.
- Disassemble or mount acoustic cover only at temperatures >20 °C.
- Use only distilled water as an auxiliary material during installation, no lubricants.

- Unclip the acoustic cover from the marked areas towards the top.

3 – Remove resonator

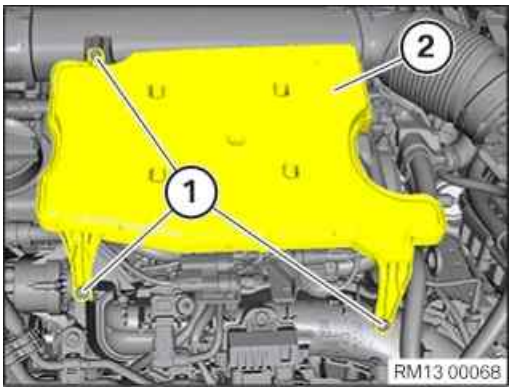

- Loosen screws (1).
- Guide out and remove the resonator (2).

4 – Remove the acoustic cover for the injectors

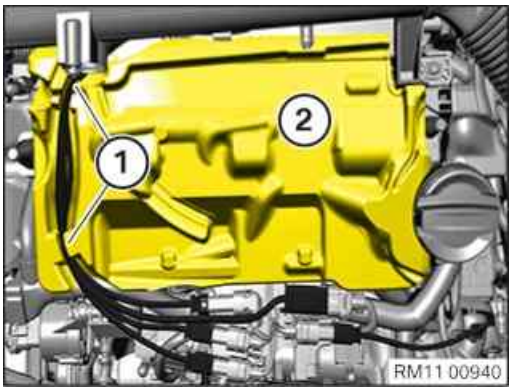

- Release the wiring harness (1) from the brackets.
- Guide the acoustic cover (2) out and remove.

5 – Removing high pressure lines between rail and injectors

WARNING

Hot surfaces.

Risk of burning!

- Perform all work only on components that have cooled down.

WARNING

Working on fuel system.

Risk of fire! Danger of explosion!

- When working on the fuel system, make sure that the workbay is sufficiently ventilated, e.g. using extraction unit.
- Tightly seal off open lines and connections; collect any escaping fuel directly at the point of exit.
- No fire, sparks, open flames or smoking.

CAUTION

On releasing high pressure line, fuel may emerge at high speed.

Danger of injury!

- Wear suitable personal protective equipment.
- Allow the cooling system to cool down to a temperature below 40°C before starting installation work.
- Note warnings on cylinder head cover.

RISK OF DAMAGE

Contaminant or foreign body.

Contamination can result in malfunctions, operating failure or leaks.

- Adhere to the utmost cleanliness.
- Protect components from contamination e.g. by covering.
- Close off line connections with seal plugs.

TECHNICAL INFORMATION

If several high pressure lines are removed, ensure that each high pressure line is re-installed in its original installation location. Mark high pressure lines.

TECHNICAL INFORMATION

Reset special tool in early to avoid bending pressure lines.

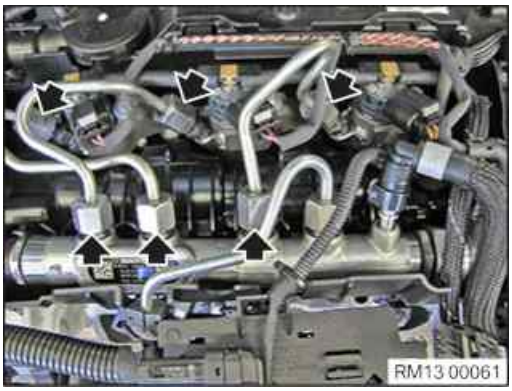

- Release the high pressure lines (arrows) with the special tool **0 495 910 (37 1 152)**.
- Feed out and remove the high pressure lines (arrows).
- Seal off all the open cable connections with the special tool **2 413 106**.

6 – Detach positive battery cable from alternator

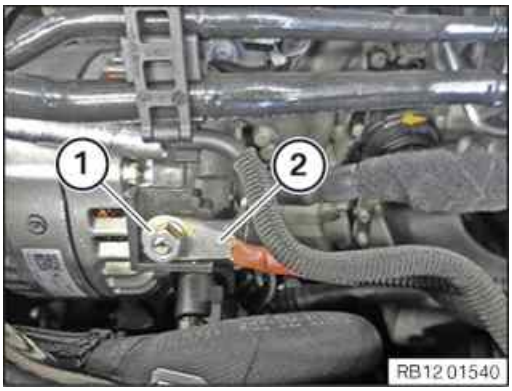

- Unfasten nut (1).
- Feed out the positive battery cable (2) from the alternator and place aside.

7 – Removing the cable clips from the intake plenum

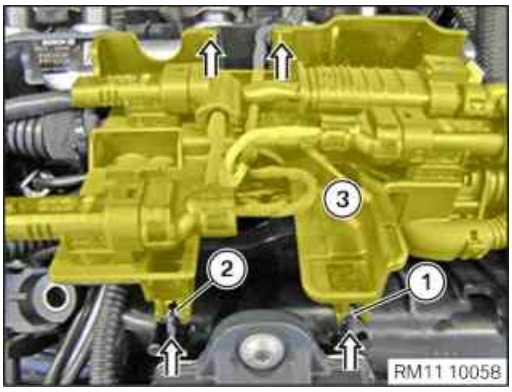

- Release the clips (1) and (2).
- Feed out the cable clip (3) in the direction of the arrow and set it aside.

8 – Remove high-pressure rail

WARNING

Working on fuel system.

Risk of fire! Danger of explosion!

- When working on the fuel system, make sure that the workbay is sufficiently ventilated, e.g. using extraction unit.
- Tightly seal off open lines and connections; collect any escaping fuel directly at the point of exit.
- No fire, sparks, open flames or smoking.

RISK OF DAMAGE

Contaminant or foreign body.

Contamination can result in malfunctions, operating failure or leaks.

- Adhere to the utmost cleanliness.
- Protect components from contamination e.g. by covering.
- Close off line connections with seal plugs.

TECHNICAL INFORMATION

Collect and dispose of emerging fluids. Observe country-specific waste disposal regulations.

TECHNICAL INFORMATION

Reset special tool in early to avoid bending pressure lines.

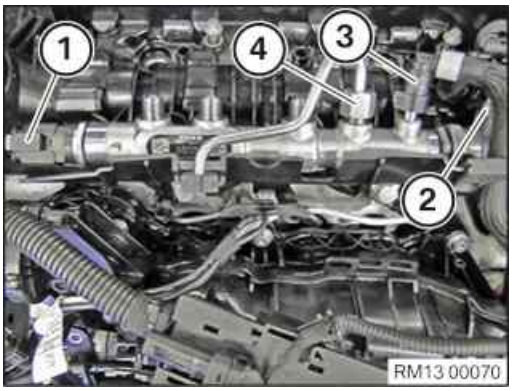

- Unlock and disconnect the plug connection (1).
- Unlock and disconnect the plug connection (2).
- Unlock and release fuel line (3).
- Loosen union nut (4) with special tool **0 495 910 (37 1 152)**.
- Reset special tool **0 495 910 (37 1 152)** early on to avoid bending pressure lines.

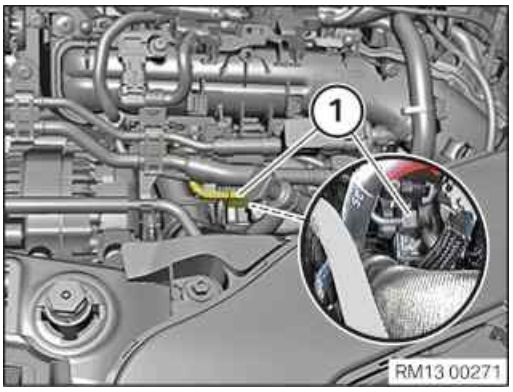

- Slacken the union nut (1) on the high pressure pump.

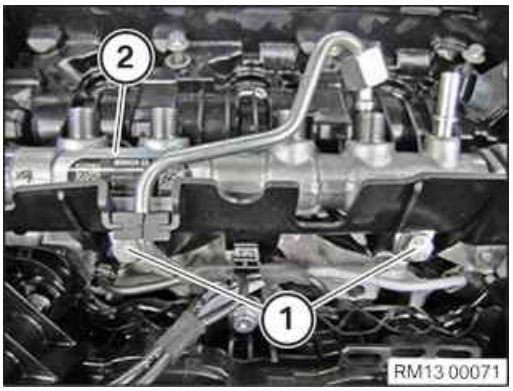

- Loosen screws (1).
- Carefully thread out and remove the rail (2).
- Make sure the pressure line of the high pressure pump is not bent.

MAIN WORK

9 – Remove the rail pressure sensor on the rail

WARNING

Working on fuel system.

Risk of fire! Danger of explosion!

- When working on the fuel system, make sure that the workbay is sufficiently ventilated, e.g. using extraction unit.
- Tightly seal off open lines and connections; collect any escaping fuel directly at the point of exit.
- No fire, sparks, open flames or smoking.

RISK OF DAMAGE

Electrostatic discharge.

Damage to or destruction of electrical components.

- Leave electrical components in original packaging until just before they are installed. Use the original packaging only for any return shipments. Always package removed components straight away.
- Read and comply with user information on using the associated special tool 12 7 060.
- Only touch the housings of electrical components. Do not touch pins or multi-pin connectors directly.
- Wear electrically conductive clothing and antistatic shoes (with ESD symbol).
- For additional information see: 61 35 Information on electrostatic discharge (ESD) protection.

RISK OF DAMAGE

Contaminant or foreign body.

Contamination can result in malfunctions, operating failure or leaks.

- Adhere to the utmost cleanliness.
- Protect components from contamination e.g. by covering.
- Close off line connections with seal plugs.

TECHNICAL INFORMATION

Collect and dispose of emerging fluids. Observe country-specific waste disposal regulations.

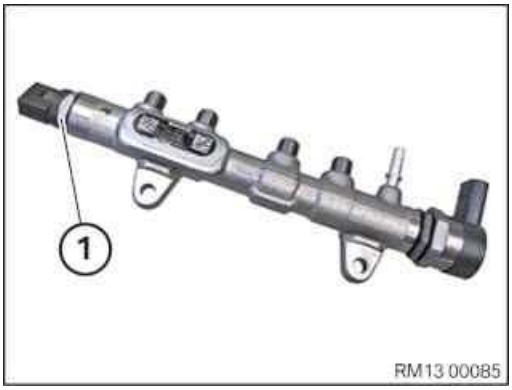

- Grip the removed rail on the flattened area.
- While removing the rail pressure sensor (1), hold the rail for counter support.
- Loosen the rail pressure sensor (1) and remove.
- Catch and dispose of escaping fuel.

10 – Install the rail pressure sensor on the rail

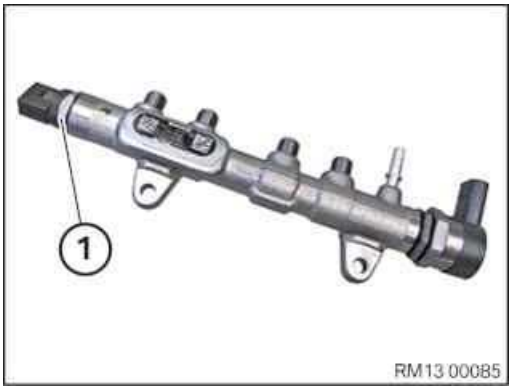

- Check the thread and sealing surface of the rail pressure sensor (1) for damage and renew the rail pressure sensor where required.
- Check the thread and sealing surface of the rail (2) for damage and renew the rail where required.
- Lightly grease the thread on the rail pressure sensor (1).
- Screw in the rail pressure sensor (1) by hand.
- Hold the rail for counter support and tighten the rail pressure sensor (1).

Rail pressure sensor to rail

	Grease thread lightly.	70 Nm

POSTPROCESSES

11 – Installing the rail

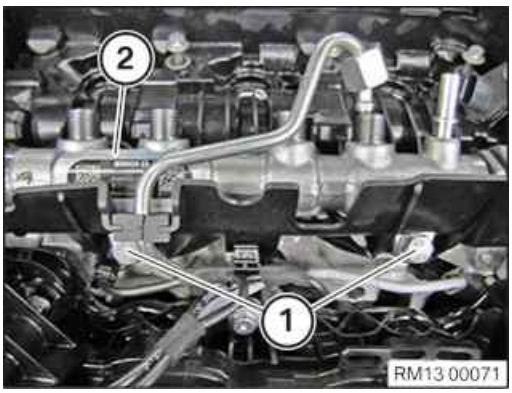

- Carefully insert and install the rail (2).
- Tighten the screws (1).

Rail on cylinder head cover

Torx screw M8x25		Tightening torque	19 Nm

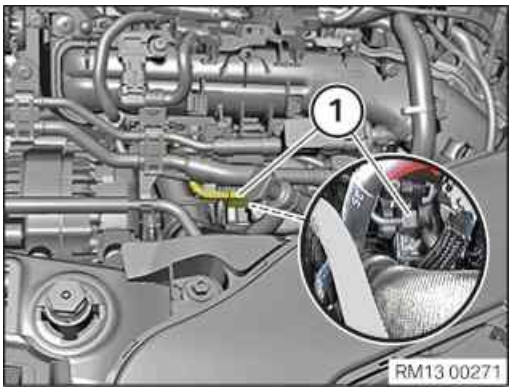

TECHNICAL INFORMATION

Renew high pressure lines when the tightening torque exceeds the maximum of 30 Nm.

- Tighten union nut (1).

High pressure line between high pressure pump and rail

High-pressure pipe		Tightening torque	28 Nm

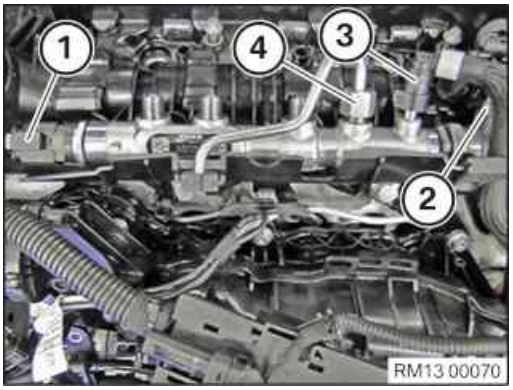

TECHNICAL INFORMATION

Renew high pressure lines when the tightening torque exceeds the maximum of 30 Nm.

TECHNICAL INFORMATION

Reset special tool in early to avoid bending pressure lines.

- Tighten union nut (4) with special tool **0 495 910 (37 1 152)**.

High pressure line between high pressure pump and rail

High-pressure pipe		Tightening torque	28 Nm

- Connect and lock fuel line (3).

  Fuel line (3) must engage audibly.
- Connect and lock the connector (2).

  The connector (2) must engage audibly.
- Connect and lock the connector (1).

  The connector (1) must engage audibly.

12 – Installing the cable clip for the intake plenum

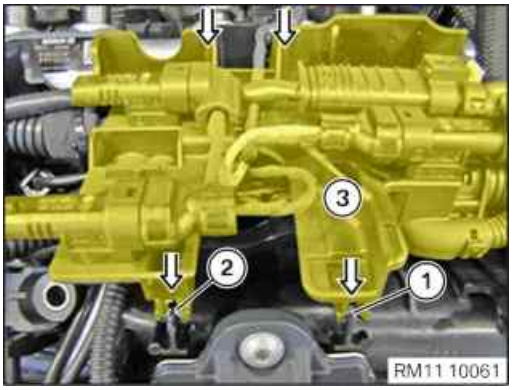

- Feed in and install the cable clip (3) in the direction of arrow.
- Engage clips (1) and (2).

13 – Fasten the positive battery cable on the alternator

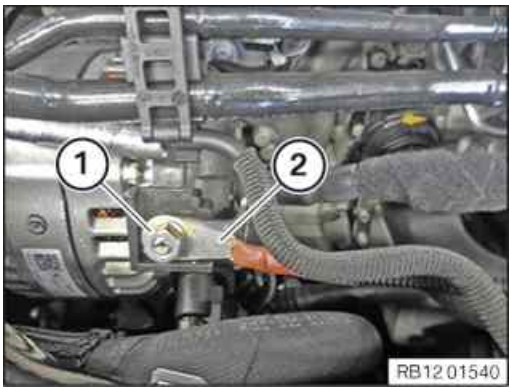

- Insert and install the positive battery cable (2) at the alternator.
- Tighten nut (1).

Positive battery cable to alternator

M8		Tightening torque	19 Nm

14 – Installing high pressure lines between rail and injectors

TECHNICAL INFORMATION

If several high pressure lines are removed, ensure that each high pressure line is re-installed in its original installation location. Mark high pressure lines.

TECHNICAL INFORMATION

Reset special tool in early to avoid bending pressure lines.

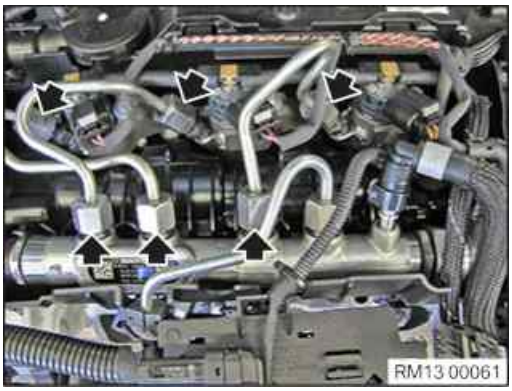

- Remove special tool **2 413 106**.
- Feed in and install the high pressure lines (arrows).
- Hand-tighten the high pressure lines (arrows).

TECHNICAL INFORMATION

Renew high pressure lines when the tightening torque exceeds the maximum of 30 Nm.

- Tighten the high pressure lines (arrows) with the special tool **0 495 910 (37 1 152)**.

High pressure lines between injector and rail

High pressure lines		Tightening torque	28 Nm

- Check the high pressure lines for tightness (**visual inspection**).

15 – Install the acoustic cover for the injectors

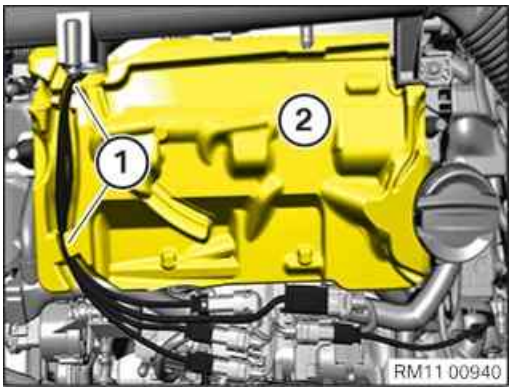

- Feed the acoustic cover (2) in and install.
- Fasten the wiring harness (1) to the brackets.

16 – Install resonator

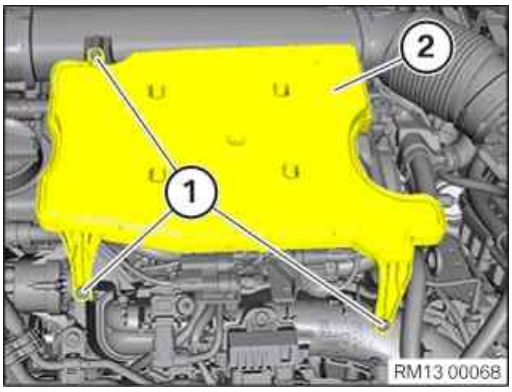

- Insert and install the resonator (2).
- Renew screws (1).

  Parts: Bolts
- Tighten the screws (1).

Resonator to manifold and clean air pipe

Screw TS6	Renew screw.	Tightening torque	5 Nm

17 – Install acoustic cover

RISK OF DAMAGE

Damage to the acoustic cover.

Jerky movements during disassembly and excessive application of force during installation may result in breakage of the acoustic cover.

- Disassemble or mount the acoustic cover carefully.
- Disassemble or mount snap-lock couplings of the ball pivots one after the other.
- Disassemble or mount acoustic cover only at temperatures >20 °C.
- Use only distilled water as an auxiliary material during installation, no lubricants.

- Check for correct installation of all rubber mounts in the acoustic cover (1).

- Clip in the acoustic cover into the holders in the indicated areas.
- Make sure that the acoustic cover engages audibly.

18 – Disconnecting all battery earth leads

- See additional information.

Additional Information

Overview of Tightening Torques

Rail pressure sensor to rail — Used in step 10

		Grease thread lightly.	70 Nm

Rail on cylinder head cover — Used in step 11

Torx screw M8x25		Tightening torque	19 Nm

High pressure line between high pressure pump and rail — Used in step 11

High-pressure pipe		Tightening torque	28 Nm

Positive battery cable to alternator — Used in step 13

M8		Tightening torque	19 Nm

High pressure lines between injector and rail — Used in step 14

High pressure lines		Tightening torque	28 Nm

Resonator to manifold and clean air pipe — Used in step 16

Screw TS6	Renew screw.	Tightening torque	5 Nm

Overview of Special Tools

0 495 910 (37 1 152) Socket wrench

Common — Used in step 5 8 11 14

Usage	(Socket wrench)SW19
Included in the tool or work	0 495 908
Storage location	B21
Replaced by	
In connection with	
SI-Number	01 01 07 (333)

2 413 106 Fastener

Common	Used in step 5 14
Usage	For avoiding contamination and damage of rail, injectors and high pressure pump.
Included in the tool or work	
Storage location	Individual
Replaced by	
In connection with	
SI-Number	01 16 16 (419)

Links

Repair instructions	Used in step
61 20 900 Disconnecting and connecting battery earth lead	1 18
61 20 900 Disconnecting and connecting battery earth lead	1 18
61 20 900 Disconnecting and connecting battery earth lead	1 18
61 20 900 Disconnecting and connecting battery earth lead	1 18
61 20 900 Disconnecting and connecting battery earth lead	1 18
61 20 900 Disconnecting and connecting battery earth lead	1 18
61 20 900 Disconnecting and connecting the battery earth lead (all battery earth leads)	1 18
61 20 900 Disconnecting and connecting the battery earth lead (all battery earth leads)	1 18
61 20 900 Disconnecting and connecting battery earth lead	1 18
61 20 900 Disconnecting and connecting the battery earth lead (all battery earth leads)	1 18
61 20 900 Disconnect and connect battery earth lead (Plug-in Hybrid Electric Vehicle)	1 18
61 20 900 Disconnecting and connecting battery earth lead	1 18
61 20 900 Disconnecting and connecting battery earth lead	1 18
61 20 900 Disconnecting and connecting battery earth lead	1 18
61 20 900 Disconnecting and connecting battery earth lead	1 18
61 20 900 Disconnecting and connecting battery earth lead	1 18
61 20 900 Disconnecting and connecting battery earth lead	1 18
61 20 900 Disconnecting and connecting battery earth lead	1 18
61 20 900 Disconnecting and connecting battery earth lead	1 18
61 20 900 Disconnecting and connecting battery earth lead	1 18
61 20 900 Disconnecting and connecting battery earth lead	1 18
61 20 900 Disconnecting and connecting the battery earth lead (all battery earth leads)	1 18

13 53 560 Removing and installing/replacing pressure sensor on pressure accumulator of injection system (B37)

Recycling:

Catch and dispose of escaping fuel.

Observe country-specific waste disposal regulations.

Necessary preliminary tasks:

- Remove pressure accumulator.

Removal:

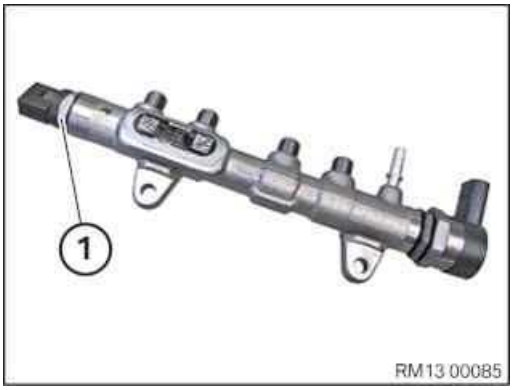

Grip removed pressure accumulator at flattened area.

Grip at pressure accumulator when removing pressure sensor (1).

Release pressure sensor (1) and remove.

Preparation for installation:

Check threads and sealing surfaces for damages prior to installing the pressure sensor. Ensure conditions of cleanliness when installing pressure sensor. Lightly grease thread on pressure sensor.

Installation:

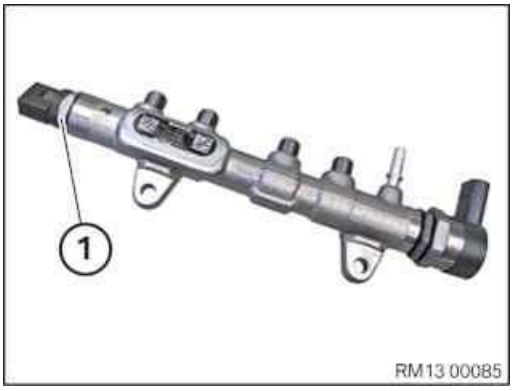

Screw in pressure sensor (1) by hand. Then apply the pressure sensor with a tool.

Tightening torque 13 53 3AZ.

Required follow-up work:

- Install pressure accumulator

13 53 158 Removing and installing/replacing rail

PRELIMINARY WORK

1 – Disconnecting all battery earth leads

- See additional information.

2 – Removing the acoustic cover

WARNING

Hot surfaces.

Risk of burning!

- Perform all work only on components that have cooled down.

RISK OF DAMAGE

Damage to the acoustic cover.

Jerky movements during disassembly and excessive application of force during installation may result in breakage of the acoustic cover.

- Disassemble or mount the acoustic cover carefully.
- Disassemble or mount snap-lock couplings of the ball pivots one after the other.
- Disassemble or mount acoustic cover only at temperatures >20 °C.
- Use only distilled water as an auxiliary material during installation, no lubricants.

- Unclip the acoustic cover from the marked areas towards the top.

3 – Remove resonator

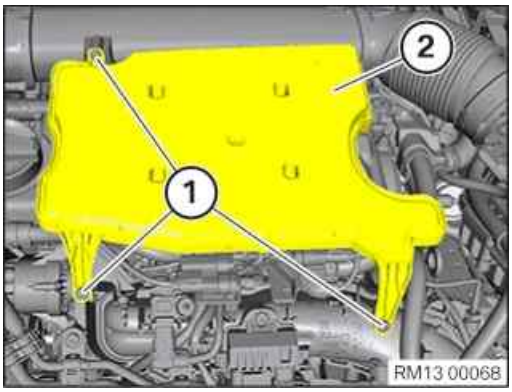

- Loosen screws (1).
- Guide out and remove the resonator (2).

4 – Remove the acoustic cover for the injectors

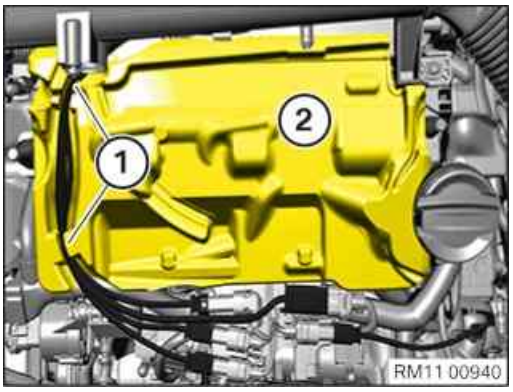

- Release the wiring harness (1) from the brackets.
- Guide the acoustic cover (2) out and remove.

5 – Removing high pressure lines between rail and injectors

WARNING

Hot surfaces.

Risk of burning!

- Perform all work only on components that have cooled down.

WARNING

Working on fuel system.

Risk of fire! Danger of explosion!

- When working on the fuel system, make sure that the workbay is sufficiently ventilated, e.g. using extraction unit.
- Tightly seal off open lines and connections; collect any escaping fuel directly at the point of exit.
- No fire, sparks, open flames or smoking.

CAUTION

On releasing high pressure line, fuel may emerge at high speed.

Danger of injury!

- Wear suitable personal protective equipment.
- Allow the cooling system to cool down to a temperature below 40°C before starting installation work.
- Note warnings on cylinder head cover.

RISK OF DAMAGE

Contaminant or foreign body.

Contamination can result in malfunctions, operating failure or leaks.

- Adhere to the utmost cleanliness.
- Protect components from contamination e.g. by covering.
- Close off line connections with seal plugs.

TECHNICAL INFORMATION

If several high pressure lines are removed, ensure that each high pressure line is re-installed in its original installation location. Mark high pressure lines.

TECHNICAL INFORMATION

Reset special tool in early to avoid bending pressure lines.

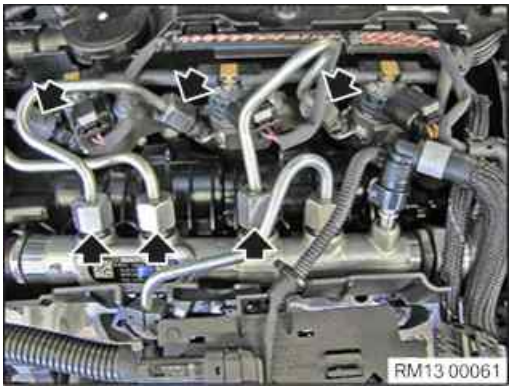

- Release the high pressure lines (arrows) with the special tool **0 495 910 (37 1 152)**.
- Feed out and remove the high pressure lines (arrows).
- Seal off all the open cable connections with the special tool **2 413 106**.

6 – Detach positive battery cable from alternator

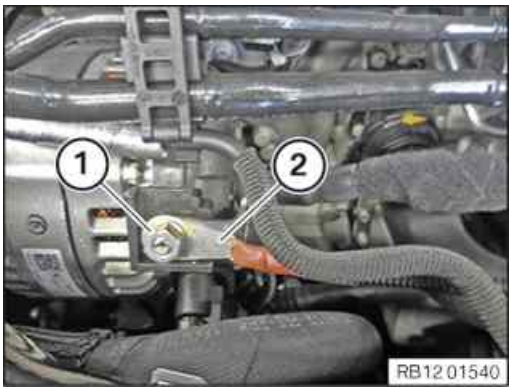

- Unfasten nut (1).
- Feed out the positive battery cable (2) from the alternator and place aside.

7 – Removing the cable clips from the intake plenum

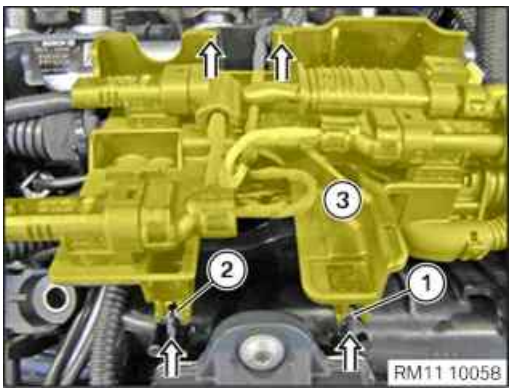

- Release the clips (1) and (2).
- Feed out the cable clip (3) in the direction of the arrow and set it aside.

MAIN WORK

8 – Remove high-pressure rail

WARNING

Working on fuel system.

Risk of fire! Danger of explosion!

- When working on the fuel system, make sure that the workbay is sufficiently ventilated, e.g. using extraction unit.
- Tightly seal off open lines and connections; collect any escaping fuel directly at the point of exit.
- No fire, sparks, open flames or smoking.

RISK OF DAMAGE

Contaminant or foreign body.

Contamination can result in malfunctions, operating failure or leaks.

- Adhere to the utmost cleanliness.
- Protect components from contamination e.g. by covering.
- Close off line connections with seal plugs.

TECHNICAL INFORMATION

Collect and dispose of emerging fluids. Observe country-specific waste disposal regulations.

TECHNICAL INFORMATION

Reset special tool in early to avoid bending pressure lines.

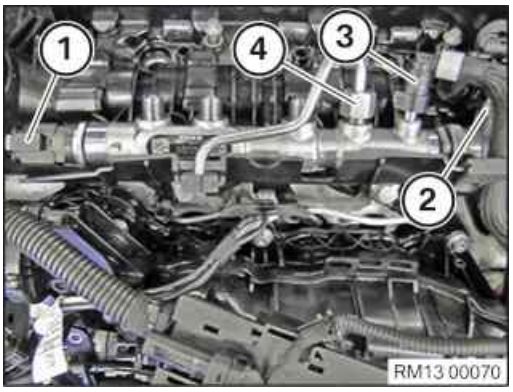

- Unlock and disconnect the plug connection (1).
- Unlock and disconnect the plug connection (2).
- Unlock and release fuel line (3).
- Loosen union nut (4) with special tool **0 495 910 (37 1 152)**.
- Reset special tool **0 495 910 (37 1 152)** early on to avoid bending pressure lines.

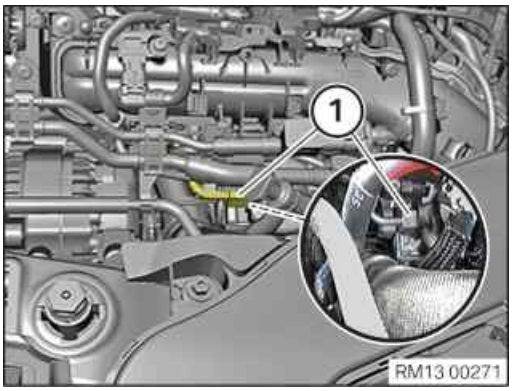

- Slacken the union nut (1) on the high pressure pump.

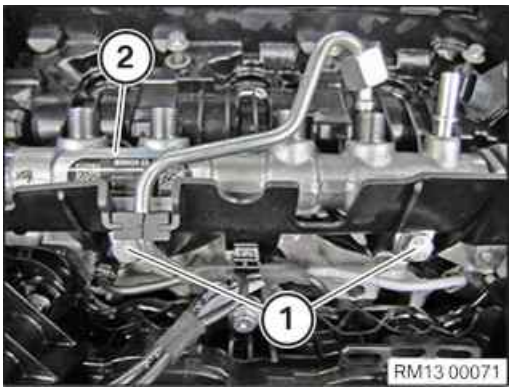

- Loosen screws (1).
- Carefully thread out and remove the rail (2).
- Make sure the pressure line of the high pressure pump is not bent.

9 – Installing the rail

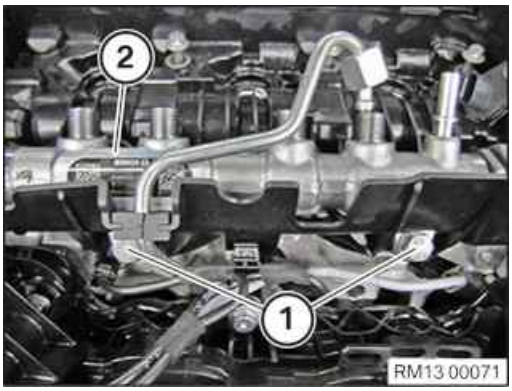

- Carefully insert and install the rail (2).
- Tighten the screws (1).

Rail on cylinder head cover

Torx screw M8x25		Tightening torque	19 Nm

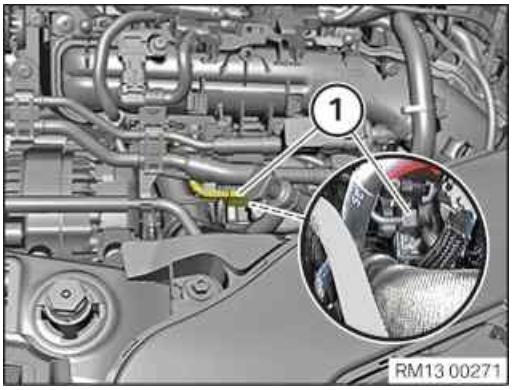

TECHNICAL INFORMATION

Renew high pressure lines when the tightening torque exceeds the maximum of 30 Nm.

- Tighten union nut (1).

High pressure line between high pressure pump and rail

High-pressure pipe		Tightening torque	28 Nm

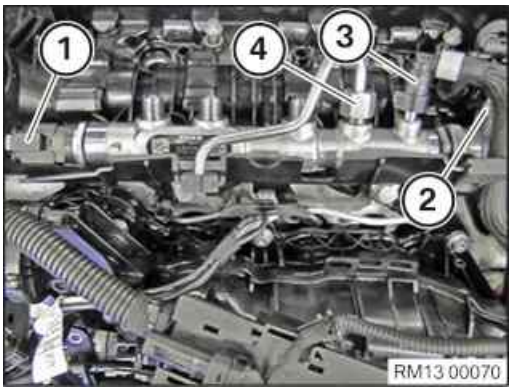

TECHNICAL INFORMATION

Renew high pressure lines when the tightening torque exceeds the maximum of 30 Nm.

TECHNICAL INFORMATION

Reset special tool in early to avoid bending pressure lines.

- Tighten union nut (4) with special tool **0 495 910 (37 1 152)**.

High pressure line between high pressure pump and rail

High-pressure pipe		Tightening torque	28 Nm

- Connect and lock fuel line (3).

  Fuel line (3) must engage audibly.
- Connect and lock the connector (2).

  The connector (2) must engage audibly.
- Connect and lock the connector (1).

  The connector (1) must engage audibly.

POSTPROCESSES

10 – Installing the cable clip for the intake plenum

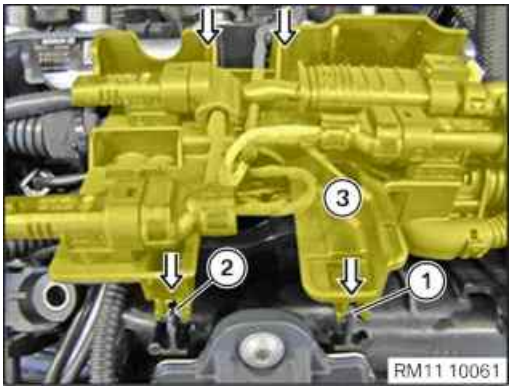

- Feed in and install the cable clip (3) in the direction of arrow.
- Engage clips (1) and (2).

11 – Fasten the positive battery cable on the alternator

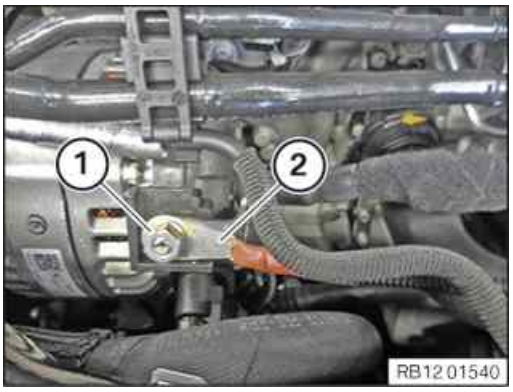

- Insert and install the positive battery cable (2) at the alternator.
- Tighten nut (1).

Positive battery cable to alternator

M8		Tightening torque	19 Nm

12 – Installing high pressure lines between rail and injectors

TECHNICAL INFORMATION

If several high pressure lines are removed, ensure that each high pressure line is re-installed in its original installation location. Mark high pressure lines.

TECHNICAL INFORMATION

Reset special tool in early to avoid bending pressure lines.

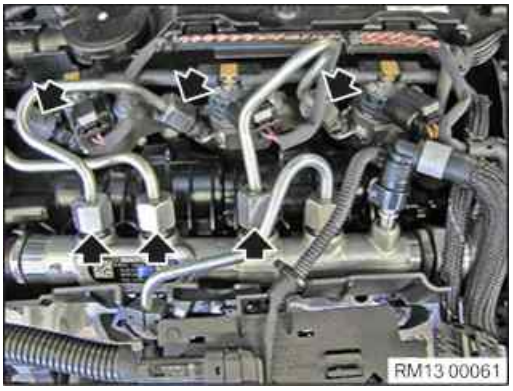

- Remove special tool **2 413 106**.
- Feed in and install the high pressure lines (arrows).
- Hand-tighten the high pressure lines (arrows).

TECHNICAL INFORMATION

Renew high pressure lines when the tightening torque exceeds the maximum of 30 Nm.

- Tighten the high pressure lines (arrows) with the special tool **0 495 910 (37 1 152)**.

High pressure lines between injector and rail

High pressure lines		Tightening torque	28 Nm

- Check the high pressure lines for tightness (**visual inspection**).

13 – Install the acoustic cover for the injectors

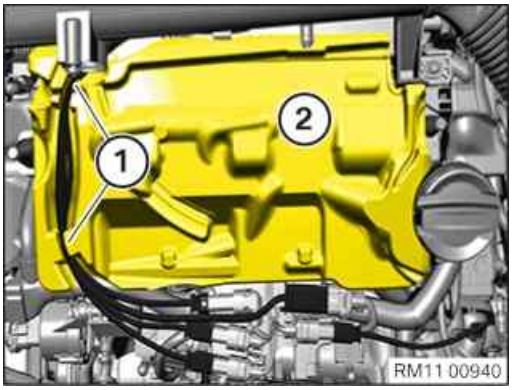

- Feed the acoustic cover (2) in and install.
- Fasten the wiring harness (1) to the brackets.

14 – Install resonator

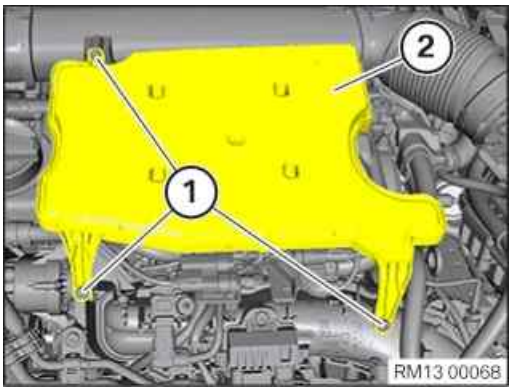

- Insert and install the resonator (2).
- Renew screws (1).

  Parts: Bolts

- Tighten the screws (1).

Resonator to manifold and clean air pipe

Screw TS6	Renew screw.	Tightening torque	5 Nm

15 – Install acoustic cover

RISK OF DAMAGE

Damage to the acoustic cover.

Jerky movements during disassembly and excessive application of force during installation may result in breakage of the acoustic cover.

- Disassemble or mount the acoustic cover carefully.
- Disassemble or mount snap-lock couplings of the ball pivots one after the other.
- Disassemble or mount acoustic cover only at temperatures >20 °C.
- Use only distilled water as an auxiliary material during installation, no lubricants.

- Check for correct installation of all rubber mounts in the acoustic cover (1).

- Clip in the acoustic cover into the holders in the indicated areas.
- Make sure that the acoustic cover engages audibly.

16 – Disconnecting all battery earth leads

- See additional information.

Additional Information

Overview of Tightening Torques

Rail on cylinder head cover Used in step 9

Torx screw M8x25		Tightening torque	19 Nm

High pressure line between high pressure pump and rail			Used in step 9
High-pressure pipe		Tightening torque	28 Nm

Positive battery cable to alternator			Used in step 11
M8		Tightening torque	19 Nm

High pressure lines between injector and rail			Used in step 12
High pressure lines		Tightening torque	28 Nm

Resonator to manifold and clean air pipe			Used in step 14
Screw TS6	Renew screw.	Tightening torque	5 Nm

Overview of Special Tools

0 495 910 (37 1 152) Socket wrench

Common		Used in step 5 8 9 12
Usage	(Socket wrench)SW19	
Included in the tool or work	0 495 908	
Storage location	B21	
Replaced by		
In connection with		
SI-Number	01 01 07 (333)	

2 413 106 Fastener

Common		Used in step 5 12
Usage	For avoiding contamination and damage of rail, injectors and high pressure pump.	
Included in the tool or work		
Storage location	Individual	
Replaced by		
In connection with		
SI-Number	01 16 16 (419)	

Links

Repair instructions	Used in step
61 20 900 Disconnecting and connecting battery earth lead	1 16
61 20 900 Disconnecting and connecting battery earth lead	1 16
61 20 900 Disconnecting and connecting battery earth lead	1 16
61 20 900 Disconnecting and connecting battery earth lead	1 16
61 20 900 Disconnecting and connecting battery earth lead	1 16
61 20 900 Disconnecting and connecting battery earth lead	1 16
61 20 900 Disconnecting and connecting the battery earth lead (all battery earth leads)	1 16
61 20 900 Disconnecting and connecting the battery earth lead (all battery earth leads)	1 16
61 20 900 Disconnecting and connecting battery earth lead	1 16

13 53 180 Replace pressure line

WARNING

Hot surfaces.

Risk of burning!

- Perform all work only on components that have cooled down.

PRELIMINARY WORK

1 – Disconnecting all battery earth leads

- See additional information.

2 – Remove the seal for the rear bonnet

NOTICE

Schematic diagram is for example purposes. Some parts may differ in certain details.

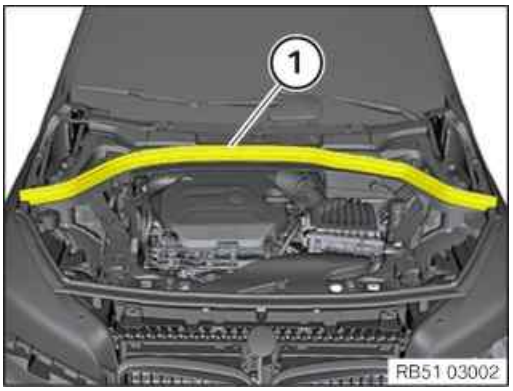

- Pull off rear bonnet seal (1) towards the top and remove.

3 – Removing front cowl panel cover

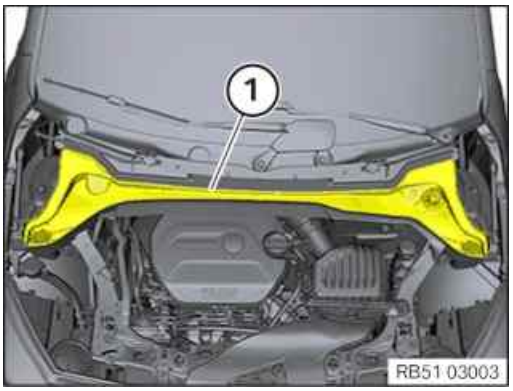

- Guide the front cowl panel cover (1) out toward the top and remove it.

4 – Remove left and right wiper arm

NOTICE

Description is for left component only. Procedure on the right side is identical.

▸ **Remove the wiper arm**

RISK OF DAMAGE

Damage to wiper console

While removing the wiper arms without using special tool, the wiper console can break.

- Removing the wiper arms must be carried out only using the prescribed special tool.
- Do not lift off wiper arm, else the wiper console may break on the predetermined breaking point for the pedestrian protection.

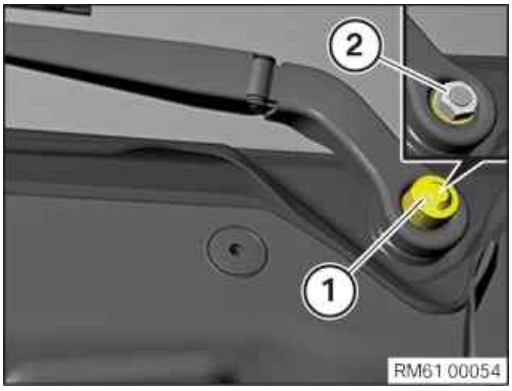

- Remove the protective cap (1).
- Loosen nut (2).

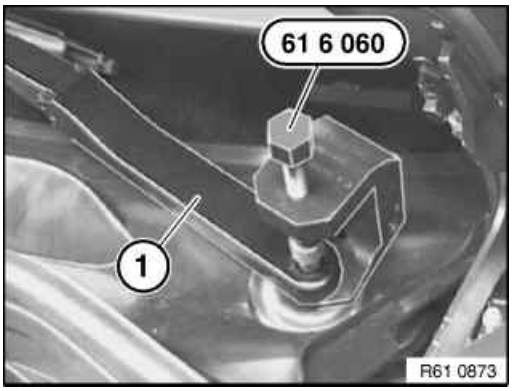

- Pull off the wiper arm (1) using special tool .

5 – Remove the gutter strip on the windscreen on the left and right

NOTICE

Description is for left component only. Procedure on the right side is identical.

▸ **Remove the gutter strip on the windscreen**

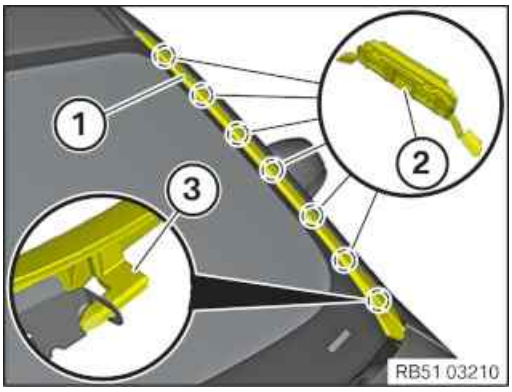

- Unclip the gutter strip (1) from the clips (2) beginning at the roof to the top.
- Feed the gutter strip (1) out of the guide (3).

6 – Remove the rear cowl panel cover

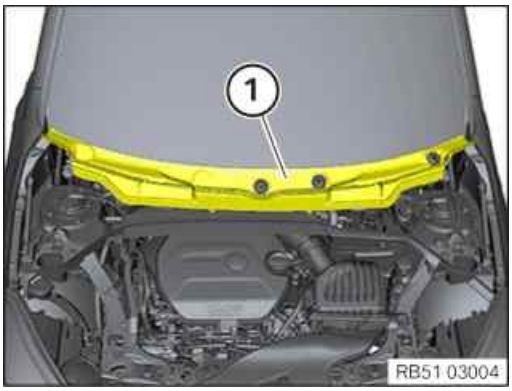

- Disengage and guide out the rear cowl panel cover (1) towards the top.

7 – Removing the upper bulkhead cover

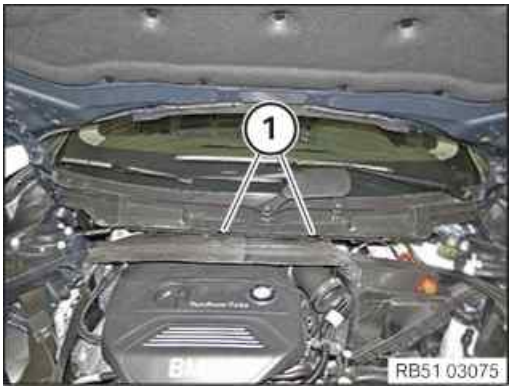

- Loosen screws (1).

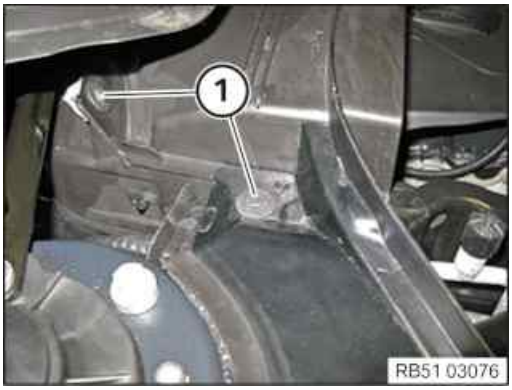

- Loosen screws (1).

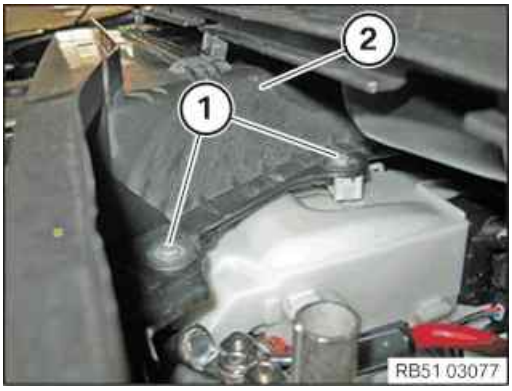

- Loosen screws (1).
- Feed out and remove the upper bulkhead cover (2).

8 – Removing the acoustic cover

WARNING

Hot surfaces.

Risk of burning!

- Perform all work only on components that have cooled down.

RISK OF DAMAGE

Damage to the acoustic cover.

Jerky movements during disassembly and excessive application of force during installation may result in breakage of the acoustic cover.

- Disassemble or mount the acoustic cover carefully.
- Disassemble or mount snap-lock couplings of the ball pivots one after the other.
- Disassemble or mount acoustic cover only at temperatures >20 °C.
- Use only distilled water as an auxiliary material during installation, no lubricants.

- Unclip the acoustic cover from the marked areas towards the top.

9 – Remove resonator

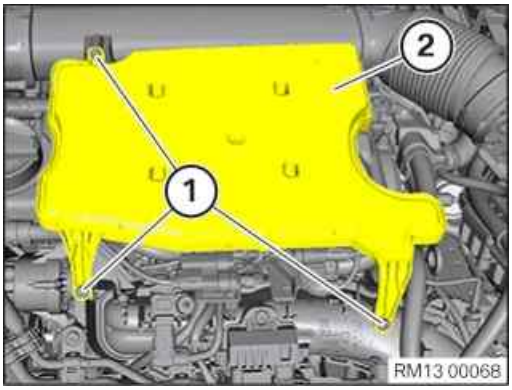

- Loosen screws (1).
- Guide out and remove the resonator (2).

10 – Remove the acoustic cover for the injectors

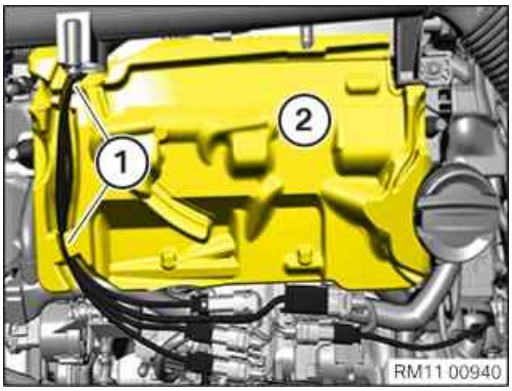

- Release the wiring harness (1) from the brackets.
- Guide the acoustic cover (2) out and remove.

11 – Remove the intake neck for intake silencer housing

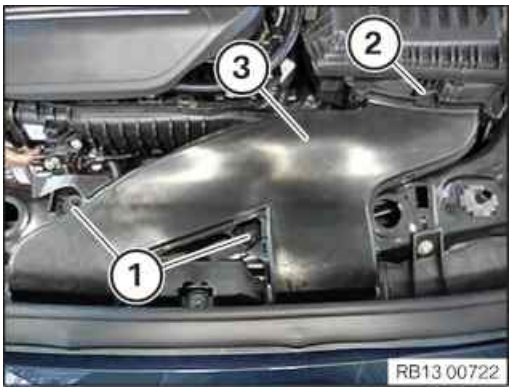

- Loosen nuts (1).
- Loosen the lock (2).
- Guide the intake neck (3) out and remove it.

12 – Removing intake silencer housing

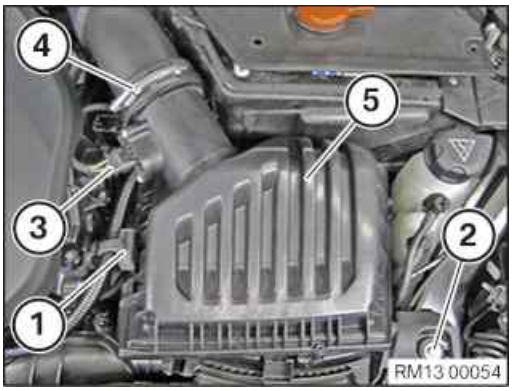

- Loosen the holder (1).
- Loosen screw (2).
- Unlock and loosen connector (3).
- Unfasten clamp (4).
- Pull out and remove the intake silencer housing (5) from the rubber mounts towards the top.

13 – Removing the front underbody protection

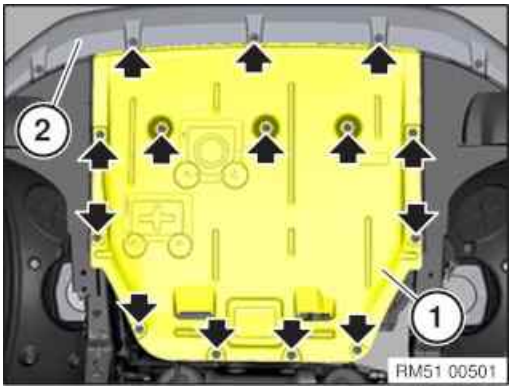

- Remove screws (arrows).
- Pull out and remove front underbody protection (1) under the bumper panel (2).

14 – Partially detach the clean air pipe

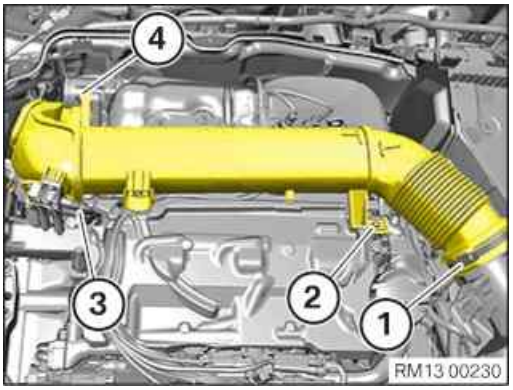

- Release the screw clamp (1).
- Loosen screw (2).
- Unlock and loosen connector (3).
- Loosen screw (4).

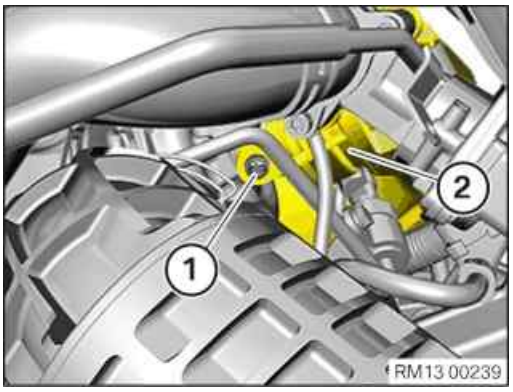

- Unscrew the screw (1) from the clean air pipe (2).

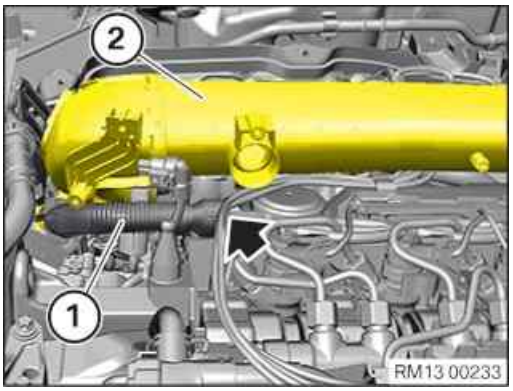

- Detach ventilation line (1) from clean air pipe (2) and set it aside.
- Detach ventilation line (1) from cylinder head cover (arrow).
- Remove the ventilation line (1).

- Thread out the clean air pipe (1) and set it aside as shown.

15 – Releasing the wiring harness section for the intake plenum

Overview: Wiring harness section for the engine

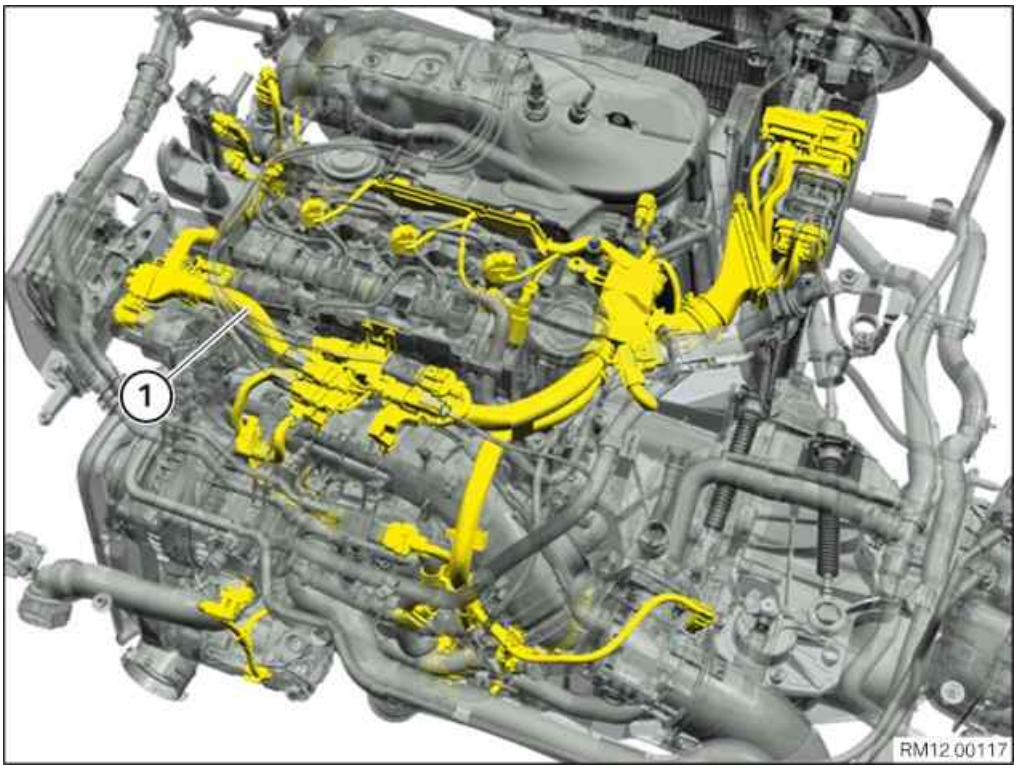

1 Wiring harness section for the engine

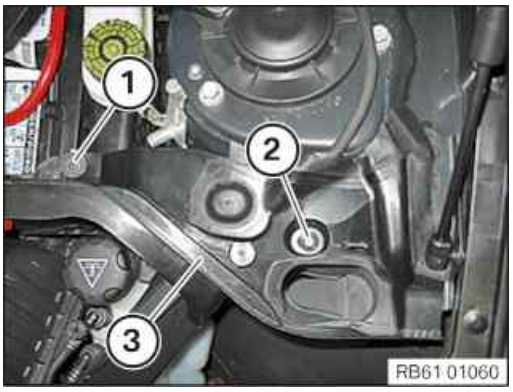

- Release the screw (1) and the expanding rivet (2).
- Remove the fixture for the gasket (3).

- Loosen screw (1).
- Place cover (2) of the positive battery connection point to one side.

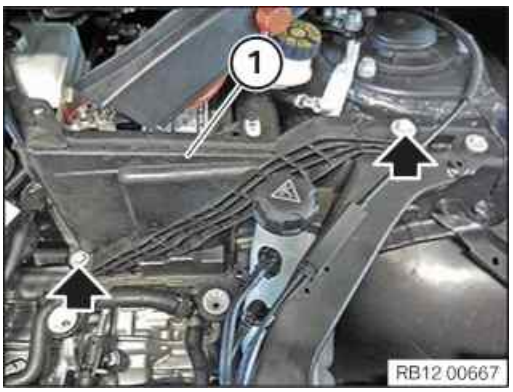

- Remove screws (arrows).
- Guide out tension strut (1) and remove.

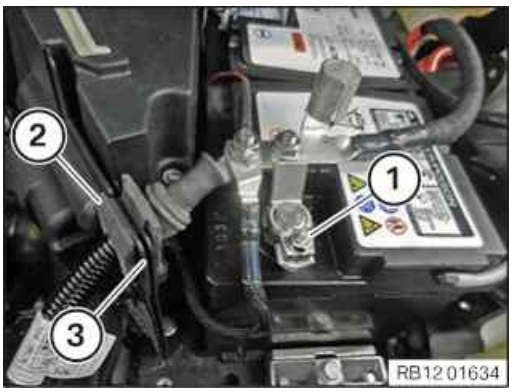

- Undo positive battery terminal (1).
- Feed out positive battery terminal (1) and set aside.
- Guide the positive battery cable (2) out of the holder (3) and lay to one side.

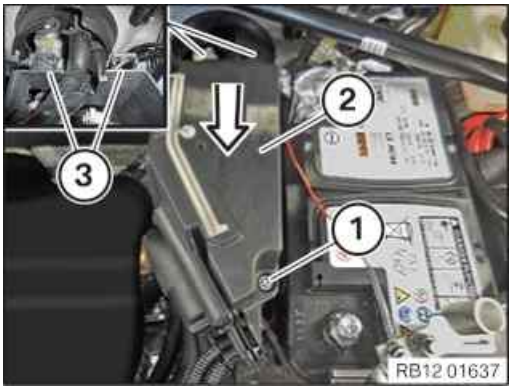

- Loosen screw (1).
- Unlock cover (2) and feed out and remove from the guides (3) in the direction of arrow.

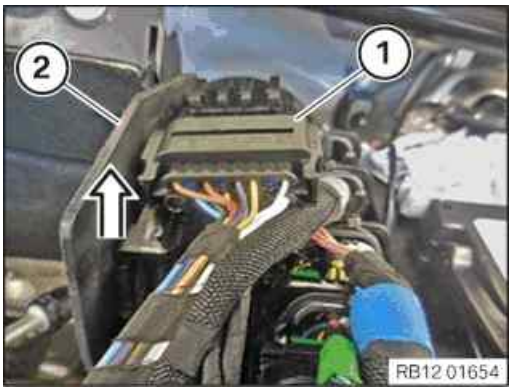

- Guide the connector (1)out of the electronics box (2) in the direction of arrow and remove it.
- Unlock and loosen connector (1).

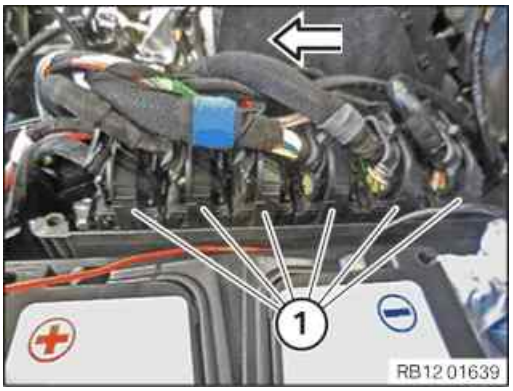

- Unlock and remove the connector (1) in the direction of the arrow.
- Feed out connector (1) and place to one side.

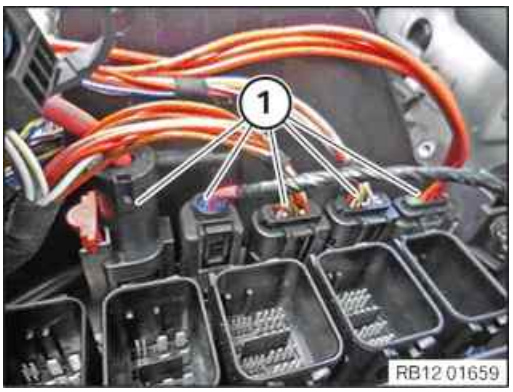

- Unlock and loosen connector (1).

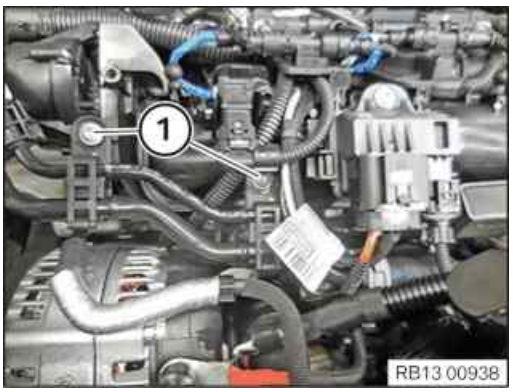

- Loosen screws (1).

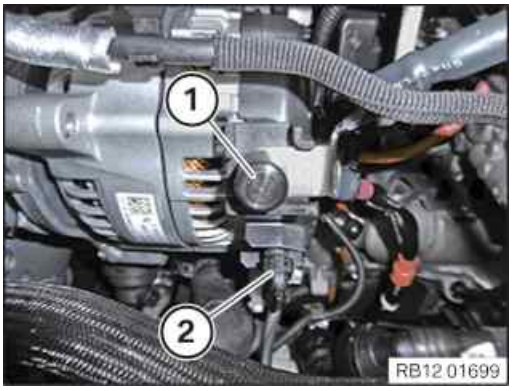

- Release the positive battery cable (1) on the alternator and place to one side.
- Unlock connector (2) and pull off.

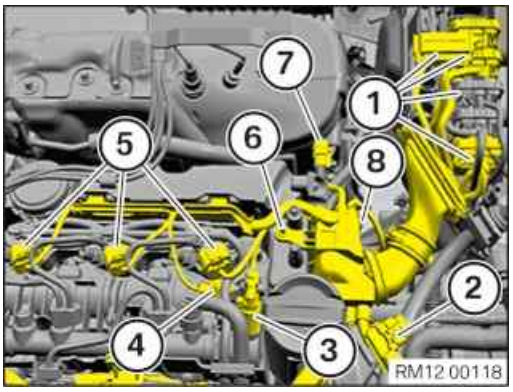

- Disconnect all connectors (1) from the DME control unit and remove the integrated supply module (PDM).
- Unlock connector (2) and pull off from hot film air mass meter.
- Unlock connector (3) and pull off from fuel pressure regulator.
- Unlock connector (4) and disconnect from camshaft sensor.
- Unlock the connector (5) and pull off from the injectors.
- Loosen screw (6).
- Unlock connector (7) and disconnect from differential pressure sensor.

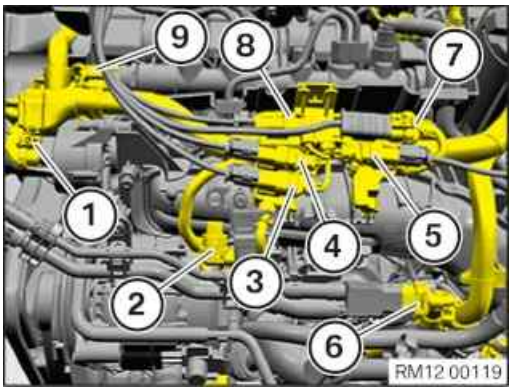

- Unlock connector (1) and pull it off the servomotor for the swirl flap.
- Unlock the connector (2) and pull it off the charging pressure sensor.
- Unlock connector (3) and pull off from exhaust temperature sensor downstream from the diesel particulate filter.
- Unlock connector (4) and pull off from exhaust gas pressure sensor for the low pressure exhaust-gas recirculation cooler.
- Unlock connector (5) and pull off from exhaust gas pressure sensor for the exhaust-gas recirculation cooler.
- Unlock connector (6) and pull off from the fuel pressure and temperature sensor.
- Unlock and disconnect the connector (7) from the front oxygen sensor.
- Unlock connector (8) and pull off from exhaust gas pressure sensor upstream from the diesel particulate filter.

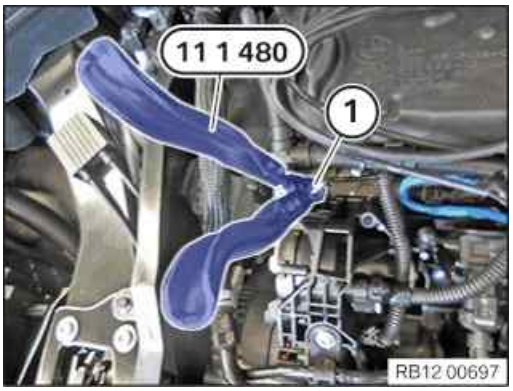

- Unlock connector (1) at all glow elements using special tool **0 490 796 (11 1 480)** and release.
- Guide the wiring harness out of the guide on the cylinder head cover and place to one side.

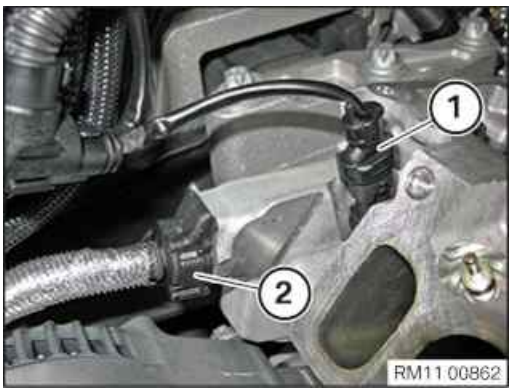

- Unlock and loosen connector (1).
- Unlock the clamp of the coolant line (2) and release the coolant line.

16 – Removing the cable clips from the intake plenum

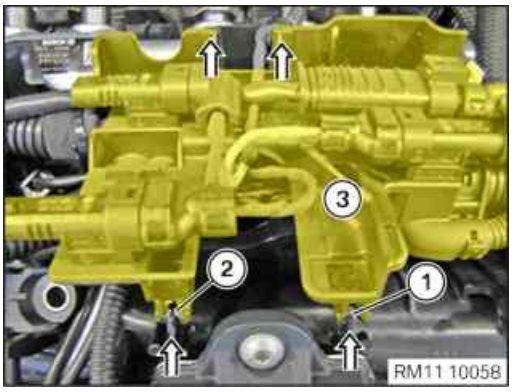

- Release the clips (1) and (2).
- Feed out the cable clip (3) in the direction of the arrow and set it aside.

17 – Removing the intake plenum

TECHNICAL INFORMATION

Collect and dispose of emerging fluids. Observe country-specific waste disposal regulations.

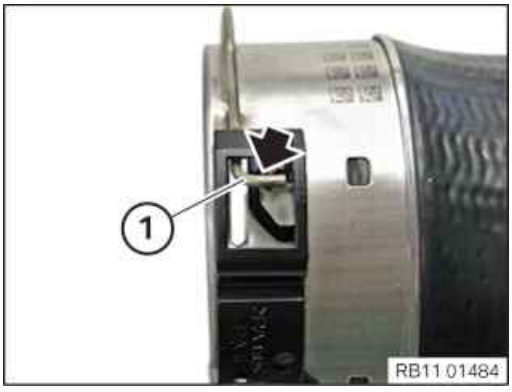

- Unlock the lock (1).

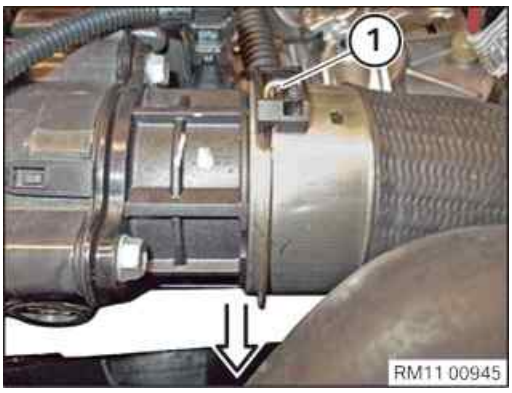

- Ensure that the lock (1) is unlocked.
- Pull the charge air line off the throttle valve.

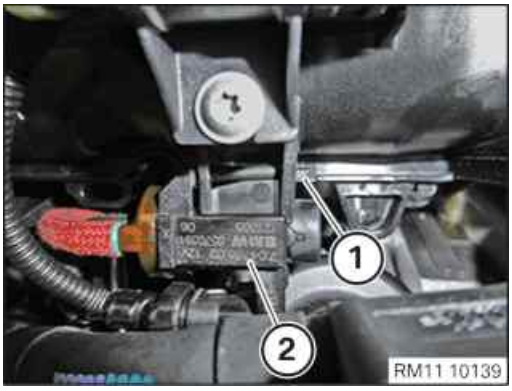

- Unlock the lock (1) upward.
- Guide out the electric changeover valve (2) to the left and set it aside.

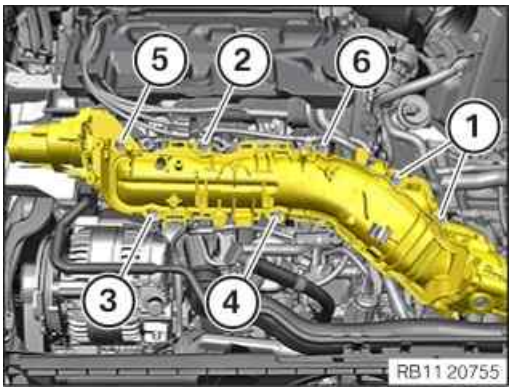

- Loosen the screws (1) on the exhaust-gas recirculation cooler.
- Release the screws (2) to (6).
- Guide the intake plenum out forwards and remove it.

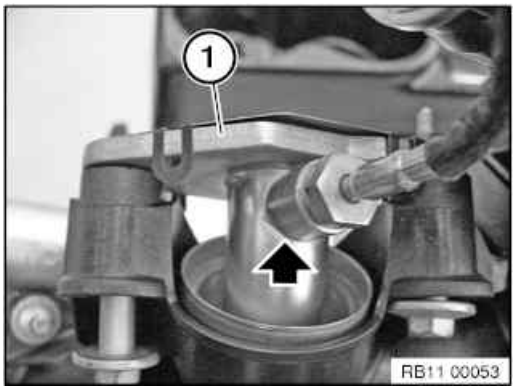

- Remove the exhaust-gas recirculation pipe (1) in direction of arrow.

MAIN WORK

18 – Remove the high pressure line between the high pressure pump and the rail

WARNING

Hot surfaces.

Risk of burning!

- Perform all work only on components that have cooled down.

WARNING

Hot fluids.

Risk of scalding!

- Conduct all work in the vehicle wearing appropriate personal protective equipment only.

WARNING

Working on fuel system.

Risk of fire! Danger of explosion!

- When working on the fuel system, make sure that the workbay is sufficiently ventilated, e.g. using extraction unit.
- Tightly seal off open lines and connections; collect any escaping fuel directly at the point of exit.
- No fire, sparks, open flames or smoking.

CAUTION

On releasing high pressure line, fuel may emerge at high speed.

Danger of injury!

- Wear suitable personal protective equipment.
- Allow the cooling system to cool down to a temperature below 40°C before starting installation work.
- Note warnings on cylinder head cover.

TECHNICAL INFORMATION

Collect and dispose of emerging fluids. Observe country-specific waste disposal regulations.

TECHNICAL INFORMATION

Reset special tool in early to avoid bending pressure lines.

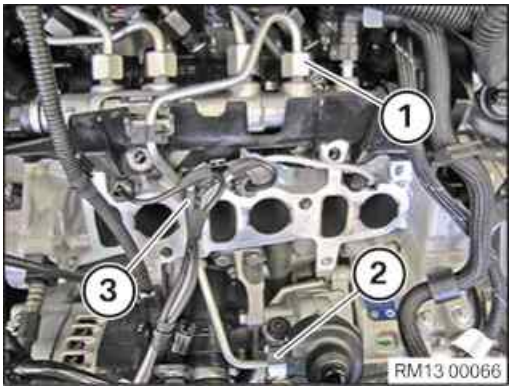

- Loosen union nut (1) with special tool **0 495 910 (37 1 152)**.
- Reset the special tool **0 495 910 (37 1 152)** in good time in order to avoid bending high pressure line (3).
- Loosen union nut (2) with special tool **0 495 910 (37 1 152)**.
- Reset the special tool **0 495 910 (37 1 152)** in good time in order to avoid bending high pressure line (3).
- Catch and dispose of escaping fuel.
- Feed the high pressure line (3) out and remove.
- Seal open connections using special tool **2 413 106**.

19 – Installing high pressure line between rail and high pressure pump

WARNING

Working on fuel system.

Risk of fire! Danger of explosion!

- When working on the fuel system, make sure that the workbay is sufficiently ventilated, e.g. using extraction unit.
- Tightly seal off open lines and connections; collect any escaping fuel directly at the point of exit.
- No fire, sparks, open flames or smoking.

TECHNICAL INFORMATION

Reset special tool in early to avoid bending pressure lines.

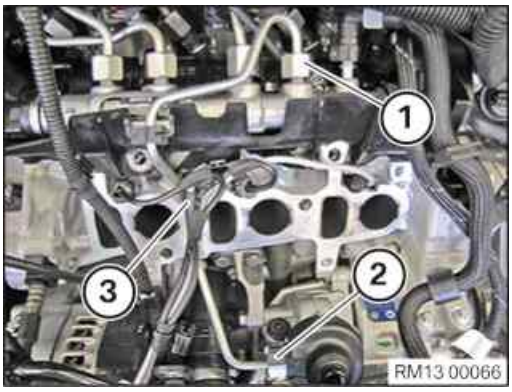

- Remove special tool **2 413 106**.
- Thread in and install the high pressure line (3).
- Make sure that the rubber grommet is positioned correctly in the area of the cylinder head cover.
- Tighten the union nut (1) hand-tight.
- Tighten the union nut (2) hand-tight.
- Ensure that high pressure line (3) is installed without any strain.

TECHNICAL INFORMATION

Renew high pressure lines when the tightening torque exceeds the maximum of 30 Nm.

- Tighten the union nut (1) with the special tool **0 495 910 (37 1 152)**.
- Reset the special tool **0 495 910 (37 1 152)** in good time in order to avoid bending high pressure line (3).

High pressure line between high pressure pump and rail

High-pressure pipe		Tightening torque	28 Nm

- Tighten the union nut (2) with the special tool **0 495 910 (37 1 152)**.
- Reset the special tool **0 495 910 (37 1 152)** in good time in order to avoid bending high pressure line (3).

High pressure line between high pressure pump and rail

High-pressure pipe		Tightening torque	28 Nm

POSTPROCESSES

20 – Installing the intake plenum

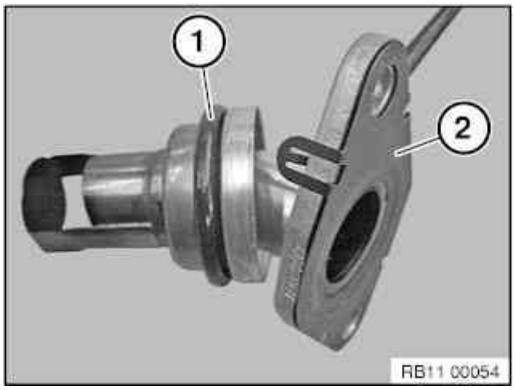

- Renew O-ring (1).

  Parts: O-ring
- Unclip the seal (2).
- Renew gasket.

  Parts: Gasket
- Position seal and clip in.

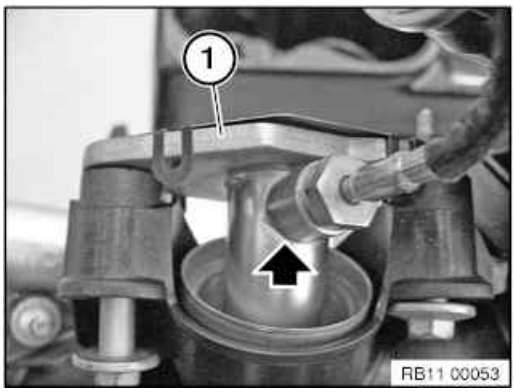

- Install the exhaust-gas recirculation pipe (1) in the intake plenum.

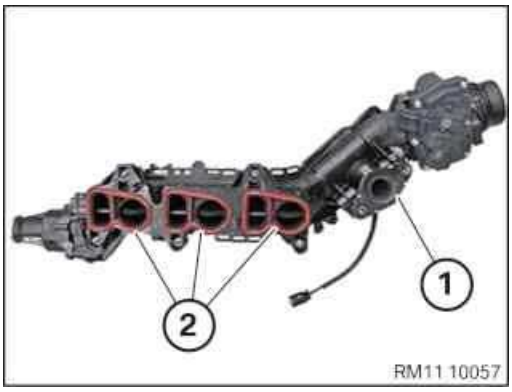

- Renew gaskets (2).

  Parts: Gasket
- Ensure that the seal (1) is firmly mounted on the intake plenum.

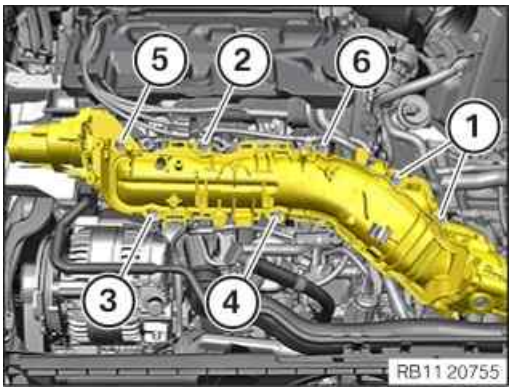

- Guide in and install intake plenum .
- Tighten the screws (1) to (6).

Intake plenum to cylinder head

M6		Tightening torque	11 Nm

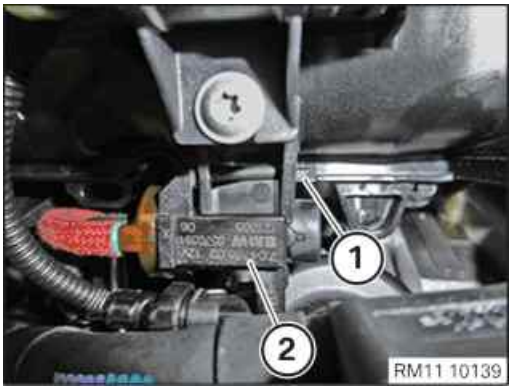

- Feed the electric changeover valve (2) from left to right into the holder on the intake plenum.
- Lock (1) must engage audibly.

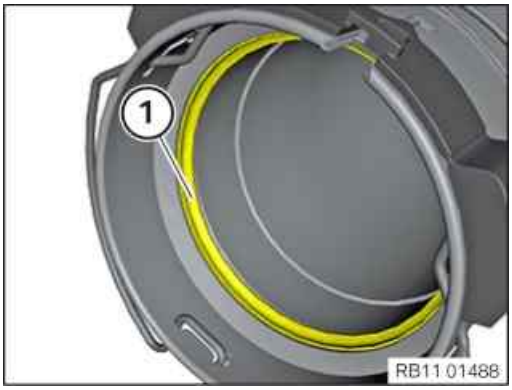

- Check the sealing ring (1) for damage and renew the sealing ring (1) as needed.

  Parts: Sealing ring

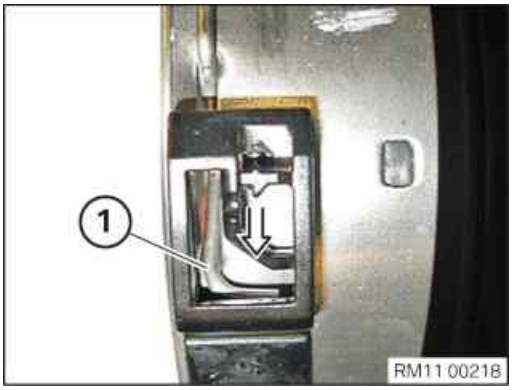

- Engage the lock (1) on the bracket (arrow).

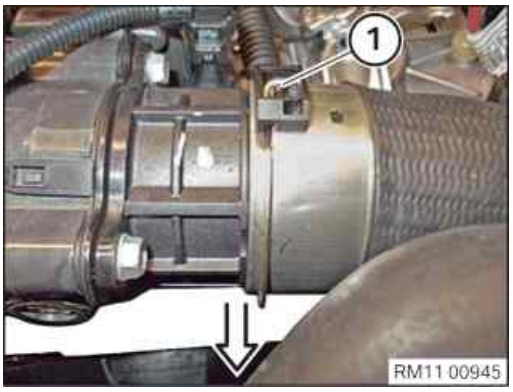

- Connect the charge air line to the throttle valve.

  The lock (1) must audibly engage.
- Check the charge air line for tight fit and freedom of movement.

21 – Installing the cable clip for the intake plenum

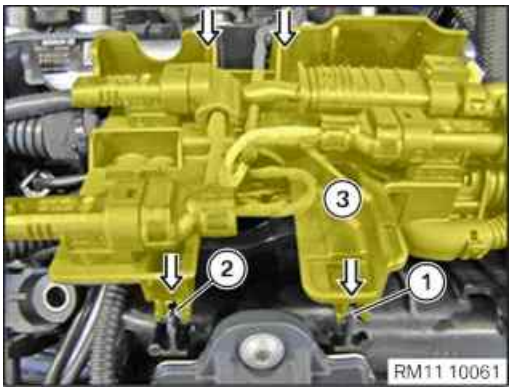

- Feed in and install the cable clip (3) in the direction of arrow.
- Engage clips (1) and (2).

22 – Fastening the wiring harness section for the intake plenum

Overview: Wiring harness section for the engine

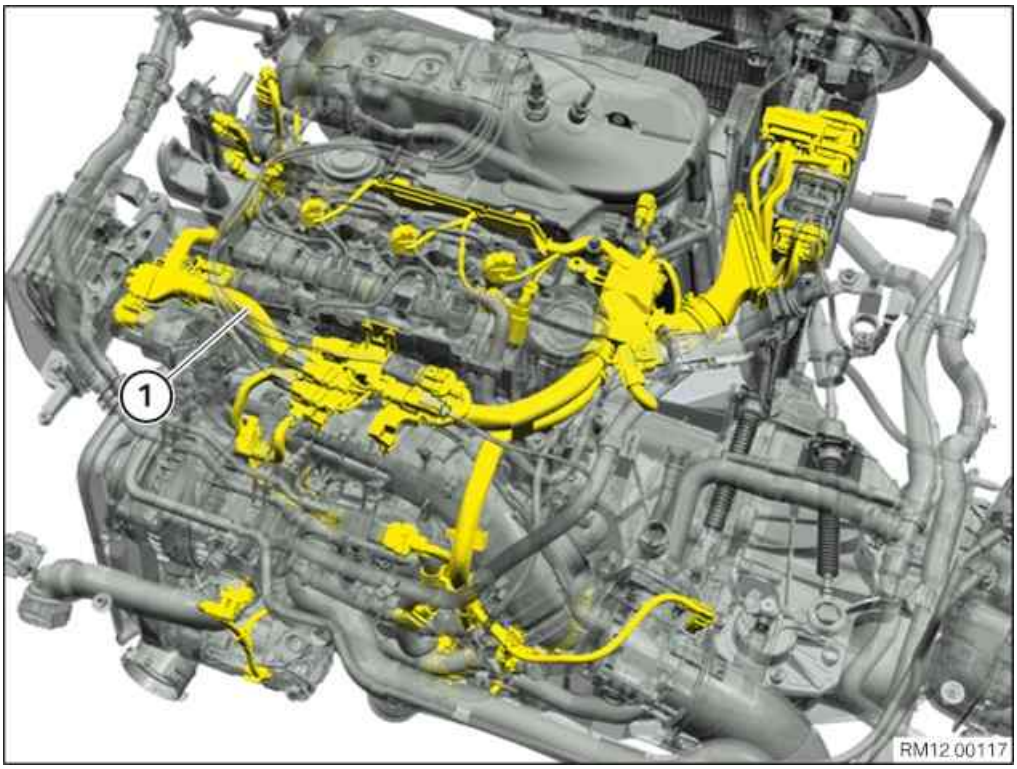

1 Wiring harness section for the engine

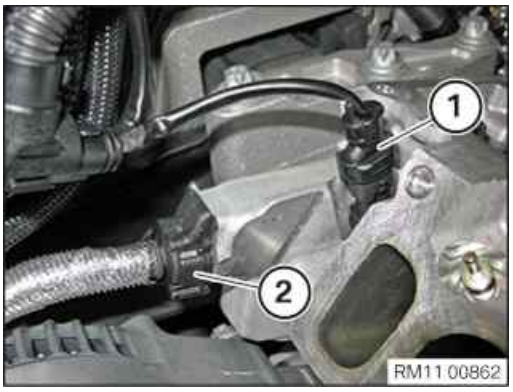

- Connect the coolant line (2) and lock the clamp.
- Connect and lock the connector (1).
- The locks must engage audibly.

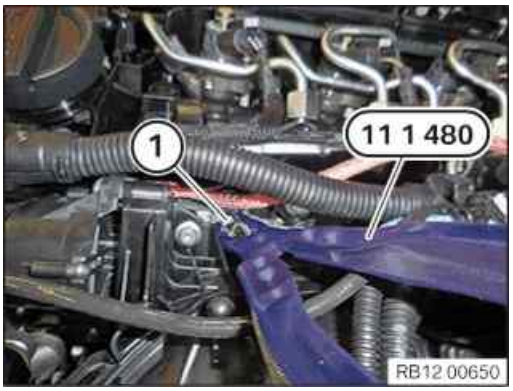

- Connect and lock the connector (1) on the glow elements.

  The connector (1) must lock audibly.
- Guide the wiring harness into the guide on the cylinder head cover.

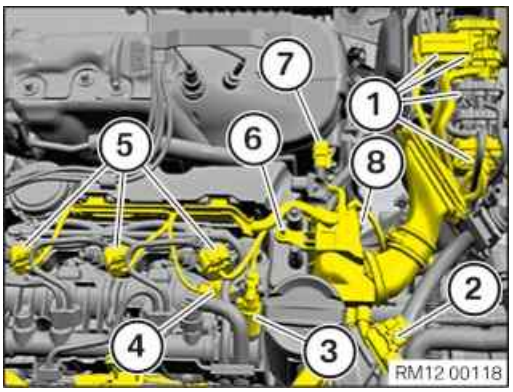

- Route the wiring harness section for the engine and fasten it with the clamps.
- Route all connectors (1) to the DME control unit and remove the integrated supply module (PDM).
- Connect and audibly lock the connector (2) to the hot film air mass meter.
- Attach connector (3) to the fuel pressure regulator and lock it audibly.
- Attach connector (4) to the camshaft sensor and lock it audibly.
- Attach connector (5) to the injectors and lock it audibly.
- Tighten down screw (6).

Wiring harness to cylinder head cover

TS5x20		Tightening torque	3,5 Nm

- Attach connector (7) to the differential pressure sensor and lock it audibly.

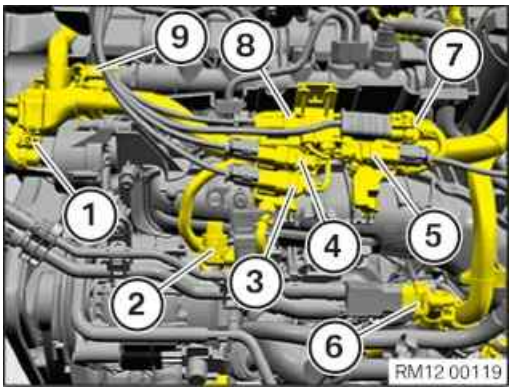

- Attach connector (1) to the servomotor for the swirl flaps and lock it audibly.
- Connect the connector (2) to the charging pressure sensor and lock it audibly.
- Attach connector (3) to the exhaust temperature sensor downstream from the diesel particulate filter and lock it audibly.
- Attach connector (4) to the exhaust temperature sensor for the low pressure exhaust-gas recirculation cooler and lock it audibly.
- Attach connector (5) to the exhaust temperature sensor for the exhaust-gas recirculation cooler and lock it audibly.
- Attach connector (6) to the fuel pressure and temperature sensor and lock it audibly.
- Connect the connector (7) to the front oxygen sensor and lock audibly.
- Attach connector (8) to the exhaust temperature sensor upstream from the diesel particulate filter and lock it audibly.

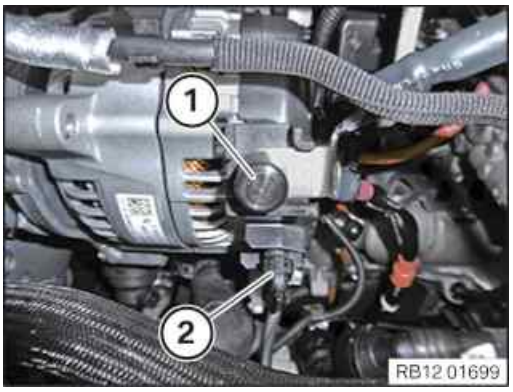

- Connect and lock the connector (2).

  Lock must audibly engage.
- Connect positive battery cable (1) on alternator and tighten.

Positive battery cable to alternator

M8		Tightening torque	19 Nm

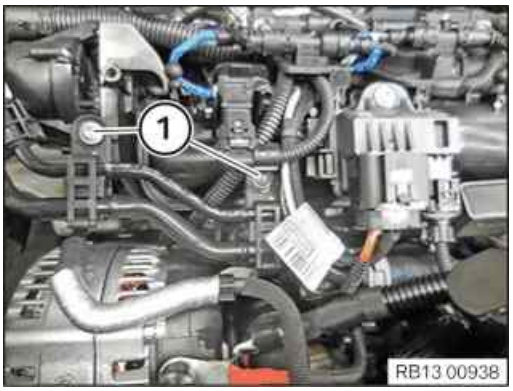

- Position fuel lines.
- Tighten the screws (1).

Fuel line to intake plenum

TS6x20		Tightening torque	5 Nm

- Connect and lock the connector (1).
- Make sure the connectors (1) engage audibly.

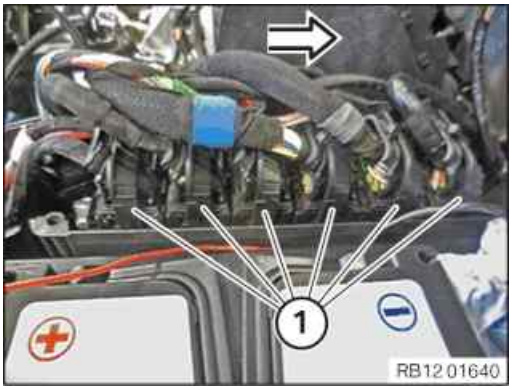

- Connect connector (1) in direction of arrow and lock.
- Make sure the connectors (1) engage audibly.

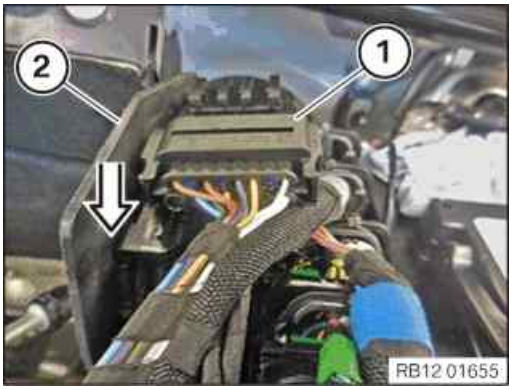

- Connect and lock the connector (1).
- Make sure the connector (1) engages audibly.
- Insert the connector (1) in the direction of arrow at the electronics box (2) and install.

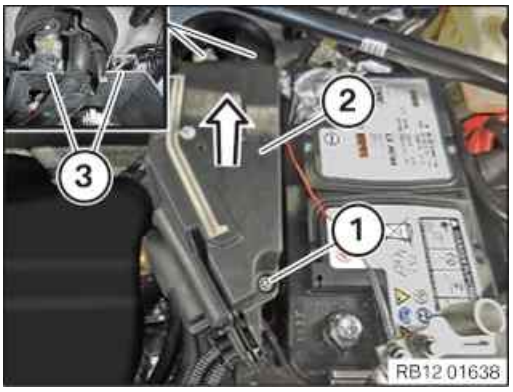

- Insert and install the cover (2) into the guides (3) in the direction of the arrow.
- Make sure the cover audibly engages (2) in the guides (3).
- Tighten down screw (1).

Cover to electronics box

RF5x26.5		Tightening torque	2,5 Nm

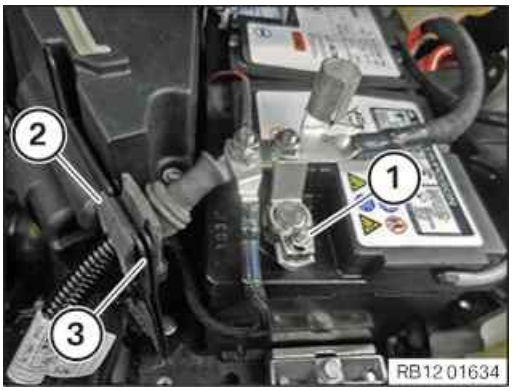

- Thread in positive battery cable (2) on holder (3) and install.
- Feed in and install positive battery terminal (1).
- Tighten positive battery terminal (1).

Positive battery terminal to battery

NutM6		Tightening torque	5 Nm

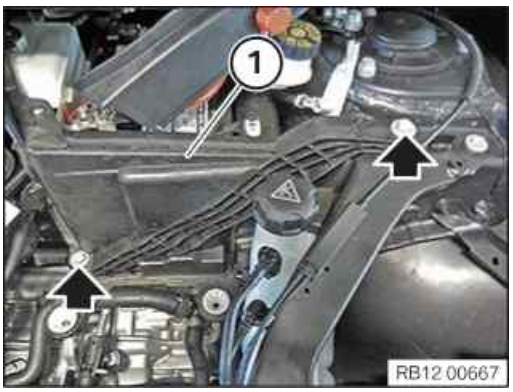

- Feed in and install tension strut (1).
- Tighten screws (arrows).

Tension strut to spring strut dome/battery tray

M8		Tightening torque	19 Nm

- Feed in and install cover (2) at the positive battery connection point.
- Tighten down screw (1).

Positive battery connection point cover to engine compartment partition wall

		Tightening torque	3 Nm

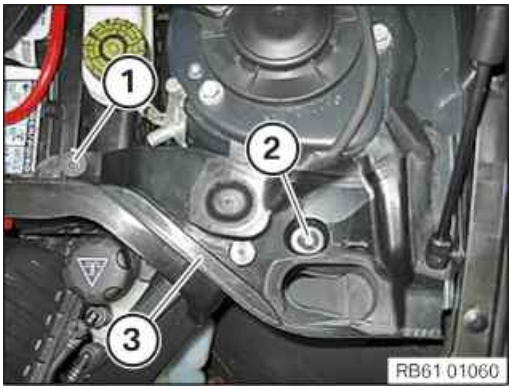

- Position the fixture for the gasket (3) and secure with the expanding rivet (2).
- Tighten down screw (1).

Battery cover

Screw		2,8 Nm

23 – Partially securing clean air pipe

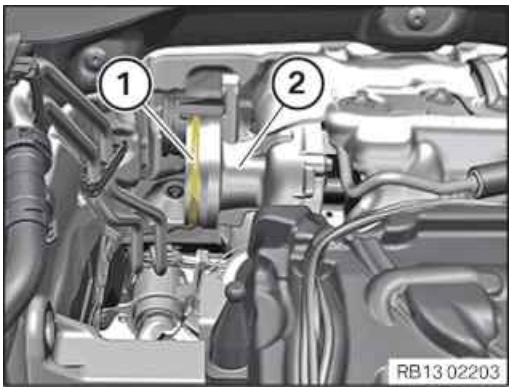

- Check the sealing ring (1) of the exhaust turbocharger (2) for damage and renew it if necessary.

- Feed in clean air pipe (1) and install.

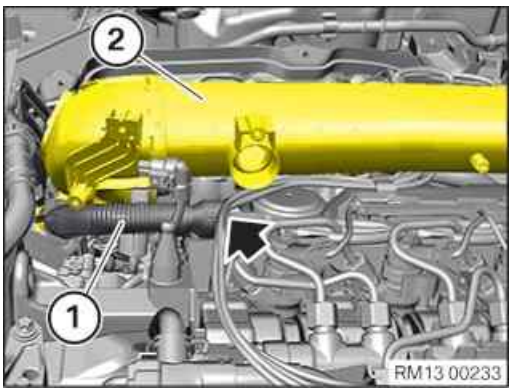

- Feed in ventilation line (1) at clean air pipe (2) and install.
- Feed in ventilation line (1) at cylinder head cover (arrow) and install.

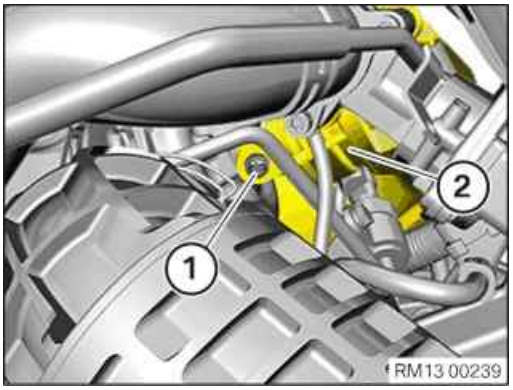

- Tighten screw (1) from clean air pipe (2).

Clean air pipe to exhaust turbocharger

Torx bolt BM8x25		Tightening torque	8 Nm

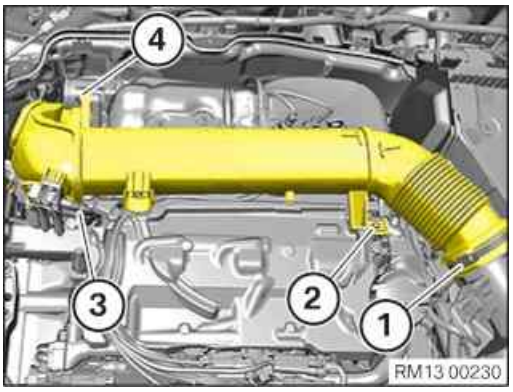

- Tighten down screw (4).

Clean air pipe to exhaust turbocharger

Torx bolt BM8x25		Tightening torque	8 Nm

- Connect and lock the connector (3).

  The connector (3) must engage audibly.
- Renew the screw (2).

  Parts: Screw
- Tighten down screw (2).

Clean air pipe to cylinder head cover

Oval-head screw	Renew screw.	Tightening torque	8 Nm

- Tighten the screw clamp (1).

Clean air pipe to intake silencer housing

Clamp		Tightening torque	3 Nm

24 – Installing intake silencer housing

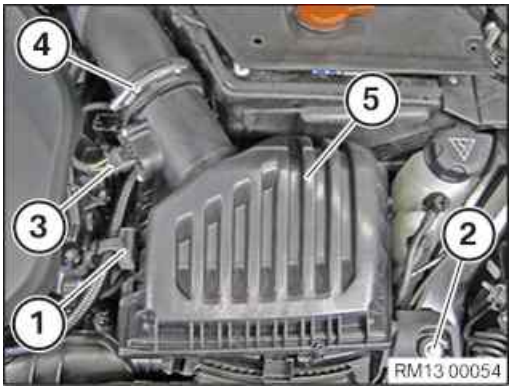

- Insert the intake silencer housing (5) into the rubber mounts and install it.

  Intake filter housing (5) must engage audibly.
- Tighten down screw (2).

Intake silencer housing to lock bridge

M6X30		Tightening torque	8 Nm

- Tighten clamp (4).

Clean air pipe to intake silencer housing

Clamp		Tightening torque	3 Nm

- Connect and lock the connector (3).

  The connector (3) must engage audibly.
- Insert and install the holder (1).

25 – Install the intake neck for the intake filter housing

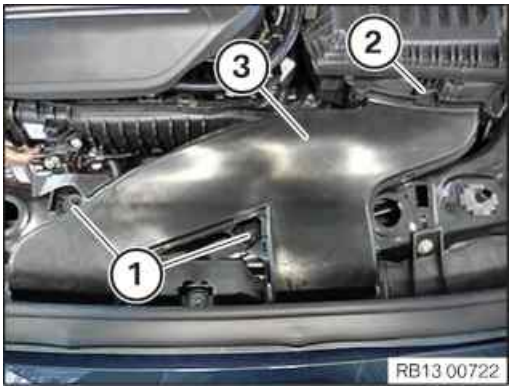

- Insert and install the intake neck (3).

  The lock (2) must audibly engage.
- Tighten nuts (1).

Intake neck to cross connection

M6		Tightening torque	8 Nm

26 – Installing the front underbody protection

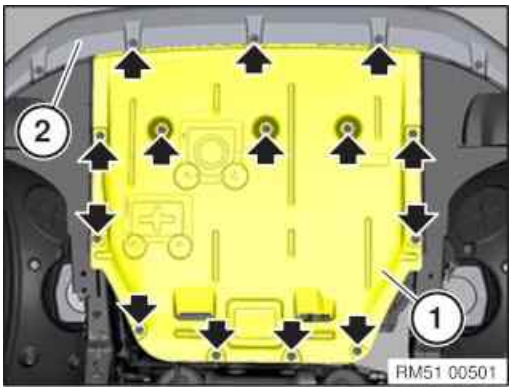

- Guide the front underbody protection (1) in under the bumper panel (2) and position it at the screw points.
- Tighten screws (arrows).

Underbody protection front

			3 Nm

27 – Install the acoustic cover for the injectors

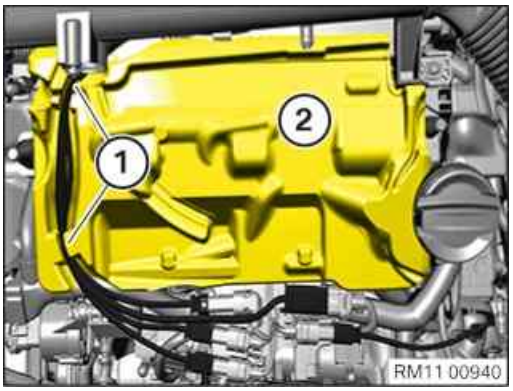

- Feed the acoustic cover (2) in and install.
- Fasten the wiring harness (1) to the brackets.

28 – Install resonator

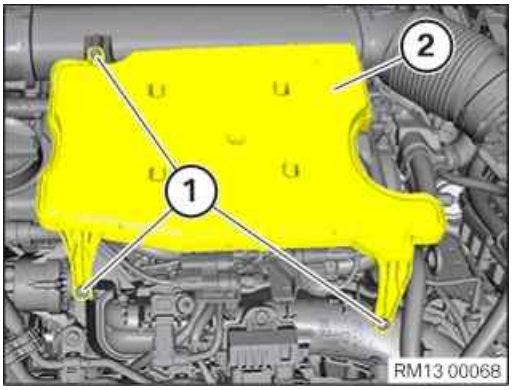

- Insert and install the resonator (2).
- Renew screws (1).

  Parts: Bolts
- Tighten the screws (1).

Resonator to manifold and clean air pipe

Screw TS6	Renew screw.	Tightening torque	5 Nm

29 – Install acoustic cover

RISK OF DAMAGE

Damage to the acoustic cover.

Jerky movements during disassembly and excessive application of force during installation may result in breakage of the acoustic cover.

- Disassemble or mount the acoustic cover carefully.
- Disassemble or mount snap-lock couplings of the ball pivots one after the other.
- Disassemble or mount acoustic cover only at temperatures >20 °C.
- Use only distilled water as an auxiliary material during installation, no lubricants.

- Check for correct installation of all rubber mounts in the acoustic cover (1).

- Clip in the acoustic cover into the holders in the indicated areas.
- Make sure that the acoustic cover engages audibly.

30 – Installing the upper bulkhead cover

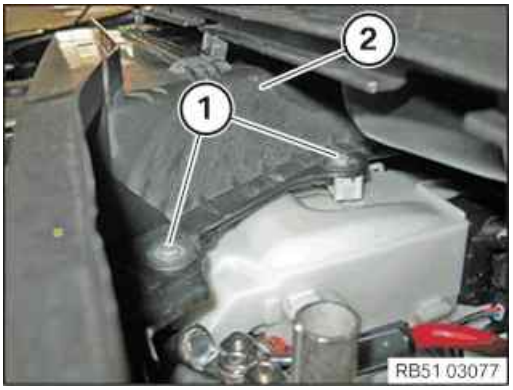

- Feed in and install cover (2) of the bulkhead at the top.
- Tighten the screws (1).

Bulkhead cover, top

Screw		Tightening torque	3 Nm

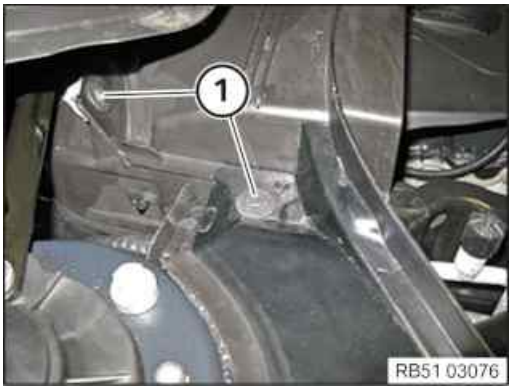

- Tighten the screws (1).

Bulkhead cover, top

Screw		Tightening torque	3 Nm

- Tighten the screws (1).

Bulkhead cover, top

Screw		Tightening torque	3 Nm

31 – Install the rear cowl panel cover

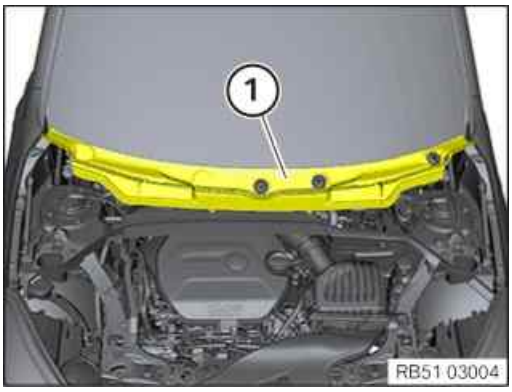

- Feed in and engage the rear cowl panel cover (1).

32 – Install the gutter strip on the windscreen on the left and right

NOTICE

Description is for left component only. Procedure on the right side is identical.

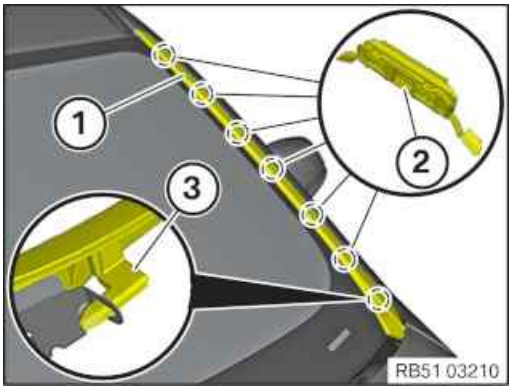

▶ **Install the gutter strip on the windscreen**

- Check the clamps (2) for damage and renew if necessary.
- Insert the gutter strip (1) with the guide (3).
- Align the gutter strip (1) at the roof and clip it in.

33 – Install left and right wiper arm

NOTICE

Description is for left component only. Procedure on the right side is identical.

▶ **Install the wiper arm**

TECHNICAL INFORMATION

The wiper system must be in zero position.
After installing the cowl panel cover and before fitting the wiper arm:
Activate the wiper system once to ensure that it has the correct installation position.

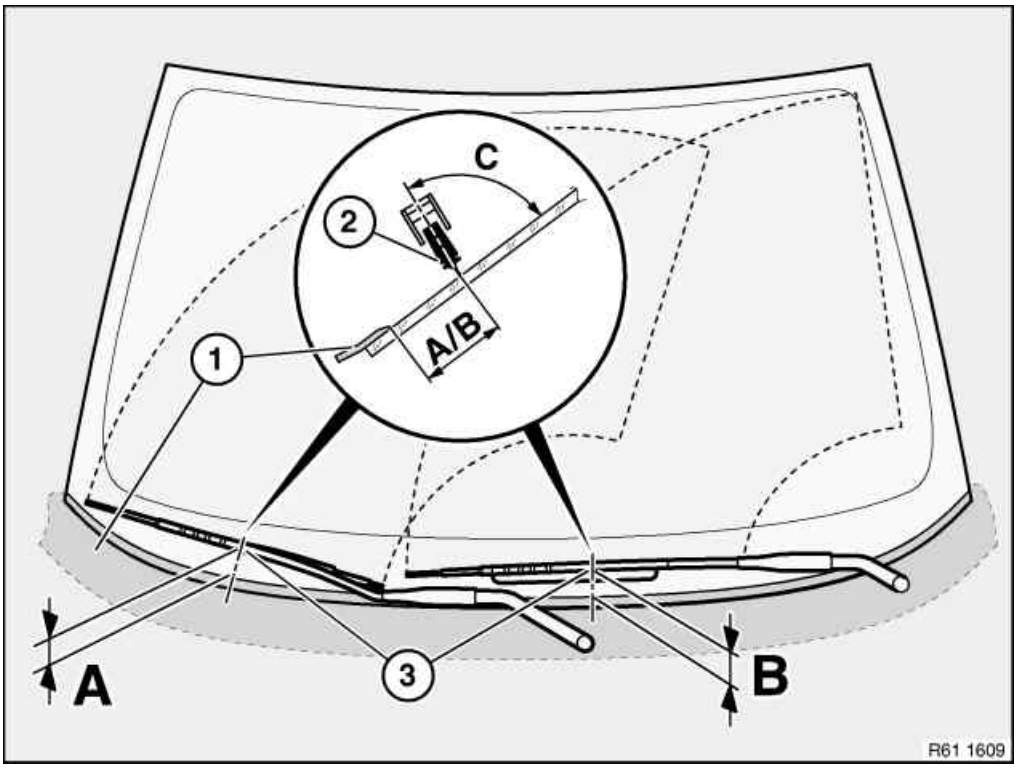

- Connect the wiper arm (3).
- Correctly position the wiper arm (2) in relation to the window edge (1).

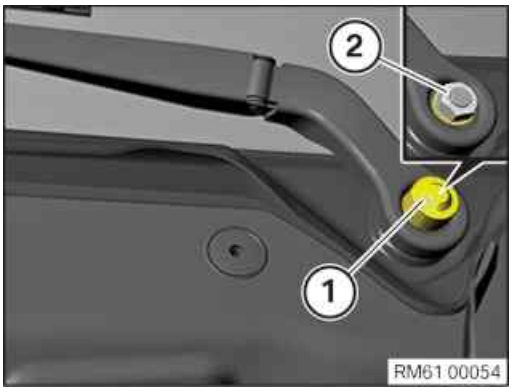

NOTICE

Description is for left component only. Procedure on the right side is identical.

- Tighten nut (2).

Windscreen wiper arm

Combination hexagon nut		Tightening torque	35 Nm

- Connect the protective cap (1).

34 – Installing front cowl panel cover

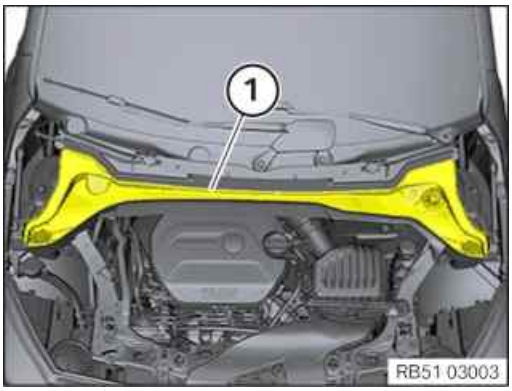

- Insert the cowl panel cover front (1) to the rear and install.
- Check cowl panel cover at front is correctly seated (1).

35 – Install the seal for the bonnet

NOTICE

Schematic diagram is for example purposes. Some parts may differ in certain details.

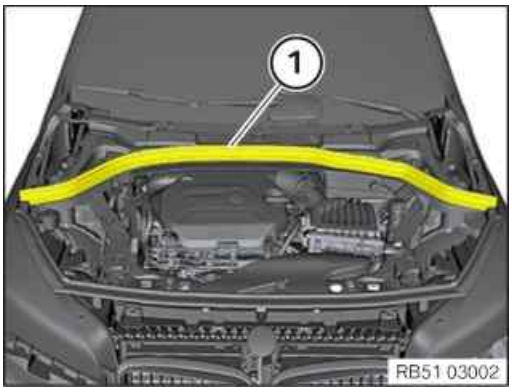

- Install bonnet seal at rear (1).
- Ensure that the rear bonnet seal (1) is fitted correctly.

36 – Disconnecting all battery earth leads

- See additional information.

Additional Information

Overview of Tightening Torques

High pressure line between high pressure pump and rail			Used in step 19
High-pressure pipe		Tightening torque	28 Nm

Intake plenum to cylinder head			Used in step 20
M6		Tightening torque	11 Nm

Wiring harness to cylinder head cover			Used in step 22
TS5x20		Tightening torque	3,5 Nm

Positive battery cable to alternator			Used in step 22
M8		Tightening torque	19 Nm

Fuel line to intake plenum			Used in step 22
TS6x20		Tightening torque	5 Nm

Cover to electronics box			Used in step 22
RF5x26.5		Tightening torque	2,5 Nm

Positive battery terminal to battery			Used in step 22
NutM6		Tightening torque	5 Nm

Tension strut to spring strut dome/battery tray			Used in step 22
M8		Tightening torque	19 Nm

Positive battery connection point cover to engine compartment partition wall			Used in step 22
		Tightening torque	3 Nm

Battery cover			Used in step 22
Screw			2,8 Nm

Clean air pipe to exhaust turbocharger			Used in step 23
Torx bolt BM8x25		Tightening torque	8 Nm

Clean air pipe to cylinder head cover			Used in step 23
Oval-head screw	Renew screw.	Tightening torque	8 Nm

Clean air pipe to intake silencer housing			Used in step 23 24
Clamp		Tightening torque	3 Nm

Intake silencer housing to lock bridge			Used in step 24
M6X30		Tightening torque	8 Nm

Intake neck to cross connection			Used in step 25
M6		Tightening torque	8 Nm

Underbody protection front			Used in step 26
			3 Nm

Resonator to manifold and clean air pipe			Used in step 28
Screw TS6	Renew screw.	Tightening torque	5 Nm

Bulkhead cover, top			Used in step 30
Screw		Tightening torque	3 Nm

Windscreen wiper arm			Used in step 33
Combination hexagon nut		Tightening torque	35 Nm

Overview of Special Tools

0 490 796 (11 1 480) Pliers

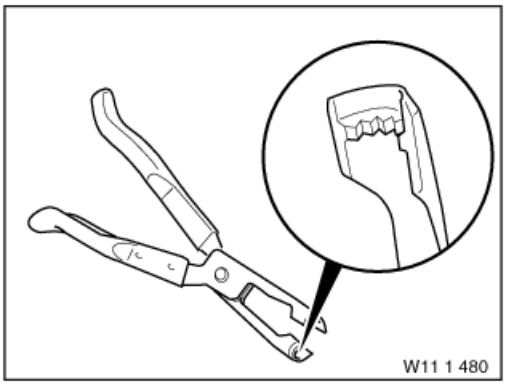

Common		Used in step 15
Usage	For removing valve stem seal	
Included in the tool or work		
Storage location	A10	
Replaced by		
In connection with		
SI-Number	01 01 93 (621)	

0 495 910 (37 1 152) Socket wrench

Common	Used in step 18 19
Usage	(Socket wrench)SW19
Included in the tool or work	0 495 908
Storage location	B21
Replaced by	
In connection with	
SI-Number	01 01 07 (333)

2 413 106 Fastener

Common	Used in step 18 19
Usage	For avoiding contamination and damage of rail, injectors and high pressure pump.
Included in the tool or work	
Storage location	Individual
Replaced by	
In connection with	
SI-Number	01 16 16 (419)

Overview Technical Data

Links

Repair instructions	Used in step
61 20 900 Disconnecting and connecting battery earth lead	1 36
61 20 900 Disconnecting and connecting battery earth lead	1 36
61 20 900 Disconnecting and connecting battery earth lead	1 36
61 20 900 Disconnecting and connecting battery earth lead	1 36
61 20 900 Disconnecting and connecting battery earth lead	1 36
61 20 900 Disconnecting and connecting battery earth lead	1 36
61 20 900 Disconnecting and connecting the battery earth lead (all battery earth leads)	1 36

13 53 330 Replacing all leakage oil lines

PRELIMINARY WORK

1 – Removing the acoustic cover

WARNING

Hot surfaces.

Risk of burning!

- Perform all work only on components that have cooled down.

RISK OF DAMAGE

Damage to the acoustic cover.

Jerky movements during disassembly and excessive application of force during installation may result in breakage of the acoustic cover.

- Disassemble or mount the acoustic cover carefully.
- Disassemble or mount snap-lock couplings of the ball pivots one after the other.
- Disassemble or mount acoustic cover only at temperatures >20 °C.
- Use only distilled water as an auxiliary material during installation, no lubricants.

- Unclip the acoustic cover from the marked areas towards the top.

2 – Remove resonator

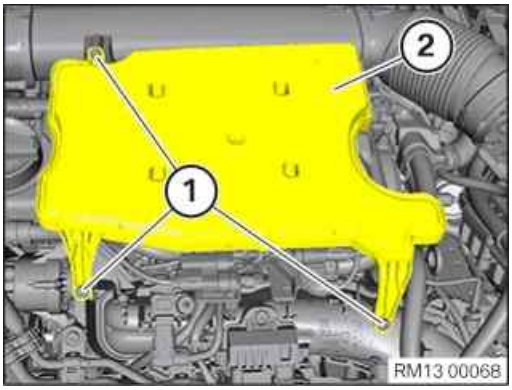

- Loosen screws (1).
- Guide out and remove the resonator (2).

3 – Remove the acoustic cover for the injectors

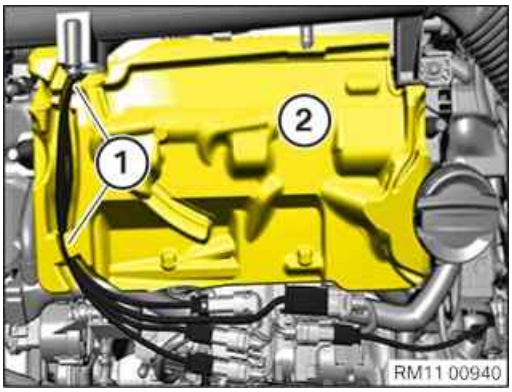

- Release the wiring harness (1) from the brackets.
- Guide the acoustic cover (2) out and remove.

4 – Remove leakage oil lines

WARNING

Working on fuel system.

Risk of fire! Danger of explosion!

- When working on the fuel system, make sure that the workbay is sufficiently ventilated, e.g. using extraction unit.
- Tightly seal off open lines and connections; collect any escaping fuel directly at the point of exit.
- No fire, sparks, open flames or smoking.

WARNING

Hot surfaces.

Risk of burning!

- Perform all work only on components that have cooled down.

RISK OF DAMAGE

Contaminant or foreign body.

Contamination can result in malfunctions, operating failure or leaks.

- Adhere to the utmost cleanliness.
- Protect components from contamination e.g. by covering.
- Close off line connections with seal plugs.

TECHNICAL INFORMATION

Collect and dispose of emerging fluids. Observe country-specific waste disposal regulations.

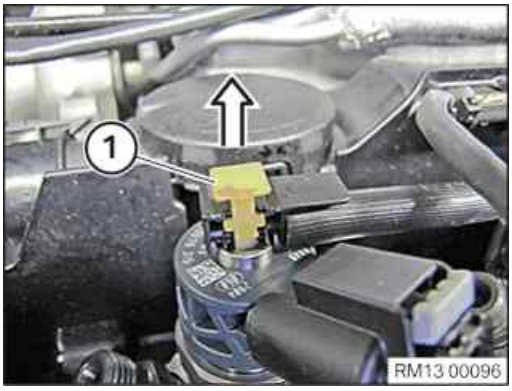

- Release lock (1) in direction of arrow.
- Pull the leakage oil line off the injector in direction of arrow.

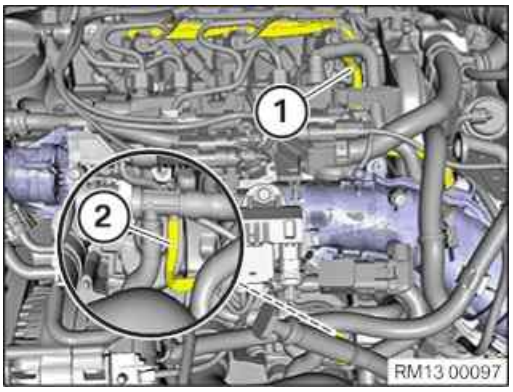

- Detach the leakage oil line (1) from the rubber grommet.
- Pull off the leakage oil line (1) from the T-connecting element (2) of the fuel line.
- Feed out leakage oil line (1) and remove.

5 – Install leakage oil lines

- Coat the sealing ring (1) with lubricant before connecting the leakage oil line to the injector.
- Check the sealing ring (1) for damage and if necessary, renew the leakage oil line .

  Parts: Leakage oil line

  Damaged sealing rings may cause malfunctions during fuel pressure build-up.

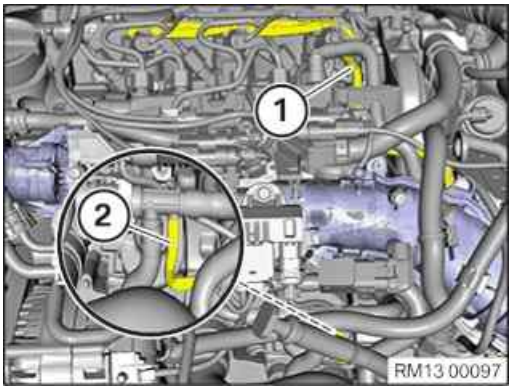

- Feed in leakage oil line (1) and install.
- Ensure the leakage oil line (1) is correctly fitted in the rubber grommet .
- Connect the leakage oil line (1) on the T-connecting element (2) of the fuel line.

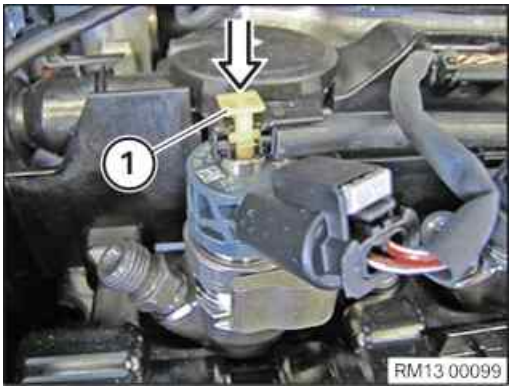

- Insert and install leakage oil line on the injector.
- Lock the lock in direction of arrow (1).

  Lock (1) must engage audibly.

POSTPROCESSES

6 – Install the acoustic cover for the injectors

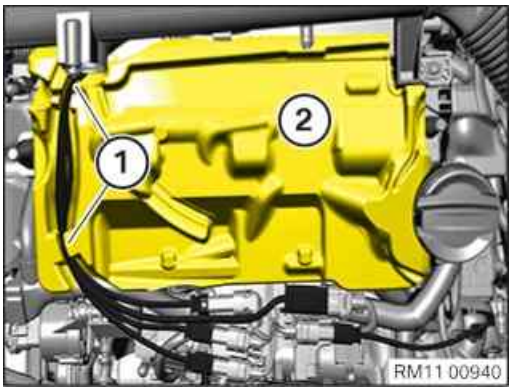

- Feed the acoustic cover (2) in and install.
- Fasten the wiring harness (1) to the brackets.

7 – Install resonator

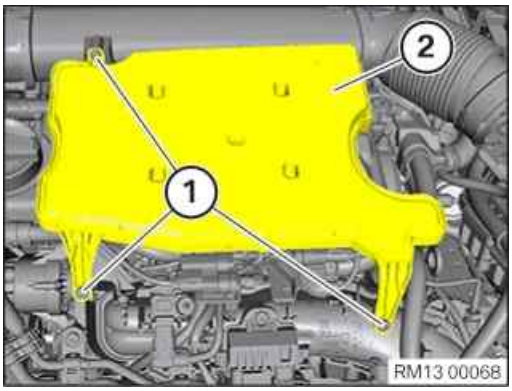

- Insert and install the resonator (2).
- Renew screws (1).

  Parts: Bolts
- Tighten the screws (1).

Resonator to manifold and clean air pipe

Screw TS6	Renew screw.	Tightening torque	5 Nm

8 – Install acoustic cover

RISK OF DAMAGE

Damage to the acoustic cover.

Jerky movements during disassembly and excessive application of force during installation may result in breakage of the acoustic cover.

- Disassemble or mount the acoustic cover carefully.
- Disassemble or mount snap-lock couplings of the ball pivots one after the other.
- Disassemble or mount acoustic cover only at temperatures >20 °C.
- Use only distilled water as an auxiliary material during installation, no lubricants.

- Check for correct installation of all rubber mounts in the acoustic cover (1).

- Clip in the acoustic cover into the holders in the indicated areas.
- Make sure that the acoustic cover engages audibly.

Additional Information

Overview of Tightening Torques

Resonator to manifold and clean air pipe Used in step 7

Screw TS6	Renew screw.	Tightening torque	5 Nm

13 53 170 Replacing all pressure lines

PRELIMINARY WORK

1 – Removing the acoustic cover

WARNING

Hot surfaces.

Risk of burning!

- Perform all work only on components that have cooled down.

RISK OF DAMAGE

Damage to the acoustic cover.

Jerky movements during disassembly and excessive application of force during installation may result in breakage of the acoustic cover.

- Disassemble or mount the acoustic cover carefully.
- Disassemble or mount snap-lock couplings of the ball pivots one after the other.
- Disassemble or mount acoustic cover only at temperatures >20 °C.
- Use only distilled water as an auxiliary material during installation, no lubricants.

- Unclip the acoustic cover from the marked areas towards the top.

2 – Remove resonator

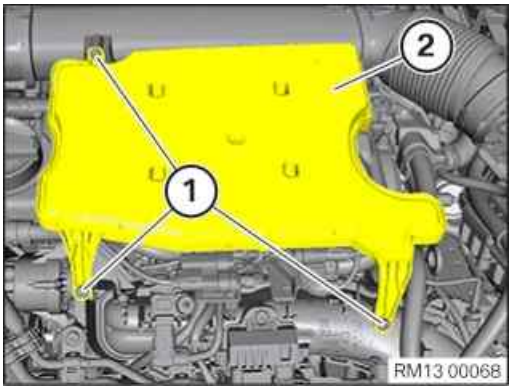

- Loosen screws (1).
- Guide out and remove the resonator (2).

3 – Remove the acoustic cover for the injectors

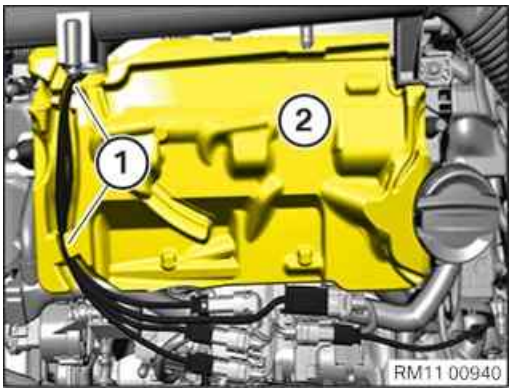

- Release the wiring harness (1) from the brackets.
- Guide the acoustic cover (2) out and remove.

4 – Removing high pressure lines between rail and injectors

WARNING

Hot surfaces.

Risk of burning!

- Perform all work only on components that have cooled down.

WARNING

Working on fuel system.

Risk of fire! Danger of explosion!

- When working on the fuel system, make sure that the workbay is sufficiently ventilated, e.g. using extraction unit.
- Tightly seal off open lines and connections; collect any escaping fuel directly at the point of exit.
- No fire, sparks, open flames or smoking.

CAUTION

On releasing high pressure line, fuel may emerge at high speed.

Danger of injury!

- Wear suitable personal protective equipment.
- Allow the cooling system to cool down to a temperature below 40°C before starting installation work.
- Note warnings on cylinder head cover.

RISK OF DAMAGE

Contaminant or foreign body.

Contamination can result in malfunctions, operating failure or leaks.

- Adhere to the utmost cleanliness.
- Protect components from contamination e.g. by covering.
- Close off line connections with seal plugs.

TECHNICAL INFORMATION

If several high pressure lines are removed, ensure that each high pressure line is re-installed in its original installation location. Mark high pressure lines.

TECHNICAL INFORMATION

Reset special tool in early to avoid bending pressure lines.

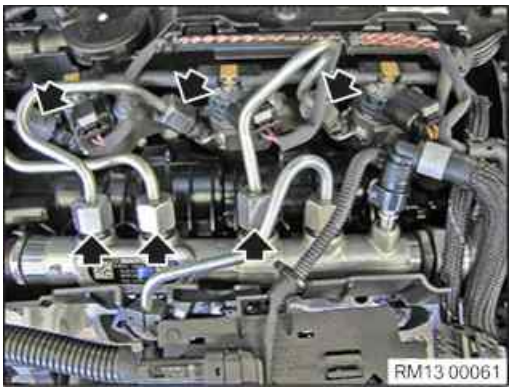

- Release the high pressure lines (arrows) with the special tool **0 495 910 (37 1 152)**.
- Feed out and remove the high pressure lines (arrows).
- Seal off all the open cable connections with the special tool **2 413 106**.

5 – Installing high pressure lines between rail and injectors

TECHNICAL INFORMATION

If several high pressure lines are removed, ensure that each high pressure line is re-installed in its original installation location. Mark high pressure lines.

TECHNICAL INFORMATION

Reset special tool in early to avoid bending pressure lines.

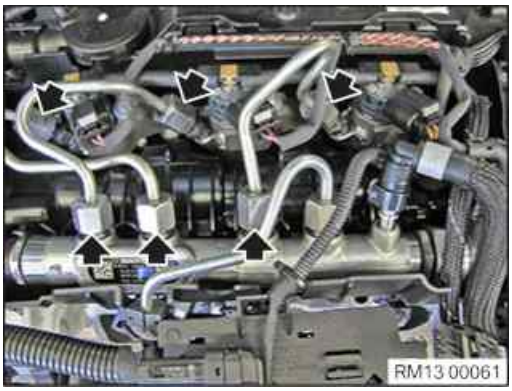

- Remove special tool **2 413 106**.
- Feed in and install the high pressure lines (arrows).
- Hand-tighten the high pressure lines (arrows).

TECHNICAL INFORMATION

Renew high pressure lines when the tightening torque exceeds the maximum of 30 Nm.

- Tighten the high pressure lines (arrows) with the special tool **0 495 910 (37 1 152)**.

High pressure lines between injector and rail

High pressure lines		Tightening torque	28 Nm

- Check the high pressure lines for tightness (**visual inspection**).

POSTPROCESSES

6 – Install the acoustic cover for the injectors

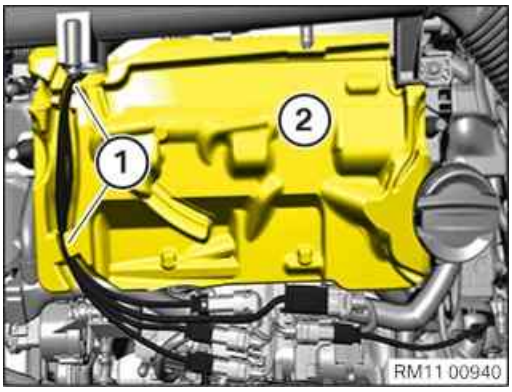

- Feed the acoustic cover (2) in and install.
- Fasten the wiring harness (1) to the brackets.

7 – Install resonator

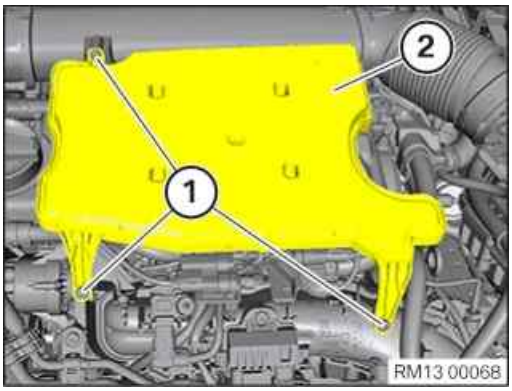

- Insert and install the resonator (2).
- Renew screws (1).

  Parts: Bolts
- Tighten the screws (1).

Resonator to manifold and clean air pipe

Screw TS6	Renew screw.	Tightening torque	5 Nm

8 – Install acoustic cover

RISK OF DAMAGE

Damage to the acoustic cover.

Jerky movements during disassembly and excessive application of force during installation may result in breakage of the acoustic cover.

- Disassemble or mount the acoustic cover carefully.
- Disassemble or mount snap-lock couplings of the ball pivots one after the other.
- Disassemble or mount acoustic cover only at temperatures >20 °C.
- Use only distilled water as an auxiliary material during installation, no lubricants.

- Check for correct installation of all rubber mounts in the acoustic cover (1).

- Clip in the acoustic cover into the holders in the indicated areas.
- Make sure that the acoustic cover engages audibly.

Additional Information

Overview of Tightening Torques

High pressure lines between injector and rail — Used in step 5

High pressure lines		Tightening torque	28 Nm

Resonator to manifold and clean air pipe — Used in step 7

Screw TS6	Renew screw.	Tightening torque	5 Nm

Overview of Special Tools

0 495 910 (37 1 152) Socket wrench

Common — Used in step 4 5

Usage	(Socket wrench)SW19
Included in the tool or work	0 495 908
Storage location	B21
Replaced by	
In connection with	
SI-Number	01 01 07 (333)

2 413 106 Fastener

Common — Used in step 4 5

Usage	For avoiding contamination and damage of rail, injectors and high pressure pump.
Included in the tool or work	
Storage location	Individual
Replaced by	
In connection with	
SI-Number	01 16 16 (419)

13 53 330 Replacing leakage oil lines (B37, B47)

Necessary preliminary tasks:

- Remove resonator.

Attention!

It is essential to adhere to conditions of absolute cleanliness when carrying out repair work on the fuel system.

- Do not allow any dirt particles or foreign bodies to get into the system.
- Use only lint-free cloths.
- Remove all traces of dirt contamination before removing pipes or individual components.

You must protect the alternator against dirt contamination before carrying out any repair work on the fuel circuit.

Cover alternator with suitable materials.

Failure to comply with this procedure may result in an alternator malfunction.

Removal:

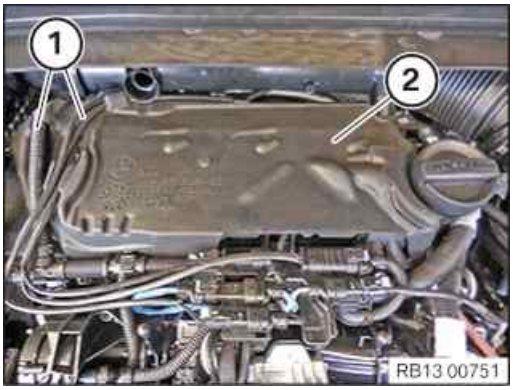

Engine: B47

Release cable (1) from sound insulation (2).

Remove sound insulation (2) upwards.

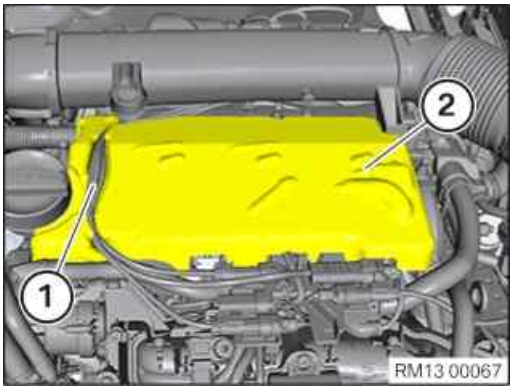

Engine: B37

Release cable (1) from sound insulation (2).

Remove sound insulation (2) upwards.

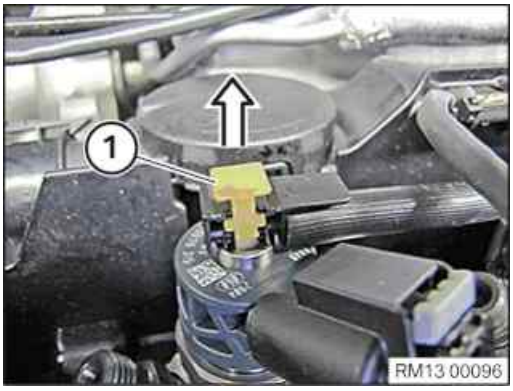

Unlock locks (1) upwards.

Pull leakage oil line from injectors of cylinders 1-4 up and off.

Attention!

Coat sealing ring (1) with lubricant before connecting leakage oil line to injector.

Check sealing ring for damage, damaged sealing rings can cause malfunctions in the fuel pressure build-up.

The entire leakage oil line must be replaced if seal (1) is damaged.

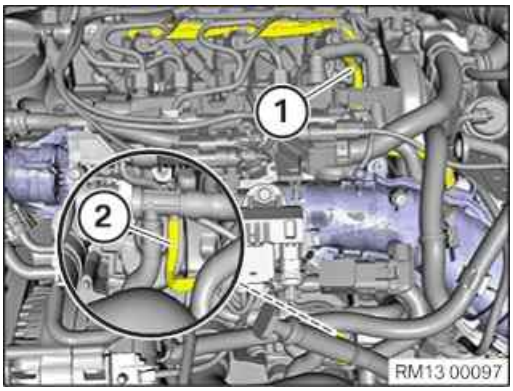

Release leakage oil lines (1) from the injectors. Release leakage oil line from rubber grommet.

Detach leakage oil line from T-piece (2) of fuel line (close to high pressure pump).

Feed out leakage oil line and remove.

Installation:

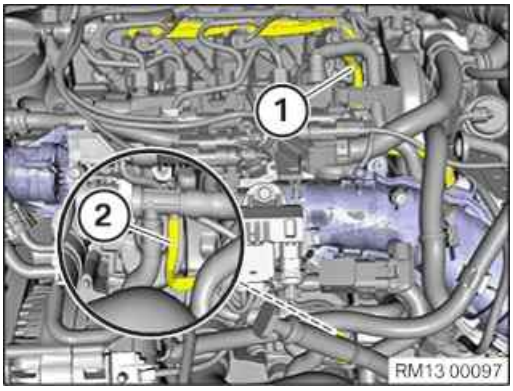

Route and install leakage oil line (1). Ensure leakage oil line is correctly fitted in rubber grommet.

Connect leakage oil line to T-piece (2) in fuel line (close to high pressure pump).

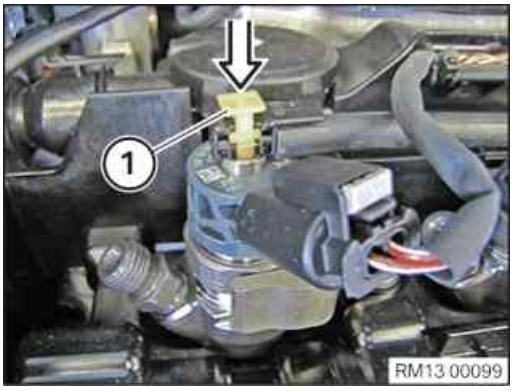

Connect leakage oil line to the fuel injectors of cylinders 1-4.

Turn locks (1) down to lock.

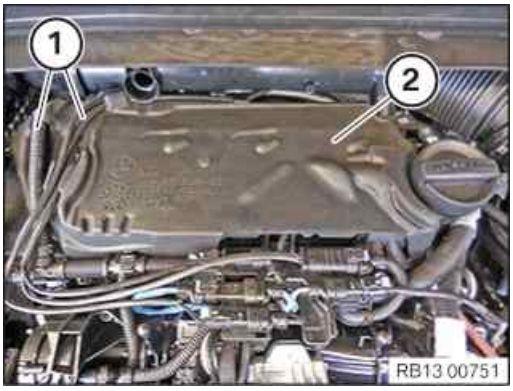

Engine: B47

Install sound insulation (2).

Secure cable (1) to sound insulation (2).

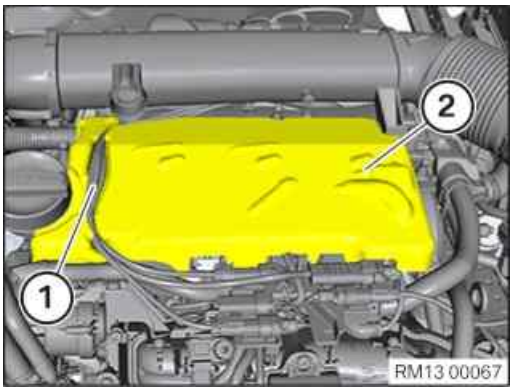

Engine: B37

Install sound insulation (2).

Secure cable (1) to sound insulation (2).

Required follow-up work:

- Remove resonator.
- Check fuel system for leak tightness.

13 53 570 Replacing pressure regulator on pressure accumulator of fuel injection system (B37)

Recycling:

Catch and dispose of escaping fuel.

Observe country-specific waste disposal regulations.

Necessary preliminary tasks:

- Remove pressure accumulator

Removal:

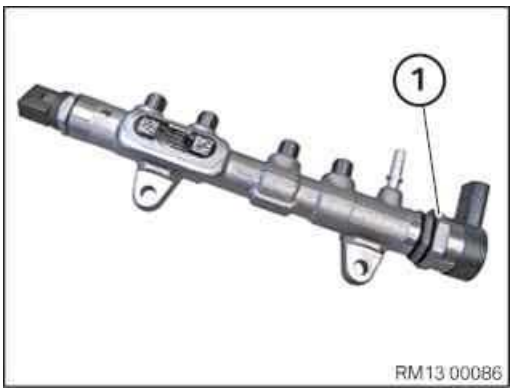

Grip removed pressure accumulator at flattened area.

Grip at hexagon head (1) when removing pressure regulator.

Observe installation position of pressure regulator, if nec., attach mark.

Release pressure regulator (1) and remove.

Installation:

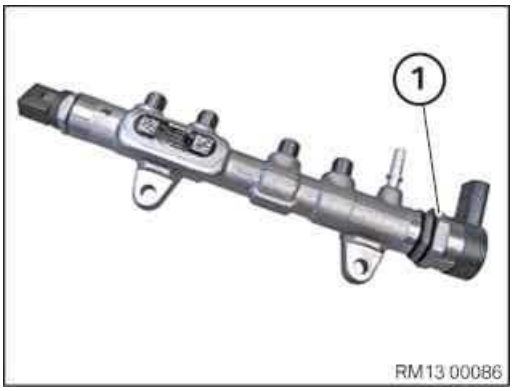

Grip removed pressure accumulator at flattened area.

Grip at hexagon head when installing pressure regulator (1).

Observe installation position of pressure regulator.

Install pressure regulator (1) and tighten.

Tightening torque 13 53 4AZ.

Required follow-up work:

- Install pressure accumulator

13 53 570 Replacing the injection system pressure regulator

PRELIMINARY WORK

1 – Disconnecting all battery earth leads

- See additional information.

2 – Removing the acoustic cover

WARNING

Hot surfaces.

Risk of burning!

- Perform all work only on components that have cooled down.

RISK OF DAMAGE

Damage to the acoustic cover.

Jerky movements during disassembly and excessive application of force during installation may result in breakage of the acoustic cover.

- Disassemble or mount the acoustic cover carefully.
- Disassemble or mount snap-lock couplings of the ball pivots one after the other.
- Disassemble or mount acoustic cover only at temperatures >20 °C.
- Use only distilled water as an auxiliary material during installation, no lubricants.

- Unclip the acoustic cover from the marked areas towards the top.

3 – Remove resonator

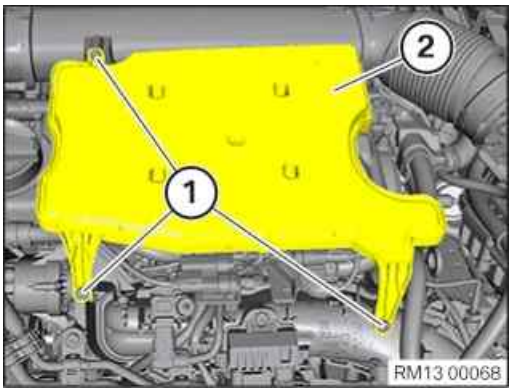

- Loosen screws (1).
- Guide out and remove the resonator (2).

4 – Remove the acoustic cover for the injectors

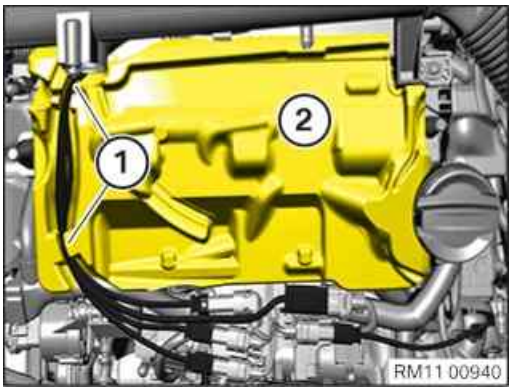

- Release the wiring harness (1) from the brackets.
- Guide the acoustic cover (2) out and remove.

5 – Removing high pressure lines between rail and injectors

WARNING

Hot surfaces.

Risk of burning!

- Perform all work only on components that have cooled down.

WARNING

Working on fuel system.

Risk of fire! Danger of explosion!

- When working on the fuel system, make sure that the workbay is sufficiently ventilated, e.g. using extraction unit.
- Tightly seal off open lines and connections; collect any escaping fuel directly at the point of exit.
- No fire, sparks, open flames or smoking.

CAUTION

On releasing high pressure line, fuel may emerge at high speed.

Danger of injury!

- Wear suitable personal protective equipment.
- Allow the cooling system to cool down to a temperature below 40°C before starting installation work.
- Note warnings on cylinder head cover.

RISK OF DAMAGE

Contaminant or foreign body.

Contamination can result in malfunctions, operating failure or leaks.

- Adhere to the utmost cleanliness.
- Protect components from contamination e.g. by covering.
- Close off line connections with seal plugs.

TECHNICAL INFORMATION

If several high pressure lines are removed, ensure that each high pressure line is re-installed in its original installation location. Mark high pressure lines.

TECHNICAL INFORMATION

Reset special tool in early to avoid bending pressure lines.

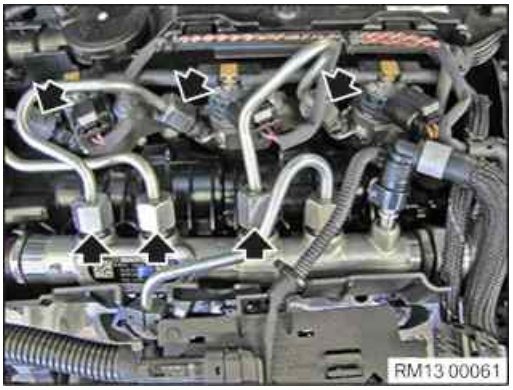

- Release the high pressure lines (arrows) with the special tool **0 495 910 (37 1 152)**.
- Feed out and remove the high pressure lines (arrows).
- Seal off all the open cable connections with the special tool **2 413 106**.

6 – Detach positive battery cable from alternator

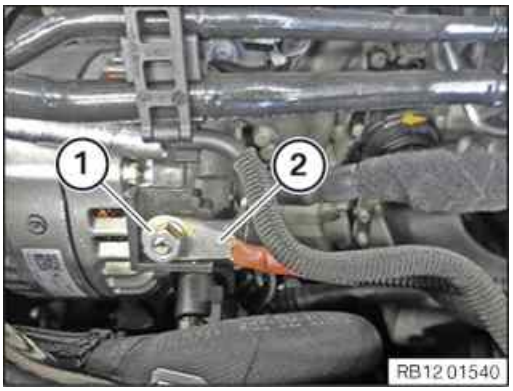

- Unfasten nut (1).
- Feed out the positive battery cable (2) from the alternator and place aside.

7 – Removing the cable clips from the intake plenum

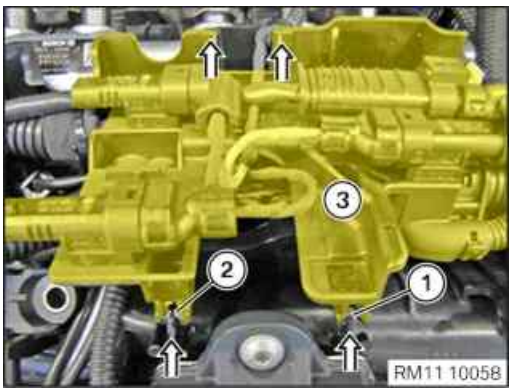

- Release the clips (1) and (2).
- Feed out the cable clip (3) in the direction of the arrow and set it aside.

8 – Remove high-pressure rail

WARNING

Working on fuel system.

Risk of fire! Danger of explosion!

- When working on the fuel system, make sure that the workbay is sufficiently ventilated, e.g. using extraction unit.
- Tightly seal off open lines and connections; collect any escaping fuel directly at the point of exit.
- No fire, sparks, open flames or smoking.

RISK OF DAMAGE

Contaminant or foreign body.

Contamination can result in malfunctions, operating failure or leaks.

- Adhere to the utmost cleanliness.
- Protect components from contamination e.g. by covering.
- Close off line connections with seal plugs.

TECHNICAL INFORMATION

Collect and dispose of emerging fluids. Observe country-specific waste disposal regulations.

TECHNICAL INFORMATION

Reset special tool in early to avoid bending pressure lines.

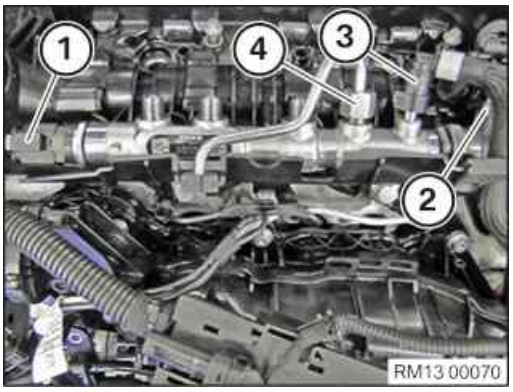

- Unlock and disconnect the plug connection (1).
- Unlock and disconnect the plug connection (2).
- Unlock and release fuel line (3).
- Loosen union nut (4) with special tool **0 495 910 (37 1 152)**.
- Reset special tool **0 495 910 (37 1 152)** early on to avoid bending pressure lines.

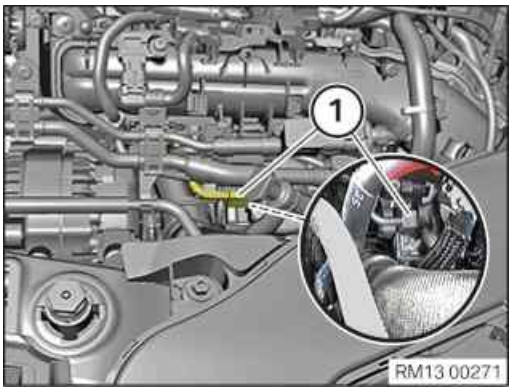

- Slacken the union nut (1) on the high pressure pump.

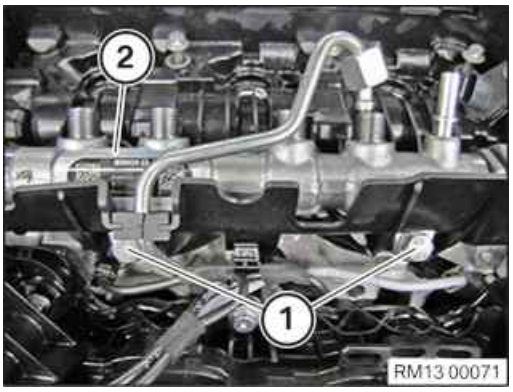

- Loosen screws (1).
- Carefully thread out and remove the rail (2).
- Make sure the pressure line of the high pressure pump is not bent.

MAIN WORK

9 – Remove rail pressure regulating valve

WARNING

Working on fuel system.

Risk of fire! Danger of explosion!

- When working on the fuel system, make sure that the workbay is sufficiently ventilated, e.g. using extraction unit.
- Tightly seal off open lines and connections; collect any escaping fuel directly at the point of exit.
- No fire, sparks, open flames or smoking.

RISK OF DAMAGE

Electrostatic discharge.

Damage to or destruction of electrical components.

- Leave electrical components in original packaging until just before they are installed. Use the original packaging only for any return shipments. Always package removed components straight away.
- Read and comply with user information on using the associated special tool 12 7 060.
- Only touch the housings of electrical components. Do not touch pins or multi-pin connectors directly.
- Wear electrically conductive clothing and antistatic shoes (with ESD symbol).
- For additional information see: 61 35 Information on electrostatic discharge (ESD) protection.

RISK OF DAMAGE

Contaminant or foreign body.

Contamination can result in malfunctions, operating failure or leaks.

- Adhere to the utmost cleanliness.
- Protect components from contamination e.g. by covering.
- Close off line connections with seal plugs.

TECHNICAL INFORMATION

Collect and dispose of emerging fluids. Observe country-specific waste disposal regulations.

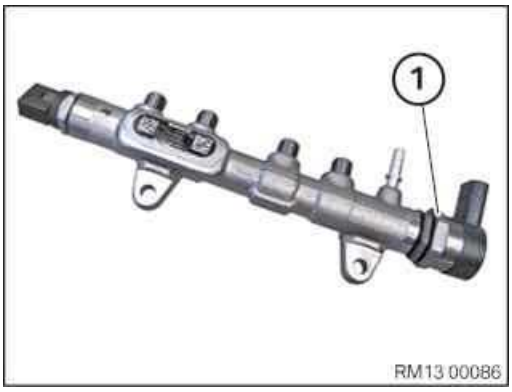

- Grip the removed rail on the flattened area.
- Observe the installation position on the rail pressure regulating valve (1) and mark, if applicable.
- Hold the rail at the hexagon head and unscrew and remove the rail pressure regulating valve (1).
- Catch and dispose of escaping fuel.

10 – Installing the rail pressure regulating valve

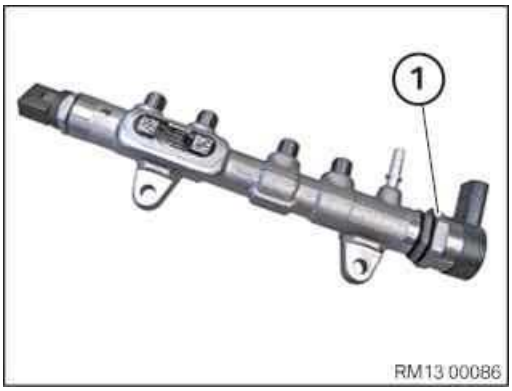

- Observe the installation position of the rail pressure regulating valve (1) or the self-made mark.
- Screw in the rail pressure regulating valve (1) by hand.
- Counter support the rail at the hexagon head and tighten the rail pressure regulating valve (1).

Rail pressure regulating valve to rail

	Initial tightening torque	80 Nm
	Release	90 °
	Tightening torque	85 Nm

POSTPROCESSES

11 – Installing the rail

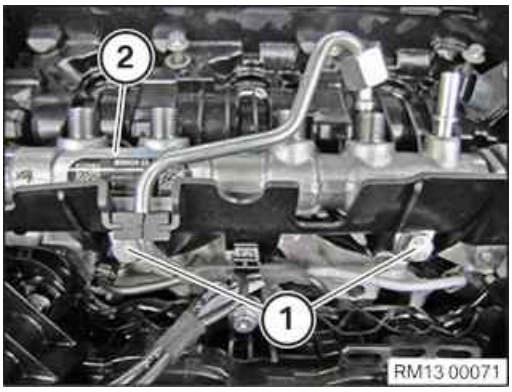

- Carefully insert and install the rail (2).
- Tighten the screws (1).

Rail on cylinder head cover

Torx screw M8x25		Tightening torque	19 Nm

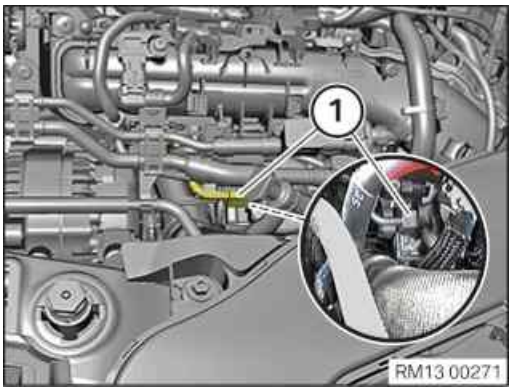

TECHNICAL INFORMATION

Renew high pressure lines when the tightening torque exceeds the maximum of 30 Nm.

- Tighten union nut (1).

High pressure line between high pressure pump and rail

High-pressure pipe		Tightening torque	28 Nm

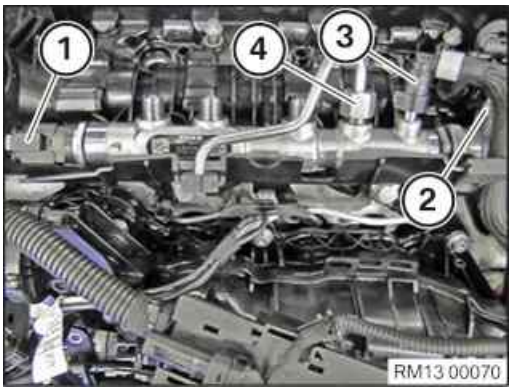

TECHNICAL INFORMATION

Renew high pressure lines when the tightening torque exceeds the maximum of 30 Nm.

TECHNICAL INFORMATION

Reset special tool in early to avoid bending pressure lines.

- Tighten union nut (4) with special tool **0 495 910 (37 1 152)**.

High pressure line between high pressure pump and rail

High-pressure pipe		Tightening torque	28 Nm

- Connect and lock fuel line (3).

  Fuel line (3) must engage audibly.
- Connect and lock the connector (2).

  The connector (2) must engage audibly.
- Connect and lock the connector (1).

  The connector (1) must engage audibly.

12 – Installing the cable clip for the intake plenum

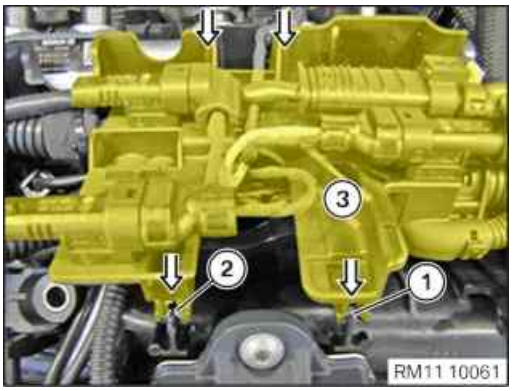

- Feed in and install the cable clip (3) in the direction of arrow.
- Engage clips (1) and (2).

13 – Fasten the positive battery cable on the alternator

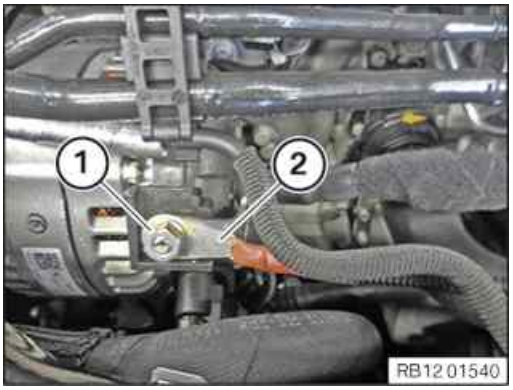

- Insert and install the positive battery cable (2) at the alternator.
- Tighten nut (1).

Positive battery cable to alternator

M8		Tightening torque	19 Nm

14 – Installing high pressure lines between rail and injectors

TECHNICAL INFORMATION

If several high pressure lines are removed, ensure that each high pressure line is re-installed in its original installation location. Mark high pressure lines.

TECHNICAL INFORMATION

Reset special tool in early to avoid bending pressure lines.

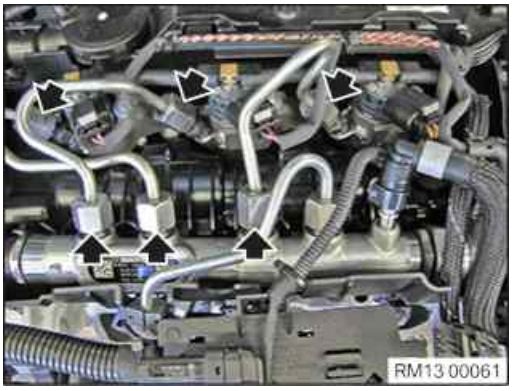

- Remove special tool **2 413 106**.
- Feed in and install the high pressure lines (arrows).
- Hand-tighten the high pressure lines (arrows).

TECHNICAL INFORMATION

Renew high pressure lines when the tightening torque exceeds the maximum of 30 Nm.

- Tighten the high pressure lines (arrows) with the special tool **0 495 910 (37 1 152)**.

High pressure lines between injector and rail

High pressure lines		Tightening torque	28 Nm

- Check the high pressure lines for tightness (**visual inspection**).

15 – Install the acoustic cover for the injectors

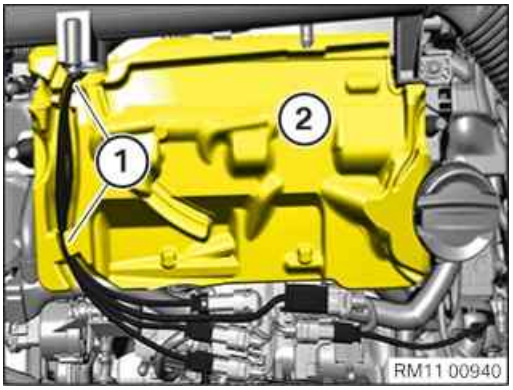

- Feed the acoustic cover (2) in and install.
- Fasten the wiring harness (1) to the brackets.

16 – Install resonator

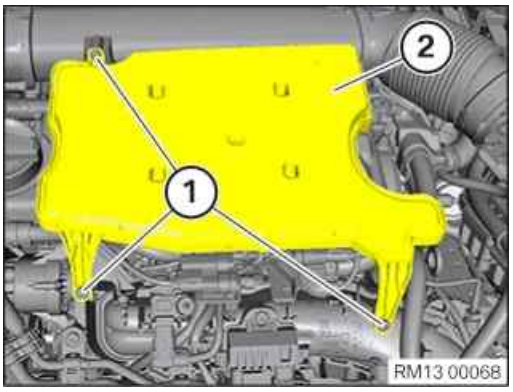

- Insert and install the resonator (2).
- Renew screws (1).

  Parts: Bolts
- Tighten the screws (1).

Resonator to manifold and clean air pipe

Screw TS6	Renew screw.	Tightening torque	5 Nm

17 – Install acoustic cover

RISK OF DAMAGE

Damage to the acoustic cover.

Jerky movements during disassembly and excessive application of force during installation may result in breakage of the acoustic cover.

- Disassemble or mount the acoustic cover carefully.
- Disassemble or mount snap-lock couplings of the ball pivots one after the other.
- Disassemble or mount acoustic cover only at temperatures >20 °C.
- Use only distilled water as an auxiliary material during installation, no lubricants.

- Check for correct installation of all rubber mounts in the acoustic cover (1).

- Clip in the acoustic cover into the holders in the indicated areas.
- Make sure that the acoustic cover engages audibly.

18 – Disconnecting all battery earth leads

- See additional information.

Additional Information

Overview of Tightening Torques

Rail pressure regulating valve to rail Used in step 10

	Initial tightening torque	80 Nm
	Release	90 °
	Tightening torque	85 Nm

Rail on cylinder head cover			Used in step 11
Torx screw M8x25		Tightening torque	19 Nm

High pressure line between high pressure pump and rail			Used in step 11
High-pressure pipe		Tightening torque	28 Nm

Positive battery cable to alternator			Used in step 13
M8		Tightening torque	19 Nm

High pressure lines between injector and rail			Used in step 14
High pressure lines		Tightening torque	28 Nm

Resonator to manifold and clean air pipe			Used in step 16
Screw TS6	Renew screw.	Tightening torque	5 Nm

Overview of Special Tools

0 495 910 (37 1 152) Socket wrench

Common	Used in step 5 8 11 14
Usage	(Socket wrench)SW19
Included in the tool or work	0 495 908
Storage location	B21
Replaced by	
In connection with	
SI-Number	01 01 07 (333)

2 413 106 Fastener

Common	Used in step 5 14
Usage	For avoiding contamination and damage of rail, injectors and high pressure pump.
Included in the tool or work	
Storage location	Individual
Replaced by	
In connection with	
SI-Number	01 16 16 (419)

Links

Repair instructions	Used in step
61 20 900 Disconnecting and connecting battery earth lead	1 18
61 20 900 Disconnecting and connecting battery earth lead	1 18
61 20 900 Disconnecting and connecting battery earth lead	1 18
61 20 900 Disconnecting and connecting battery earth lead	1 18
61 20 900 Disconnecting and connecting battery earth lead	1 18
61 20 900 Disconnecting and connecting battery earth lead	1 18
61 20 900 Disconnecting and connecting the battery earth lead (all battery earth leads)	1 18

13 53 180 Replacing the pressure line between the high-pressure pump and pressure accumulator (B37, B47)

Special tools required:

- 37 1 152
- 2 413 106

Attention!

When working on the fuel circuit, you must protect the alternator against dirt contamination.

Cover alternator with suitable materials.

Failure to comply with this procedure may result in an alternator malfunction.

Attention!

After the engine has stopped, wait at least 1 minute before releasing the high-pressure lines.

After disconnecting the pressure line, it is absolutely essential to seal the openings in the high pressure pump and the pressure accumulator with protective caps2 413 106 .

Recycling:

Catch and dispose of escaping fuel.

Observe country-specific waste disposal regulations.

Necessary preliminary tasks:

- Remove intake plenum.

Removal:

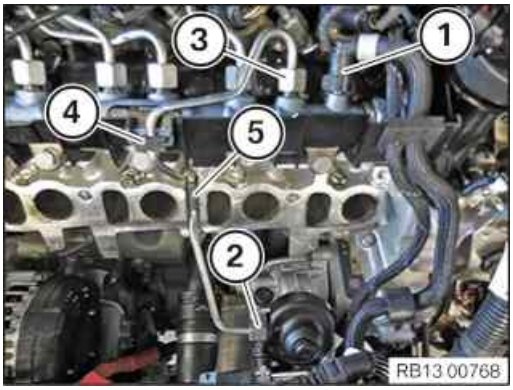

Unlock and release fuel line (1).

Release union nuts (2) and (3) on pressure line with special tool 37 1 152

Reset special tool in good time in order to avoid bending high pressure line.

Feed pressure line out of the rubber mount (4) and (5) and remove.

Installation:

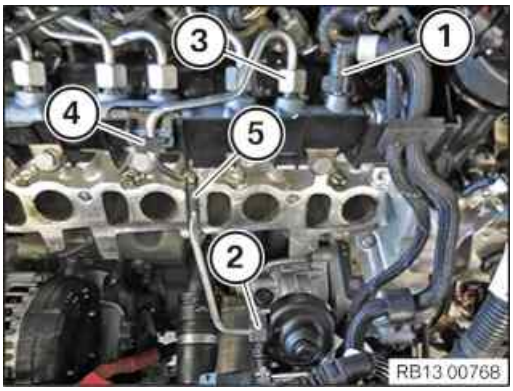

Installation note:

- Install pressure line and tighten hand-tight at both ends.
- First tighten pressure line at pressure accumulator (3).
  Tightening torque 13 53 2AZ.
- Then apply pressure line to high pressure pump (2).
  Tightening torque 13 53 2AZ.
  Connect and lock fuel line (1).
  Fuel line (1) must audibly engage.

Installation note:
Pay attention to installation position of rubber mount (5) and abrasion protection (4) on pressure line.

Required follow-up work:

- Install intake plenum.

13 54 030 Remove and install/seal throttle body

WARNING

Hot surfaces.

Risk of burning!

- Perform all work only on components that have cooled down.

PRELIMINARY WORK

1 – Remove the intake neck for intake silencer housing

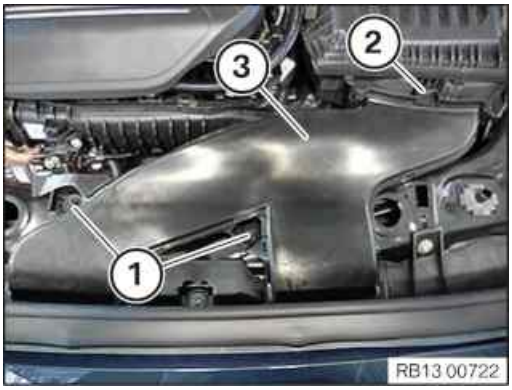

- Loosen nuts (1).
- Loosen the lock (2).
- Guide the intake neck (3) out and remove it.

2 – Removing intake silencer housing

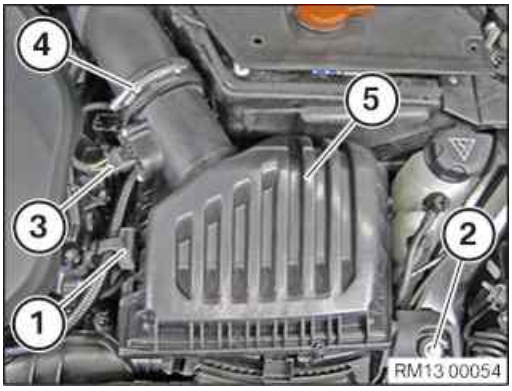

- Loosen the holder (1).
- Loosen screw (2).
- Unlock and loosen connector (3).
- Unfasten clamp (4).
- Pull out and remove the intake silencer housing (5) from the rubber mounts towards the top.

MAIN WORK

3 – Removing the throttle body

WARNING

Hot surfaces.

Risk of burning!

- Perform all work only on components that have cooled down.

RISK OF DAMAGE

Electrostatic discharge.

Damage to or destruction of electrical components.

- Leave electrical components in original packaging until just before they are installed. Use the original packaging only for any return shipments. Always package removed components straight away.
- Read and comply with user information on using the associated special tool 12 7 060.
- Only touch the housings of electrical components. Do not touch pins or multi-pin connectors directly.
- Wear electrically conductive clothing and antistatic shoes (with ESD symbol).
- For additional information see: 61 35 Information on electrostatic discharge (ESD) protection.

- Unlock the lock (1).
- Let the lock (1) engage at the holder (arrow).

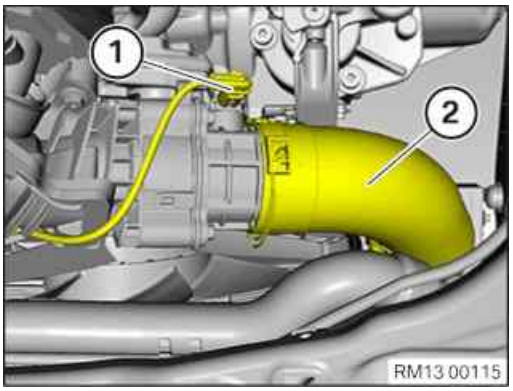

- Unlock and disconnect connector (1).
- Unlock and disconnect the pressure pipe (2).
- Remove the pressure pipe (2) and put to one side.

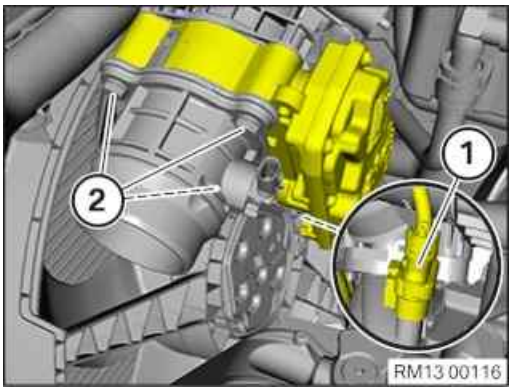

- Unlock and disconnect connector (1).
- Loosen screws (2).
- Feed out and remove the throttle body.

4 – Replacement: remount air duct

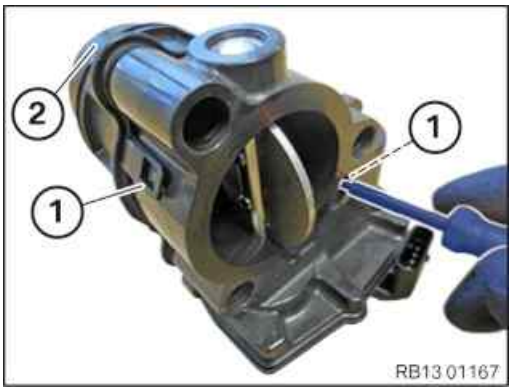

- Unlock and loosen the locks (1).
- Remove the air duct (2).

- Renew sealing ring (1).

  Parts: Sealing ring

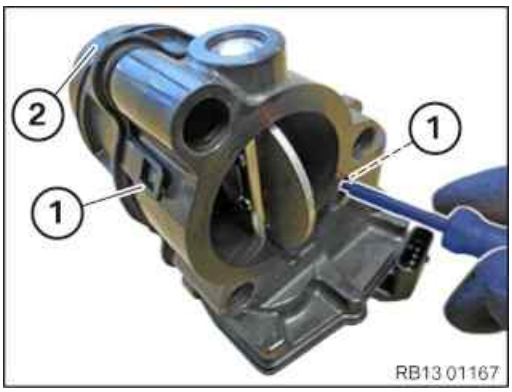

- Mount the air duct (2) to the new throttle valve.

  The locks (1) must engage audibly.

5 – Installing the throttle body

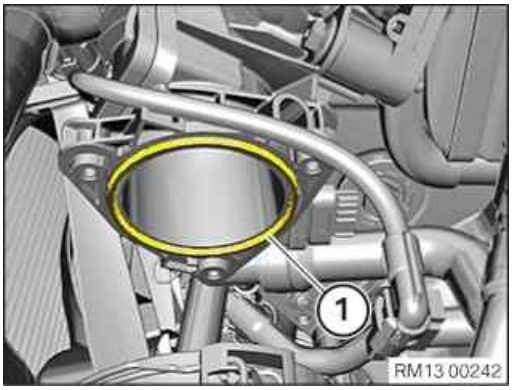

- Renew the sealing ring (1) on the intake plenum .

  Parts: Sealing ring

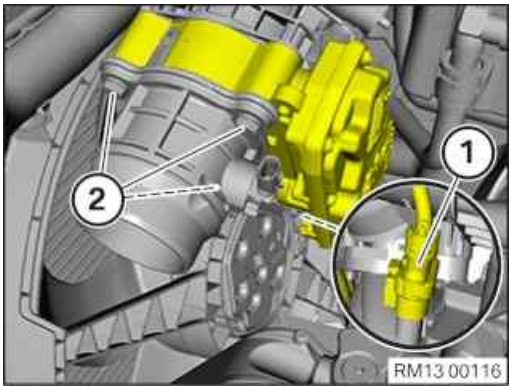

- Feed in and install the throttle body .
- Tighten the screws (2).

Throttle body to intake plenum

6x50		Tightening torque	7 Nm

- Connect connectors (1) and lock.

  The connector (1) must engage audibly.

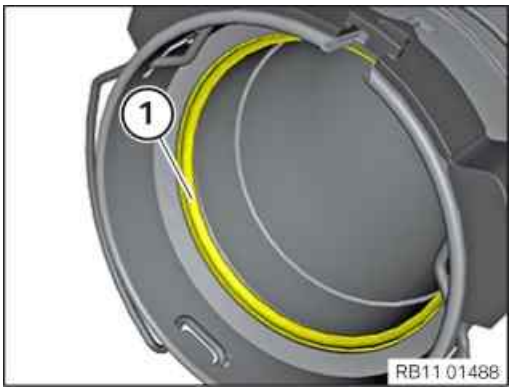

- Check seal (1) for damage and renew seal (1) as needed.

  Parts: Gasket

▶ **Replace damaged gasket**

TECHNICAL INFORMATION

Do not use pointed or sharp-edged tools for the installation and/or removal.

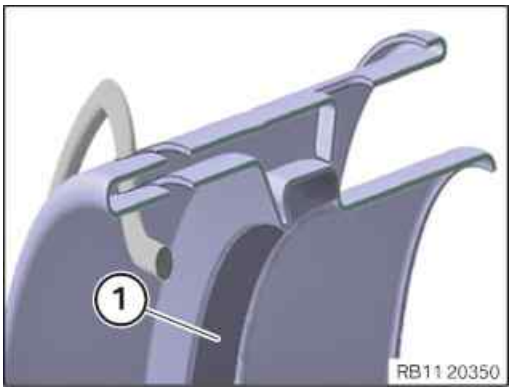

- Remove damaged seal.
- Clean gasket groove (1) with a dry towel.

  The gasket groove (1) must be clean.

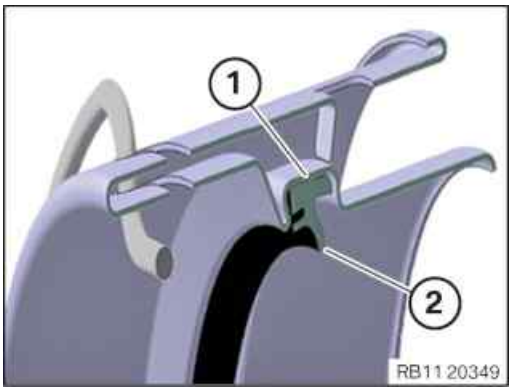

- Renew gasket.

  Parts: Gasket
- Install seal dry without lubricant or mounting agent.

TECHNICAL INFORMATION

Incorrect assembly is possible. Ensure correct installation position.

- Feed in and install the seal.
- Make sure the seal is correctly installed in the gasket groove (1).
- Make sure that the sealing lip (2) is pointing downwards (see figure).

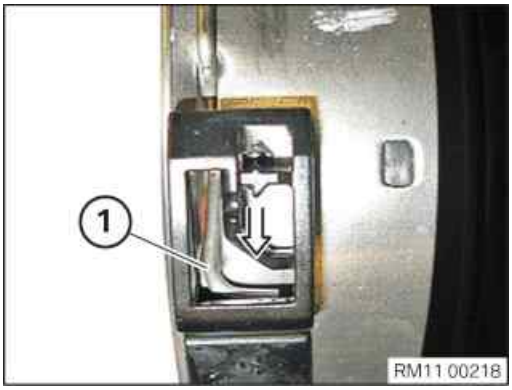

- Detach the locks (1) in the direction of the arrow from the brackets.

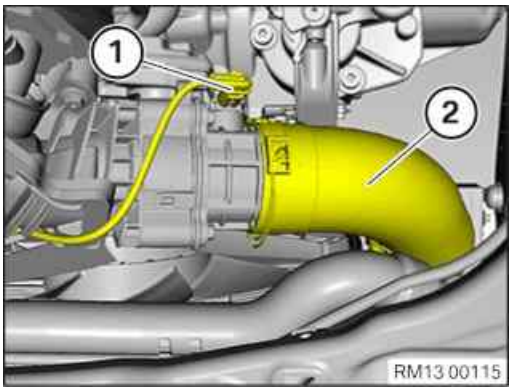

- Connect the pressure pipe (2) and lock.

  The pressure pipe (2) must engage audibly.
- Connect connectors (1) and lock.

  The connector (1) must engage audibly.

POSTPROCESSES

6 – Installing intake silencer housing

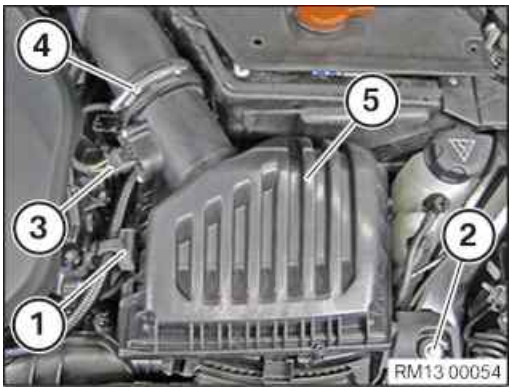

- Insert the intake silencer housing (5) into the rubber mounts and install it.

  Intake filter housing (5) must engage audibly.
- Tighten down screw (2).

Intake silencer housing to lock bridge

M6X30		Tightening torque	8 Nm

- Tighten clamp (4).

Clean air pipe to intake silencer housing

Clamp		Tightening torque	3 Nm

- Connect and lock the connector (3).

  The connector (3) must engage audibly.
- Insert and install the holder (1).

7 – Install the intake neck for the intake filter housing

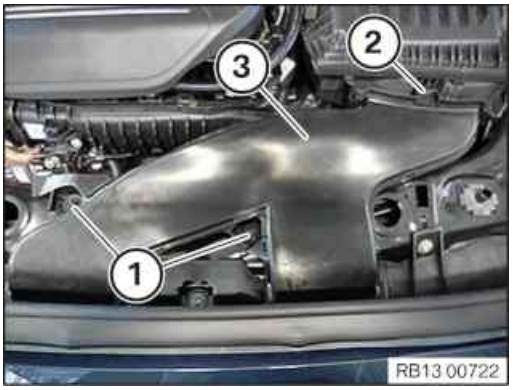

- Insert and install the intake neck (3).

  The lock (2) must audibly engage.
- Tighten nuts (1).

Intake neck to cross connection

M6		Tightening torque	8 Nm

Additional Information

Overview of Tightening Torques

Throttle body to intake plenum Used in step 5

6x50		Tightening torque	7 Nm

Intake silencer housing to lock bridge Used in step 6

M6X30		Tightening torque	8 Nm

Clean air pipe to intake silencer housing Used in step 6

Clamp		Tightening torque	3 Nm

Intake neck to cross connection Used in step 7

M6		Tightening torque	8 Nm

Links

Repair instructions	Used in step
61 35 ... Notes on ESD protection (Electro Static Discharge)	3

13 54 030 Removing and installing/sealing the throttle body (B47,B37)

[redacted]

Important!

Read and comply with notes on protection against electrostatic discharge (ESD protection).

[redacted]

Necessary preliminary tasks:

- Remove intake filter housing

[redacted]

Removal:

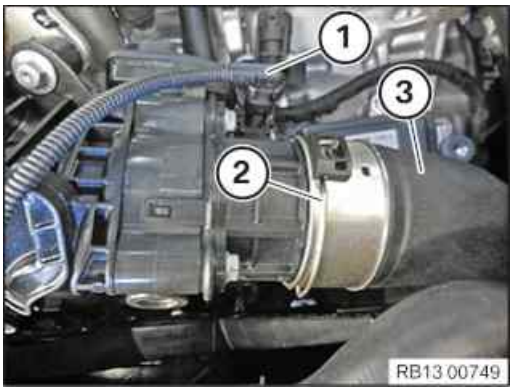

Unlock connector (1) at the charge-air temperature sensor and pull off.

Release lock (2).

Release pressure pipe (3) and lay to one side.

Unlock connector (1) on throttle valve and pull off.

Unfasten screws (2).

Remove throttle valve

[redacted]

Installation:

Installation note:
Remount air duct (1) only when replacing the throttle valve.

Replace sealing ring between throttle valve and air duct.

Part: Sealing ring.

Replace sealing ring between throttle valve and intake plenum.

Part: Sealing ring.

Install throttle valve and tighten down screws (2).

Tightening torque 13 54 1AZ.

Attach connector (1) to throttle valve.

Connector (1) must snap audibly into place.

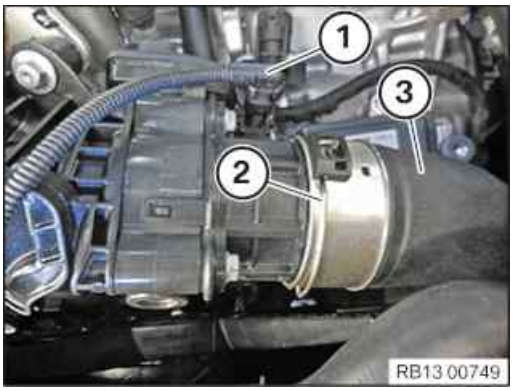

Attach connector (1) to charge-air temperature sensor.

Connector (1) must snap audibly into place.

Connect pressure pipe (3) to throttle body.

Lock (2) must snap audibly into place.

Required follow-up work:

- Install intake silencer housing

13 61 501 Replace control unit

WARNING

Working on 12 V vehicle electrical system.

Risk of short circuits! Risk of fire!

- Detach battery earth lead from battery.
- For additional batteries: Detach all battery earth leads from additional batteries.

PRELIMINARY WORK

1 – Disconnecting all battery earth leads

- See additional information.

2 – Remove the seal for the rear bonnet

NOTICE

Schematic diagram is for example purposes. Some parts may differ in certain details.

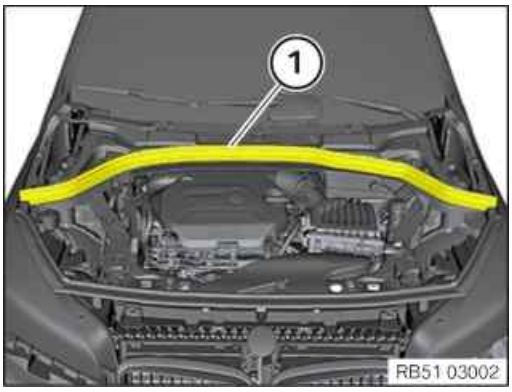

- Pull off rear bonnet seal (1) towards the top and remove.

3 – Removing front cowl panel cover

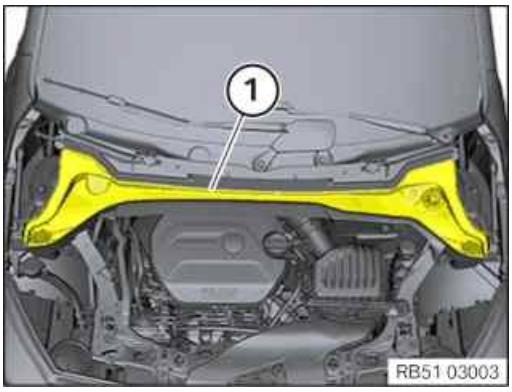

- Guide the front cowl panel cover (1) out toward the top and remove it.

4 – Removing the upper bulkhead cover

- Loosen screws (1).

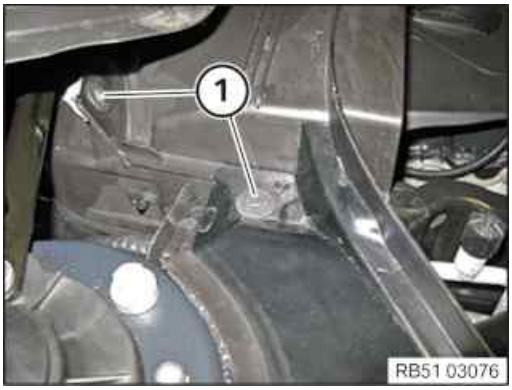

- Loosen screws (1).

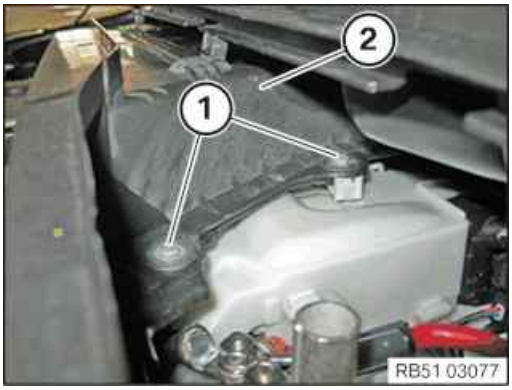

- Loosen screws (1).
- Feed out and remove the upper bulkhead cover (2).

5 – Remove the intake neck for intake silencer housing

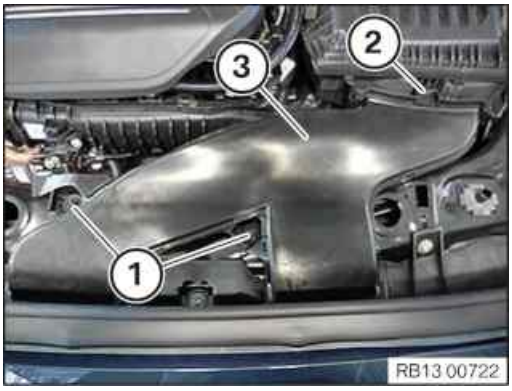

- Loosen nuts (1).
- Loosen the lock (2).
- Guide the intake neck (3) out and remove it.

6 – Removing intake silencer housing

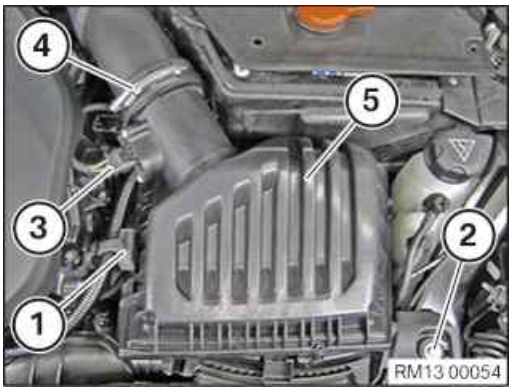

- Loosen the holder (1).
- Loosen screw (2).
- Unlock and loosen connector (3).
- Unfasten clamp (4).
- Pull out and remove the intake silencer housing (5) from the rubber mounts towards the top.

MAIN WORK

7 – Remove DDE control unit

Prerequisite

Disconnect battery.

RISK OF DAMAGE

Electrostatic discharge.

Damage to or destruction of electrical components.

- Leave electrical components in original packaging until just before they are installed. Use the original packaging only for any return shipments. Always package removed components straight away.
- Read and comply with user information on using the associated special tool 12 7 060.
- Only touch the housings of electrical components. Do not touch pins or multi-pin connectors directly.
- Wear electrically conductive clothing and antistatic shoes (with ESD symbol).
- For additional information see: 61 35 Information on electrostatic discharge (ESD) protection.

RISK OF DAMAGE

Damage to wires when disconnecting connectors and plug connections.

Sheared wires can cause a short circuit.

- Do not pull on the wires when disconnecting connectors and plug connections.

TECHNICAL INFORMATION

Follow instructions for removing and installing control units.

For additional information see: 12 00 ... Notes on removal and installation of control units

TECHNICAL INFORMATION

In a warranty case, you must always provide a fault memory printout with the defective part, even if the fault memory does not contain an entry.

TECHNICAL INFORMATION

Disconnecting control units may cause fault code entries and functional limitations. Fault code entries must be read out and deleted if necessary.

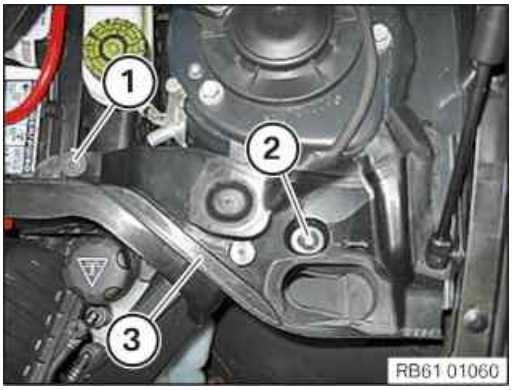

- Release the screw (1) and the expanding rivet (2).
- Remove the fixture for the gasket (3).

- Loosen screw (1).
- Place cover (2) of the positive battery connection point to one side.

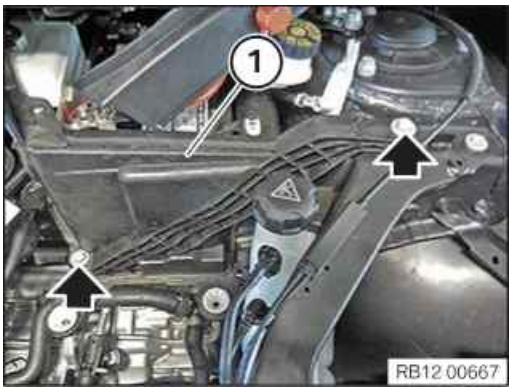

- Remove screws (arrows).
- Guide out tension strut (1) and remove.

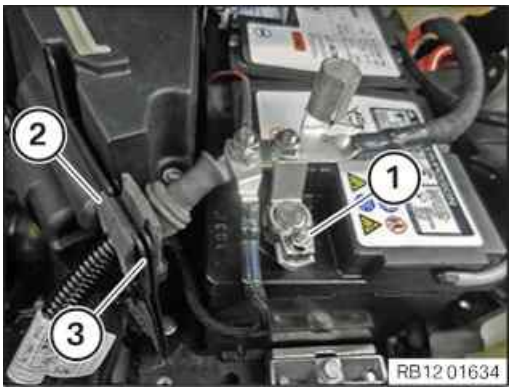

- Undo positive battery terminal (1).
- Feed out positive battery terminal (1) and set aside.
- Guide the positive battery cable (2) out of the holder (3) and lay to one side.

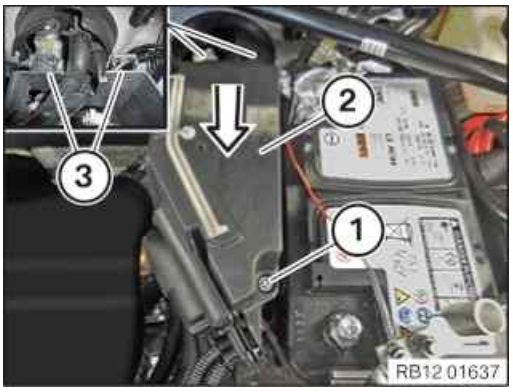

- Loosen screw (1).
- Unlock cover (2) and feed out and remove from the guides (3) in the direction of arrow.

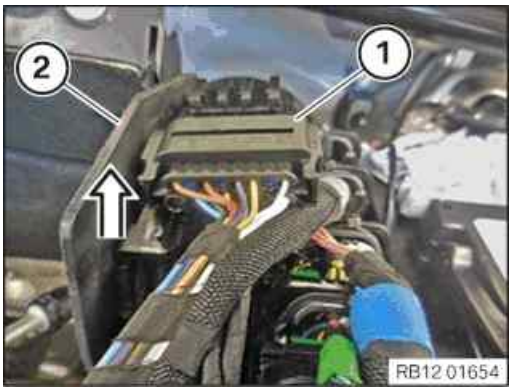

- Feed out connector (1) from the electronics box (2) and remove in the direction of arrow.
- Unlock and loosen connector (1).

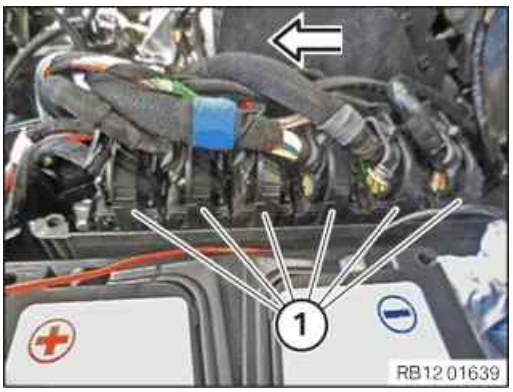

- Unlock and remove the connector (1) in the direction of the arrow.
- Feed out connector (1) and place to one side.

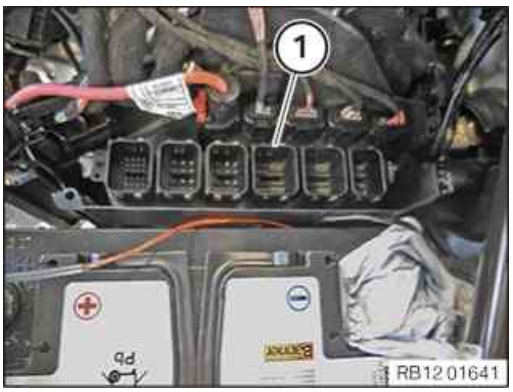

- Thread out and remove DDE control unit (1) toward the top.

8 – Install DDE control unit

Prerequisite

Disconnect battery.

RISK OF DAMAGE

Improper routing of cables and wiring harnesses.

Trapped, crushed or damaged cables may cause short circuits and malfunctions.

- Route all cables without abrasions, do not trap and crush.

TECHNICAL INFORMATION

In a warranty case, you must always provide a fault memory printout with the defective part, even if the fault memory does not contain an entry.

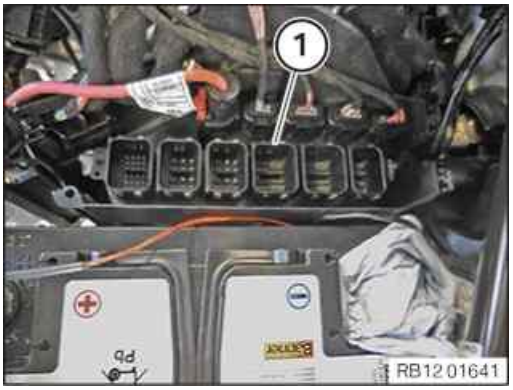

- Install DDE control unit(1).

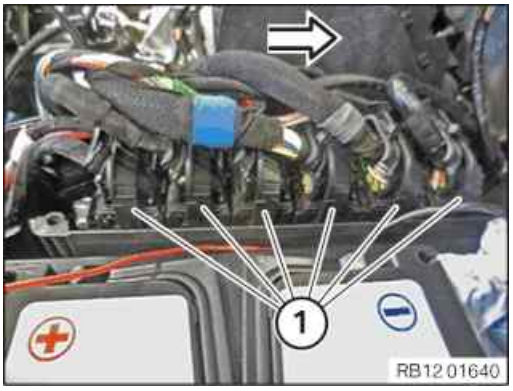

- Connect connector (1) in direction of arrow and lock.
- Make sure the connectors (1) engage audibly.

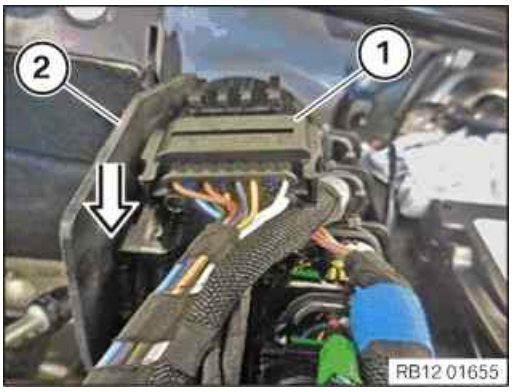

- Connect and lock the connector (1).
- Make sure the connector (1) engages audibly.
- Insert the connector (1) in the direction of arrow at the electronics box (2) and install.

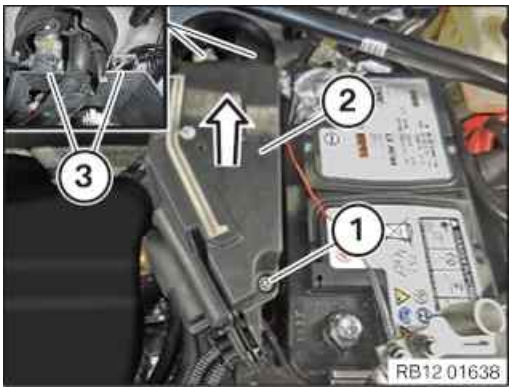

- Insert the cover (2) into the guides (3) in the direction of arrow and install.
- Make sure the cover audibly engages (2) in the guides (3).
- Tighten down screw (1).

Cover to electronics box

RF5x26.5		Tightening torque	2,5 Nm

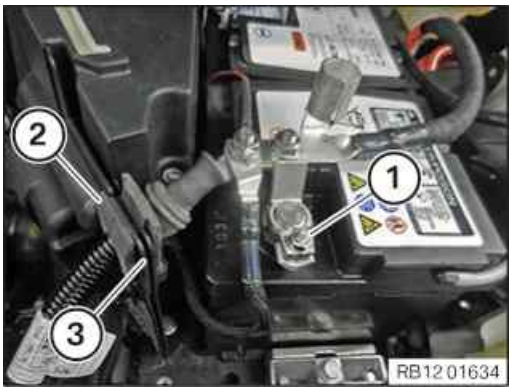

- Thread in positive battery cable (2) on holder (3) and install.
- Feed in and install positive battery terminal (1).
- Tighten positive battery terminal (1).

Positive battery terminal to battery

NutM6		Tightening torque	5 Nm

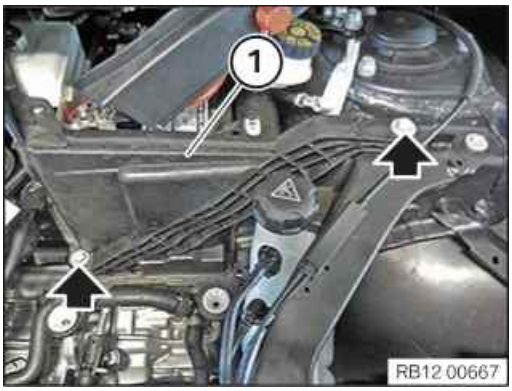

- Feed in and install tension strut (1).
- Tighten screws (arrows).

Tension strut to spring strut dome/battery tray

M8		Tightening torque	19 Nm

- Feed in and install cover (2) at the positive battery connection point.
- Tighten down screw (1).

Positive battery connection point cover to engine compartment partition wall

		Tightening torque	3 Nm

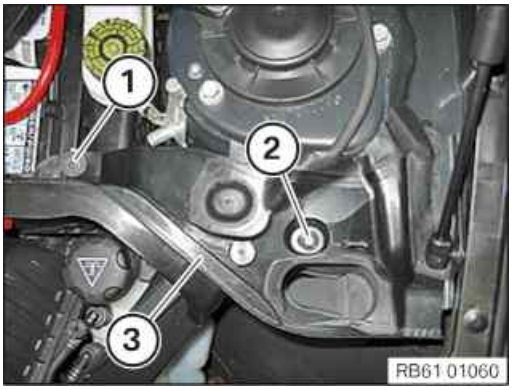

- Position the fixture for the gasket (3) and secure with the expanding rivet (2).
- Tighten down screw (1).

Battery cover

Screw			2,8 Nm

POSTPROCESSES

9 – Installing intake silencer housing

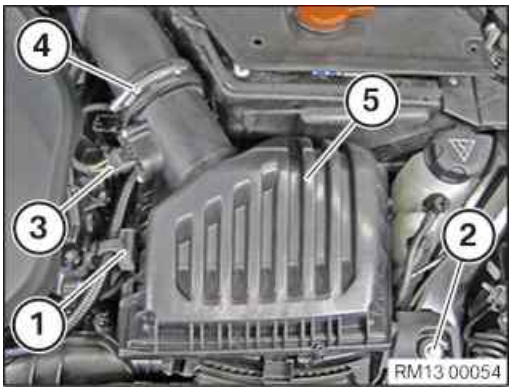

- Insert the intake silencer housing (5) into the rubber mounts and install it.

  Intake filter housing (5) must engage audibly.
- Tighten down screw (2).

Intake silencer housing to lock bridge

M6X30		Tightening torque	8 Nm

- Tighten clamp (4).

Clean air pipe to intake silencer housing

Clamp		Tightening torque	3 Nm

- Connect and lock the connector (3).

  The connector (3) must engage audibly.
- Insert and install the holder (1).

10 – Install the intake neck for the intake filter housing

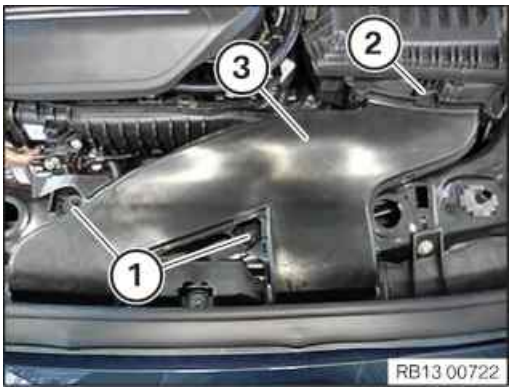

- Insert and install the intake neck (3).

  The lock (2) must audibly engage.
- Tighten nuts (1).

Intake neck to cross connection

M6		Tightening torque	8 Nm

11 – Installing the upper bulkhead cover

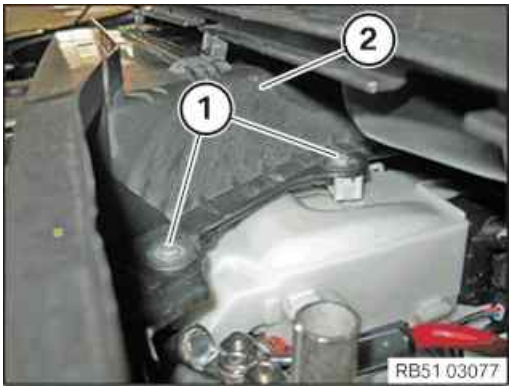

- Feed in and install cover (2) of the bulkhead at the top.
- Tighten the screws (1).

Bulkhead cover, top

Screw		Tightening torque	3 Nm

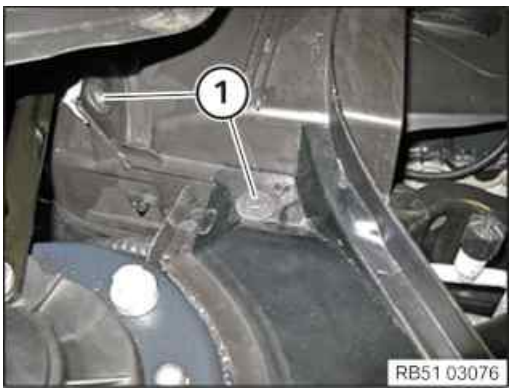

- Tighten the screws (1).

Bulkhead cover, top

Screw		Tightening torque	3 Nm

- Tighten the screws (1).

Bulkhead cover, top

Screw		Tightening torque	3 Nm

12 – Installing front cowl panel cover

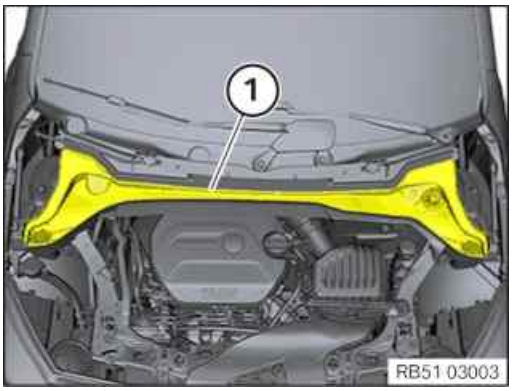

- Insert the cowl panel cover front (1) to the rear and install.
- Check cowl panel cover at front is correctly seated (1).

13 – Install the seal for the bonnet

NOTICE

Schematic diagram is for example purposes. Some parts may differ in certain details.

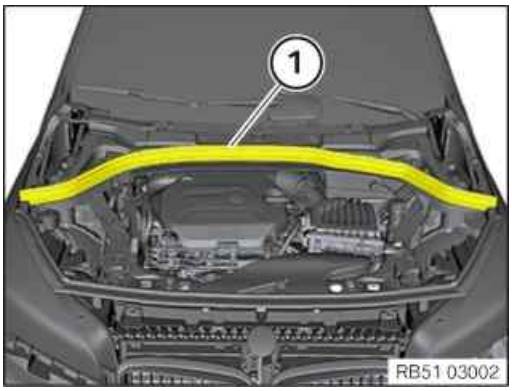

- Install bonnet seal at rear (1).
- Ensure that the rear bonnet seal (1) is fitted correctly.

14 – Disconnecting all battery earth leads

- See additional information.

15 – Replacement: Encode the DDE control unit

▶ **Encode/program control unit(s)**

Prerequisite

Replacement of the control unit.

TECHNICAL INFORMATION

Use the most recent software version to prevent faults during programming/encoding.

The battery voltage must not fall below 13.0 V during programming.

Use only chargers for a low volt-vehicle electrical system that are recommended by BMW.

TECHNICAL INFORMATION

No high-voltage switch off is required in electric vehicles or hybrid vehicles for programming/encoding.

The high-voltage system will be automatically switched off by the programming system.

Exception:

BMW I01: Note Product and Measures Management Aftersales measure 55176388.

- Connect the battery charger to the vehicle.
- Connect the programming system with the vehicle.
- Determine the action plan.
- Accept and fully process the measures plan.
- If applicable, connect the workshop system to the vehicle, depending on the reworking list.
- Carry out vehicle test.
- Delete the fault memory.
- The information about programming the workshop system and the corresponding notes in the user documentation must be observed.
- Wait until programming/encoding has been completed.
- Disconnect the programming system from the vehicle.
- Disconnect the battery charger from the vehicle.

▶ **Replacement: Perform injection quantity compensation**

TECHNICAL INFORMATION

If the DDE control unit or an injector has been replaced, it will also be necessary to carry out injection quantity compensation. The adjustment value (7-position letter/number code) is engraved on each injector.

NOTICE

Schematic diagram is for example purposes. Some parts may differ in certain details.

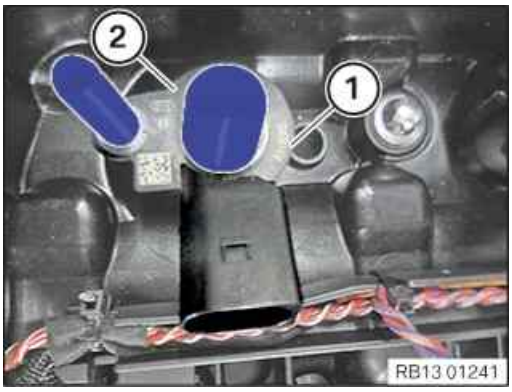

- Read off the adjustment value (1) on the new injector (2).

- Connect diagnosis system:
  - Vehicle identification
  - Function selection
  - Service functions
  - Digital diesel electronics (DDE)
  - Adjustment of injectors
  - Testing schedule
- Start service function with the right arrow button.

Additional Information

Overview of Tightening Torques

Cover to electronics box			Used in step 8
RF5x26.5		Tightening torque	2,5 Nm

Positive battery terminal to battery			Used in step 8
NutM6		Tightening torque	5 Nm

Tension strut to spring strut dome/battery tray			Used in step 8
M8		Tightening torque	19 Nm

Positive battery connection point cover to engine compartment partition wall			Used in step 8
		Tightening torque	3 Nm

Battery cover			Used in step 8
Screw			2,8 Nm

Intake silencer housing to lock bridge			Used in step 9
M6X30		Tightening torque	8 Nm

Clean air pipe to intake silencer housing			Used in step 9
Clamp		Tightening torque	3 Nm

Intake neck to cross connection			Used in step 10
M6		Tightening torque	8 Nm

Bulkhead cover, top			Used in step 11
Screw		Tightening torque	3 Nm

Links

General repair instructions	Used in step
12 00 ... Instructions for removal and replacement of control units	7 8

Repair instructions	Used in step
61 20 900 Disconnecting and connecting battery earth lead	1 14
61 20 900 Disconnecting and connecting battery earth lead	1 14
61 20 900 Disconnecting and connecting battery earth lead	1 14
61 20 900 Disconnecting and connecting battery earth lead	1 14
61 20 900 Disconnecting and connecting battery earth lead	1 14
61 20 900 Disconnecting and connecting battery earth lead	1 14
61 20 900 Disconnecting and connecting the battery earth lead (all battery earth leads)	1 14
61 20 900 Disconnecting and connecting the battery earth lead (all battery earth leads)	1 14
61 20 900 Disconnecting and connecting battery earth lead	1 14
61 20 900 Disconnecting and connecting the battery earth lead (all battery earth leads)	1 14
61 20 900 Disconnect and connect battery earth lead (Plug-in Hybrid Electric Vehicle)	1 14
61 20 900 Disconnecting and connecting battery earth lead	1 14
61 20 900 Disconnecting and connecting battery earth lead	1 14
61 20 900 Disconnecting and connecting battery earth lead	1 14
61 20 900 Disconnecting and connecting battery earth lead	1 14
61 20 900 Disconnecting and connecting battery earth lead	1 14
61 20 900 Disconnecting and connecting battery earth lead	1 14
61 20 900 Disconnecting and connecting battery earth lead	1 14
61 20 900 Disconnecting and connecting battery earth lead	1 14
61 20 900 Disconnecting and connecting battery earth lead	1 14
61 20 900 Disconnecting and connecting the battery earth lead (all battery earth leads)	1 14
61 20 900 Disconnecting and connecting battery earth lead	1 14
61 20 900 Disconnecting and connecting battery earth lead	1 14
61 20 900 Disconnecting and connecting battery earth lead	1 14
61 20 900 Disconnecting and connecting battery earth lead	1 14
61 20 900 Disconnecting and connecting battery earth lead	1 14
61 20 900 Disconnecting and connecting battery earth lead	1 14
61 13 ... Unlocking and disconnecting different plug connections	7
61 35 ... Notes on ESD protection (Electro Static Discharge)	7

13 61 600 Replace DDE control unit

Attention!

Read and comply with notes on protection against electrostatic damage (ESD protection).

Necessary preliminary work:

- Switch off the ignition
- Remove vehicle battery
- Remove upper bulkhead cover

Attention!

Wire harness connectors must be **always** plugged in or be properly covered to prevent moisture penetrating into the connector strip on the engine control unit.

Attention!

Follow instructions for removing and installing control units

The fault memory must be read out using the diagnosis system, and a fault memory printout made.

Replacement:

- Carry out programming/encoding
- If no data can be read out from the previous control unit, carry out injection quantity compensation (description at end of instruction).

Removal:

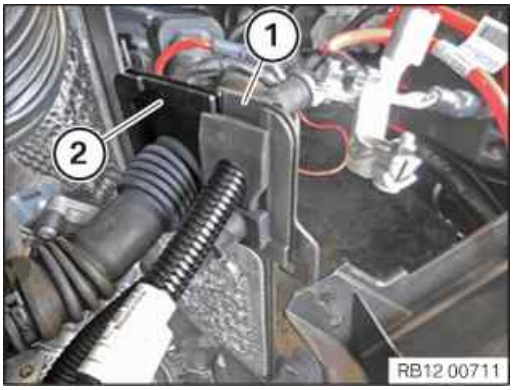

Remove cable (1) from cable clip (2).

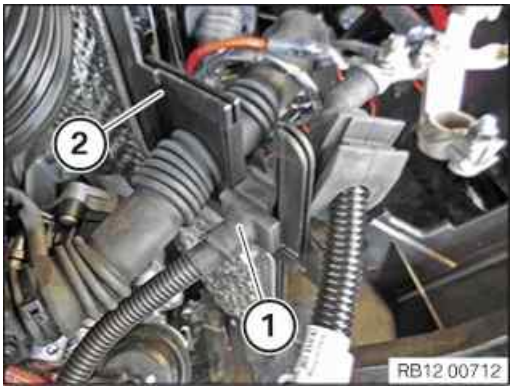

Remove cable (1) from cable clip (2).

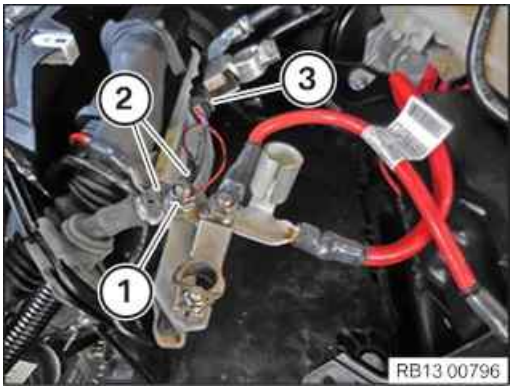

Slacken nut (1).
Feed out cables (2) and (3) and lay to one side.
Unlock and disconnect plugs (3).

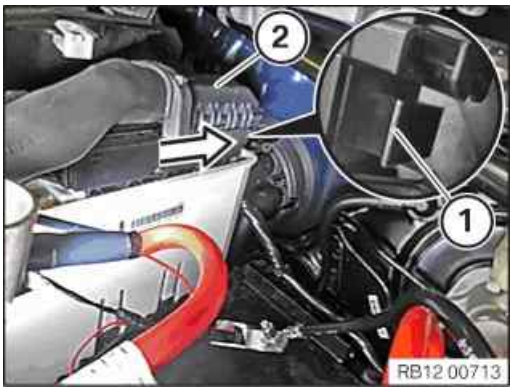

Undo lock (1) as shown by arrow.
Remove connector (2).

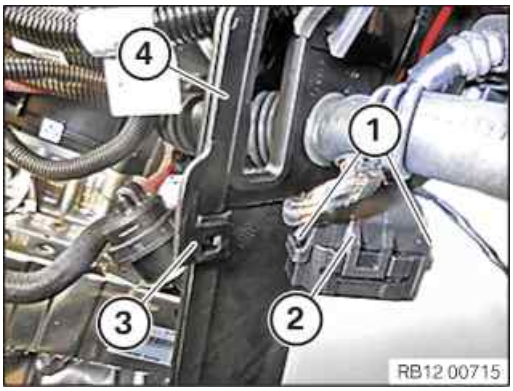

Release lock (1).
Remove connector (2).
Release lock (3).
Lay cable clip (4) with connector to one side.

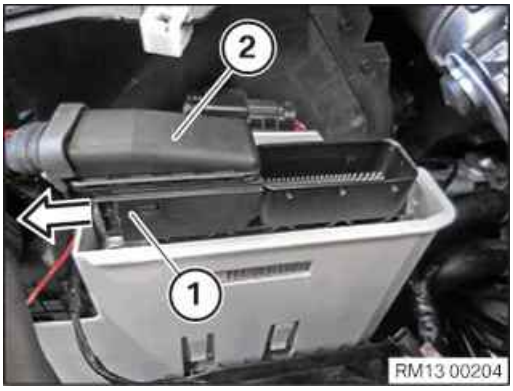

Release lock (1) in direction of arrow.

Disconnect connector (2) from the DDE control unit.

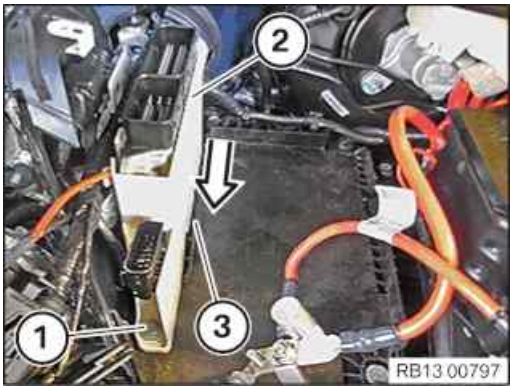

Loosen screw (1).

Loosen the equipment holder (2) in the direction of arrow from the battery plate (3) and pull it a bit towards the front.

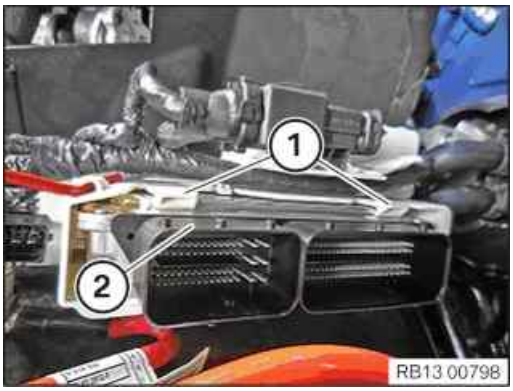

Unlock locks (1) and pull out and remove the DDE control unit (2) in upward direction.

Installation:

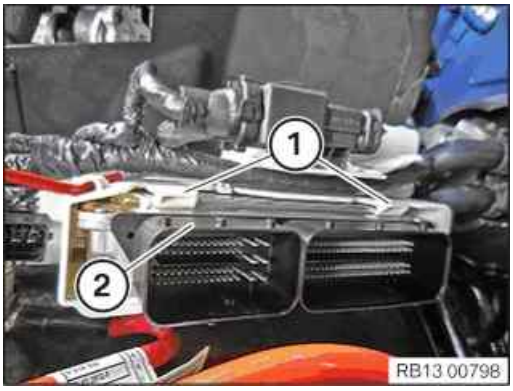

Insert the DDE control unit (2) in the bracket. Ensure that the locks (1) on the DDE control unit (2) engage.

Insert the equipment holder (2) in the direction of arrow at the rear in the battery plate (3).

Tighten screw (1).

Tightening torque 12 90 1AZ.

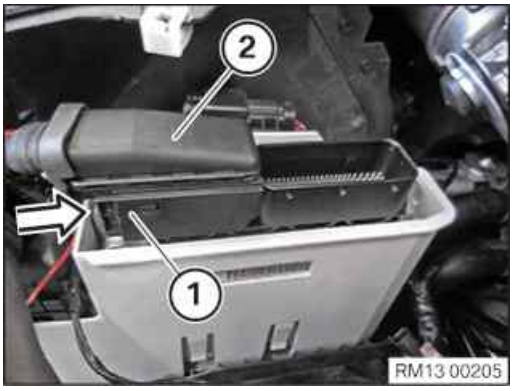

First, connect the front connector (2) to the DDE control unit.

Mount the connector (2) with pulled-out lock (1) on the DDE control unit.

Then lock the lock (1) in direction of arrow.

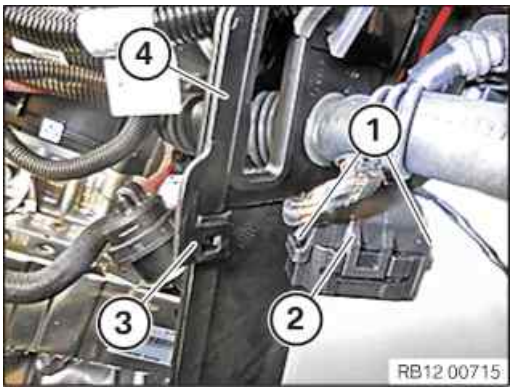

Connect connector (2) and lock.

Lock (1) must snap audibly into place.

Feed in and install the cable clip (4).

Lock (3) must snap audibly into place.

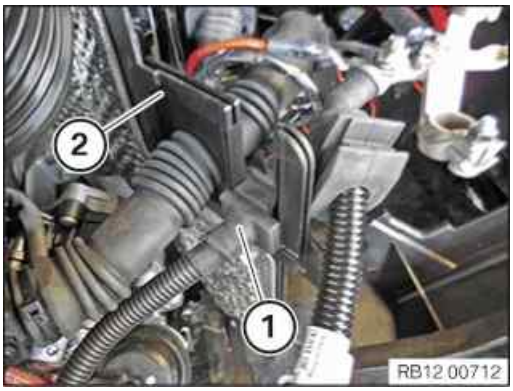

Feed cable (1) into the cable clip (2) and install.

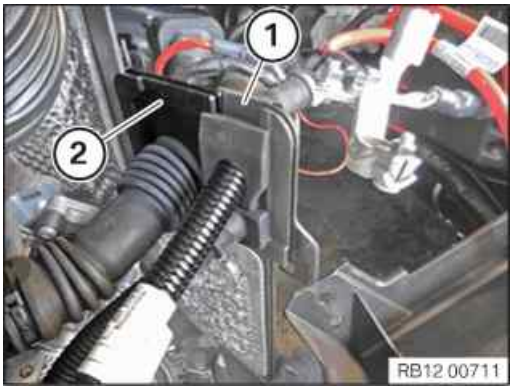

Feed cable (1) into the cable clip (2) and install.

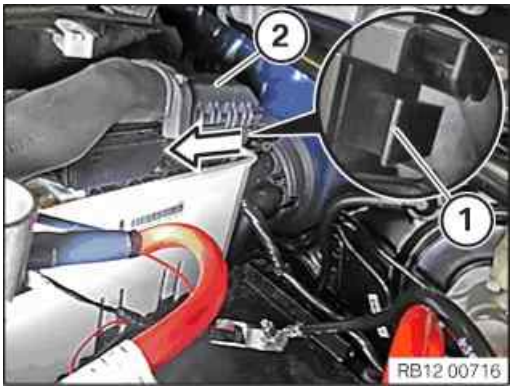

Fit connector (2).

Engage the lock (1) as shown by arrow.

Lock (1) must snap audibly into place.

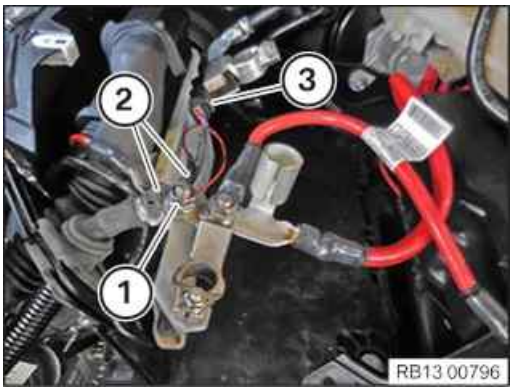

Feed in and install cables (2) and (3).

Tighten nut (1).

Tightening torque 12 52 6AZ.

Connect and lock the connector (3) of the negative battery terminal.

Connector (3) must engage audibly.

- Install vehicle battery

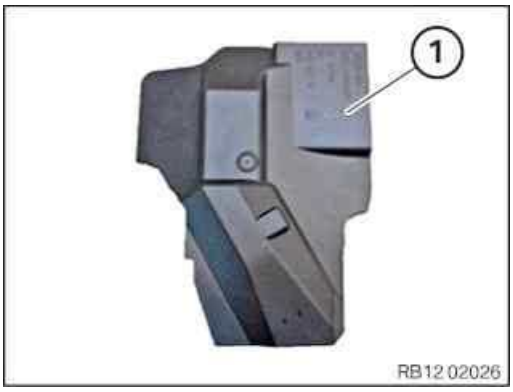

Only F45, F46:

On vehicles with a water ingress in the DDE connector, a cover (1) must be retrofitted to protect the DDE connector.

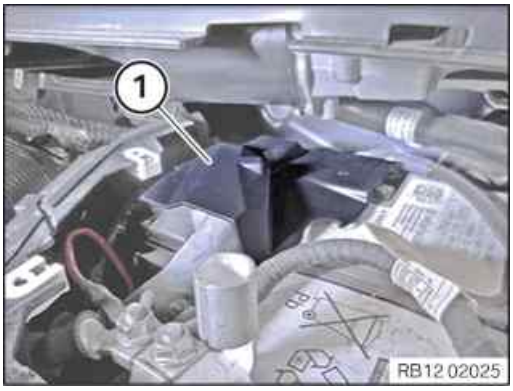

Install and engage cover (1) over the DDE connector.

Required reworking:

- Install cover of bulkhead on top
- Carry out injection quantity compensation when replacing the DDE control unit

Injection quantity compensation:

If the DDE control unit has been replaced, the injectors must be adjusted!

Injection quantity compensation is carried out with the aid of so-called adjustment values.

The adjustment value is printed on each injector.

The adjustment values must be stored in the new control unit!

Injection quantity compensation:

The adjustment values in area (1) must be read off in each case when new injectors are installed.

The adjustment value (7-position letter/number code) is engraved on each injector.

The digits / letters correspond to the installation location (cylinder) of the new injectors.

- Select "DDE".
- Select ”Adjustment, injection quantity compensation”
- Select ”Test plan”
- The adjustment must be entered for each cylinder on which an injector has been replaced

  It is necessary to adjust the new injectors to ensure their full operability

13 62 560 Remove and install/replace hot film air mass meter

WARNING

Hot surfaces.

Risk of burning!

- Perform all work only on components that have cooled down.

RISK OF DAMAGE

Contaminant or foreign body.

Contamination can result in malfunctions, operating failure or leaks.

- Adhere to the utmost cleanliness.
- Protect components from contamination e.g. by covering.
- Close off line connections with seal plugs.

1 – Removing hot film air mass meter

RISK OF DAMAGE

Electrostatic discharge.

Damage to or destruction of electrical components.

- Leave electrical components in original packaging until just before they are installed. Use the original packaging only for any return shipments. Always package removed components straight away.
- Read and comply with user information on using the associated special tool 12 7 060.
- Only touch the housings of electrical components. Do not touch pins or multi-pin connectors directly.
- Wear electrically conductive clothing and antistatic shoes (with ESD symbol).
- For additional information see: 61 35 Information on electrostatic discharge (ESD) protection.

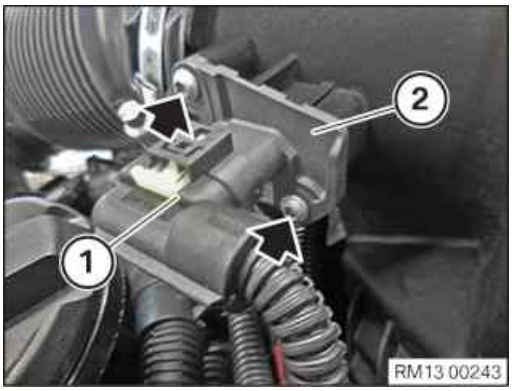

- Unlock and disconnect connector (1).
- Remove screws (arrows).
- Remove the hot film air mass meter (2).

2 – Installing hot film air mass meter

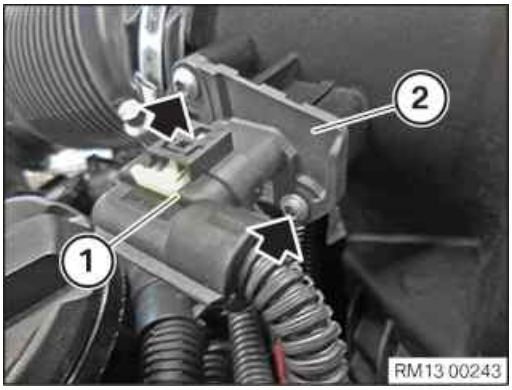

- Insert and install the hot film air mass meter (2).
- Tighten screws (arrows).

Hot film air-mass meter to intake filter housing

Screw TS4x16		Tightening torque	1,4 Nm

- Connect connectors (1) and lock.

  The connector (1) must engage audibly.

3 – Replacement: Reset adaptation values

- Reset the adaptation values with the diagnosis system:
  - Power train
  - DDE / DME
  - Reset adaptations
  - Delete adaptations

Additional Information

Overview of Tightening Torques

Hot film air-mass meter to intake filter housing

Used in step 2

Screw TS4x16		Tightening torque	1,4 Nm

Links

Repair instructions	Used in step
61 35 ... Notes on ESD protection (Electro Static Discharge)	1

13 62 538 Removing and installing/replacing charge-air temperature sensor (B37, B47)

Necessary preliminary tasks:

- Remove intake silencer housing.

Removal:

Unlock connector (1) from charge-air temperature sensor () and pull off.

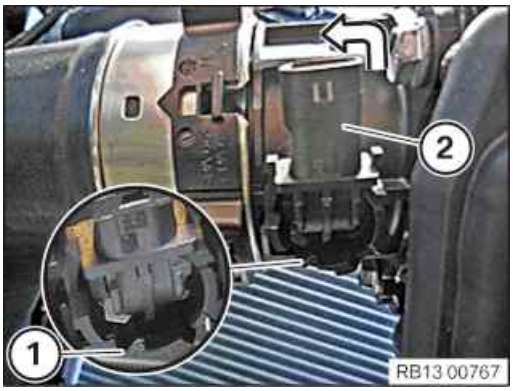

Attention!

The lock (1) must be unlocked for removal of the charge-air temperature sensor (2)!

If the lock (1) is not unlocked, the retaining lug on the charge-air temperature sensor (2) will wear out.

If the retaining lug is damaged, the charge-air temperature sensor (2) may fall out of the pressure pipe.

Release lock (1) with a suitable tool.

Rotate charge-air temperature sensor (2) anticlockwise by 90° and pull out sensor straight.

Installation:

Insert charge-air temperature sensor (2) into charge air pipe (1) and turn clockwise by 90° until lock (1) is engaged.

Attach connector (1) to charge-air temperature sensor.

Connector (1) must engage audibly.

Required follow-up work:

- Install intake silencer housing.

13 62 667 Removing and installing/replacing exhaust gas pressure sensor upstream of exhaust turbocharger

Warning!

Risk of burning!

Only perform this repair work on an engine that has cooled down.

Necessary preliminary tasks:

- Remove clean air pipe.

Removal:

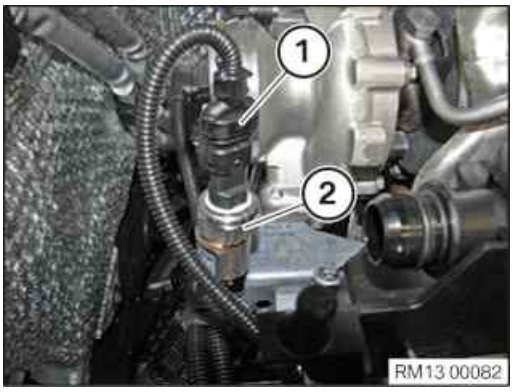

Unlock connector (1) and pull off.

Release and remove exhaust gas pressure sensor (2).

Installation:

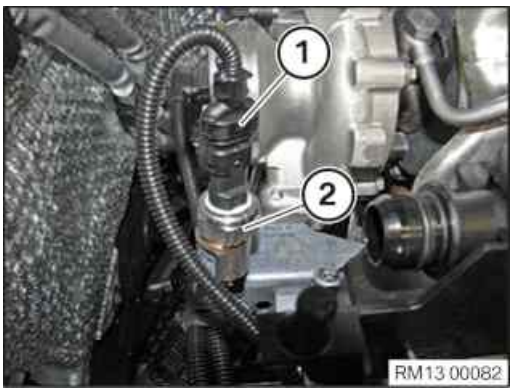

Install and tighten exhaust gas pressure sensor (2).

Tightening torque 13 62 9AZ.

Attach connector (1) to exhaust gas pressure sensor.

Connector (1) must engage audibly.

Required follow-up work:

- Install clean air pipe.

Note:
After replacing the exhaust gas pressure sensor, carry out an adaptation using the „Exhaust gas pressure sensor upstream of exhaust turbocharger“ diagnosis system.

Check stored error/fault messages.

Delete the fault memory.

13 62 560 Removing and installing/replacing hot film air mass meter (B37, B38, B46, B47, B48)

Removal:

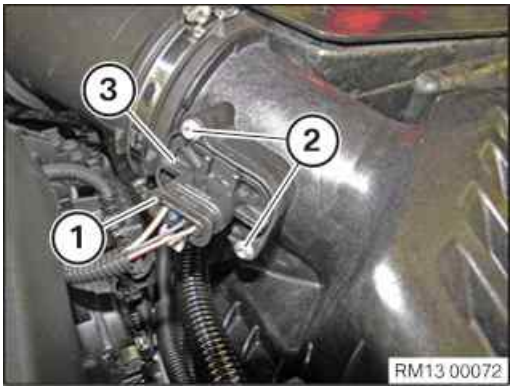

Unlock connector (1) and pull off.

Unfasten screws (2).

Remove the hot film air mass meter (3).

Installation:

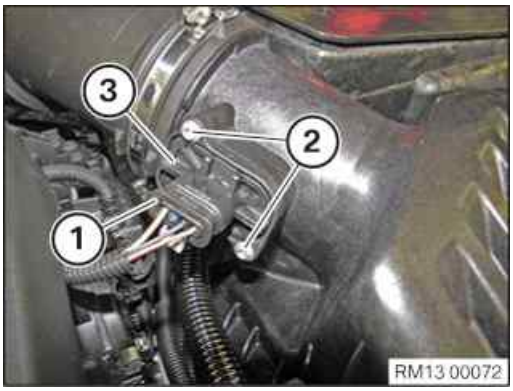

Install hot film air mass meter (3).

Tighten down screws (2).

Tightening torque 13 62 6AZ.

Attach connector (1).

Connector (1) must engage audibly.

Replacement only:

Reset the adaptation values for the air mass system with the MINI diagnosis system.

13 62 664 Removing and installing/replacing monitoring sensor (B37, B47)

Special tools required:

- 11 7 030

Warning!

Risk of burning!

Only perform this repair work on an engine that has cooled down.

Necessary preliminary tasks:

- Read out the fault memory of the DDE control unit.
- Switch off ignition.
- Remove front underbody protection.

Removal:

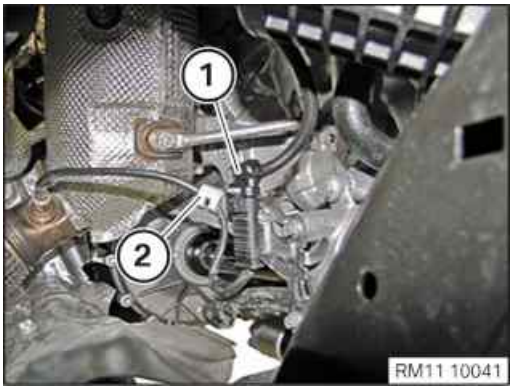

Unlock connector (1) and pull off.

Detach cable from retainer (2).

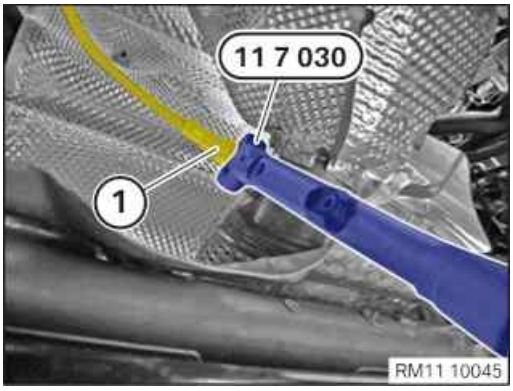

Release monitoring sensor with special tool 11 7 030 and remove.

Preparation for installation: Installation note:

Threads of new oxygen sensors are already coated with NEVER-SEEZ compound.

If an oxygen sensor is reused, only apply a thin and uniform coat of NEVER-SEEZ compound (refer to BMW Group Parts) to thread.

Oxygen sensor section projecting into exhaust branch must not be cleaned or come into contact with lubricant.

Pay attention to cable routing of oxygen sensors.

Use special tool 11 7 030 to tighten down oxygen sensor (1).

Tightening torque 13 62 3AZ.

Cover oxygen sensors when applying underbody protection.

Installation:

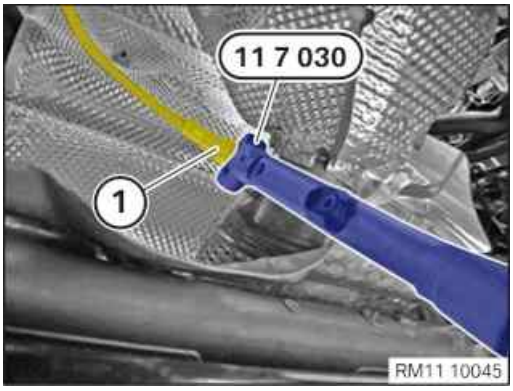

Install monitoring sensor and tighten with special tool 11 7 030 .

Tightening torque 13 62 3AZ.

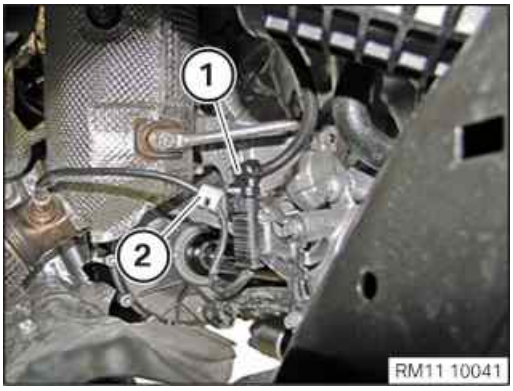

Attach connector (1).

Connector (1) must engage audibly.

Secure cable with clamp (2).

Required follow-up work:

- Install front underbody protection.

13 62 534 Removing and installing/replacing temperature sensor for diesel particulate filter (B37, B47)

Warning!

Risk of burning!

Only perform this repair work on an engine that has cooled down.

Necessary preliminary tasks:

- Remove clean air pipe.

Removal:

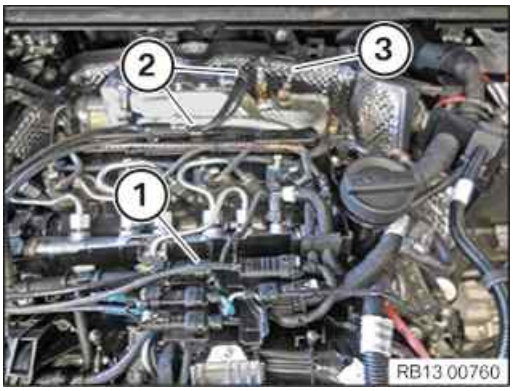

Unlock connector (1) and pull off.

Detach cable from retainer (2).

Release exhaust-gas temperature sensor (3) and remove.

Installation:

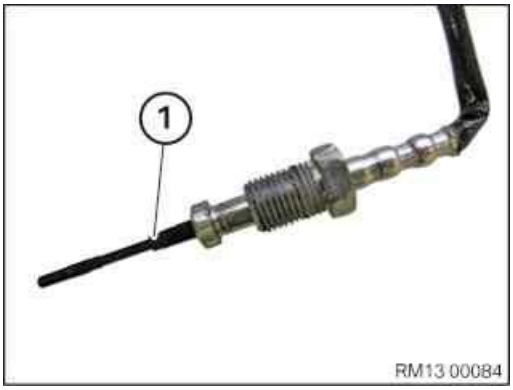

Attention!

When installing the exhaust-gas temperature sensor make sure that the gauge tip (1) is not damaged.

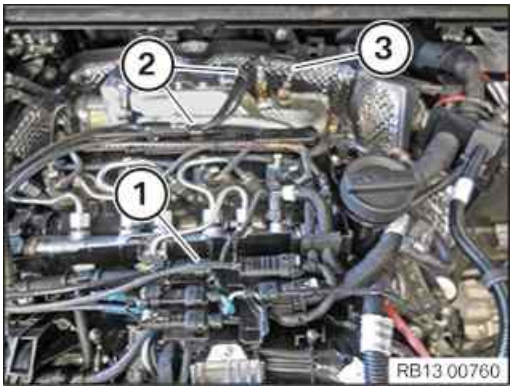

Install and tighten exhaust-gas temperature sensor (3).

Tightening torque 13 62 4AZ.

Secure cable with clamp (2).

Attach connector (1).

Connector (1) must engage audibly.

Required follow-up work:

- Install clean air pipe.

13 62 663 Removing and installing/replacing temperature sensor for exhaust system downstream from catalytic converter at diesel particulate filter (B37, B47)

Warning!

Risk of burning!

Only perform this repair work on an engine that has cooled down.

Necessary preliminary tasks:

- Remove clean air pipe.
- Remove front underbody protection.

Removal:

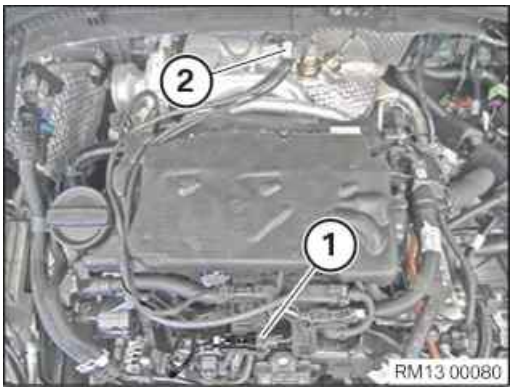

Unlock connector (1) and pull off.

Release cable from clamp (2).

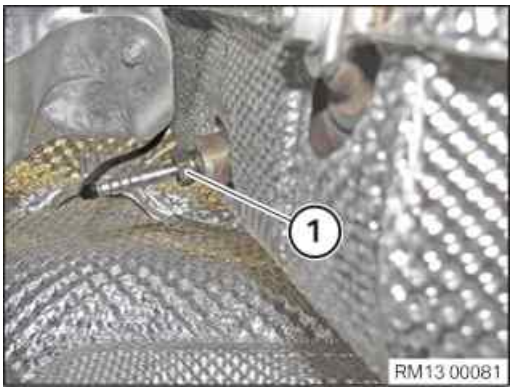

Release and remove temperature sensor (1) on bottom of diesel particulate filter.

Installation:

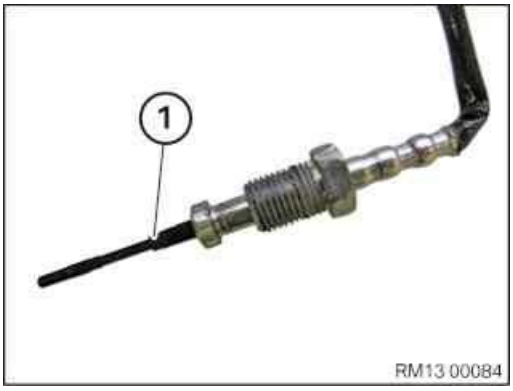

Attention!

When installing the exhaust-gas temperature sensor make sure that the gauge tip (1) is not damaged.

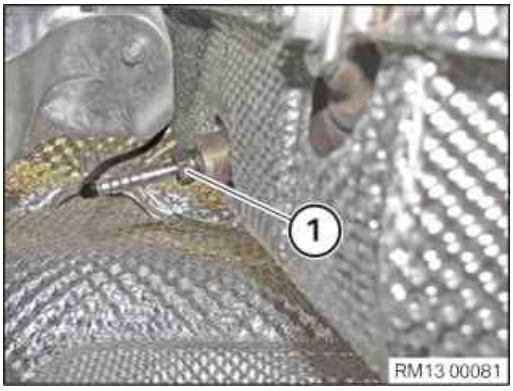

Install and tighten temperature sensor (1) on bottom of diesel particulate filter.

Tightening torque 13 62 4AZ.

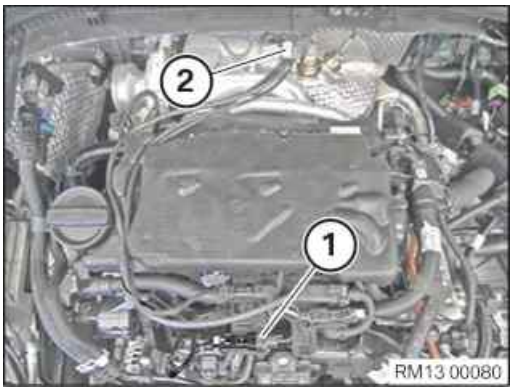

Secure cable with clamp (2).

Attach connector (1).

Connector (1) must engage audibly.

Required follow-up work:

- Install clean air pipe.
- Install front underbody protection.

13 62 651 Removing/replacing oxygen sensor (B37, B47)

Special tools required:

- 11 7 020
- 11 7 030

Warning!

Risk of burning!

Only perform this repair work on an engine that has cooled down.

Necessary preliminary tasks:

- Remove clean air pipe.

Removal:

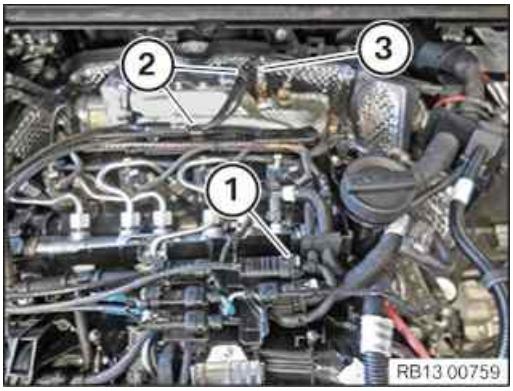

Unlock and disconnect plugs (1).

Detach cable from retainer (2).

Release oxygen sensor (3) and remove.

Preparation for installation: Installation note:

Threads of new oxygen sensors are already coated with NEVER-SEEZ compound.

If an oxygen sensor is reused, only apply a thin and uniform coat of NEVER-SEEZ compound (refer to BMW Group Parts) to thread.

Oxygen sensor section projecting into exhaust branch must not be cleaned or come into contact with lubricant.

Pay attention to cable routing of oxygen sensors.

Use special tool 11 7 030 to tighten down oxygen sensor (3).

Tightening torque 13 62 3AZ.

Cover oxygen sensors when applying underbody protection.

Installation:

Install oxygen sensor (1) and tighten with special tool 11 7 030 .
Tightening torque 13 62 3AZ.

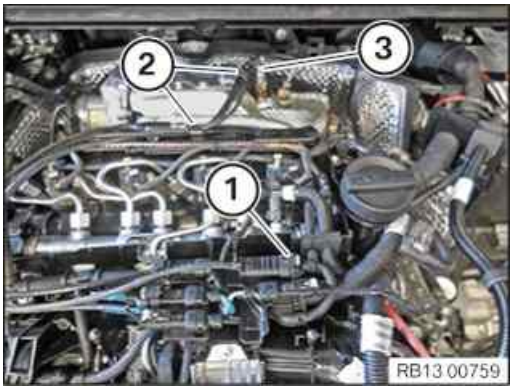

Secure cable of oxygen sensor (3) in clamp (2).
Attach and lock connector (1).
Connector (1) must engage audibly.

Required follow-up work:

- Install clean air pipe.

13 62 676 Rep. diff. press. sensor of low-pressure exhaust-gas recirculation exhaust gas

PRELIMINARY WORK

1 – Removing the acoustic cover

WARNING

Hot surfaces.

Risk of burning!

- Perform all work only on components that have cooled down.

RISK OF DAMAGE

Damage to the acoustic cover.

Jerky movements during disassembly and excessive application of force during installation may result in breakage of the acoustic cover.

- Disassemble or mount the acoustic cover carefully.
- Disassemble or mount snap-lock couplings of the ball pivots one after the other.
- Disassemble or mount acoustic cover only at temperatures >20 °C.
- Use only distilled water as an auxiliary material during installation, no lubricants.

- Unclip the acoustic cover from the marked areas towards the top.

2 – Remove the differential pressure sensor for the low pressure exhaust-gas recirculation

RISK OF DAMAGE

Electrostatic discharge.

Damage to or destruction of electrical components.

- Leave electrical components in original packaging until just before they are installed. Use the original packaging only for any return shipments. Always package removed components straight away.
- Read and comply with user information on using the associated special tool 12 7 060.
- Only touch the housings of electrical components. Do not touch pins or multi-pin connectors directly.
- Wear electrically conductive clothing and antistatic shoes (with ESD symbol).
- For additional information see: 61 35 Information on electrostatic discharge (ESD) protection.

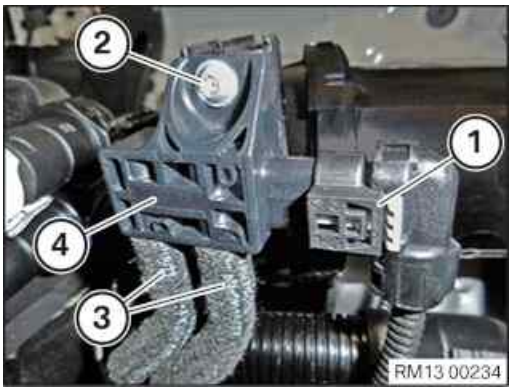

- Unlock and disconnect the plug connection (1).
- Loosen screw (2).
- Pull off pressure hose (3).
- Feed out and remove the differential pressure sensor (4).

3 – Install the differential pressure sensor for the low-pressure exhaust-gas recirculation

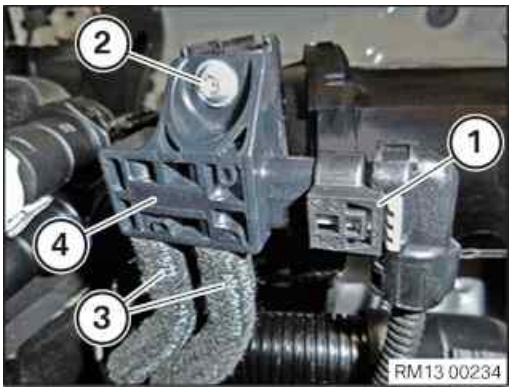

- Feed in and install the differential pressure sensor (4).
- Check pressure hoses (3) and renew hardened pressure hoses (3) if necessary.

  Parts: Pressure hoses
- Connect the pressure hoses (3) and secure in place with screw clamps.

Clamp for the pressure hose on the differential pressure sensor

Clamp 15–19mm		Tightening torque	3 Nm

- Tighten down screw (2).

Differential pressure sensor to holder

Screw		Tightening torque	4 Nm

- Connect and lock the connector (1).

  The connector (1) must engage audibly.

4 – Install acoustic cover

RISK OF DAMAGE

Damage to the acoustic cover.

Jerky movements during disassembly and excessive application of force during installation may result in breakage of the acoustic cover.

- Disassemble or mount the acoustic cover carefully.
- Disassemble or mount snap-lock couplings of the ball pivots one after the other.
- Disassemble or mount acoustic cover only at temperatures >20 °C.
- Use only distilled water as an auxiliary material during installation, no lubricants.

- Check for correct installation of all rubber mounts in the acoustic cover (1).

- Clip in the acoustic cover into the holders in the indicated areas.
- Make sure that the acoustic cover engages audibly.

Additional Information

Overview of Tightening Torques

Clamp for the pressure hose on the differential pressure sensor Used in step 3

Clamp 15–19mm		Tightening torque	3 Nm

Differential pressure sensor to holder Used in step 3

Screw		Tightening torque	4 Nm

Links

Repair instructions	Used in step
61 35 ... Notes on ESD protection (Electro Static Discharge)	2

13 62 538 Replace charge air temperature sensor

WARNING

Hot surfaces.

Risk of burning!

- Perform all work only on components that have cooled down.

PRELIMINARY WORK

1 – Remove the intake neck for intake silencer housing

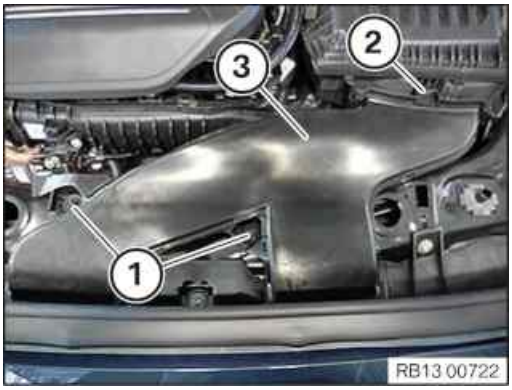

- Loosen nuts (1).
- Loosen the lock (2).
- Guide the intake neck (3) out and remove it.

2 – Removing intake silencer housing

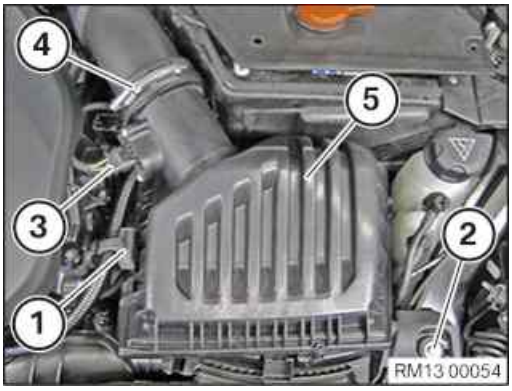

- Loosen the holder (1).
- Loosen screw (2).
- Unlock and loosen connector (3).
- Unfasten clamp (4).
- Pull out and remove the intake silencer housing (5) from the rubber mounts towards the top.

MAIN WORK

3 – Remove charge air temperature sensor

WARNING

Hot surfaces.

Risk of burning!

- Perform all work only on components that have cooled down.

RISK OF DAMAGE

Electrostatic discharge.

Damage to or destruction of electrical components.

- Leave electrical components in original packaging until just before they are installed. Use the original packaging only for any return shipments. Always package removed components straight away.
- Read and comply with user information on using the associated special tool 12 7 060.
- Only touch the housings of electrical components. Do not touch pins or multi-pin connectors directly.
- Wear electrically conductive clothing and antistatic shoes (with ESD symbol).
- For additional information see: 61 35 Information on electrostatic discharge (ESD) protection.

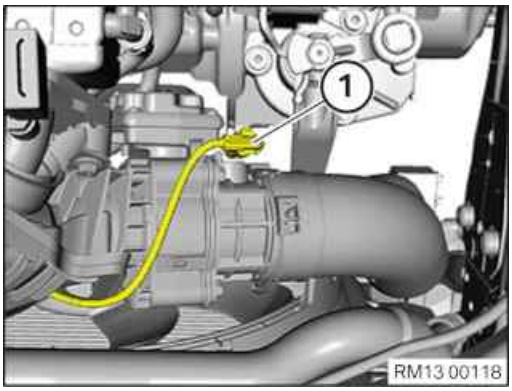

- Unlock and disconnect connector (1).

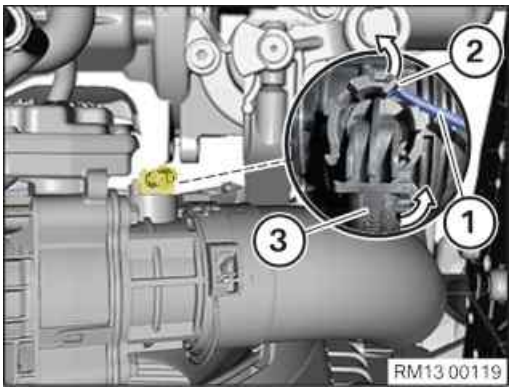

- Unlock the lock (2) in direction of arrow with suitable tool (1).
- Turn the charge-air temperature sensor (3) anti-clockwise (arrow) by 90°.
- Take out and remove charge air temperature sensor (3).

4 – Install charge air temperature sensor

RISK OF DAMAGE

Contaminant or foreign body.

Contamination can result in malfunctions, operating failure or leaks.

- Adhere to the utmost cleanliness.
- Protect components from contamination e.g. by covering.
- Close off line connections with seal plugs.

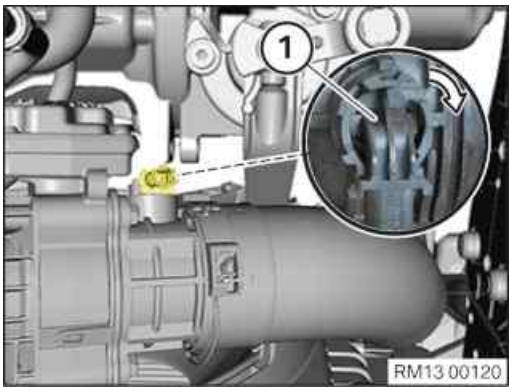

- (1)Insert and install the charge air temperature sensor.
- Turn the charge-air temperature sensor (1) clockwise (arrow) by 90° and lock.

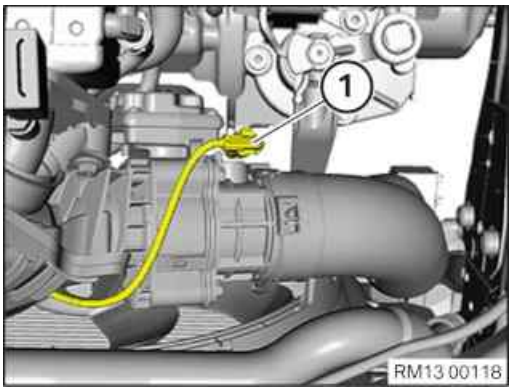

- Connect connectors (1) and lock.

  The connector (1) must engage audibly.

POSTPROCESSES

5 – Installing intake silencer housing

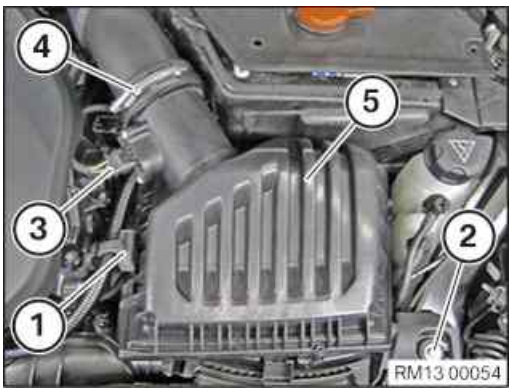

- Insert the intake silencer housing (5) into the rubber mounts and install it.

  Intake filter housing (5) must engage audibly.
- Tighten down screw (2).

Intake silencer housing to lock bridge

M6X30		Tightening torque	8 Nm

- Tighten clamp (4).

Clean air pipe to intake silencer housing

Clamp		Tightening torque	3 Nm

- Connect and lock the connector (3).

  The connector (3) must engage audibly.
- Insert and install the holder (1).

6 – Install the intake neck for the intake filter housing

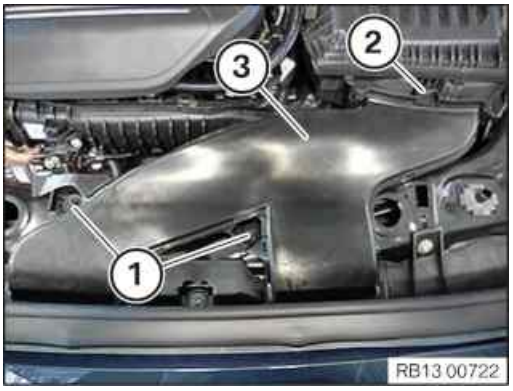

- Insert and install the intake neck (3).

  The lock (2) must audibly engage.
- Tighten nuts (1).

Intake neck to cross connection

M6		Tightening torque	8 Nm

Additional Information

Overview of Tightening Torques

Intake silencer housing to lock bridge

Used in step 5

M6X30		Tightening torque	8 Nm

Clean air pipe to intake silencer housing

Used in step 5

Clamp		Tightening torque	3 Nm

Intake neck to cross connection

Used in step 6

M6		Tightening torque	8 Nm

Links

Repair instructions	Used in step
61 35 ... Notes on ESD protection (Electro Static Discharge)	3

13 62 535 Replace charging pressure sensor

PRELIMINARY WORK

1 – Removing the acoustic cover

WARNING

Hot surfaces.

Risk of burning!

- Perform all work only on components that have cooled down.

RISK OF DAMAGE

Damage to the acoustic cover.

Jerky movements during disassembly and excessive application of force during installation may result in breakage of the acoustic cover.

- Disassemble or mount the acoustic cover carefully.
- Disassemble or mount snap-lock couplings of the ball pivots one after the other.
- Disassemble or mount acoustic cover only at temperatures >20 °C.
- Use only distilled water as an auxiliary material during installation, no lubricants.

- Unclip the acoustic cover from the marked areas towards the top.

MAIN WORK

2 – Remove the charging pressure sensor

WARNING

Hot surfaces.

Risk of burning!

- Perform all work only on components that have cooled down.

RISK OF DAMAGE

Electrostatic discharge.

Damage to or destruction of electrical components.

- Leave electrical components in original packaging until just before they are installed. Use the original packaging only for any return shipments. Always package removed components straight away.
- Read and comply with user information on using the associated special tool 12 7 060.
- Only touch the housings of electrical components. Do not touch pins or multi-pin connectors directly.
- Wear electrically conductive clothing and antistatic shoes (with ESD symbol).
- For additional information see: 61 35 Information on electrostatic discharge (ESD) protection.

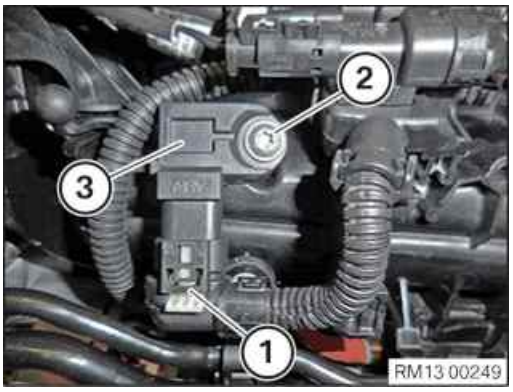

- Unlock and disconnect the plug connection (1).
- Loosen screw (2).
- Remove the charging pressure sensor (3).

3 – Install the charging pressure sensor

- Check sealing ring (1) for damage, renew if necessary.

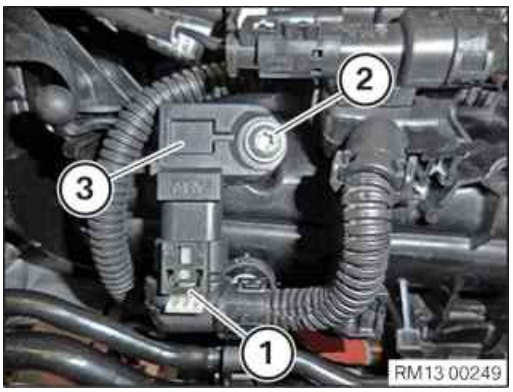

- Insert and install the charging pressure sensor (3).
- Tighten down screw (2).

Charging pressure sensor to intake plenum

6x20		Tightening torque	5 Nm

- Connect and lock the connector (1).

  The connector (1) must engage audibly.

4 – Install acoustic cover

RISK OF DAMAGE

Damage to the acoustic cover.

Jerky movements during disassembly and excessive application of force during installation may result in breakage of the acoustic cover.

- Disassemble or mount the acoustic cover carefully.
- Disassemble or mount snap-lock couplings of the ball pivots one after the other.
- Disassemble or mount acoustic cover only at temperatures >20 °C.
- Use only distilled water as an auxiliary material during installation, no lubricants.

- Check for correct installation of all rubber mounts in the acoustic cover (1).

- Clip in the acoustic cover into the holders in the indicated areas.
- Make sure that the acoustic cover engages audibly.

Additional Information

Overview of Tightening Torques

Charging pressure sensor to intake plenum			Used in step 3
6x20		Tightening torque	5 Nm

Links

Repair instructions	Used in step
61 35 ... Notes on ESD protection (Electro Static Discharge)	2

13 62 531 Replace coolant temperature sensor

PRELIMINARY WORK

1 – Removing the acoustic cover

WARNING

Hot surfaces.

Risk of burning!

- Perform all work only on components that have cooled down.

RISK OF DAMAGE

Damage to the acoustic cover.

Jerky movements during disassembly and excessive application of force during installation may result in breakage of the acoustic cover.

- Disassemble or mount the acoustic cover carefully.
- Disassemble or mount snap-lock couplings of the ball pivots one after the other.
- Disassemble or mount acoustic cover only at temperatures >20 °C.
- Use only distilled water as an auxiliary material during installation, no lubricants.

- Unclip the acoustic cover from the marked areas towards the top.

MAIN WORK

2 – Remove coolant temperature sensor

WARNING

Hot surfaces.

Risk of burning!

- Perform all work only on components that have cooled down.

WARNING

Hot fluids.

Risk of scalding!

- Conduct all work in the vehicle wearing appropriate personal protective equipment only.

RISK OF DAMAGE

Electrostatic discharge.

Damage to or destruction of electrical components.

- Leave electrical components in original packaging until just before they are installed. Use the original packaging only for any return shipments. Always package removed components straight away.
- Read and comply with user information on using the associated special tool 12 7 060.
- Only touch the housings of electrical components. Do not touch pins or multi-pin connectors directly.
- Wear electrically conductive clothing and antistatic shoes (with ESD symbol).
- For additional information see: 61 35 Information on electrostatic discharge (ESD) protection.

TECHNICAL INFORMATION

Collect and dispose of emerging fluids. Observe country-specific waste disposal regulations.

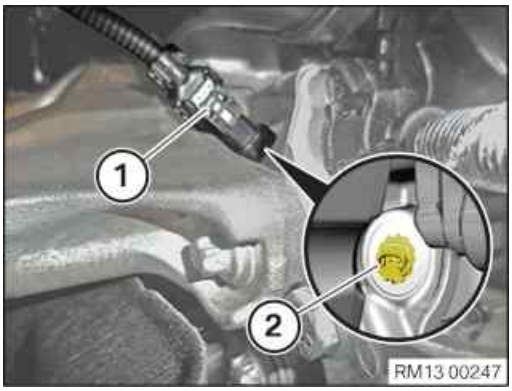

- Unlock and disconnect the plug connection (1).
- Undo coolant temperature sensor (2) using special tool **0 496 142 (11 8 850)**.

3 – Install coolant temperature sensor

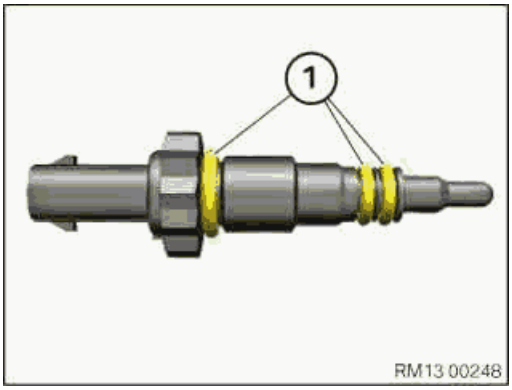

- When reusing coolant temperature sensor sealing rings (1), check for damage, renew if necessary.

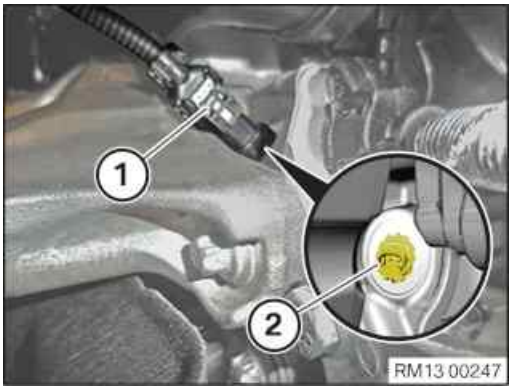

- Insert and install the coolant temperature sensor (2).
- Tighten coolant temperature sensor (2) using special tool **0 496 142 (11 8 850)**.

Coolant temperature sensor at cylinder head

Temperature sensor		Tightening torque	3,5 Nm

- Connect and lock the connector (1).

  The connector (1) must engage audibly.

POSTPROCESSES

4 – Install acoustic cover

RISK OF DAMAGE

Damage to the acoustic cover.

Jerky movements during disassembly and excessive application of force during installation may result in breakage of the acoustic cover.

- Disassemble or mount the acoustic cover carefully.
- Disassemble or mount snap-lock couplings of the ball pivots one after the other.
- Disassemble or mount acoustic cover only at temperatures >20 °C.
- Use only distilled water as an auxiliary material during installation, no lubricants.

- Check for correct installation of all rubber mounts in the acoustic cover (1).

- Clip in the acoustic cover into the holders in the indicated areas.
- Make sure that the acoustic cover engages audibly.

5 – Checking coolant level and topping up if needed

CAUTION

Materials harmful to health.

Contact with fluids harmful to health!

- Note and follow safety information on containers.
- Conduct all work in appropriate personal protective equipment only.

TECHNICAL INFORMATION

Follow notes for repair work on the cooling system.
For additional information see:
Main group 17
17 00 ... Notes for working on the cooling system

TECHNICAL INFORMATION

Life-long fill of coolant!

Do not reuse used coolant.

When replacing and removing components which rely on the corrosion protection effect of the coolant, it is essential to change the coolant. The cooling system must therefore be emptied and refilled.

In the case of other removal work involving the draining of part quantities of coolant, the coolant level must be topped up with new coolant.

TECHNICAL INFORMATION

Collect and dispose of emerging fluids. Observe country-specific waste disposal regulations.

- Check coolant level in coolant expansion tank (1) and adjust to the maximum if needed.

Additional Information

Overview of Tightening Torques

Coolant temperature sensor at cylinder head — Used in step 3

Temperature sensor		Tightening torque	3,5 Nm

Overview of Special Tools

0 496 142 (11 8 850) Socket WAF 46

Common — Used in step 2 3

Usage	(Long socket SW17 (double hexagon)) For removal and installation of temperature sensor (Stahlwille)
Included in the tool or work	
Storage location	C24
Replaced by	
In connection with	
SI-Number	01 05 07 (353)

Links

Repair instructions	Used in step
61 35 ... Notes on ESD protection (Electro Static Discharge)	2
17 00 ... Instructions for working on cooling system	5

Operating materials	Used in step
Main group 17	5

13 62 610 Replace crankshaft sensor

TECHNICAL INFORMATION

- When the engine is stopped after the end of the journey, it may be necessary to run the electric fan. In rare cases, operation of the electric fan can last up to 11 min. This protects the components. In this case, replacing the electric fan will not remedy the problem!

PRELIMINARY WORK

1 – Remove the intake neck for intake silencer housing

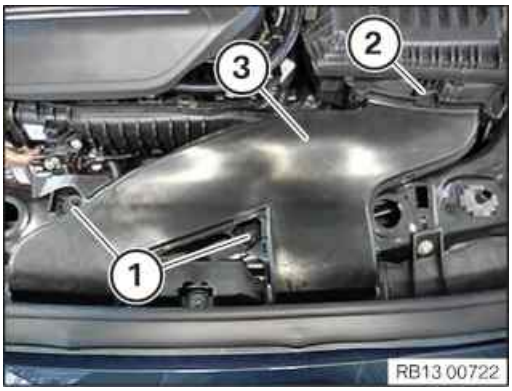

- Loosen nuts (1).
- Loosen the lock (2).
- Guide the intake neck (3) out and remove it.

2 – Removing intake silencer housing

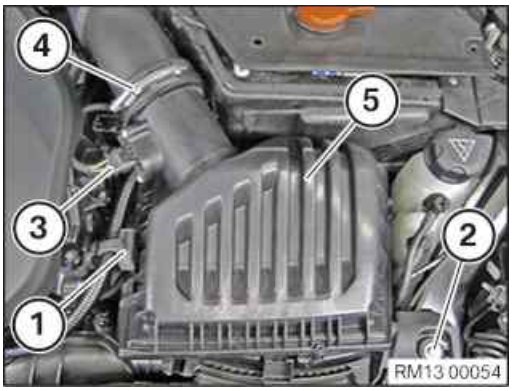

- Loosen the holder (1).
- Loosen screw (2).
- Unlock and loosen connector (3).
- Unfasten clamp (4).
- Pull out and remove the intake silencer housing (5) from the rubber mounts towards the top.

3 – Remove cross connection

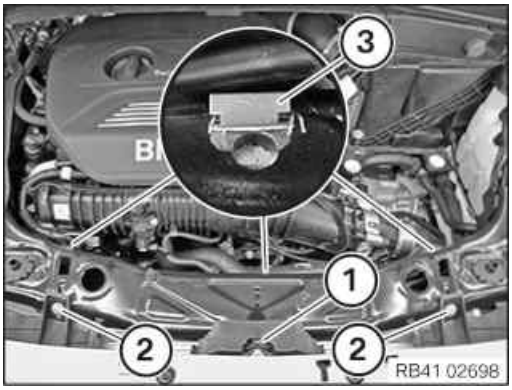

- Loosen screws (1) and (2).
- Detach clamps (3) for bonnet lock Bowden cable.

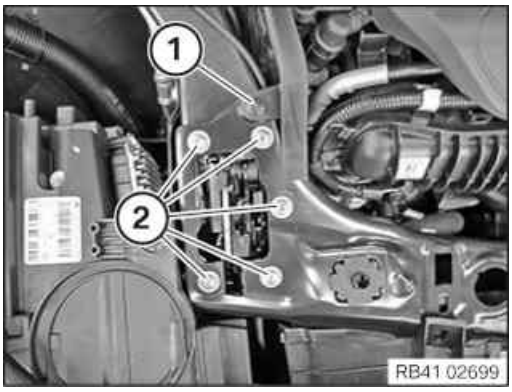

- Lever out expanding rivet (1).
- Loosen screws (2).

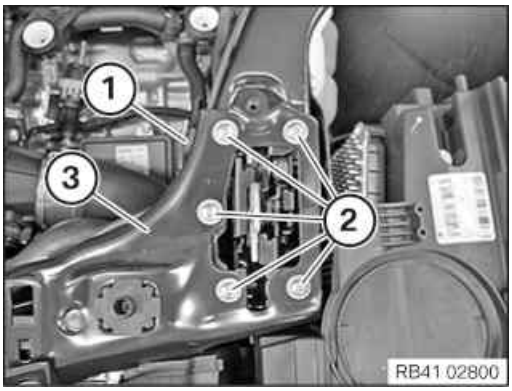

- Lever out expanding rivet (1).
- Loosen the screws (2) and remove the cross connection (3).

4 – Removing the fan cowl with electric fan

WARNING

Hot surfaces.

Risk of burning!

- Perform all work only on components that have cooled down.

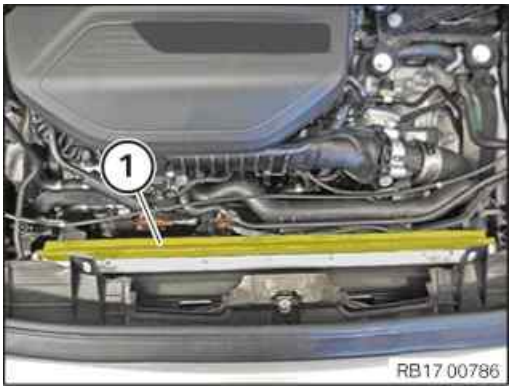

- Feed out and remove the sealing (1) from the radiator.

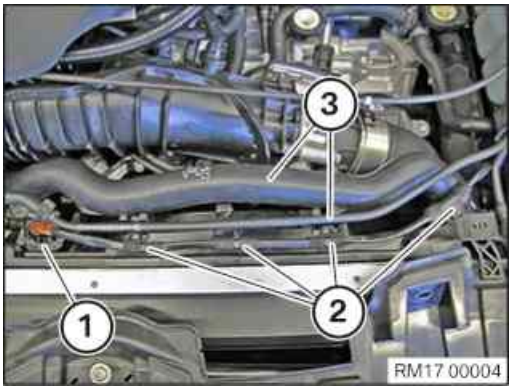

- Unlock plug connection (1) and disconnect.
- Unlock and loosen the clamps (2).
- Feed out connector (1) and place to one side.
- Thread off coolant line (3) and place to the side.

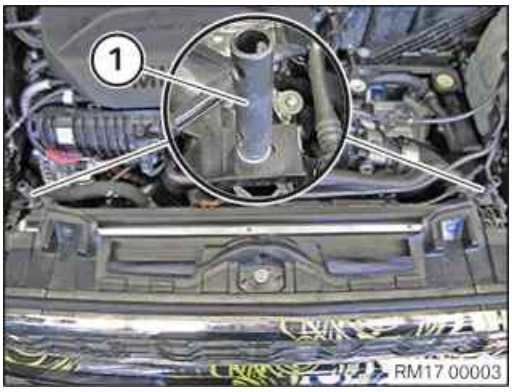

- Loosen screws (1).

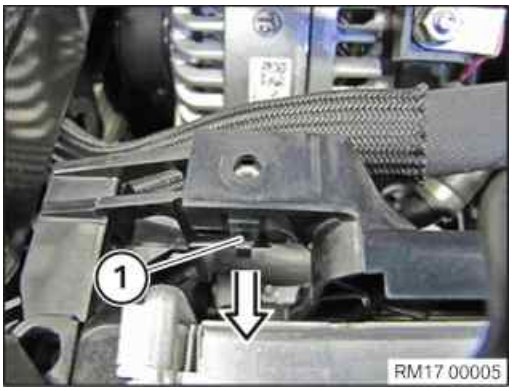

- Unlock the right lock (1) on the fan cowl in the direction of the arrow.

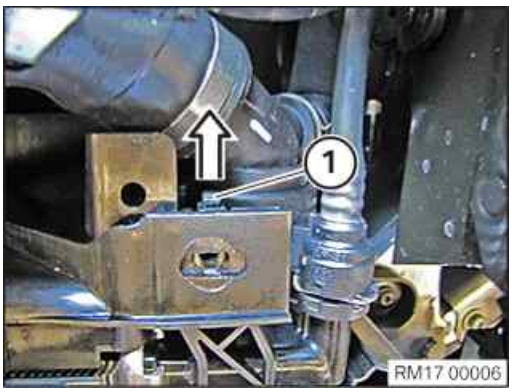

- Unlock the left lock (1) on the fan cowl in the direction of the arrow.

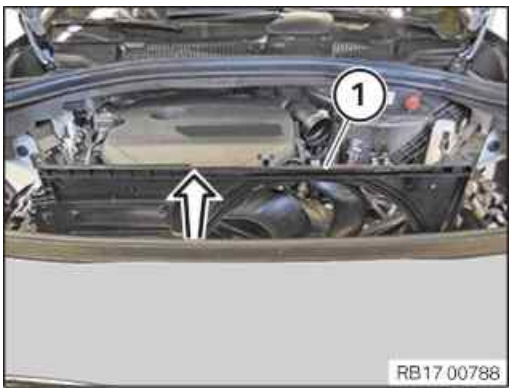

- Guide out fan cowl (1) in direction of arrow and remove.

MAIN WORK

5 – Removing the crankshaft sensor

RISK OF DAMAGE

Electrostatic discharge.

Damage to or destruction of electrical components.

- Leave electrical components in original packaging until just before they are installed. Use the original packaging only for any return shipments. Always package removed components straight away.
- Read and comply with user information on using the associated special tool 12 7 060.
- Only touch the housings of electrical components. Do not touch pins or multi-pin connectors directly.
- Wear electrically conductive clothing and antistatic shoes (with ESD symbol).
- For additional information see: 61 35 Information on electrostatic discharge (ESD) protection.

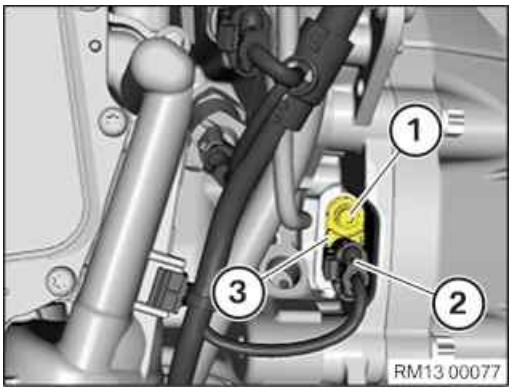

- Loosen screw (1).
- Unlock and disconnect connector (2).
- Guide out and remove crankshaft sensor (3).

6 – Installing the crankshaft sensor

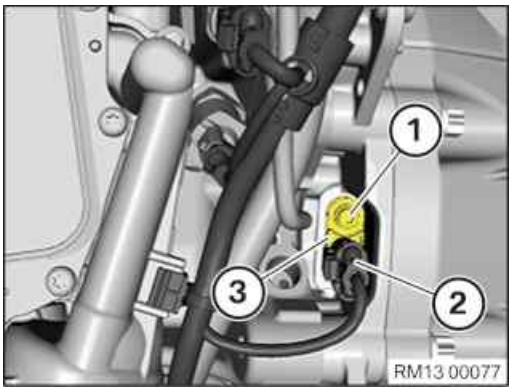

- Feed in and install the crankshaft sensor (3).
- Connect connectors (2) and lock.
- Tighten down screw (1).

Crankshaft sensor to housing cover

Crankshaft sensor		Tightening torque	4,6 Nm

POSTPROCESSES

7 – Installing fan cowl with electric fan

TECHNICAL INFORMATION

Make sure that the connections are locked correctly. The locks must engage audibly.

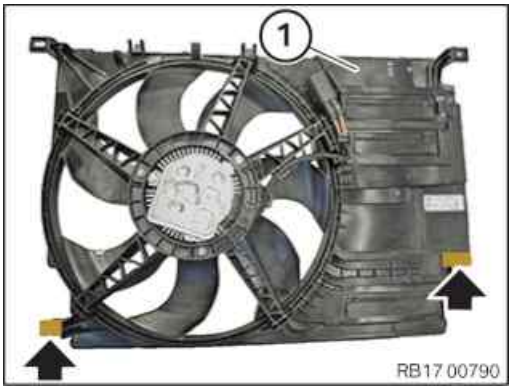

- Feed the guides (arrows) of the fan cowl (1) into the charge air cooler.

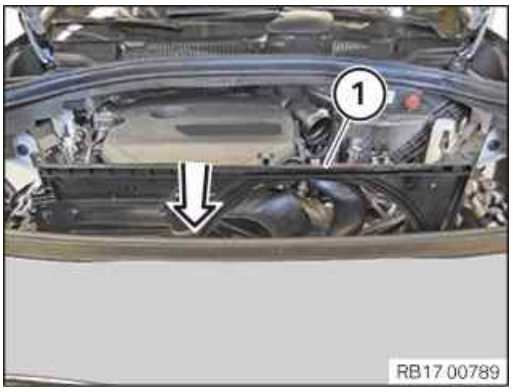

- Feed in and install the fan cowl (1) in the direction of the arrow.

- Lock the left and right locks (arrows).

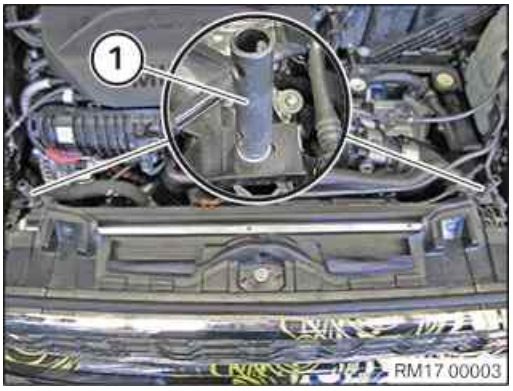

- Tighten the screws (1).

Fan cowl on radiator

M6X12		Tightening torque	6 Nm

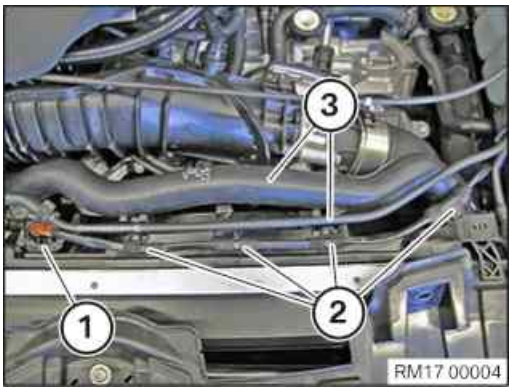

- Connect connectors (1) and lock.

  The connector (1) must engage audibly.
- Secure clamps (2).
- Thread in and install coolant line (3).

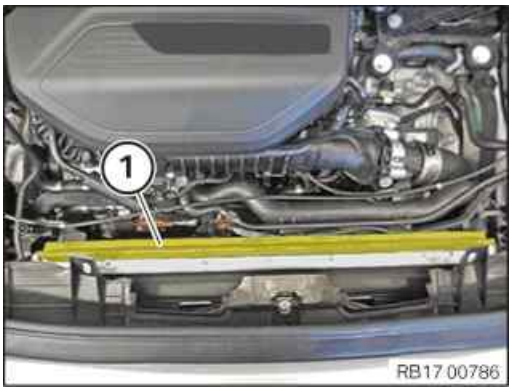

- Guide the sealing (1) on the radiator in and install it.

8 – Install cross connection

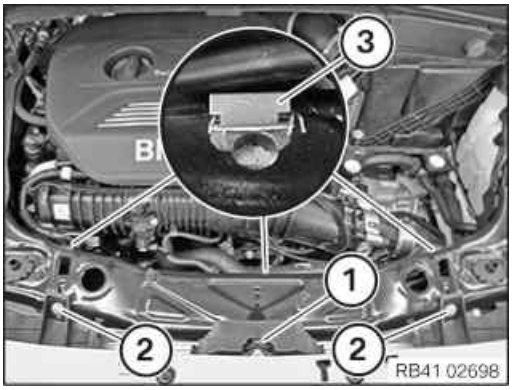

- Install cross connection.
- Position all screws.
- Tighten down screw (1).

Bracing strut to top cross connection

M8		Tightening torque	25 Nm

- Tighten down screws (2).

Air duct to deformation element/cross connection

M6x20 screw		Tightening torque	6 Nm

- Fasten clamps (3) for bonnet lock Bowden cable to cross connection.

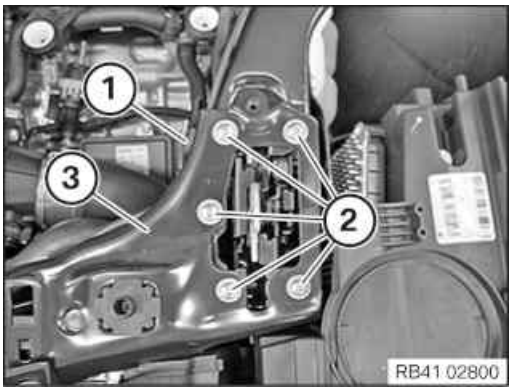

- Tighten screws (2) of cross connection (3).

Cross connection on support for cross connection

M6x20		Tightening torque	12 Nm

- Fasten expanding rivet (1).

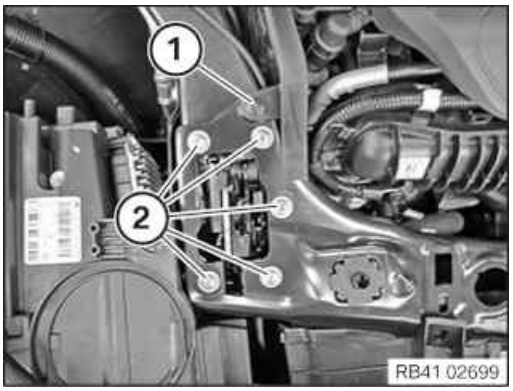

- Tighten down screws (2).

Cross connection on support for cross connection

M6x20		Tightening torque	12 Nm

- Fasten expanding rivet (1).

9 – Installing intake silencer housing

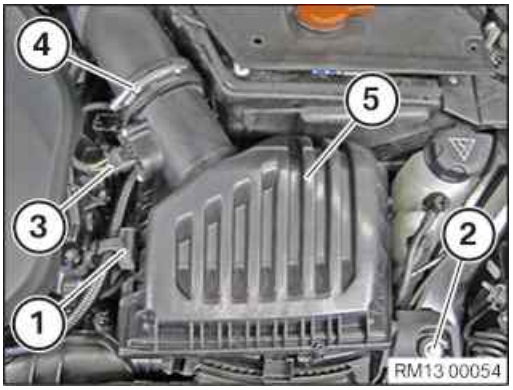

- Insert the intake silencer housing (5) into the rubber mounts and install it.
  Intake filter housing (5) must engage audibly.
- Tighten down screw (2).

Intake silencer housing to lock bridge

M6X30		Tightening torque	8 Nm

- Tighten clamp (4).

Clean air pipe to intake silencer housing

Clamp		Tightening torque	3 Nm

- Connect and lock the connector (3).
  The connector (3) must engage audibly.
- Insert and install the holder (1).

10 – Install the intake neck for the intake filter housing

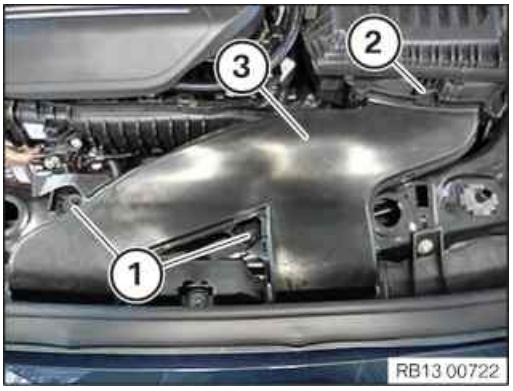

- Insert and install the intake neck (3).
  The lock (2) must audibly engage.
- Tighten nuts (1).

Intake neck to cross connection

M6		Tightening torque	8 Nm

Additional Information

Overview of Tightening Torques

Crankshaft sensor to housing cover — Used in step 6

Crankshaft sensor		Tightening torque	4,6 Nm

Fan cowl on radiator — Used in step 7

M6X12		Tightening torque	6 Nm

Bracing strut to top cross connection — Used in step 8

M8		Tightening torque	25 Nm

Air duct to deformation element/cross connection — Used in step 8

M6x20 screw		Tightening torque	6 Nm

Cross connection on support for cross connection — Used in step 8

M6x20		Tightening torque	12 Nm

Intake silencer housing to lock bridge — Used in step 9

M6X30		Tightening torque	8 Nm

Clean air pipe to intake silencer housing — Used in step 9

Clamp		Tightening torque	3 Nm

Intake neck to cross connection			Used in step 10
M6		Tightening torque	8 Nm

Links

Repair instructions	Used in step
61 35 ... Notes on ESD protection (Electro Static Discharge)	5

13 62 668 Replace diesel particulate sensor

PRELIMINARY WORK

1 – If installed: Removing rear underbody protection

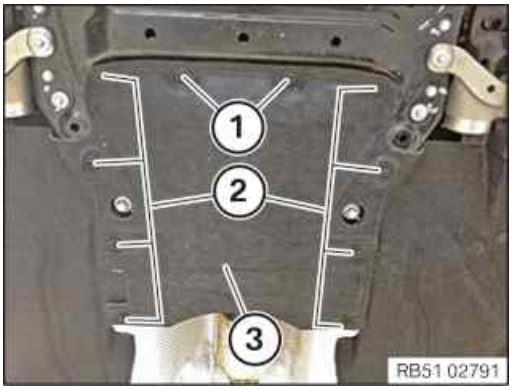

- Loosen screws (1) and (2).
- Remove underbody protection (3).

2 – Removing right underbody panelling

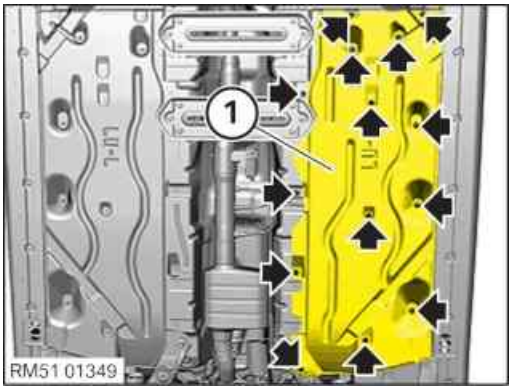

- Unscrew all bolts and nuts (arrows).
- Remove the underbody panelling (1).

MAIN WORK

3 – Remove the diesel particulate sensor

WARNING

Hot surfaces.

Risk of burning!

- Perform all work only on components that have cooled down.

RISK OF DAMAGE

Electrostatic discharge.

Damage to or destruction of electrical components.

- Leave electrical components in original packaging until just before they are installed. Use the original packaging only for any return shipments. Always package removed components straight away.
- Read and comply with user information on using the associated special tool 12 7 060.
- Only touch the housings of electrical components. Do not touch pins or multi-pin connectors directly.
- Wear electrically conductive clothing and antistatic shoes (with ESD symbol).
- For additional information see: 61 35 Information on electrostatic discharge (ESD) protection.

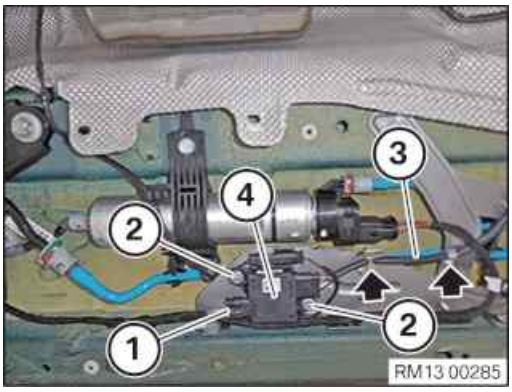

- Unlock and loosen connector (1).
- Loosen nuts (2).
- Feed out the cable (3) from the clamps (arrows) and remove.
- Guide out the evaluation electronics (4) for the diesel particulate sensor and remove.

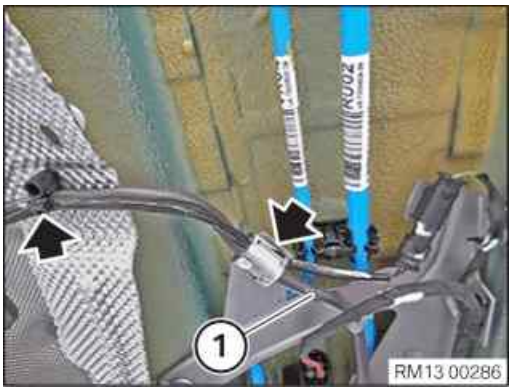

- Feed out the cable (1) from the diesel particulate sensor (arrows) and remove.

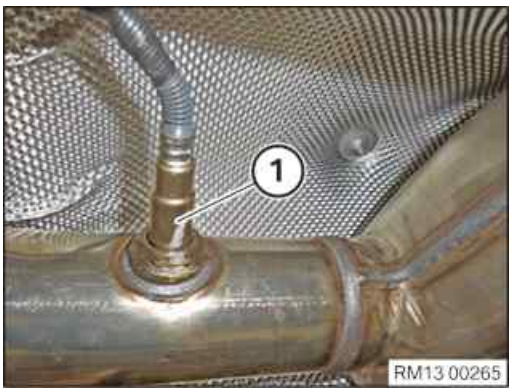

- Detach, feed out and remove diesel particulate sensor (1).

4 – Install the diesel particulate sensor

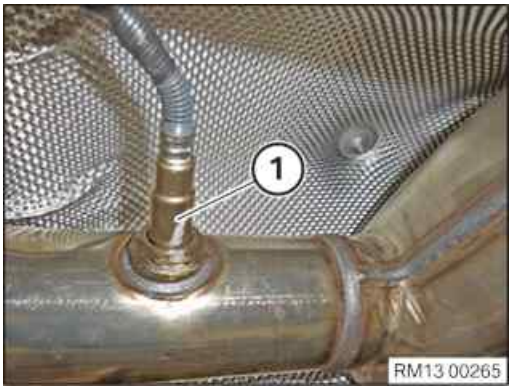

- Feed in and install diesel particulate sensor (1), tighten.

Diesel particulate sensor to exhaust system

Sensor		Tightening torque	50 Nm

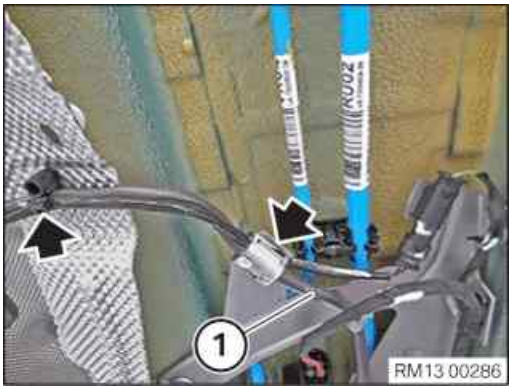

- Feed cable (1) from diesel particulate sensor into the clamps (arrows) and install.

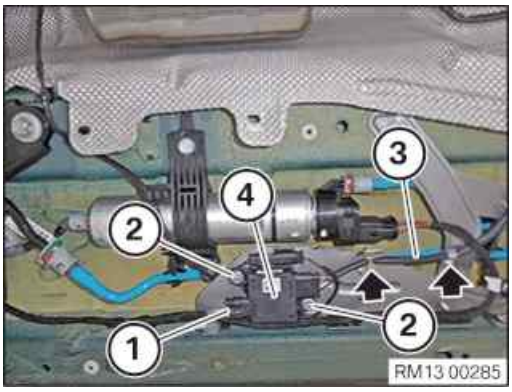

- Insert and install the evaluation electronics (4) for the diesel particulate sensor.
- Tighten nuts (2).

Evaluation electronics of diesel particulate sensor to holder

Hexagon nut		Tightening torque	8 Nm

- Insert cable (3) into the clamps (arrow) and install.
- Connect and lock the connector (1).

  The connector (1) must engage audibly.

POSTPROCESSES

5 – Installing underbody panelling , right

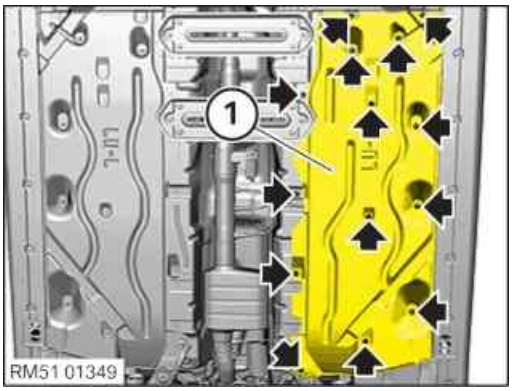

- Correctly position the underbody panelling (1).
- Tighten all bolts and nuts (arrows).

Underbody panelling, side

Hexagon screw		Tightening torque	2,6 Nm

Underbody panelling, side

Plastic nut		Tightening torque	2,6 Nm

6 – If installed: Installing underbody protection at rear

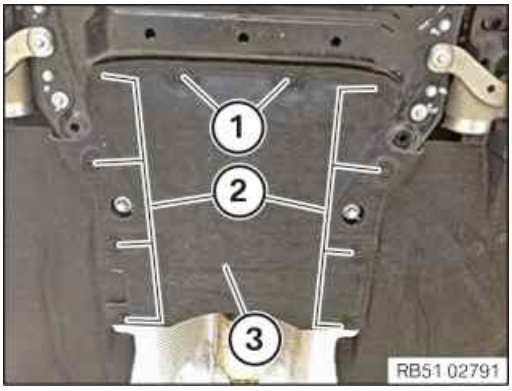

- Install the underbody protection (3).
- Tighten down screws (1) and (2).

Underbody protection to body

Screw		Tightening torque	3 Nm

Additional Information

Overview of Tightening Torques

Diesel particulate sensor to exhaust system — Used in step 4

Sensor		Tightening torque	50 Nm

Evaluation electronics of diesel particulate sensor to holder — Used in step 4

Hexagon nut		Tightening torque	8 Nm

Underbody panelling, side — Used in step 5

Hexagon screw		Tightening torque	2,6 Nm

Underbody panelling, side — Used in step 5

Plastic nut		Tightening torque	2,6 Nm

Underbody protection to body			Used in step 6
Screw		Tightening torque	3 Nm

Links

Repair instructions	Used in step
61 35 ... Notes on ESD protection (Electro Static Discharge)	3

13 62 589 Replace differential pressure sensor for diesel particulate filter

WARNING

Hot surfaces.

Risk of burning!

- Perform all work only on components that have cooled down.

PRELIMINARY WORK

1 – Remove the seal for the rear bonnet

NOTICE

Schematic diagram is for example purposes. Some parts may differ in certain details.

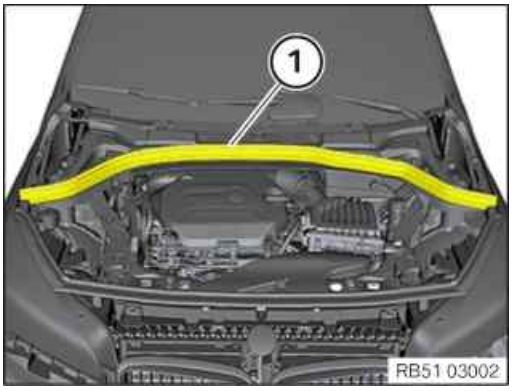

- Pull off rear bonnet seal (1) towards the top and remove.

2 – Removing front cowl panel cover

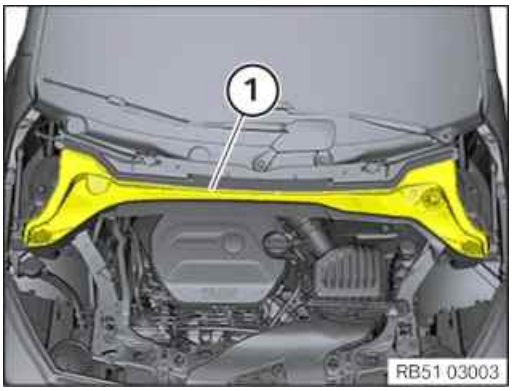

- Guide the front cowl panel cover (1) out toward the top and remove it.

3 – Remove left and right wiper arm

NOTICE

Description is for left component only. Procedure on the right side is identical.

▶ **Remove the wiper arm**

RISK OF DAMAGE

Damage to wiper console

While removing the wiper arms without using special tool, the wiper console can break.

- Removing the wiper arms must be carried out only using the prescribed special tool.
- Do not lift off wiper arm, else the wiper console may break on the predetermined breaking point for the pedestrian protection.

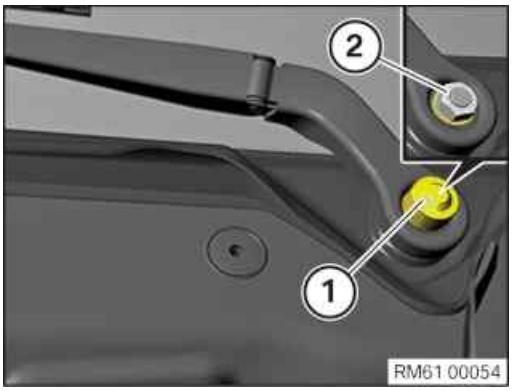

- Remove the protective cap (1).
- Loosen nut (2).

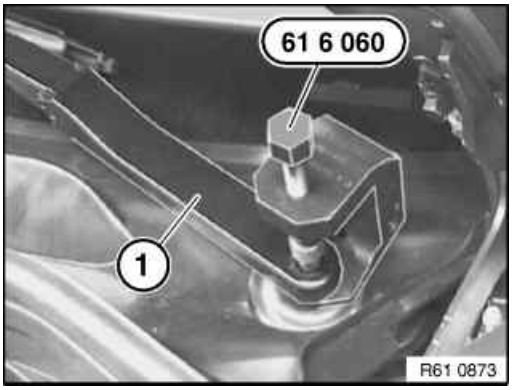

- Pull off the wiper arm (1) using special tool .

4 – Remove the gutter strip on the windscreen on the left and right

NOTICE

Description is for left component only. Procedure on the right side is identical.

▶ **Remove the gutter strip on the windscreen**

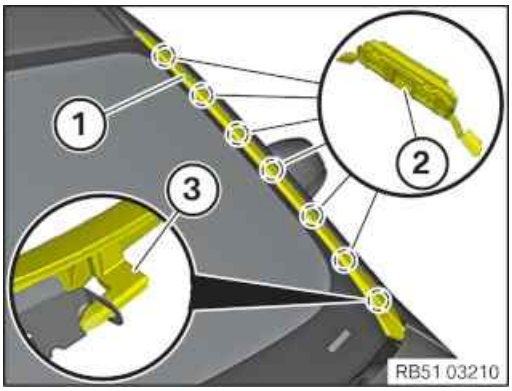

- Unclip the gutter strip (1) from the clips (2) beginning at the roof to the top.
- Feed the gutter strip (1) out of the guide (3).

5 – Remove the rear cowl panel cover

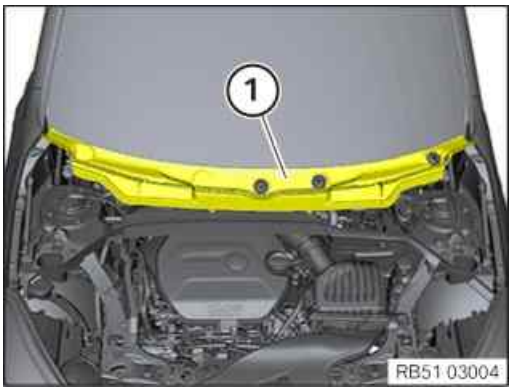

- Disengage and guide out the rear cowl panel cover (1) towards the top.

6 – Removing the upper bulkhead cover

- Loosen screws (1).

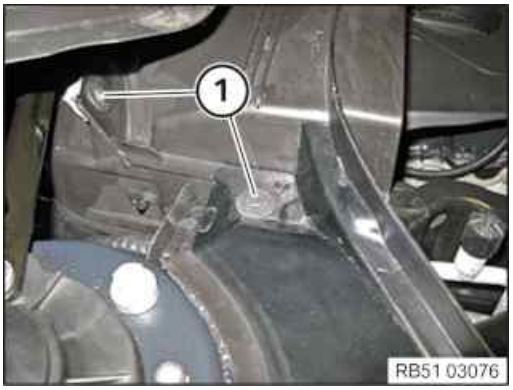

- Loosen screws (1).

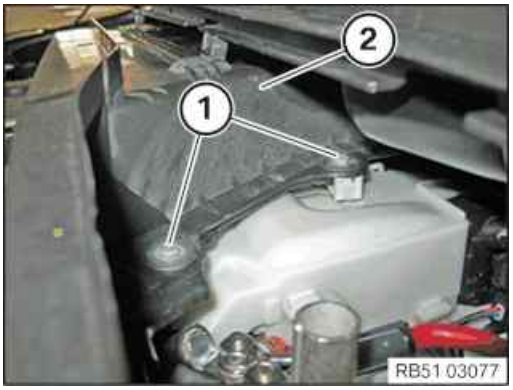

- Loosen screws (1).
- Feed out and remove the upper bulkhead cover (2).

7 – Removing the acoustic cover

WARNING

Hot surfaces.

Risk of burning!

- Perform all work only on components that have cooled down.

RISK OF DAMAGE

Damage to the acoustic cover.

Jerky movements during disassembly and excessive application of force during installation may result in breakage of the acoustic cover.

- Disassemble or mount the acoustic cover carefully.
- Disassemble or mount snap-lock couplings of the ball pivots one after the other.
- Disassemble or mount acoustic cover only at temperatures >20 °C.
- Use only distilled water as an auxiliary material during installation, no lubricants.

- Unclip the acoustic cover from the marked areas towards the top.

8 – Remove resonator

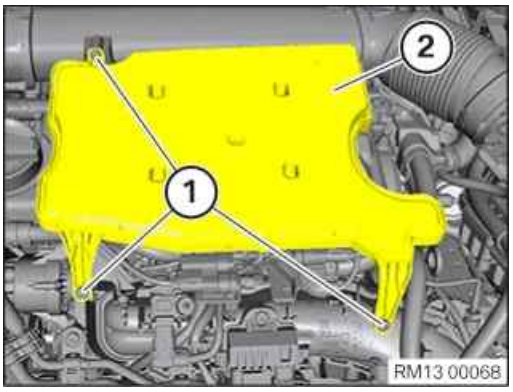

- Loosen screws (1).
- Guide out and remove the resonator (2).

9 – Removing the front underbody protection

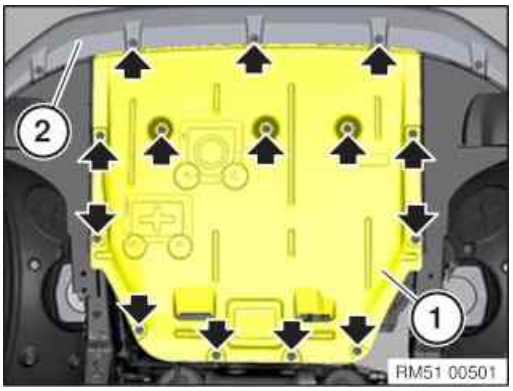

- Remove screws (arrows).
- Pull out and remove front underbody protection (1) under the bumper panel (2).

10 – Partially detach the clean air pipe

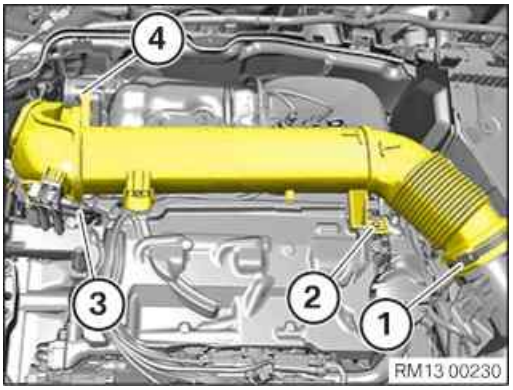

- Release the screw clamp (1).
- Loosen screw (2).
- Unlock and loosen connector (3).
- Loosen screw (4).

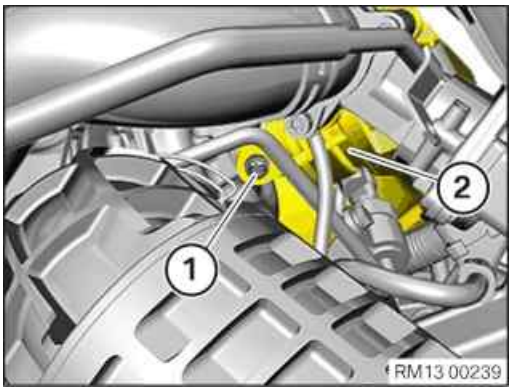

- Unscrew the screw (1) from the clean air pipe (2).

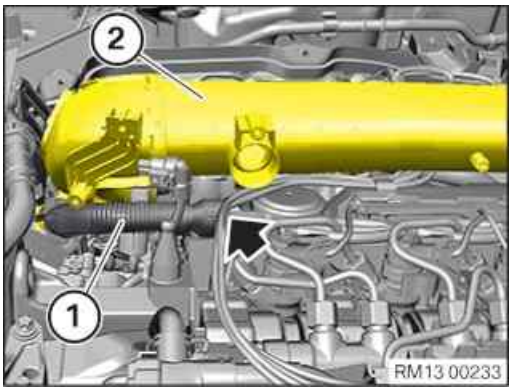

- Detach ventilation line (1) from clean air pipe (2) and set it aside.
- Detach ventilation line (1) from cylinder head cover (arrow).
- Remove the ventilation line (1).

- Thread out the clean air pipe (1) and set it aside as shown.

11 – Remove differential pressure sensor

RISK OF DAMAGE

Electrostatic discharge.

Damage to or destruction of electrical components.

- Leave electrical components in original packaging until just before they are installed. Use the original packaging only for any return shipments. Always package removed components straight away.
- Read and comply with user information on using the associated special tool 12 7 060.
- Only touch the housings of electrical components. Do not touch pins or multi-pin connectors directly.
- Wear electrically conductive clothing and antistatic shoes (with ESD symbol).
- For additional information see: 61 35 Information on electrostatic discharge (ESD) protection.

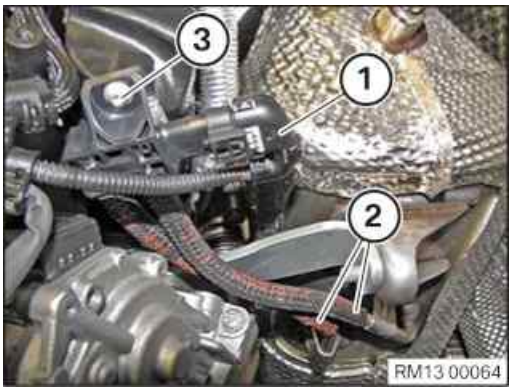

- Unlock and disconnect connector (1).
- Pull off pressure hose (2).
- Loosen screw (3).
- Feed out differential pressure sensor and remove.

12 – Installing differential pressure sensor

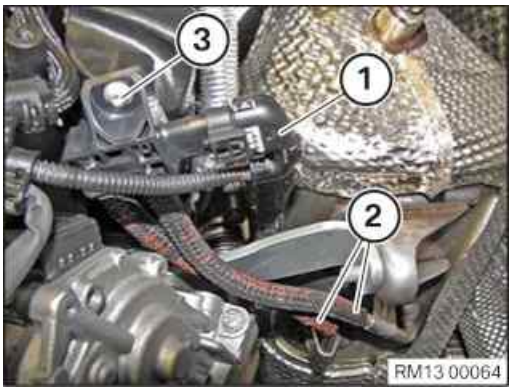

- Feed in and install the differential pressure sensor .
- Tighten down screw (3).

Differential pressure sensor to holder

Screw		Tightening torque	4 Nm

- Check pressure hoses (2).
- Renew any hardened pressure hoses (2).

  Parts: Pressure hoses
- Connect the pressure hoses (2) and secure them using 15 mm to 19 mm screw clamps.

Clamp for the pressure hose on the differential pressure sensor

Clamp 15–19mm		Tightening torque	3 Nm

- Connect and lock the connector (1).

  The connector (1) must engage audibly.

13 – Partially securing clean air pipe

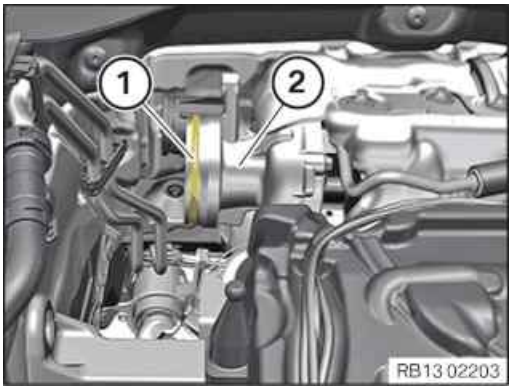

- Check the sealing ring (1) of the exhaust turbocharger (2) for damage and renew it if necessary.

- Feed in clean air pipe (1) and install.

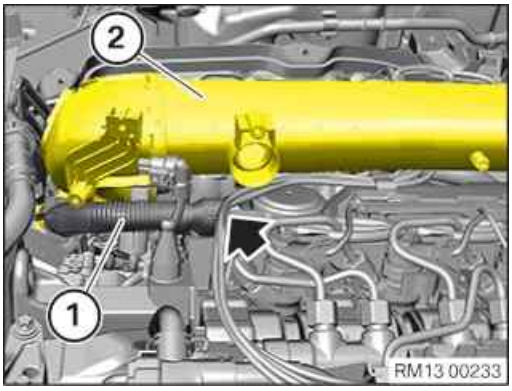

- Feed in ventilation line (1) at clean air pipe (2) and install.
- Feed in ventilation line (1) at cylinder head cover (arrow) and install.

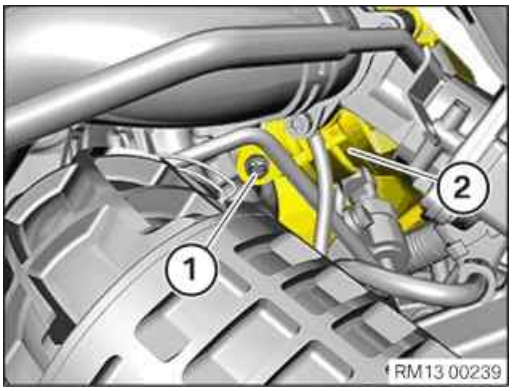

- Tighten screw (1) from clean air pipe (2).

Clean air pipe to exhaust turbocharger

Torx bolt BM8x25		Tightening torque	8 Nm

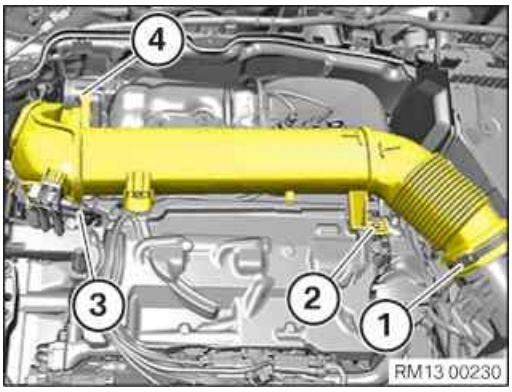

- Tighten down screw (4).

Clean air pipe to exhaust turbocharger

Torx bolt BM8x25		Tightening torque	8 Nm

- Connect and lock the connector (3).

  The connector (3) must engage audibly.
- Renew the screw (2).

  Parts: Screw
- Tighten down screw (2).

Clean air pipe to cylinder head cover

Oval-head screw	Renew screw.	Tightening torque	8 Nm

- Tighten the screw clamp (1).

Clean air pipe to intake silencer housing

Clamp		Tightening torque	3 Nm

14 – Installing the front underbody protection

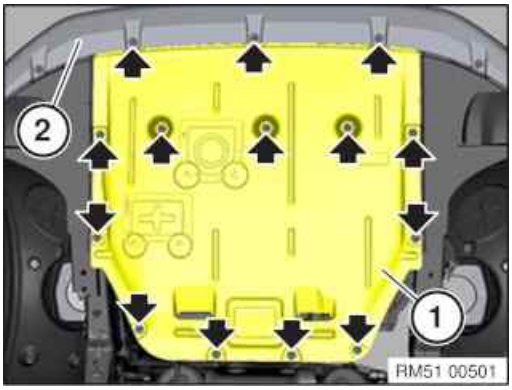

- Guide the front underbody protection (1) in under the bumper panel (2) and position it at the screw points.
- Tighten screws (arrows).

Underbody protection front

			3 Nm

15 – Install resonator

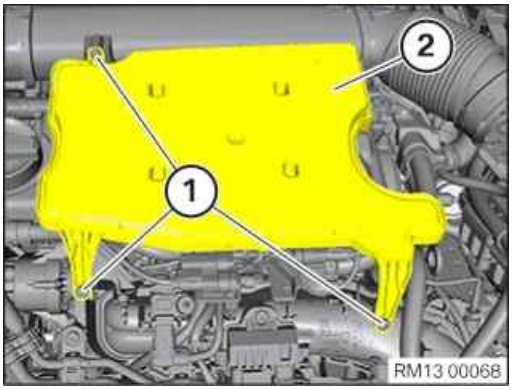

- Insert and install the resonator (2).
- Renew screws (1).

  Parts: Bolts
- Tighten the screws (1).

Resonator to manifold and clean air pipe

Screw TS6	Renew screw.	Tightening torque	5 Nm

16 – Install acoustic cover

RISK OF DAMAGE

Damage to the acoustic cover.

Jerky movements during disassembly and excessive application of force during installation may result in breakage of the acoustic cover.

- Disassemble or mount the acoustic cover carefully.
- Disassemble or mount snap-lock couplings of the ball pivots one after the other.
- Disassemble or mount acoustic cover only at temperatures >20 °C.
- Use only distilled water as an auxiliary material during installation, no lubricants.

- Check for correct installation of all rubber mounts in the acoustic cover (1).

- Clip in the acoustic cover into the holders in the indicated areas.
- Make sure that the acoustic cover engages audibly.

17 – Installing the upper bulkhead cover

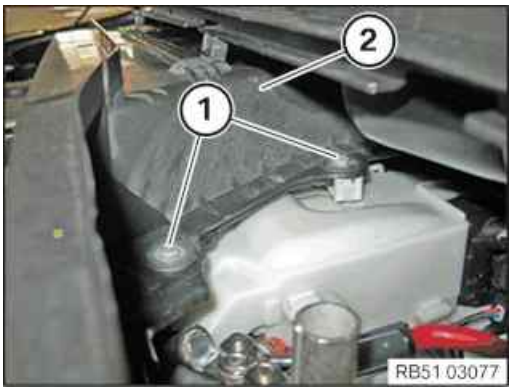

- Feed in and install cover (2) of the bulkhead at the top.
- Tighten the screws (1).

Bulkhead cover, top

Screw		Tightening torque	3 Nm

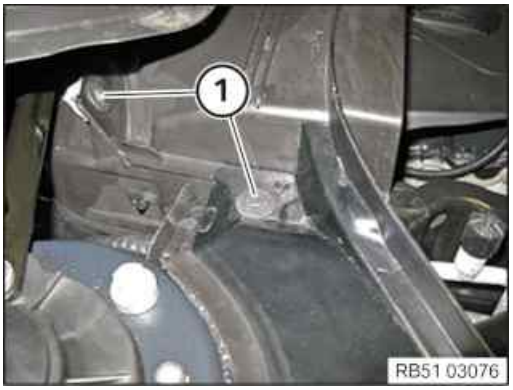

- Tighten the screws (1).

Bulkhead cover, top

Screw		Tightening torque	3 Nm

- Tighten the screws (1).

Bulkhead cover, top

Screw		Tightening torque	3 Nm

18 – Install the rear cowl panel cover

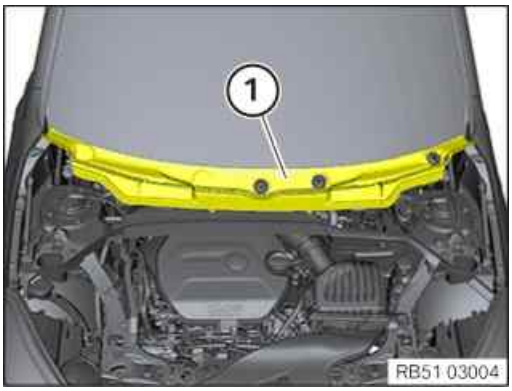

- Feed in and engage the rear cowl panel cover (1).

19 – Install the gutter strip on the windscreen on the left and right

NOTICE

Description is for left component only. Procedure on the right side is identical.

▸ **Install the gutter strip on the windscreen**

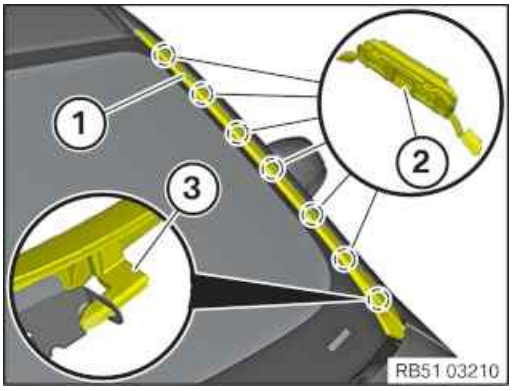

- Check the clamps (2) for damage and renew if necessary.
- Insert the gutter strip (1) with the guide (3).
- Align the gutter strip (1) at the roof and clip it in.

20 – Install left and right wiper arm

NOTICE

Description is for left component only. Procedure on the right side is identical.

▸ **Install the wiper arm**

TECHNICAL INFORMATION

The wiper system must be in zero position.
After installing the cowl panel cover and before fitting the wiper arm:
Activate the wiper system once to ensure that it has the correct installation position.

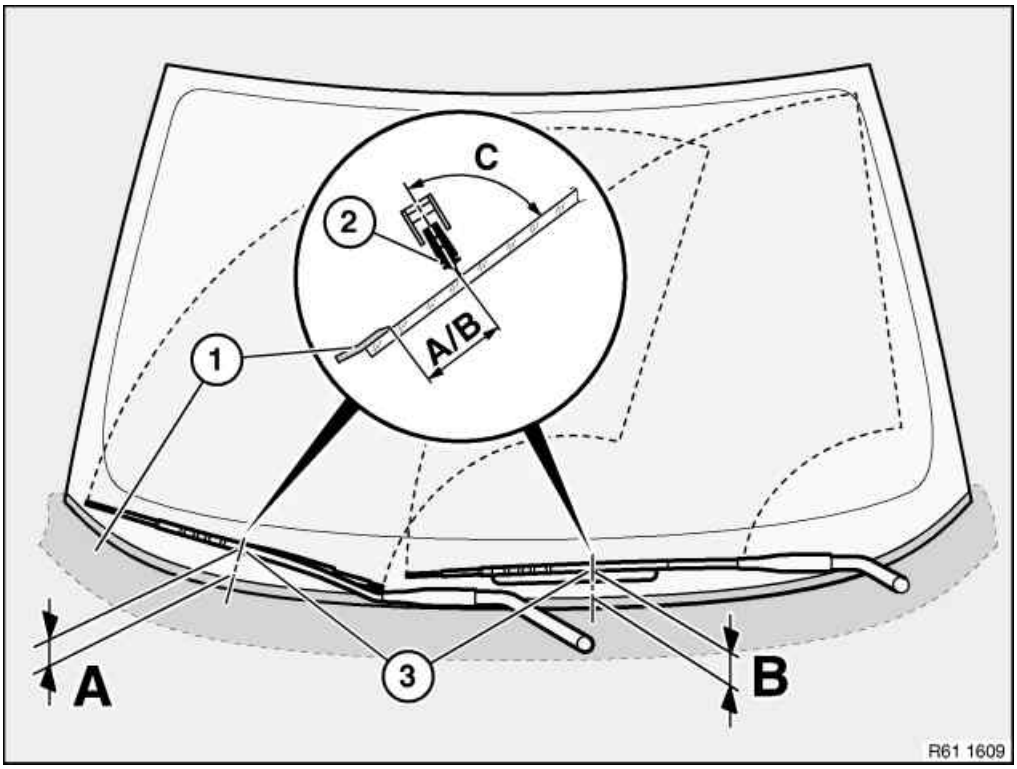

- Connect the wiper arm (3).
- Correctly position the wiper arm (2) in relation to the window edge (1).

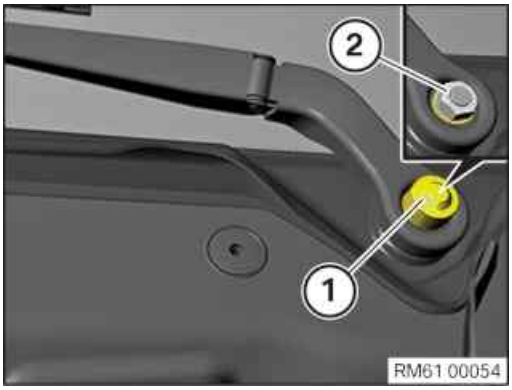

NOTICE

Description is for left component only. Procedure on the right side is identical.

- Tighten nut (2).

Windscreen wiper arm

Combination hexagon nut		Tightening torque	35 Nm

- Connect the protective cap (1).

21 – Installing front cowl panel cover

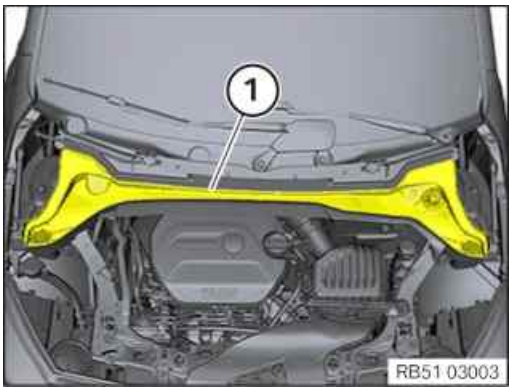

- Insert the cowl panel cover front (1) to the rear and install.
- Check cowl panel cover at front is correctly seated (1).

22 – Install the seal for the bonnet

NOTICE

Schematic diagram is for example purposes. Some parts may differ in certain details.

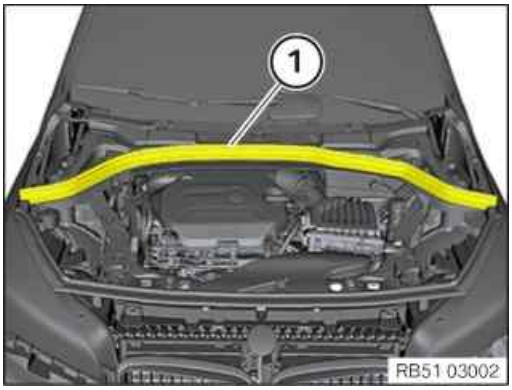

- Install bonnet seal at rear (1).
- Ensure that the rear bonnet seal (1) is fitted correctly.

23 – Replacement: Reset adaptation values

- Reset the adaptation values with the diagnosis system:
  - Power train
  - DDE / DME
  - Reset adaptations
  - Delete adaptations

Additional Information

Overview of Tightening Torques

Differential pressure sensor to holder			Used in step 12
Screw		Tightening torque	4 Nm

Clamp for the pressure hose on the differential pressure sensor			Used in step 12
Clamp 15–19mm		Tightening torque	3 Nm

Clean air pipe to exhaust turbocharger			Used in step 13
Torx bolt BM8x25		Tightening torque	8 Nm

Clean air pipe to cylinder head cover			Used in step 13
Oval-head screw	Renew screw.	Tightening torque	8 Nm

Clean air pipe to intake silencer housing			Used in step 13
Clamp		Tightening torque	3 Nm

Underbody protection front			Used in step 14
			3 Nm

Resonator to manifold and clean air pipe			Used in step 15
Screw TS6	Renew screw.	Tightening torque	5 Nm

Bulkhead cover, top			Used in step 17
Screw		Tightening torque	3 Nm

Windscreen wiper arm			Used in step 20
Combination hexagon nut		Tightening torque	35 Nm

Overview of Special Tools

Overview Technical Data

Links

Repair instructions	Used in step
61 35 ... Notes on ESD protection (Electro Static Discharge)	11

13 62 667 Replace exhaust gas pressure sensor before exhaust turbocharger

WARNING

Hot surfaces.

Risk of burning!

- Perform all work only on components that have cooled down.

PRELIMINARY WORK

1 – Remove the seal for the rear bonnet

NOTICE

Schematic diagram is for example purposes. Some parts may differ in certain details.

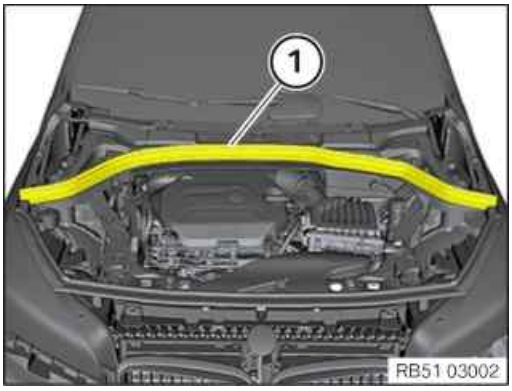

- Pull off rear bonnet seal (1) towards the top and remove.

2 – Removing front cowl panel cover

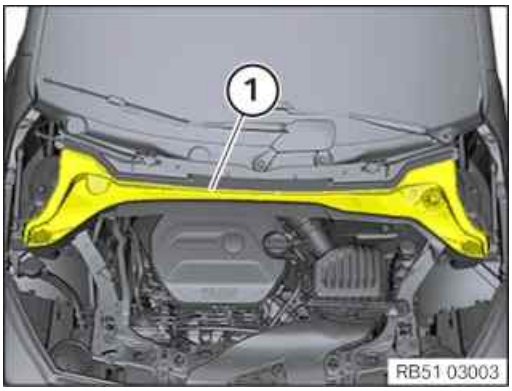

- Guide the front cowl panel cover (1) out toward the top and remove it.

3 – Remove left and right wiper arm

NOTICE

Description is for left component only. Procedure on the right side is identical.

▶ **Remove the wiper arm**

RISK OF DAMAGE

Damage to wiper console

While removing the wiper arms without using special tool, the wiper console can break.

- Removing the wiper arms must be carried out only using the prescribed special tool.
- Do not lift off wiper arm, else the wiper console may break on the predetermined breaking point for the pedestrian protection.

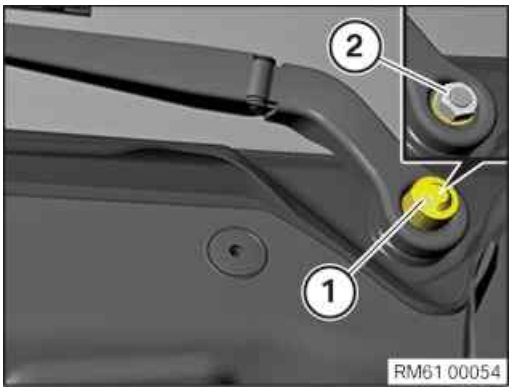

- Remove the protective cap (1).
- Loosen nut (2).

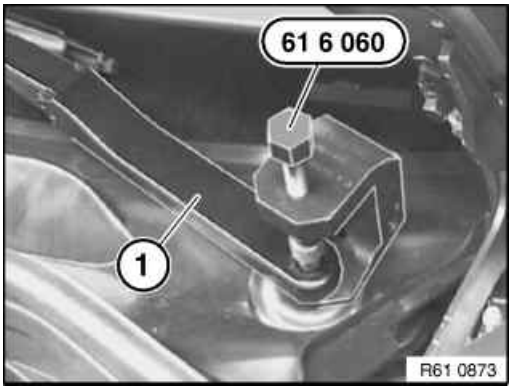

- Pull off the wiper arm (1) using special tool .

4 – Remove the gutter strip on the windscreen on the left and right

NOTICE

Description is for left component only. Procedure on the right side is identical.

▶ **Remove the gutter strip on the windscreen**

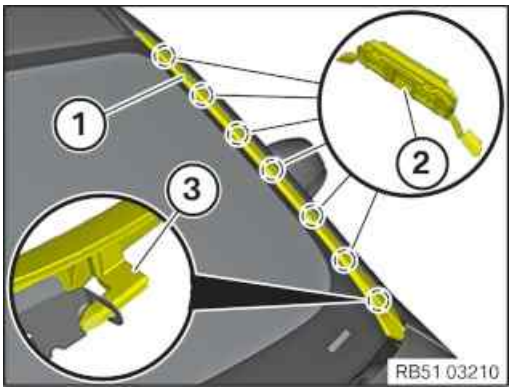

- Unclip the gutter strip (1) from the clips (2) beginning at the roof to the top.
- Feed the gutter strip (1) out of the guide (3).

5 – Remove the rear cowl panel cover

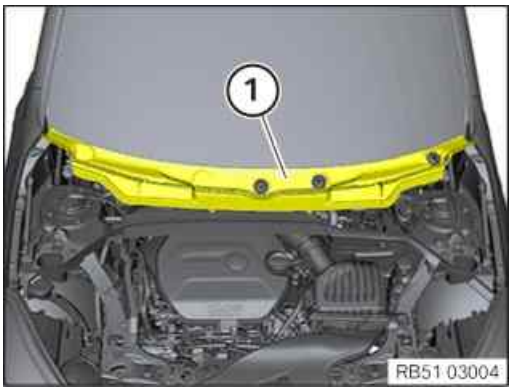

- Disengage and guide out the rear cowl panel cover (1) towards the top.

6 – Removing the upper bulkhead cover

- Loosen screws (1).

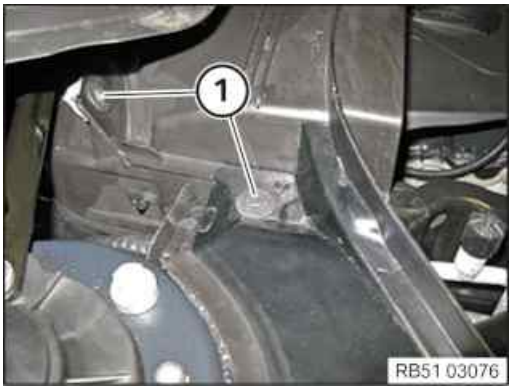

- Loosen screws (1).

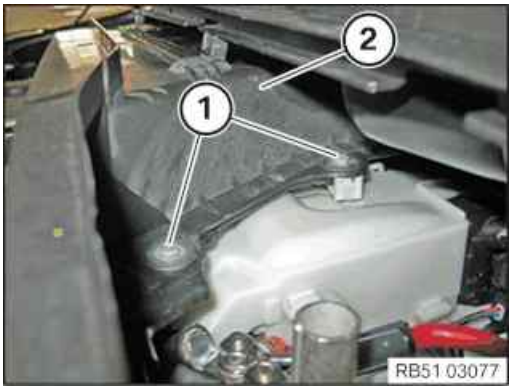

- Loosen screws (1).
- Feed out and remove the upper bulkhead cover (2).

7 – Removing the acoustic cover

WARNING

Hot surfaces.

Risk of burning!

- Perform all work only on components that have cooled down.

RISK OF DAMAGE

Damage to the acoustic cover.

Jerky movements during disassembly and excessive application of force during installation may result in breakage of the acoustic cover.

- Disassemble or mount the acoustic cover carefully.
- Disassemble or mount snap-lock couplings of the ball pivots one after the other.
- Disassemble or mount acoustic cover only at temperatures >20 °C.
- Use only distilled water as an auxiliary material during installation, no lubricants.

- Unclip the acoustic cover from the marked areas towards the top.

8 – Remove resonator

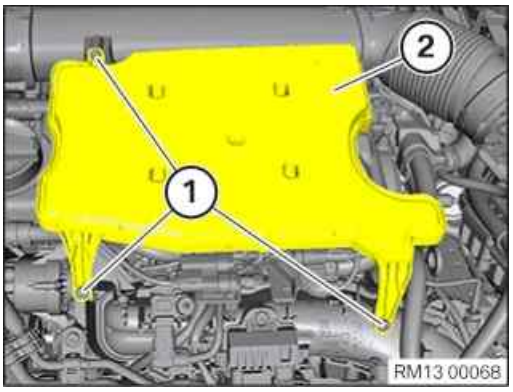

- Loosen screws (1).
- Guide out and remove the resonator (2).

9 – Removing the front underbody protection

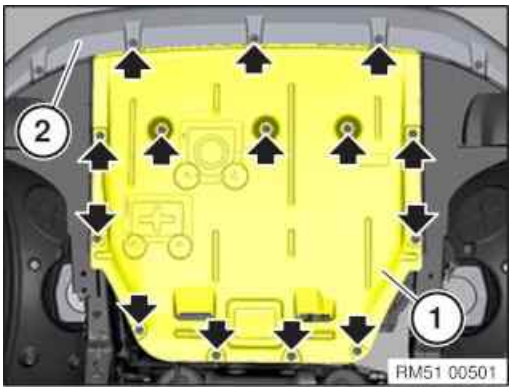

- Remove screws (arrows).
- Pull out and remove front underbody protection (1) under the bumper panel (2).

10 – Partially detach the clean air pipe

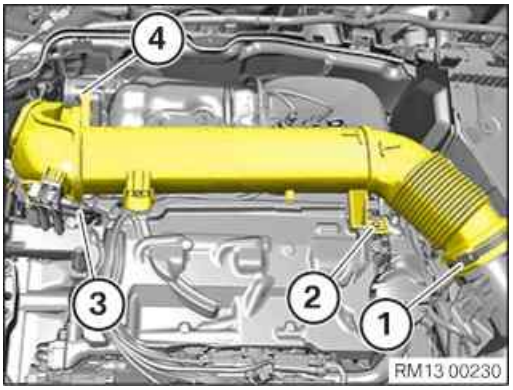

- Release the screw clamp (1).
- Loosen screw (2).
- Unlock and loosen connector (3).
- Loosen screw (4).

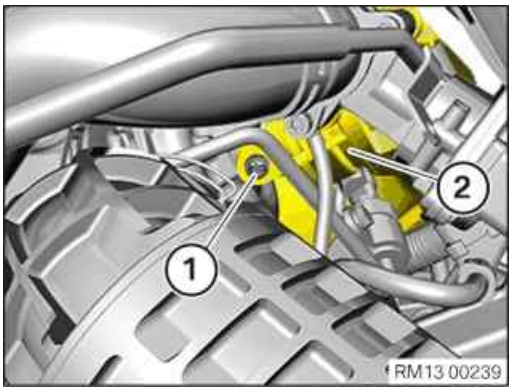

- Unscrew the screw (1) from the clean air pipe (2).

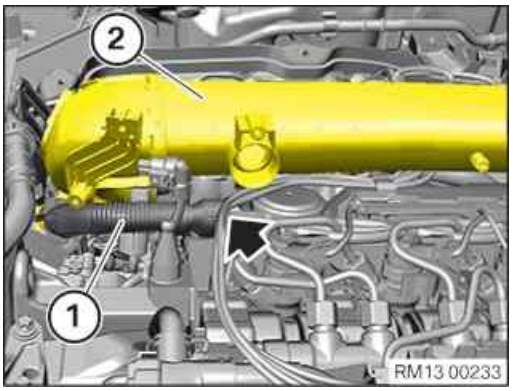

- Detach ventilation line (1) from clean air pipe (2) and set it aside.
- Detach ventilation line (1) from cylinder head cover (arrow).
- Remove the ventilation line (1).

- Thread out the clean air pipe (1) and set it aside as shown.

MAIN WORK

11 – Removing the exhaust gas pressure sensor

RISK OF DAMAGE

Electrostatic discharge.

Damage to or destruction of electrical components.

- Leave electrical components in original packaging until just before they are installed. Use the original packaging only for any return shipments. Always package removed components straight away.
- Read and comply with user information on using the associated special tool 12 7 060.
- Only touch the housings of electrical components. Do not touch pins or multi-pin connectors directly.
- Wear electrically conductive clothing and antistatic shoes (with ESD symbol).
- For additional information see: 61 35 Information on electrostatic discharge (ESD) protection.

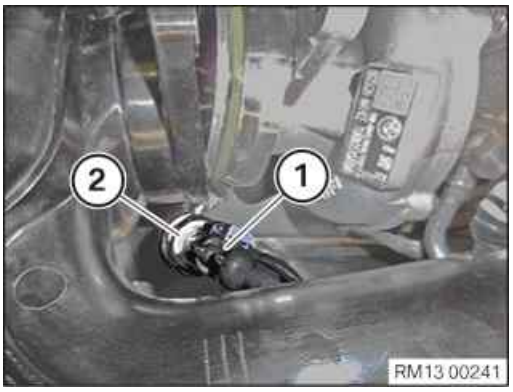

- Unlock and disconnect the plug connection (1).
- Detach the exhaust pressure sensor (2).
- Guide out and remove the exhaust gas pressure sensor (2).

12 – Installing the exhaust gas pressure sensor

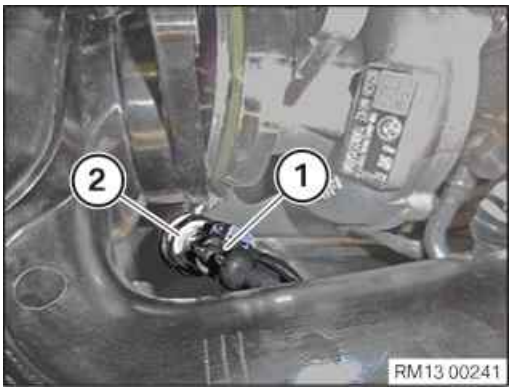

- Insert and install the exhaust gas pressure sensor (2).
- Tighten the exhaust gas pressure sensor (2).

Exhaust gas pressure sensor

Exhaust gas pressure sensor		Tightening torque	13,5 Nm

- Connect and lock the connector (1).

  The connector (1) must engage audibly.

POSTPROCESSES

13 – Partially securing clean air pipe

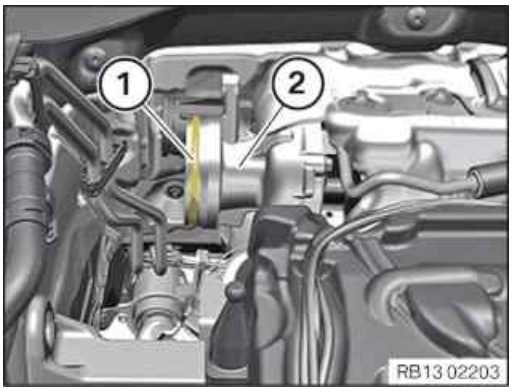

- Check the sealing ring (1) of the exhaust turbocharger (2) for damage and renew it if necessary.

- Feed in clean air pipe (1) and install.

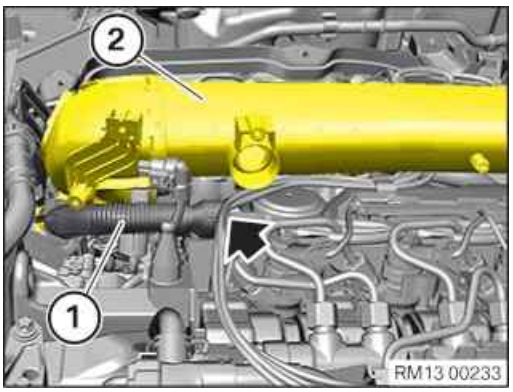

- Feed in ventilation line (1) at clean air pipe (2) and install.
- Feed in ventilation line (1) at cylinder head cover (arrow) and install.

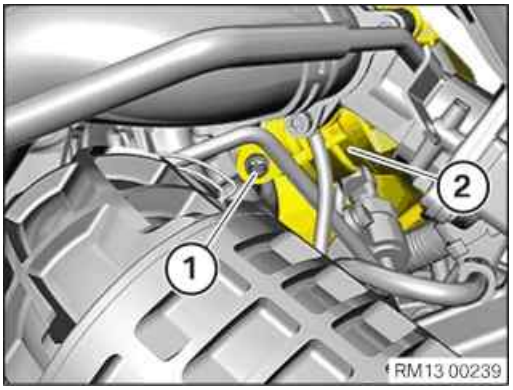

- Tighten screw (1) from clean air pipe (2).

Clean air pipe to exhaust turbocharger

Torx bolt BM8x25		Tightening torque	8 Nm

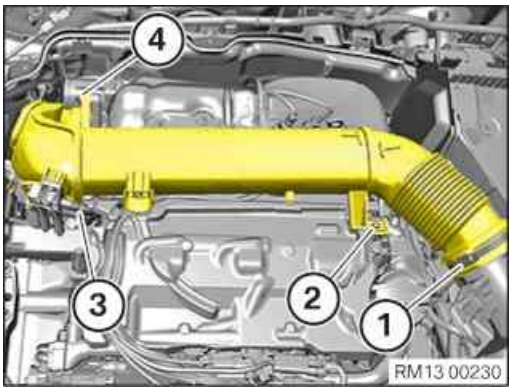

- Tighten down screw (4).

Clean air pipe to exhaust turbocharger

Torx bolt BM8x25		Tightening torque	8 Nm

- Connect and lock the connector (3).

  The connector (3) must engage audibly.
- Renew the screw (2).

  Parts: Screw
- Tighten down screw (2).

Clean air pipe to cylinder head cover

Oval-head screw	Renew screw.	Tightening torque	8 Nm

- Tighten the screw clamp (1).

Clean air pipe to intake silencer housing

Clamp		Tightening torque	3 Nm

14 – Installing the front underbody protection

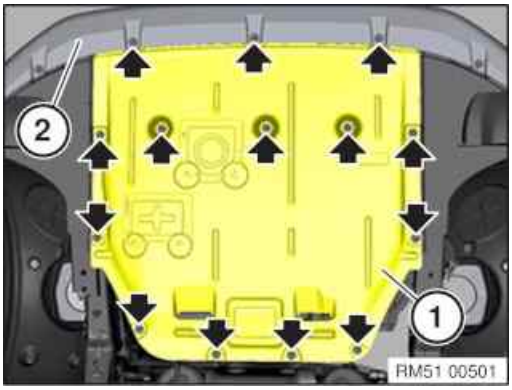

- Guide the front underbody protection (1) in under the bumper panel (2) and position it at the screw points.
- Tighten screws (arrows).

Underbody protection front

			3 Nm

15 – Install resonator

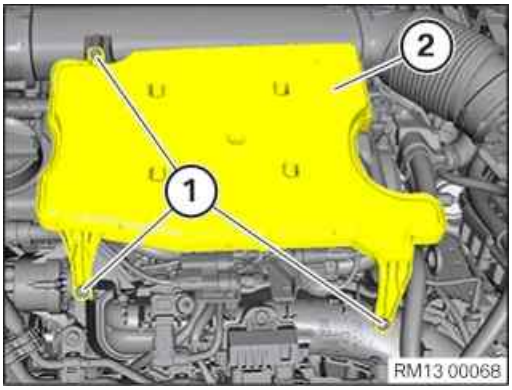

- Insert and install the resonator (2).
- Renew screws (1).

  Parts: Bolts
- Tighten the screws (1).

Resonator to manifold and clean air pipe

Screw TS6	Renew screw.	Tightening torque	5 Nm

16 – Install acoustic cover

RISK OF DAMAGE

Damage to the acoustic cover.

Jerky movements during disassembly and excessive application of force during installation may result in breakage of the acoustic cover.

- Disassemble or mount the acoustic cover carefully.
- Disassemble or mount snap-lock couplings of the ball pivots one after the other.
- Disassemble or mount acoustic cover only at temperatures >20 °C.
- Use only distilled water as an auxiliary material during installation, no lubricants.

- Check for correct installation of all rubber mounts in the acoustic cover (1).

- Clip in the acoustic cover into the holders in the indicated areas.
- Make sure that the acoustic cover engages audibly.

17 – Installing the upper bulkhead cover

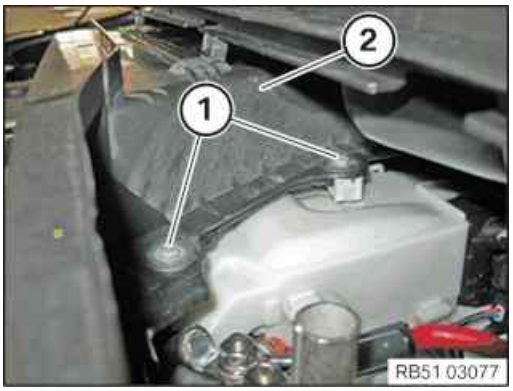

- Feed in and install cover (2) of the bulkhead at the top.
- Tighten the screws (1).

Bulkhead cover, top

Screw		Tightening torque	3 Nm

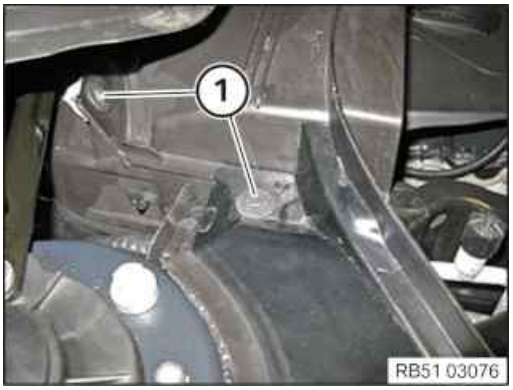

- Tighten the screws (1).

Bulkhead cover, top

Screw		Tightening torque	3 Nm

- Tighten the screws (1).

Bulkhead cover, top

Screw		Tightening torque	3 Nm

18 – Install the rear cowl panel cover

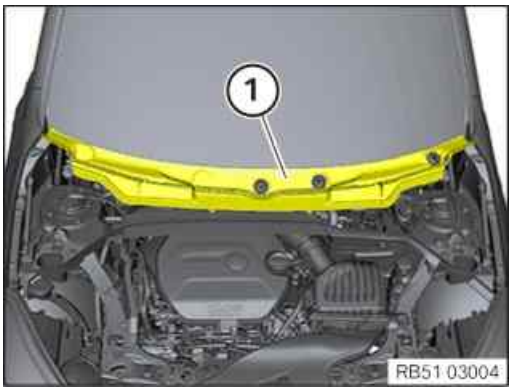

- Feed in and engage the rear cowl panel cover (1).

19 – Install the gutter strip on the windscreen on the left and right

NOTICE

Description is for left component only. Procedure on the right side is identical.

▸ **Install the gutter strip on the windscreen**

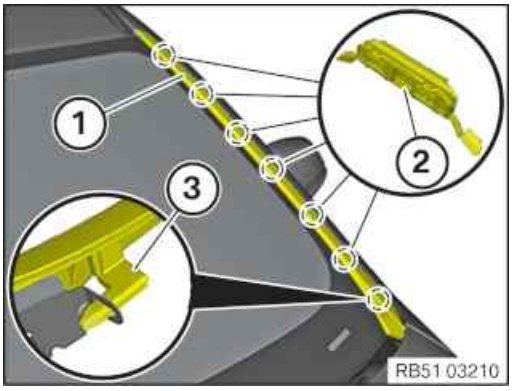

- Check the clamps (2) for damage and renew if necessary.
- Insert the gutter strip (1) with the guide (3).
- Align the gutter strip (1) at the roof and clip it in.

20 – Install left and right wiper arm

NOTICE

Description is for left component only. Procedure on the right side is identical.

▸ **Install the wiper arm**

TECHNICAL INFORMATION

The wiper system must be in zero position.
After installing the cowl panel cover and before fitting the wiper arm:
Activate the wiper system once to ensure that it has the correct installation position.

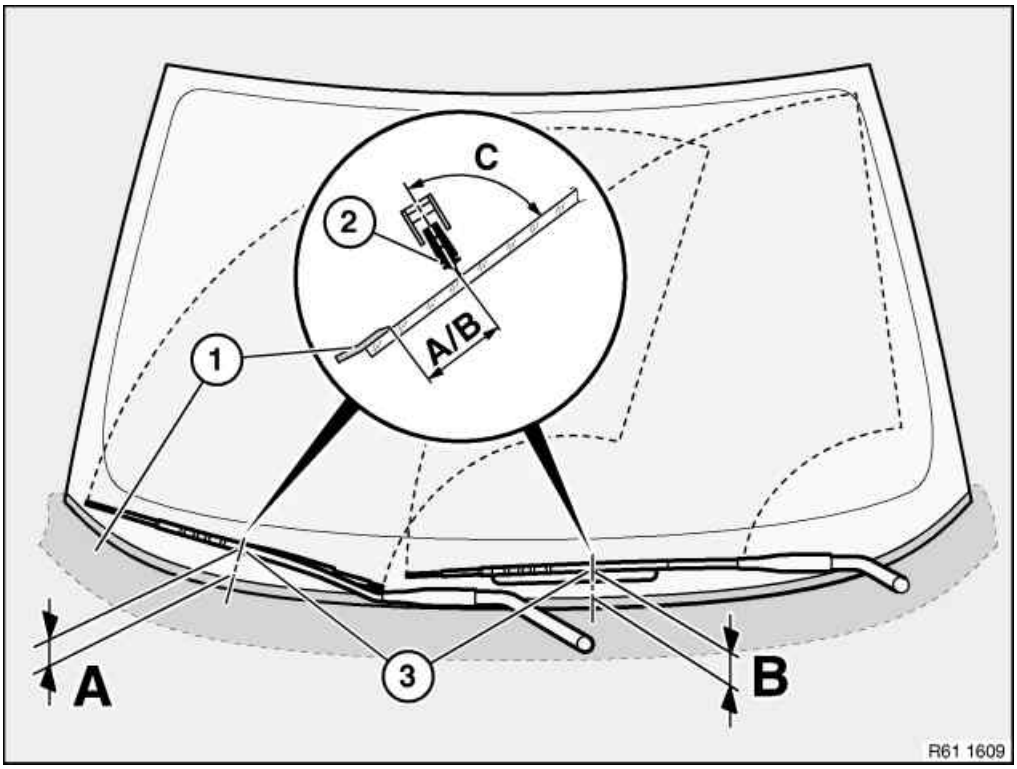

- Connect the wiper arm (3).
- Correctly position the wiper arm (2) in relation to the window edge (1).

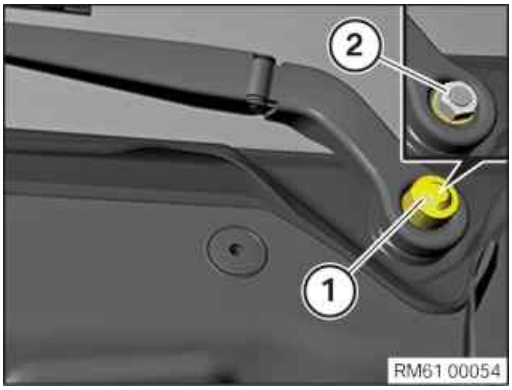

NOTICE

Description is for left component only. Procedure on the right side is identical.

- Tighten nut (2).

Windscreen wiper arm

Combination hexagon nut		Tightening torque	35 Nm

- Connect the protective cap (1).

21 – Installing front cowl panel cover

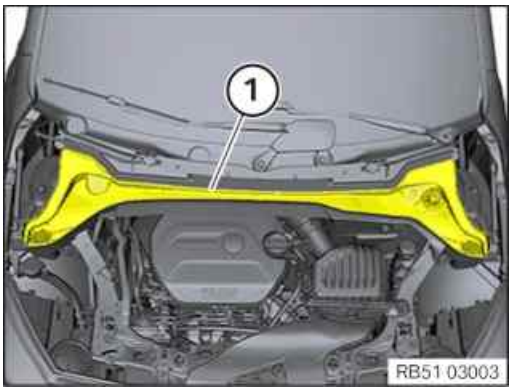

- Insert the cowl panel cover front (1) to the rear and install.
- Check cowl panel cover at front is correctly seated (1).

22 – Install the seal for the bonnet

NOTICE

Schematic diagram is for example purposes. Some parts may differ in certain details.

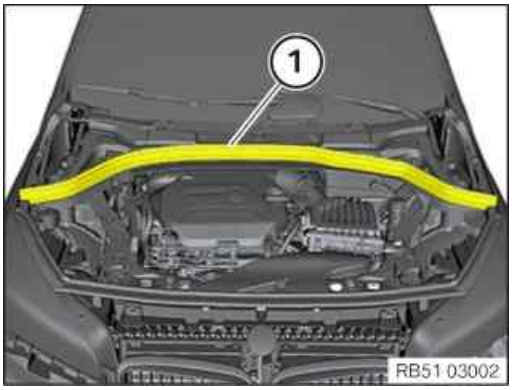

- Install bonnet seal at rear (1).
- Ensure that the rear bonnet seal (1) is fitted correctly.

Additional Information

Overview of Tightening Torques

Exhaust gas pressure sensor			Used in step 12
Exhaust gas pressure sensor		Tightening torque	13,5 Nm

Clean air pipe to exhaust turbocharger			Used in step 13
Torx bolt BM8x25		Tightening torque	8 Nm

Clean air pipe to cylinder head cover			Used in step 13
Oval-head screw	Renew screw.	Tightening torque	8 Nm

Clean air pipe to intake silencer housing			Used in step 13
Clamp		Tightening torque	3 Nm

Underbody protection front			Used in step 14
			3 Nm

Resonator to manifold and clean air pipe			Used in step 15
Screw TS6	Renew screw.	Tightening torque	5 Nm

Bulkhead cover, top			Used in step 17
Screw		Tightening torque	3 Nm

Windscreen wiper arm			Used in step 20
Combination hexagon nut		Tightening torque	35 Nm

Overview of Special Tools

Overview Technical Data

Links

Repair instructions	Used in step
61 35 ... Notes on ESD protection (Electro Static Discharge)	11

13 62 675 Replace exhaust temperature sensor of low-pressure exhaust-gas recirculation

WARNING

Hot surfaces.

Risk of burning!

- Perform all work only on components that have cooled down.

PRELIMINARY WORK

1 – Remove the seal for the rear bonnet

NOTICE

Schematic diagram is for example purposes. Some parts may differ in certain details.

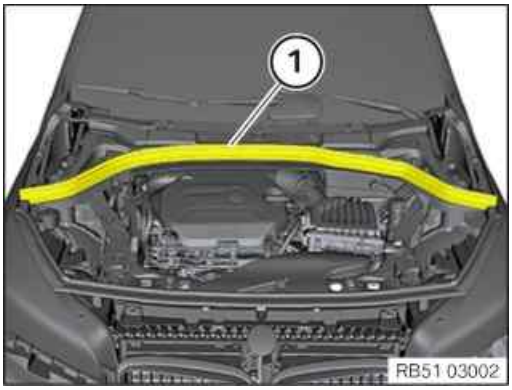

- Pull off rear bonnet seal (1) towards the top and remove.

2 – Removing front cowl panel cover

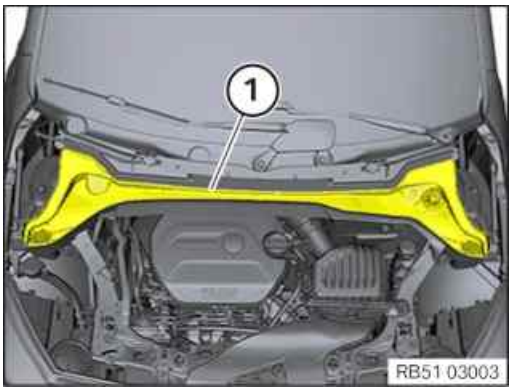

- Guide the front cowl panel cover (1) out toward the top and remove it.

3 – Remove left and right wiper arm

NOTICE

Description is for left component only. Procedure on the right side is identical.

▸ **Remove the wiper arm**

RISK OF DAMAGE

Damage to wiper console

While removing the wiper arms without using special tool, the wiper console can break.

- Removing the wiper arms must be carried out only using the prescribed special tool.
- Do not lift off wiper arm, else the wiper console may break on the predetermined breaking point for the pedestrian protection.

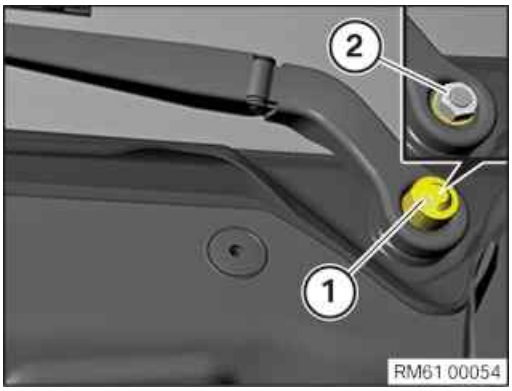

- Remove the protective cap (1).
- Loosen nut (2).

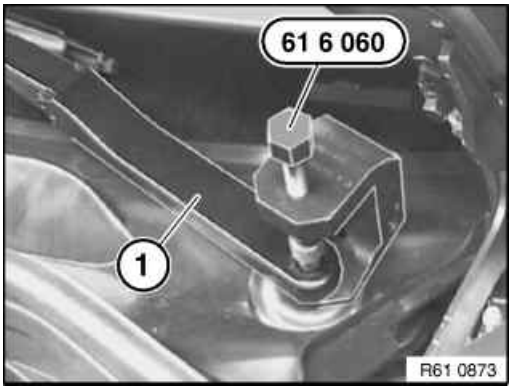

- Pull off the wiper arm (1) using special tool .

4 – Remove the gutter strip on the windscreen on the left and right

NOTICE

Description is for left component only. Procedure on the right side is identical.

▶ **Remove the gutter strip on the windscreen**

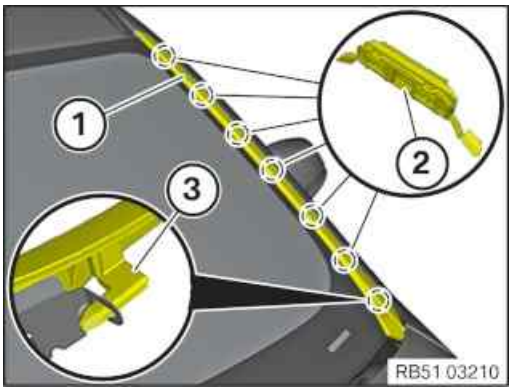

- Unclip the gutter strip (1) from the clips (2) beginning at the roof to the top.
- Feed the gutter strip (1) out of the guide (3).

5 – Remove the rear cowl panel cover

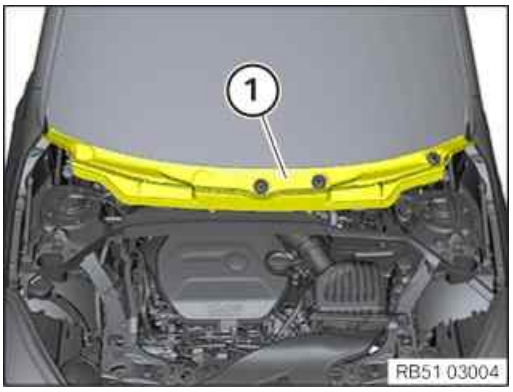

- Disengage and guide out the rear cowl panel cover (1) towards the top.

6 – Removing the upper bulkhead cover

- Loosen screws (1).

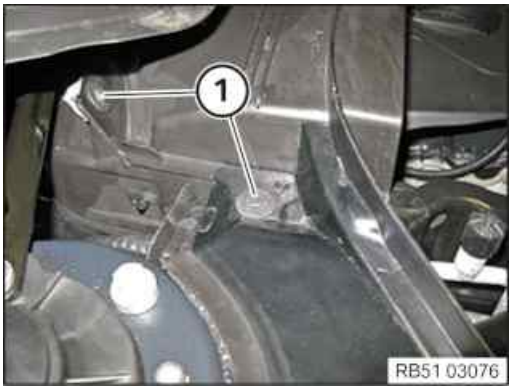

- Loosen screws (1).

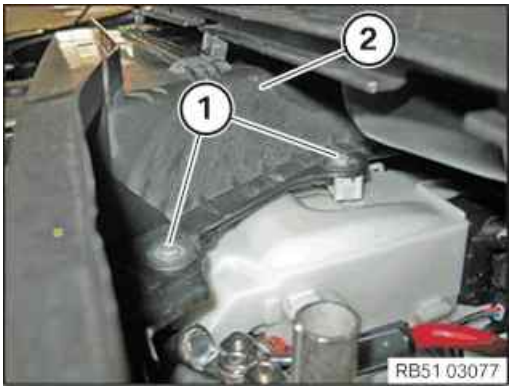

- Loosen screws (1).
- Feed out and remove the upper bulkhead cover (2).

7 – Removing the acoustic cover

WARNING

Hot surfaces.

Risk of burning!

- Perform all work only on components that have cooled down.

RISK OF DAMAGE

Damage to the acoustic cover.

Jerky movements during disassembly and excessive application of force during installation may result in breakage of the acoustic cover.

- Disassemble or mount the acoustic cover carefully.
- Disassemble or mount snap-lock couplings of the ball pivots one after the other.
- Disassemble or mount acoustic cover only at temperatures >20 °C.
- Use only distilled water as an auxiliary material during installation, no lubricants.

- Unclip the acoustic cover from the marked areas towards the top.

8 – Remove resonator

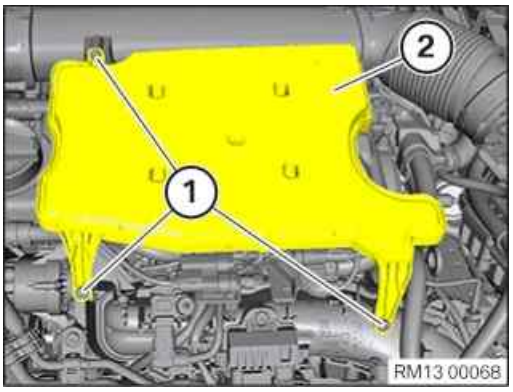

- Loosen screws (1).
- Guide out and remove the resonator (2).

9 – Removing the front underbody protection

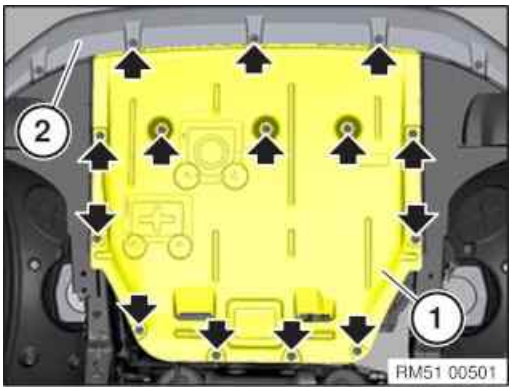

- Remove screws (arrows).
- Pull out and remove front underbody protection (1) under the bumper panel (2).

10 – Partially detach the clean air pipe

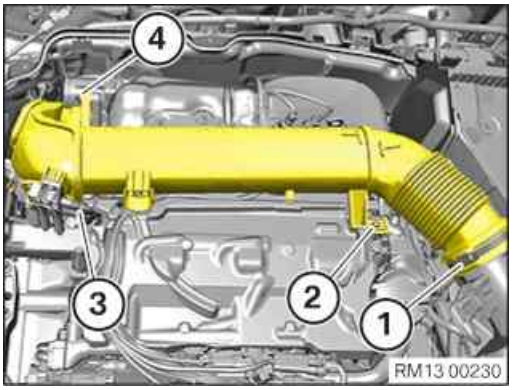

- Release the screw clamp (1).
- Loosen screw (2).
- Unlock and loosen connector (3).
- Loosen screw (4).

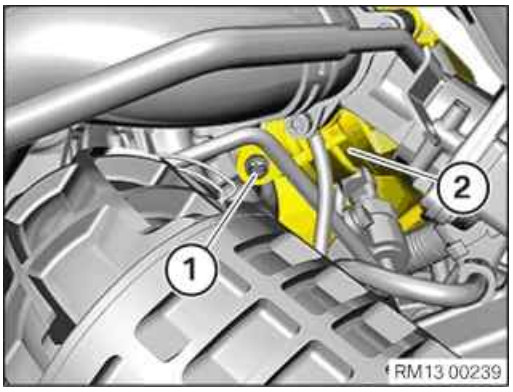

- Unscrew the screw (1) from the clean air pipe (2).

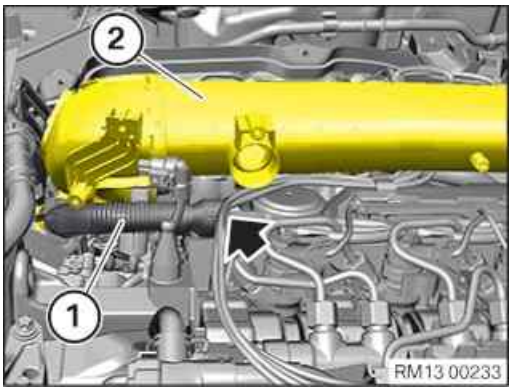

- Detach ventilation line (1) from clean air pipe (2) and set it aside.
- Detach ventilation line (1) from cylinder head cover (arrow).
- Remove the ventilation line (1).

- Thread out the clean air pipe (1) and set it aside as shown.

11 – Remove the rear bulkhead upper part

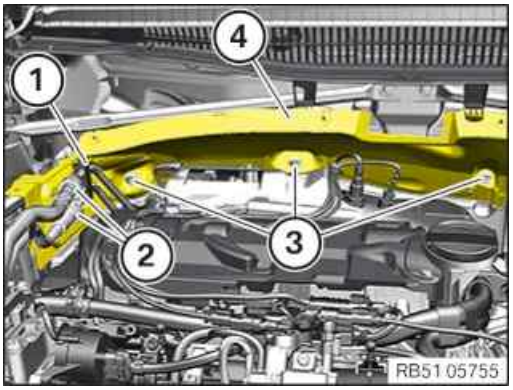

- Unlock the holder (1) and disconnect.
- Guide out and remove the fuel lines (2).
- Loosen screws (3).
- Guide out the rear bulkhead upper part (4) and remove.

MAIN WORK

12 – Removing the exhaust temperature sensor for the low-pressure exhaust-gas recirculation

WARNING

Hot surfaces.

Risk of burning!

- Perform all work only on components that have cooled down.

RISK OF DAMAGE

Electrostatic discharge.

Damage to or destruction of electrical components.

- Leave electrical components in original packaging until just before they are installed. Use the original packaging only for any return shipments. Always package removed components straight away.
- Read and comply with user information on using the associated special tool 12 7 060.
- Only touch the housings of electrical components. Do not touch pins or multi-pin connectors directly.
- Wear electrically conductive clothing and antistatic shoes (with ESD symbol).
- For additional information see: 61 35 Information on electrostatic discharge (ESD) protection.

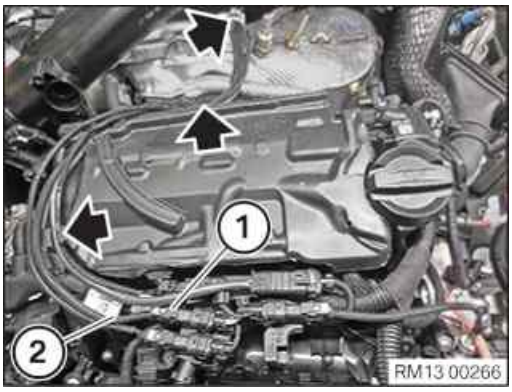

- Unlock and disconnect the plug connection (1).
- Feed out the cable (2) of the exhaust temperature sensor from the clamps (arrows) and remove.

- Thread the cable (1) of the exhaust temperature sensor out of the clamp (2) and remove.

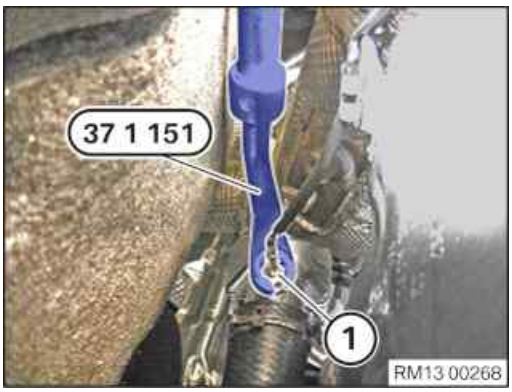

- Loosen and remove the exhaust temperature sensor (1) using the special tool **0 495 909 (37 1 151)**.

- Feed in and install the exhaust temperature sensor (1).
- Tighten the exhaust temperature sensor (1) with the special tool **0 495 909 (37 1 151)**.

Exhaust-gas temperature sensor to exhaust system

Exhaust-gas temperature sensor		Tightening torque	28 Nm

- Insert and install the cable (1) of the exhaust temperature sensor in the clamp (2).

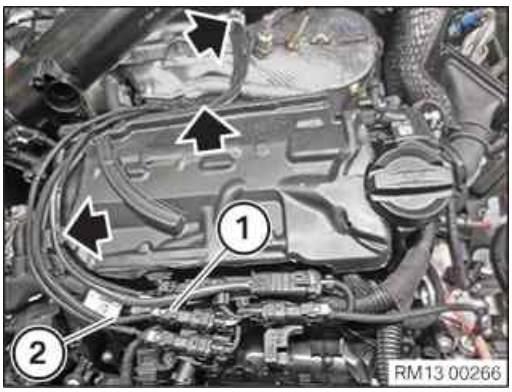

- Insert cable (2) of the exhaust temperature sensor on the clamps (arrows) and install.
- Connect and lock the connector (1).

  The connector (1) must engage audibly.

POSTPROCESSES

14 – Installing rear bulkhead upper part

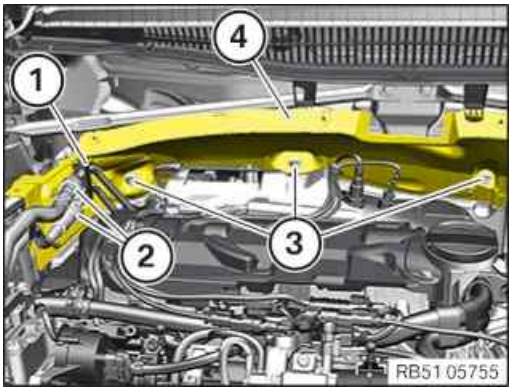

- Feed in and install the rear bulkhead upper part (4).
- Tighten down screws (3).

Rear bulkhead upper part to lower section of bulkhead

Oval-head screw		Tightening torque	5 Nm

- Feed the fuel line (2) into the holder (1) and install.
- Connect and lock the holder (1).

  The holder (1) must engage audibly.

15 – Partially securing clean air pipe

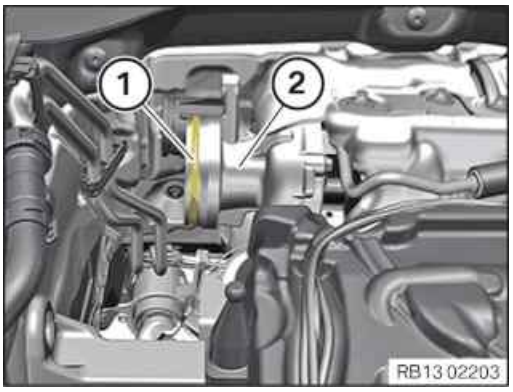

- Check the sealing ring (1) of the exhaust turbocharger (2) for damage and renew it if necessary.

- Feed in clean air pipe (1) and install.

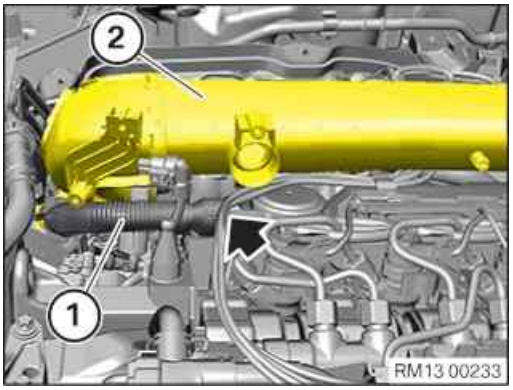

- Feed in ventilation line (1) at clean air pipe (2) and install.
- Feed in ventilation line (1) at cylinder head cover (arrow) and install.

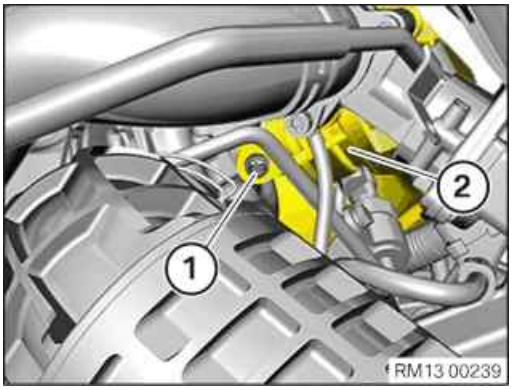

- Tighten screw (1) from clean air pipe (2).

Clean air pipe to exhaust turbocharger

Torx bolt BM8x25		Tightening torque	8 Nm

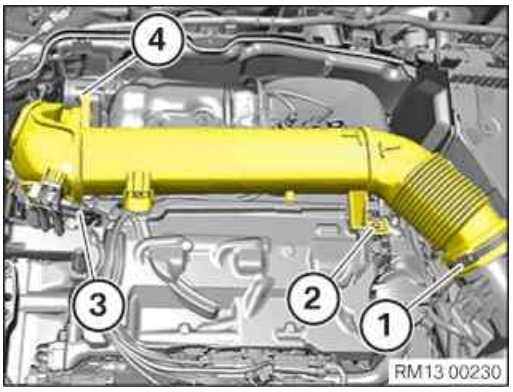

- Tighten down screw (4).

Clean air pipe to exhaust turbocharger

Torx bolt BM8x25		Tightening torque	8 Nm

- Connect and lock the connector (3).

  The connector (3) must engage audibly.
- Renew the screw (2).

  Parts: Screw
- Tighten down screw (2).

Clean air pipe to cylinder head cover

Oval-head screw	Renew screw.	Tightening torque	8 Nm

- Tighten the screw clamp (1).

Clean air pipe to intake silencer housing

Clamp		Tightening torque	3 Nm

16 – Installing the front underbody protection

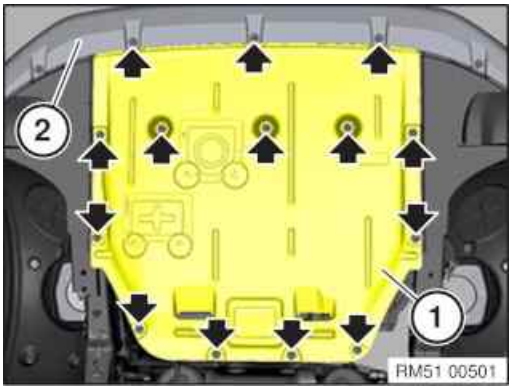

- Guide the front underbody protection (1) in under the bumper panel (2) and position it at the screw points.
- Tighten screws (arrows).

Underbody protection front

			3 Nm

17 – Install resonator

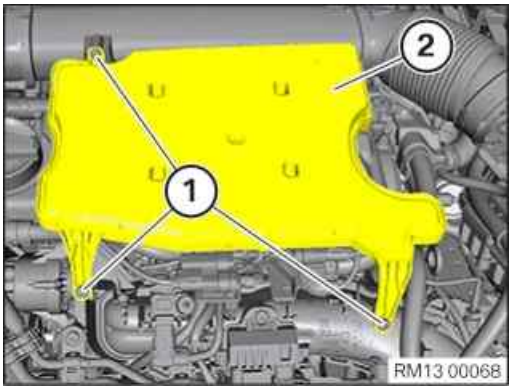

- Insert and install the resonator (2).
- Renew screws (1).

  Parts: Bolts
- Tighten the screws (1).

Resonator to manifold and clean air pipe

Screw TS6	Renew screw.	Tightening torque	5 Nm

18 – Install acoustic cover

RISK OF DAMAGE

Damage to the acoustic cover.

Jerky movements during disassembly and excessive application of force during installation may result in breakage of the acoustic cover.

- Disassemble or mount the acoustic cover carefully.
- Disassemble or mount snap-lock couplings of the ball pivots one after the other.
- Disassemble or mount acoustic cover only at temperatures >20 °C.
- Use only distilled water as an auxiliary material during installation, no lubricants.

- Check for correct installation of all rubber mounts in the acoustic cover (1).

- Clip in the acoustic cover into the holders in the indicated areas.
- Make sure that the acoustic cover engages audibly.

19 – Installing the upper bulkhead cover

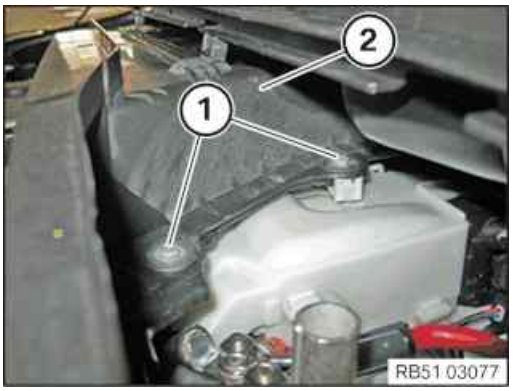

- Feed in and install cover (2) of the bulkhead at the top.
- Tighten the screws (1).

Bulkhead cover, top

Screw		Tightening torque	3 Nm

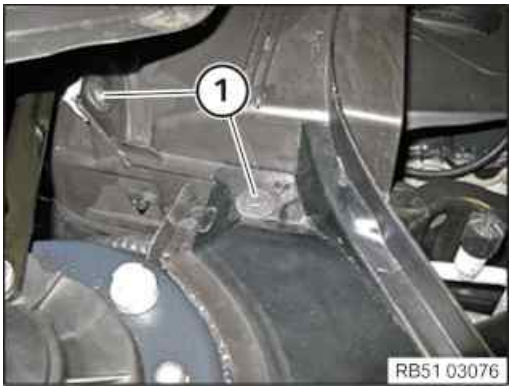

- Tighten the screws (1).

Bulkhead cover, top

Screw		Tightening torque	3 Nm

- Tighten the screws (1).

Bulkhead cover, top

Screw		Tightening torque	3 Nm

20 – Install the rear cowl panel cover

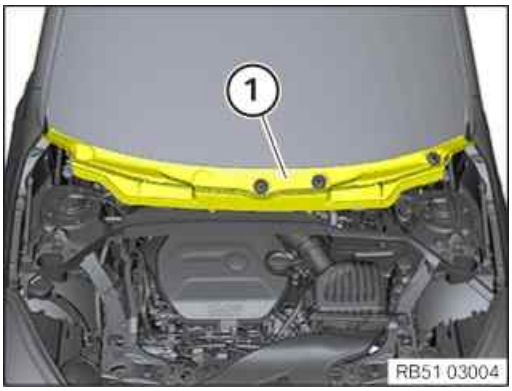

- Feed in and engage the rear cowl panel cover (1).

21 – Install the gutter strip on the windscreen on the left and right

NOTICE

Description is for left component only. Procedure on the right side is identical.

▸ **Install the gutter strip on the windscreen**

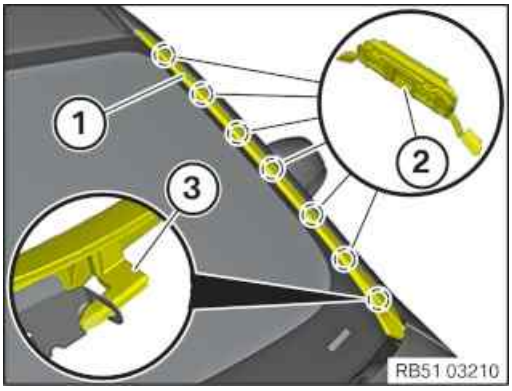

- Check the clamps (2) for damage and renew if necessary.
- Insert the gutter strip (1) with the guide (3).
- Align the gutter strip (1) at the roof and clip it in.

22 – Install left and right wiper arm

NOTICE

Description is for left component only. Procedure on the right side is identical.

▸ **Install the wiper arm**

TECHNICAL INFORMATION

The wiper system must be in zero position.
After installing the cowl panel cover and before fitting the wiper arm:
Activate the wiper system once to ensure that it has the correct installation position.

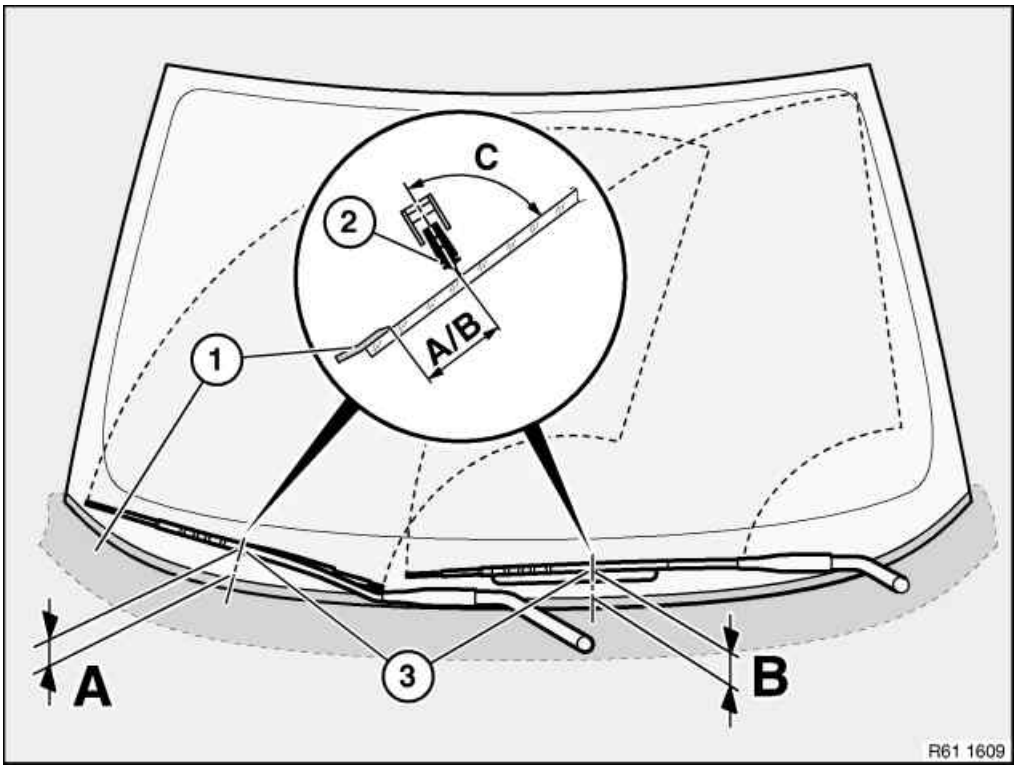

- Connect the wiper arm (3).
- Correctly position the wiper arm (2) in relation to the window edge (1).

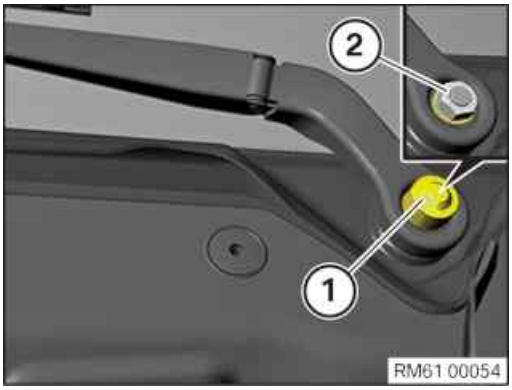

NOTICE

Description is for left component only. Procedure on the right side is identical.

- Tighten nut (2).

Windscreen wiper arm

Combination hexagon nut		Tightening torque	35 Nm

- Connect the protective cap (1).

23 – Installing front cowl panel cover

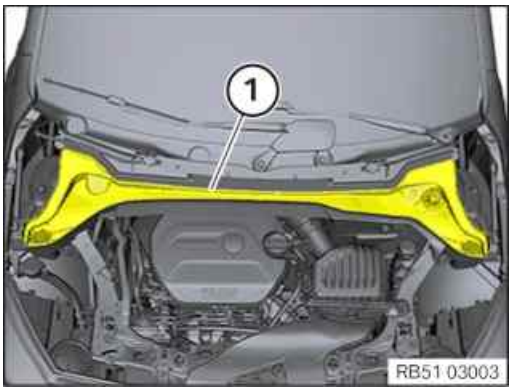

- Insert the cowl panel cover front (1) to the rear and install.
- Check cowl panel cover at front is correctly seated (1).

24 – Install the seal for the bonnet

NOTICE

Schematic diagram is for example purposes. Some parts may differ in certain details.

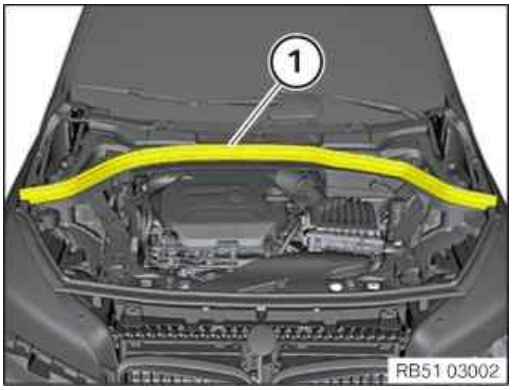

- Install bonnet seal at rear (1).
- Ensure that the rear bonnet seal (1) is fitted correctly.

Additional Information

Overview of Tightening Torques

Exhaust-gas temperature sensor to exhaust system			Used in step 13
Exhaust-gas temperature sensor		Tightening torque	28 Nm

Rear bulkhead upper part to lower section of bulkhead			Used in step 14
Oval-head screw		Tightening torque	5 Nm

Clean air pipe to exhaust turbocharger			Used in step 15
Torx bolt BM8x25		Tightening torque	8 Nm

Clean air pipe to cylinder head cover			Used in step 15
Oval-head screw	Renew screw.	Tightening torque	8 Nm

Clean air pipe to intake silencer housing			Used in step 15
Clamp		Tightening torque	3 Nm

Underbody protection front			Used in step 16
			3 Nm

Resonator to manifold and clean air pipe			Used in step 17
Screw TS6	Renew screw.	Tightening torque	5 Nm

Bulkhead cover, top			Used in step 19
Screw		Tightening torque	3 Nm

Windscreen wiper arm			Used in step 22
Combination hexagon nut		Tightening torque	35 Nm

Overview of Special Tools

0 495 909 (37 1 151) Socket wrench

Common		Used in step 12 13
Usage	(Socket wrench)SW14	
Included in the tool or work	0 495 908	
Storage location	B21	
Replaced by		
In connection with		
SI-Number	01 01 07 (333)	

Overview Technical Data

Links

Repair instructions	Used in step
61 35 ... Notes on ESD protection (Electro Static Discharge)	12

13 62 620 Replace nitrogen oxide sensor ahead of SCR catalytic converter

PRELIMINARY WORK

1 – Remove the intake neck for intake silencer housing

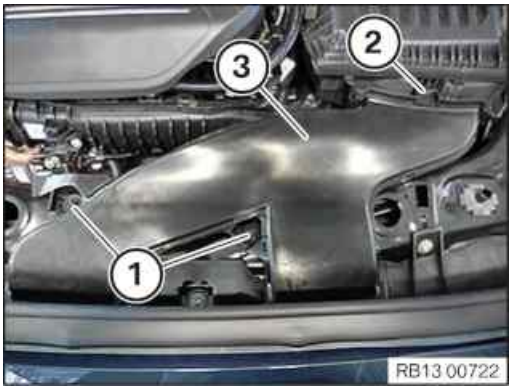

- Loosen nuts (1).
- Loosen the lock (2).
- Guide the intake neck (3) out and remove it.

2 – Removing intake silencer housing

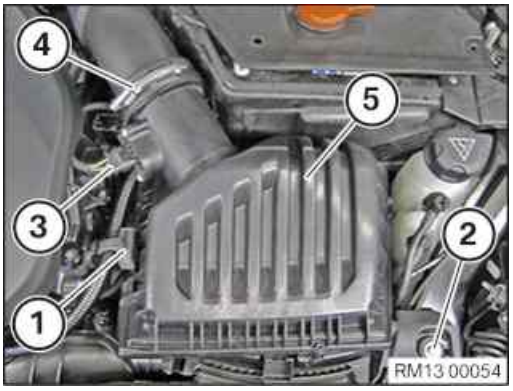

- Loosen the holder (1).
- Loosen screw (2).
- Unlock and loosen connector (3).
- Unfasten clamp (4).
- Pull out and remove the intake silencer housing (5) from the rubber mounts towards the top.

3 – Remove vehicle battery

WARNING

Working on 12 V vehicle electrical system.

Risk of short circuits! Risk of fire!

- Detach battery earth lead from battery.
- For additional batteries: Detach all battery earth leads from additional batteries.

TECHNICAL INFORMATION

For additional information see:
61 00 ... Safety information on handling the vehicle battery
61 00 / 12 00 ... Notes on disconnecting and connecting the vehicle battery
61 12 ... Notes on the intelligent battery sensor (IBS)

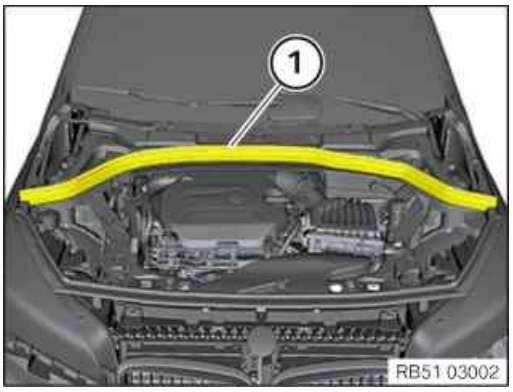

- pull off gasket (1) upwards.

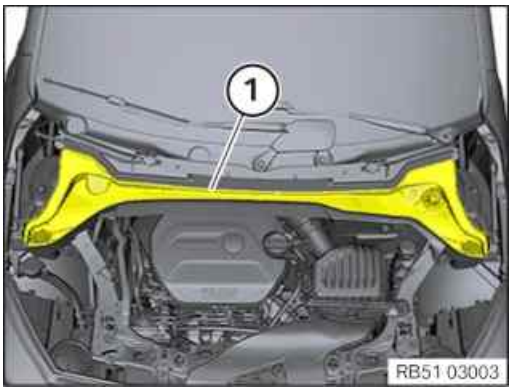

- Remove the cowl panel cover (1) to the top.

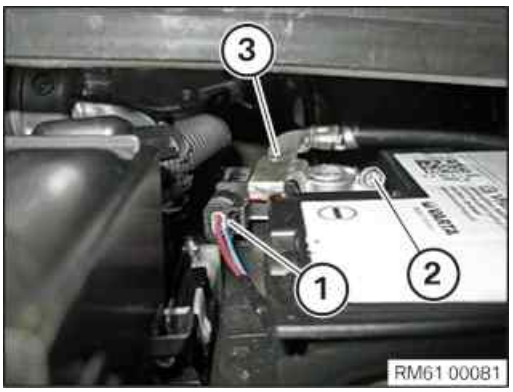

- Unlock and disconnect connector (1).
- Slacken nut (2).
- Disconnect the negative battery terminal (3).

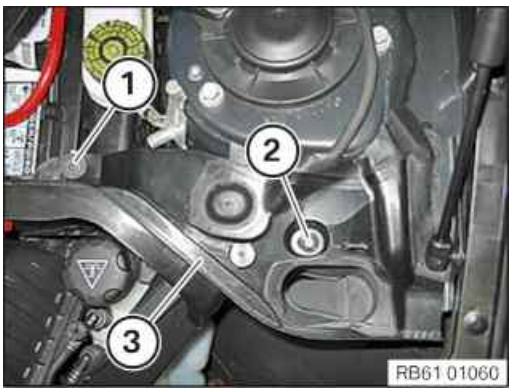

- Release the screw (1) and the expanding rivet (2).
- Remove the fixture for the gasket (3).

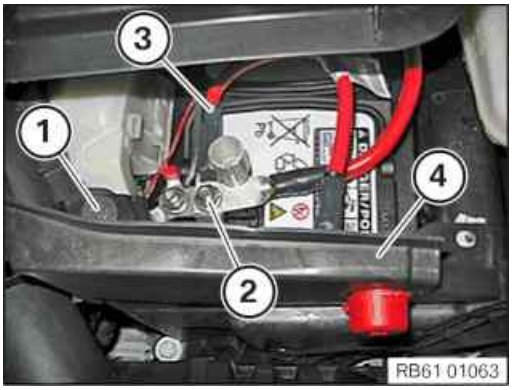

- Loosen screw (1).
- Unscrew the nut (2) and remove the positive battery cable (3) with the cover of the remote positive terminal (4).
- Tighten nuts (2) on the positive terminal hand-tight.

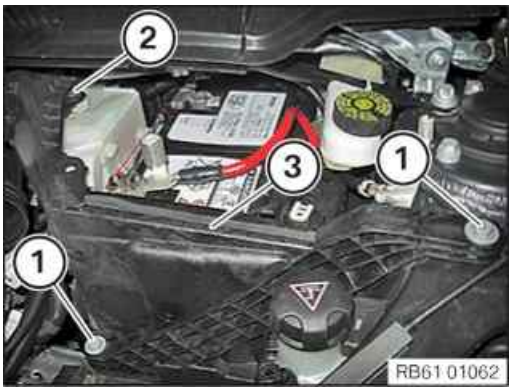

- Loosen screws (1).
- Unscrew the bolt (2) and guide the tension strut (3) out.

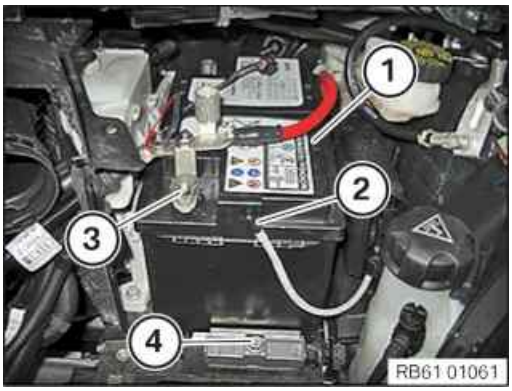

- Pull off the vent hose (2).
- Slacken the nut (3) on the positive terminal and remove the positive terminal.

WARNING

Unprotected battery terminals.

Risk of short circuits! Risk of fire!

- Cover the vehicle battery.

- Loosen the screw (4) and remove the holder.
- Remove vehicle battery (1).

4 – Removing the upper bulkhead cover

- Loosen screws (1).

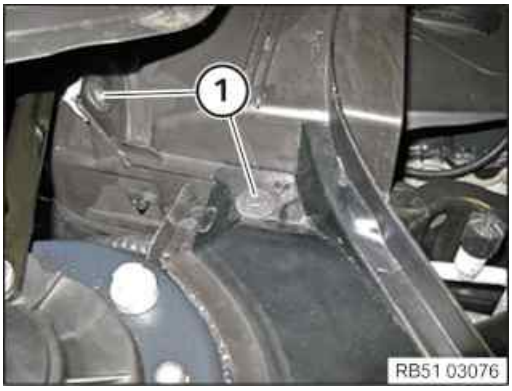

- Loosen screws (1).

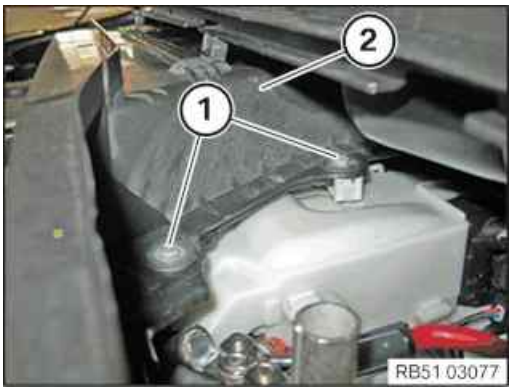

- Loosen screws (1).
- Feed out and remove the upper bulkhead cover (2).

5 – Remove electronics box

Prerequisite

Battery earth lead is disconnected.

RISK OF DAMAGE

Electrostatic discharge.

Damage to or destruction of electrical components.

- Leave electrical components in original packaging until just before they are installed. Use the original packaging only for any return shipments. Always package removed components straight away.
- Read and comply with user information on using the associated special tool 12 7 060.
- Only touch the housings of electrical components. Do not touch pins or multi-pin connectors directly.
- Wear electrically conductive clothing and antistatic shoes (with ESD symbol).
- For additional information see: 61 35 Information on electrostatic discharge (ESD) protection.

RISK OF DAMAGE

Damage to wires when disconnecting connectors and plug connections.

Sheared wires can cause a short circuit.

- Do not pull on the wires when disconnecting connectors and plug connections.

TECHNICAL INFORMATION

Follow instructions for removing and installing control units.

For additional information see: 12 00 ... Notes on removal and installation of control units

TECHNICAL INFORMATION

Disconnecting control units may cause fault code entries and functional limitations. Fault code entries must be read out and deleted if necessary.

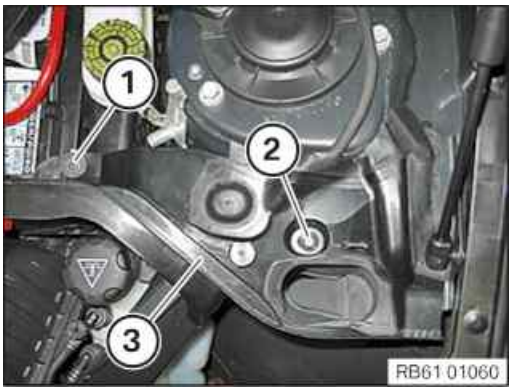

- Release the screw (1) and the expanding rivet (2).
- Remove the fixture for the gasket (3).

- Loosen screw (1).
- Place cover (2) of the positive battery connection point to one side.

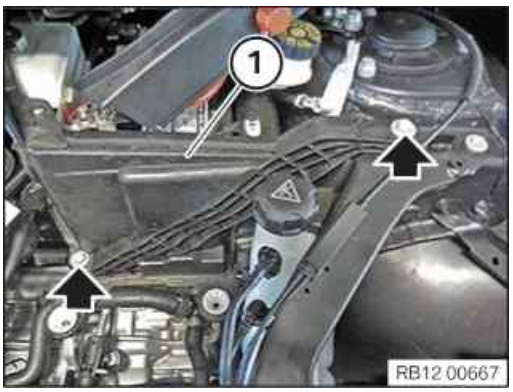

- Remove screws (arrows).
- Guide out tension strut (1) and remove.

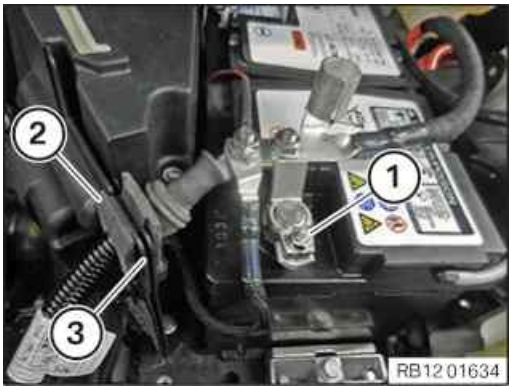

- Undo positive battery terminal (1).
- Feed out positive battery terminal (1) and set aside.
- Guide the positive battery cable (2) out of the holder (3) and lay to one side.

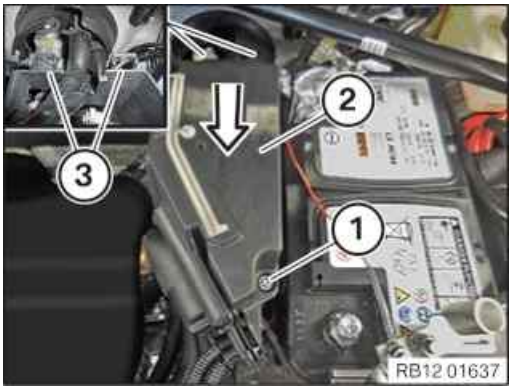

- Loosen screw (1).
- Unlock cover (2) and feed out and remove from the guides (3) in the direction of arrow.

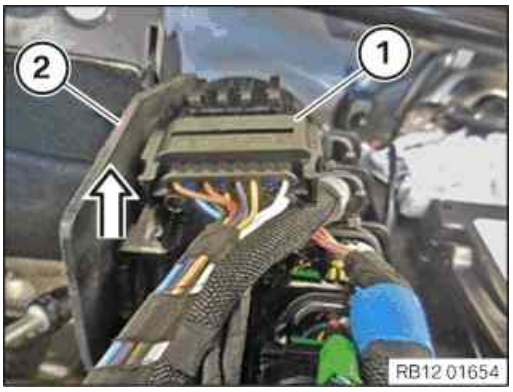

- Feed out connector (1) from the electronics box (2) and remove in the direction of arrow.
- Unlock and loosen connector (1).

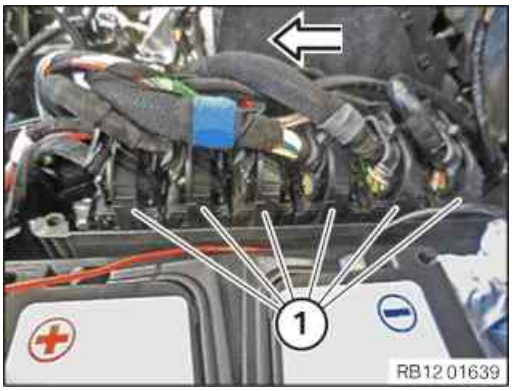

- Unlock and remove the connector (1) in the direction of the arrow.
- Feed out connector (1) and place to one side.

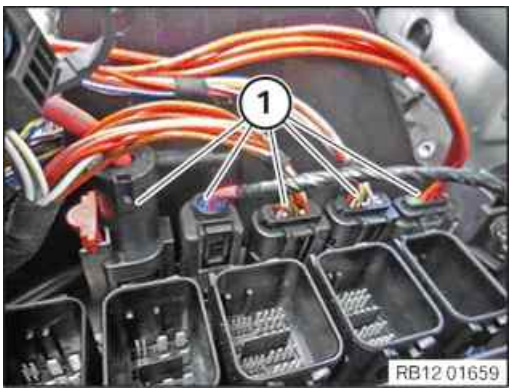

- Unlock and loosen connector (1).

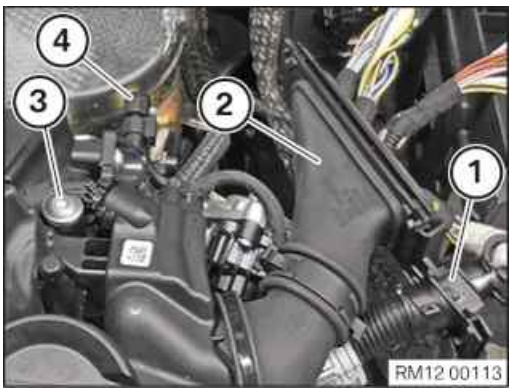

- Detach the wiring harness (1) from the electronics box.
- Detach the wiring harnesses (2) from electronics box.
- Loosen screw (3).
- Set wiring harnesses (1) and (2) aside.
- Unlock the connector (4) and disconnect it from the differential pressure sensor.

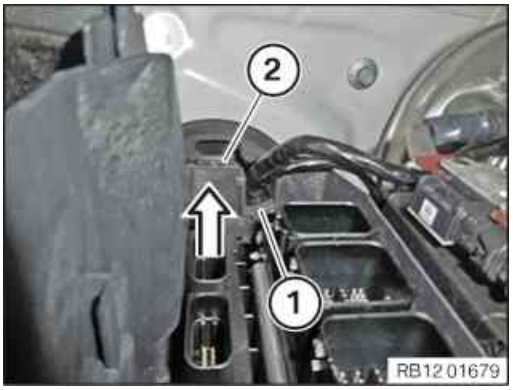

- Unlock and loosen holder (1).
- Guide the holder (1) out of the electronics box (2) in direction of arrow and set it aside.

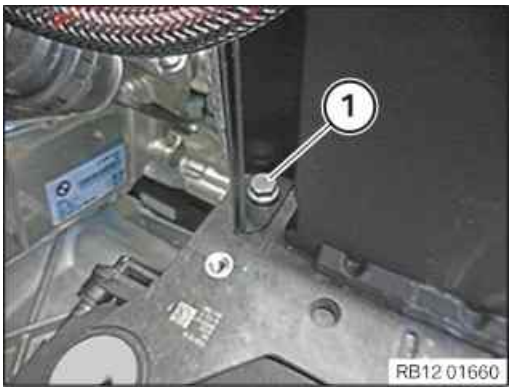

- Loosen screw (1).

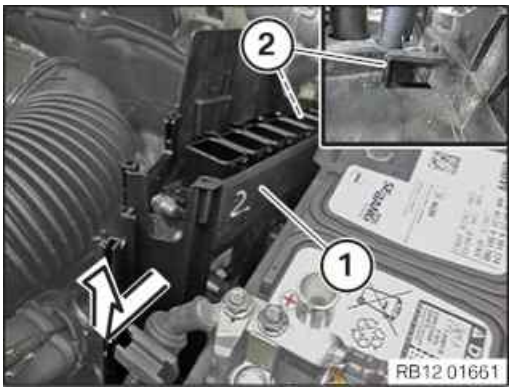

- Guide the electronics box (1) out of the guide (2) in direction of arrow and remove.

6 – Remove battery holder

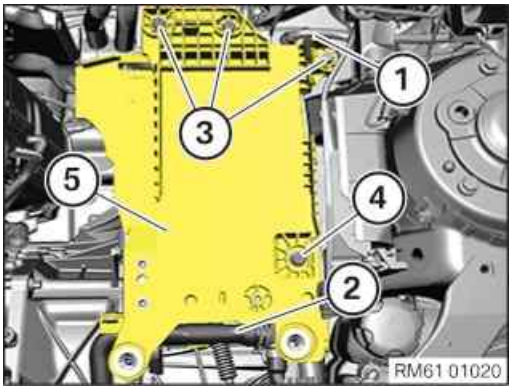

- Detach the cable clip (1) from the battery holder (5).
- Detach the coolant line (2) from the battery holder (5).
- Loosen screws (3).
- Loosen screw (4).
- Thread out and remove the battery holder (5).

7 – Removing the front underbody protection

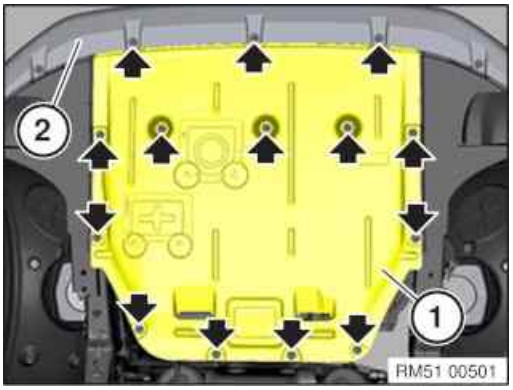

- Remove screws (arrows).
- Pull out and remove front underbody protection (1) under the bumper panel (2).

MAIN WORK

8 – Removing the nitrogen oxide sensor before SCR catalytic converter

WARNING

Hot surfaces.

Risk of burning!

- Perform all work only on components that have cooled down.

RISK OF DAMAGE

Electrostatic discharge.

Damage to or destruction of electrical components.

- Leave electrical components in original packaging until just before they are installed. Use the original packaging only for any return shipments. Always package removed components straight away.
- Read and comply with user information on using the associated special tool 12 7 060.
- Only touch the housings of electrical components. Do not touch pins or multi-pin connectors directly.
- Wear electrically conductive clothing and antistatic shoes (with ESD symbol).
- For additional information see: 61 35 Information on electrostatic discharge (ESD) protection.

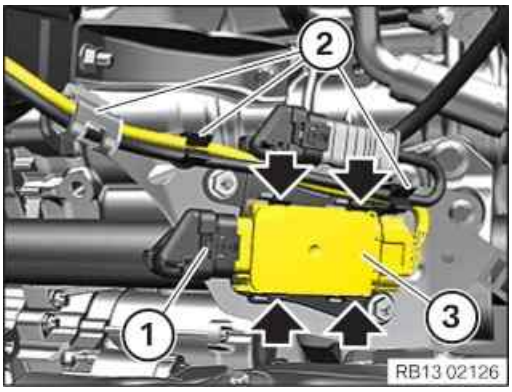

- Unlock plug connection (1) and disconnect.
- Slide the cable of the nitrogen oxide sensor evaluation electronics (3) out of the clamps (2) and remove.
- Unlock (arrows) and remove the evaluation electronics for the nitrogen oxide sensor (3).

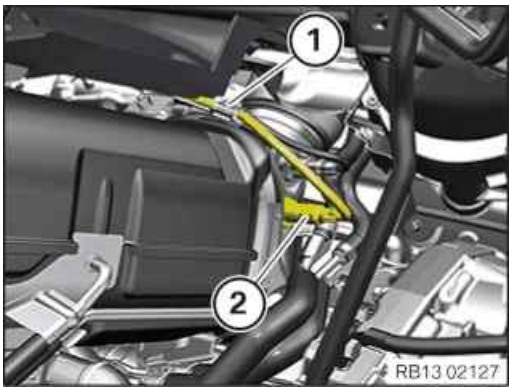

- Slide the cable of the nitrogen oxide sensor before the SCR catalytic converter (2) out of the clamps (1) and remove.
- Detach the nitrogen oxide sensor before the SCR catalytic converter (2) using the special tool **0 491 074 (11 7 020)**.
- Guide out and remove the nitrogen oxide sensor upstream of the SCR catalytic converter (2).

9 – Installing the nitrogen oxide sensor before SCR catalytic converter

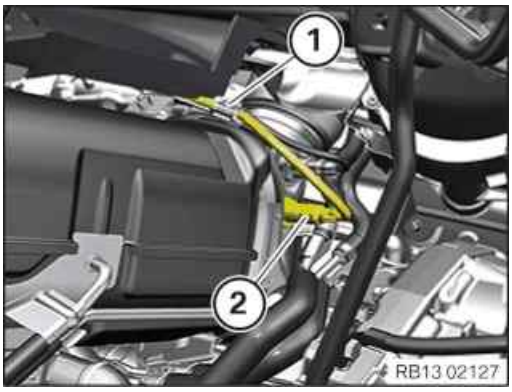

- Insert nitrogen oxide sensor before the SCR catalytic converter (2) and install.
- Tighten the nitrogen oxide sensor upstream of the SCR catalytic converter (2).

Nitrogen oxide sensor before SCR catalytic converter

Sensor		Tightening torque	50 Nm

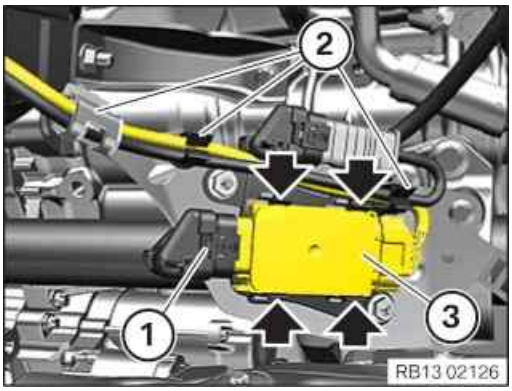

- Install and lock the evaluation electronics for the nitrogen oxide sensor (3) (arrows).
- Insert the evaluation electronics cable for the nitrogen oxide sensor (3) into the clamps (2) and install.
- Connect connectors (1) and lock.

  The connector (1) must engage audibly.

POSTPROCESSES

10 – Installing the front underbody protection

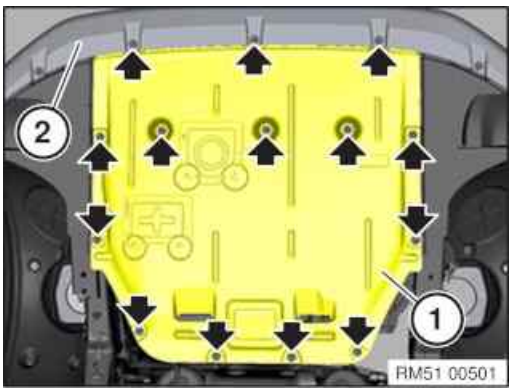

- Guide the front underbody protection (1) in under the bumper panel (2) and position it at the screw points.
- Tighten screws (arrows).

Underbody protection front

			3 Nm

11 – Install the battery holder

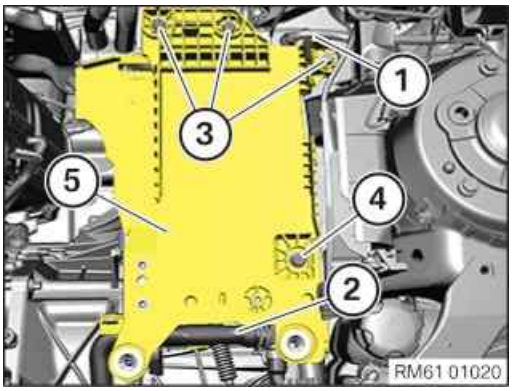

- Feed in and install the battery holder (5).
- Hand-tighten the bolt (4).
- Hand-tighten the bolts (3).
- Tighten down screw (4).

Battery holder to engine support

Hexagon screw M8x30		Tightening torque	19 Nm

- Tighten down screws (3).

Battery holder to engine support

Hexagon screw M8x30		Tightening torque	19 Nm

- Fasten the coolant line (2) on the battery holder (5).
- Fasten the cable clip (1) on the battery holder (5).

12 – Install electronics box

Prerequisite

Battery earth lead is disconnected.

RISK OF DAMAGE

Improper routing of cables and wiring harnesses.

Trapped, crushed or damaged cables may cause short circuits and malfunctions.

- Route all cables without abrasions, do not trap and crush.

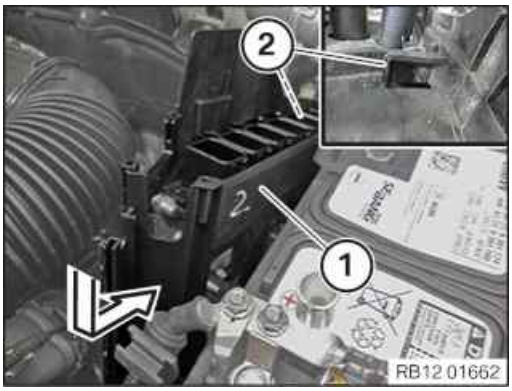

- Guide in and install the electronics box (1) into the guide (2) in direction of arrow.

- Make sure that the electronics box (1) is positioned correctly on the bulkhead (2).

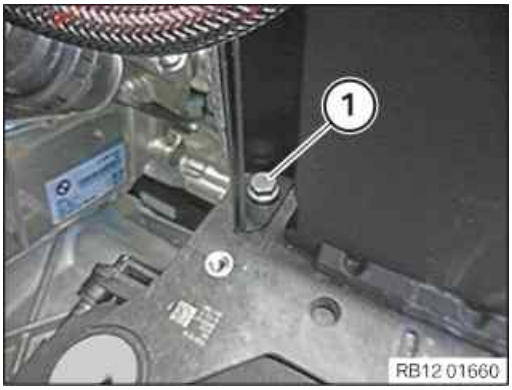

- Tighten down screw (1).

Electronics box to battery tray

M8X16		Tightening torque	15 Nm

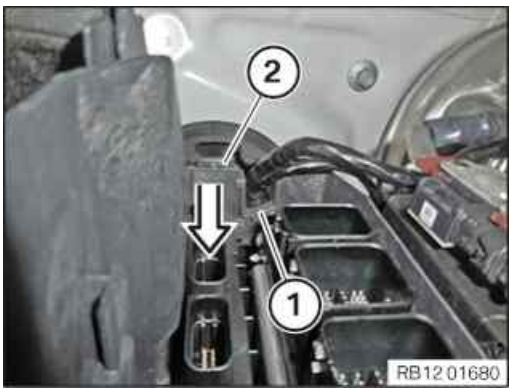

- Guide in and install the holder (1) in the electronics box (2) in direction of arrow.
- Make sure the bracket (1) engages audibly.

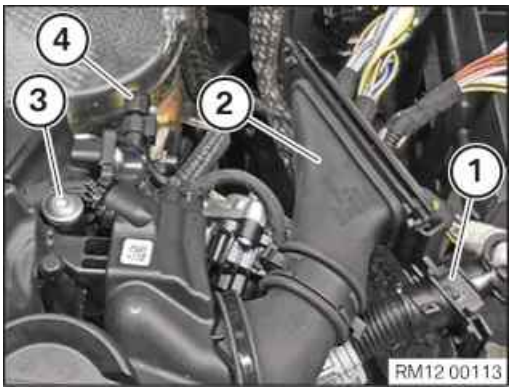

- Lay vehicle wiring harnesses (1) and (2) and mount on electronics box.
- Tighten down screw (3).

Wiring harness to cylinder head cover

TS5x20		Tightening torque	3,5 Nm

- Attach connector (4) to the differential pressure sensor and lock it audibly.

- Connect and lock the connector (1).
- Make sure the connectors (1) engage audibly.

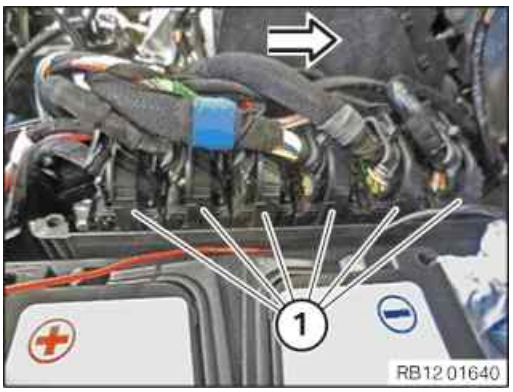

- Connect connector (1) in direction of arrow and lock.
- Make sure the connectors (1) engage audibly.

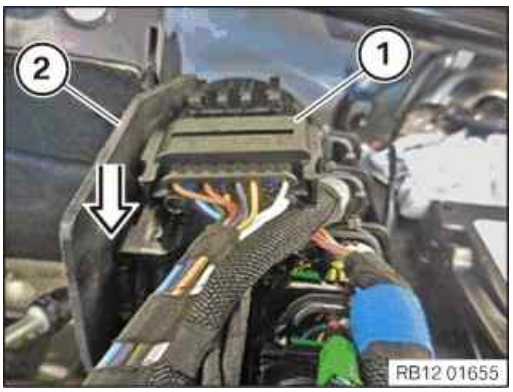

- Connect and lock the connector (1).
- Make sure the connector (1) engages audibly.
- Insert the connector (1) in the direction of arrow at the electronics box (2) and install.

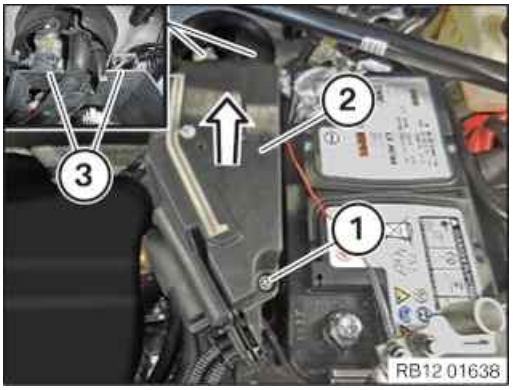

- Insert the cover (2) into the guides (3) in the direction of arrow and install.
- Make sure the cover audibly engages (2) in the guides (3).
- Tighten down screw (1).

Cover to electronics box

RF5x26.5		Tightening torque	2,5 Nm

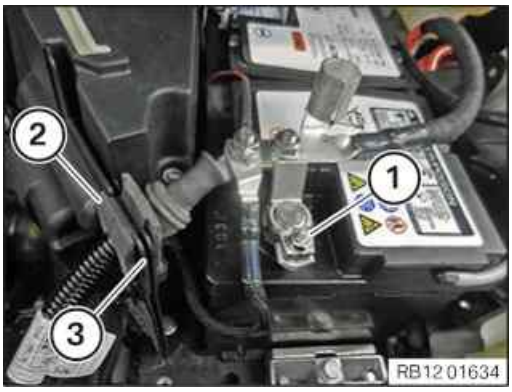

- Thread in positive battery cable (2) on holder (3) and install.
- Feed in and install positive battery terminal (1).
- Tighten positive battery terminal (1).

Positive battery terminal to battery

NutM6		Tightening torque	5 Nm

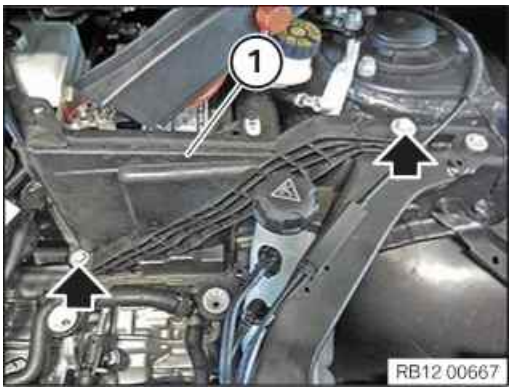

- Feed in and install tension strut (1).
- Tighten screws (arrows).

Tension strut to spring strut dome/battery tray

M8		Tightening torque	19 Nm

- Feed in and install cover (2) at the positive battery connection point.
- Tighten down screw (1).

Positive battery connection point cover to engine compartment partition wall

		Tightening torque	3 Nm

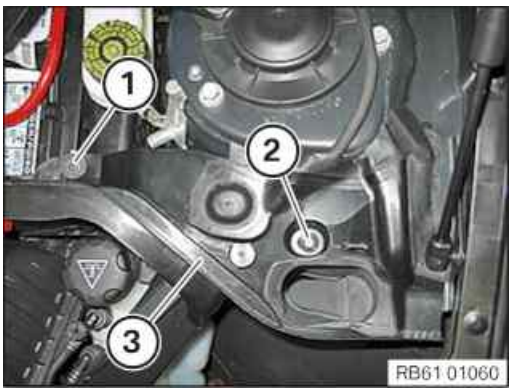

- Position the fixture for the gasket (3) and secure with the expanding rivet (2).
- Tighten down screw (1).

Battery cover

Screw			2,8 Nm

13 – Installing the upper bulkhead cover

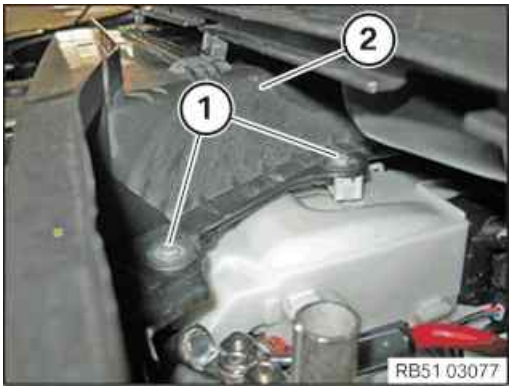

- Feed in and install cover (2) of the bulkhead at the top.
- Tighten the screws (1).

Bulkhead cover, top

Screw		Tightening torque	3 Nm

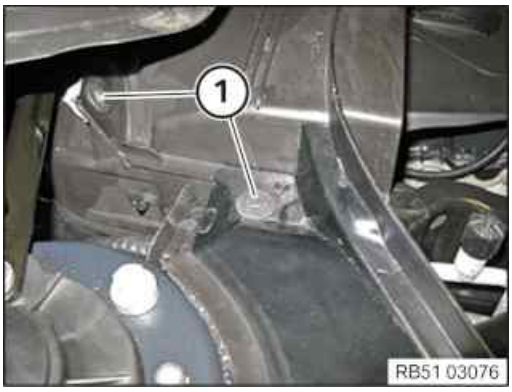

- Tighten the screws (1).

Bulkhead cover, top

Screw		Tightening torque	3 Nm

- Tighten the screws (1).

Bulkhead cover, top

Screw		Tightening torque	3 Nm

14 – Install vehicle battery

TECHNICAL INFORMATION

For additional information see:
61 00 ... Safety information on handling the vehicle battery
61 00 / 12 00 ... Notes on disconnecting and connecting the vehicle battery
61 12 ... Notes on the intelligent battery sensor (IBS)

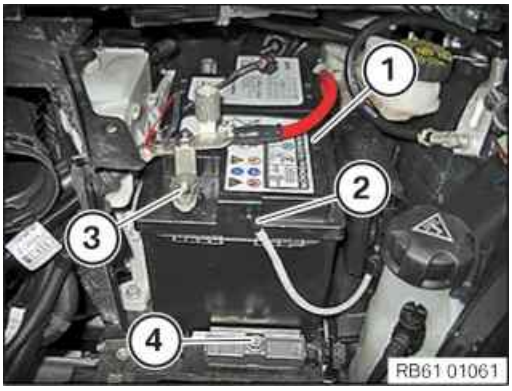

- Install vehicle battery (1).
- Tighten the holder with the bolt (4).

Battery terminal rail to battery tray

M8 screw		19 Nm

- Position the vent hose (2).
- Position the positive terminal.
- Tighten the nut (3) on the positive terminal.

Positive battery terminal

NutM6		5 Nm

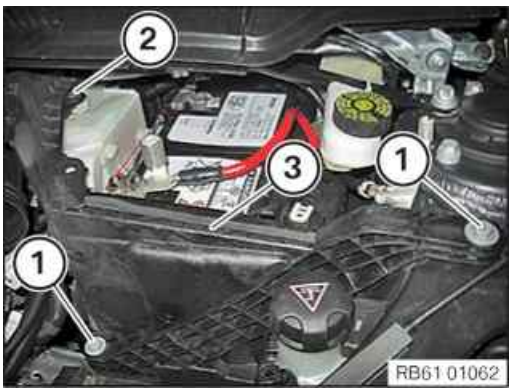

- Insert the tension strut (3).
- Tighten down screw (2).

Battery cover

Screw		2,8 Nm

- Tighten the screws (1).

Trailing link

M8 screw		19 Nm

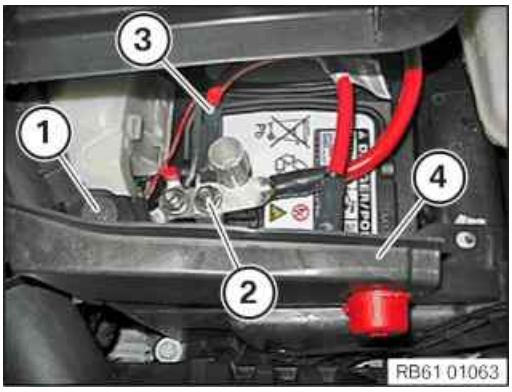

- Position the positive battery cable (3) with the cover of the remote positive terminal (4).
- Tighten down screw (1).

Battery cover

Screw		2,8 Nm

- Tighten the nut (2) on the positive terminal.

Positive battery cable to battery terminal

Nut M8		15,2 Nm

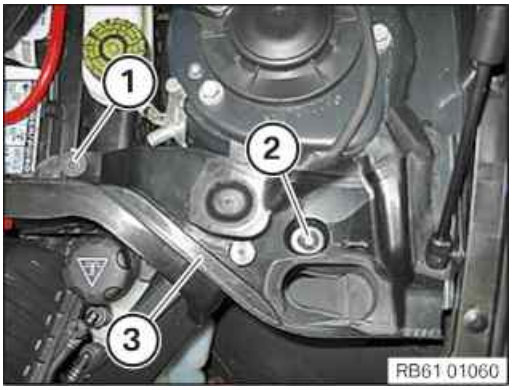

- Position the fixture for the gasket (3) and secure with the expanding rivet (2).
- Tighten down screw (1).

Battery cover

Screw		2,8 Nm

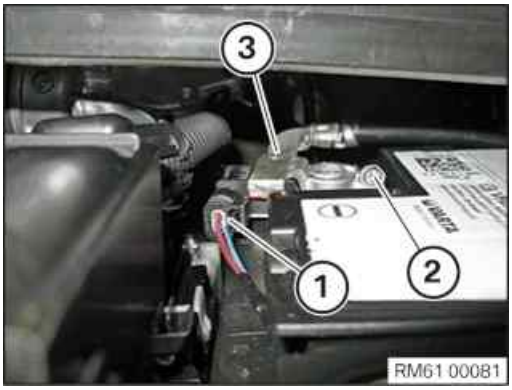

- Position the negative battery terminal (3).
- Tighten nut (2).

Negative battery terminal (with IBS)

NutM6		5 Nm

- Connect connectors (1) and lock.

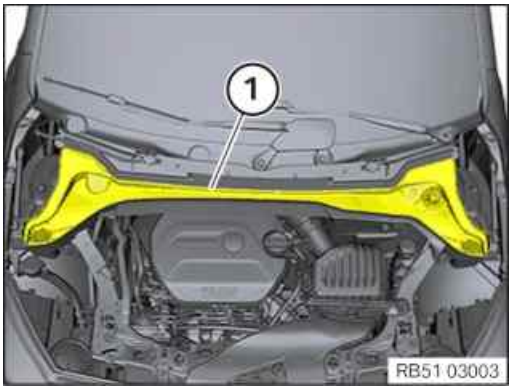

- Feed in the cowl panel cover (1).

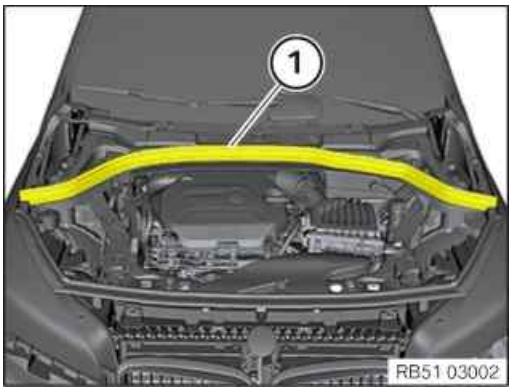

- Press the gasket (1) in a downwards direction.

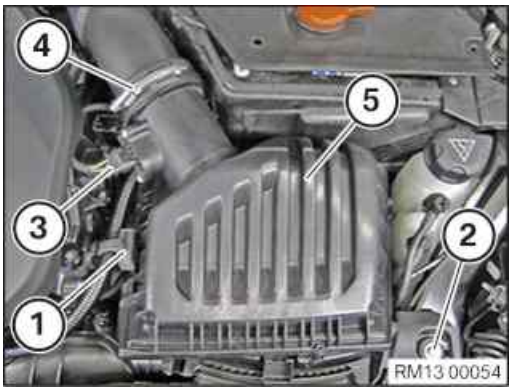

- Insert the intake silencer housing (5) into the rubber mounts and install it.

  Intake filter housing (5) must engage audibly.
- Tighten down screw (2).

Intake silencer housing to lock bridge

M6X30		Tightening torque	8 Nm

- Tighten clamp (4).

Clean air pipe to intake silencer housing

Clamp		Tightening torque	3 Nm

- Connect and lock the connector (3).

  The connector (3) must engage audibly.
- Insert and install the holder (1).

16 – Install the intake neck for the intake filter housing

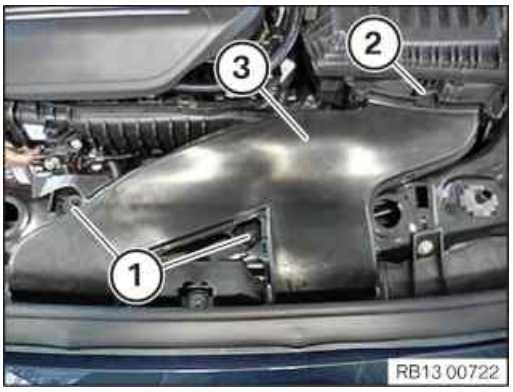

- Insert and install the intake neck (3).

  The lock (2) must audibly engage.
- Tighten nuts (1).

Intake neck to cross connection

M6		Tightening torque	8 Nm

17 – Reset the adaptations and adjustments of the SCR system

- Connect diagnosis system:
  - Service functions
  - Power train
  - Digital Diesel Electronics
  - SCR system
  - SCR system adjustments and adaptations

Additional Information

Overview of Tightening Torques

Nitrogen oxide sensor before SCR catalytic converter — Used in step 9

Sensor		Tightening torque	50 Nm

Underbody protection front — Used in step 10

			3 Nm

Battery holder to engine support — Used in step 11

Hexagon screw M8x30		Tightening torque	19 Nm

Electronics box to battery tray — Used in step 12

M8X16		Tightening torque	15 Nm

Wiring harness to cylinder head cover			Used in step 12
TS5x20		Tightening torque	3,5 Nm

Cover to electronics box			Used in step 12
RF5x26.5		Tightening torque	2,5 Nm

Positive battery terminal to battery			Used in step 12
NutM6		Tightening torque	5 Nm

Tension strut to spring strut dome/battery tray			Used in step 12
M8		Tightening torque	19 Nm

Positive battery connection point cover to engine compartment partition wall			Used in step 12
		Tightening torque	3 Nm

Battery cover			Used in step 12 14
Screw			2,8 Nm

Bulkhead cover, top			Used in step 13
Screw		Tightening torque	3 Nm

Battery terminal rail to battery tray			Used in step 14
M8 screw			19 Nm

Positive battery terminal			Used in step 14
NutM6			5 Nm

Trailing link			Used in step 14
M8 screw			19 Nm

Positive battery cable to battery terminal			Used in step 14
Nut M8			15,2 Nm

Negative battery terminal (with IBS)			Used in step 14
NutM6			5 Nm

Intake silencer housing to lock bridge			Used in step 15
M6X30		Tightening torque	8 Nm

Clean air pipe to intake silencer housing			Used in step 15
Clamp		Tightening torque	3 Nm

Intake neck to cross connection			Used in step 16
M6		Tightening torque	8 Nm

Overview of Special Tools

0 491 074 (11 7 020) Socket wrench insert

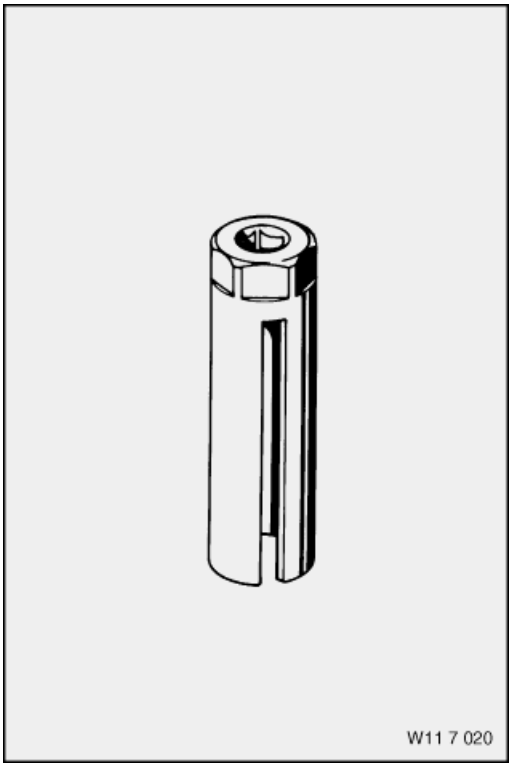

Common	Used in step 8
Usage	(Socket wrench insert 22 mm) For loosening and tightening the oxygen sensor
Included in the tool or work	
Storage location	A9
Replaced by	
In connection with	
SI-Number	

Links

General repair instructions	Used in step
61 20 ... Notes on AGM battery	3 14
61 12 ... Notes on intelligent battery sensor (IBS)	3 14
61 00 ... Notes for disconnecting and connecting battery	3 14
61 00 ... Safety information for handling vehicle battery	
61 20 ... Battery replacement information	

Repair instructions	Used in step
61 35 ... Notes on ESD protection (Electro Static Discharge)	5 8

13 62 622 Replace nitrogen oxide sensor downstream of SCR catalytic converter

PRELIMINARY WORK

1 – If installed: Removing rear underbody protection

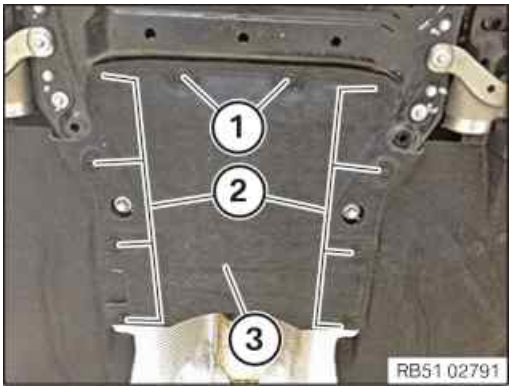

- Loosen screws (1) and (2).
- Remove underbody protection (3).

2 – Removing right underbody panelling

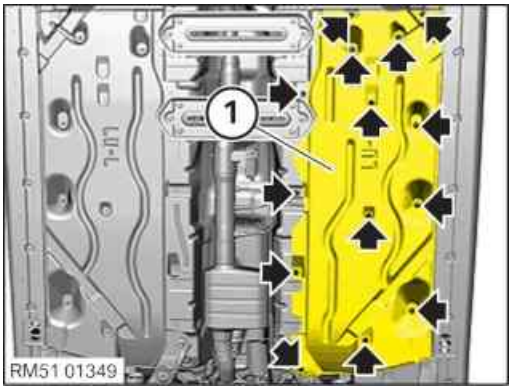

- Unscrew all bolts and nuts (arrows).
- Remove the underbody panelling (1).

MAIN WORK

3 – Removing the nitrogen oxide sensor after the SCR catalytic converter

WARNING

Hot surfaces.

Risk of burning!

- Perform all work only on components that have cooled down.

RISK OF DAMAGE

Electrostatic discharge.

Damage to or destruction of electrical components.

- Leave electrical components in original packaging until just before they are installed. Use the original packaging only for any return shipments. Always package removed components straight away.
- Read and comply with user information on using the associated special tool 12 7 060.
- Only touch the housings of electrical components. Do not touch pins or multi-pin connectors directly.
- Wear electrically conductive clothing and antistatic shoes (with ESD symbol).
- For additional information see: 61 35 Information on electrostatic discharge (ESD) protection.

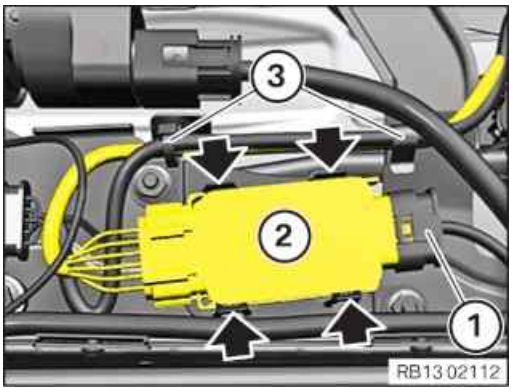

- Unlock plug connection (1) and disconnect.
- Disconnect the evaluation electronics (2) for the nitrogen oxide sensor (arrows).
- Feed out and remove cable of the evaluation electronics (2) for the nitrogen oxide sensor from the clamps (3).

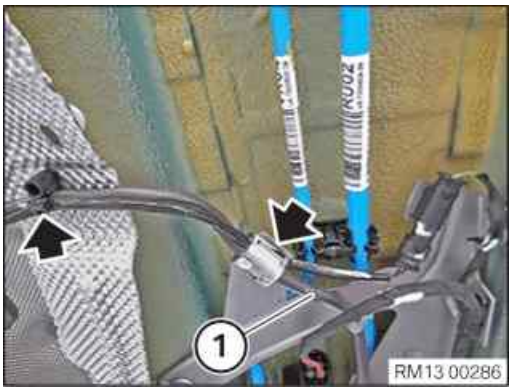

- Guide the nitrogen oxide sensor cable (1) out of the clamps (arrows) and remove it.

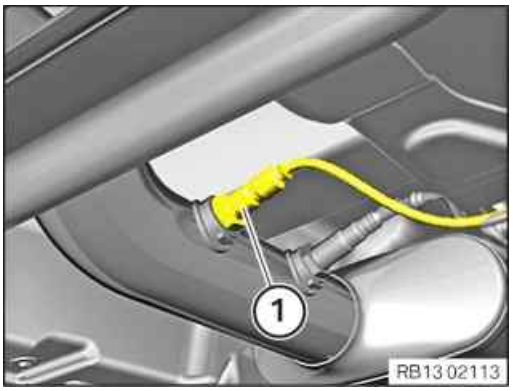

- Loosen, feed out and remove the nitrogen oxide sensor (1).

4 – Install the nitrogen oxide sensor after the SCR catalytic converter

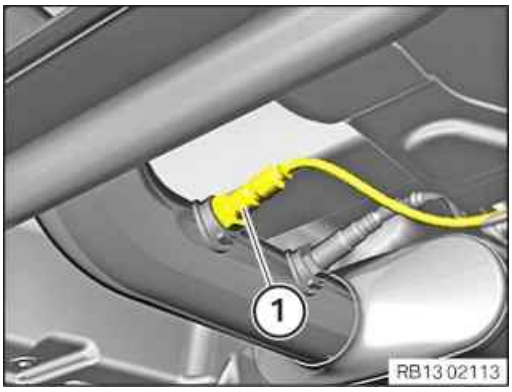

- Insert and install the nitrogen oxide sensor (1) and tighten it with the special tool **0 491 075 (11 7 030)**.

Nitrogen oxide sensor downstream of SCR catalytic converter

Sensor		Tightening torque	50 Nm

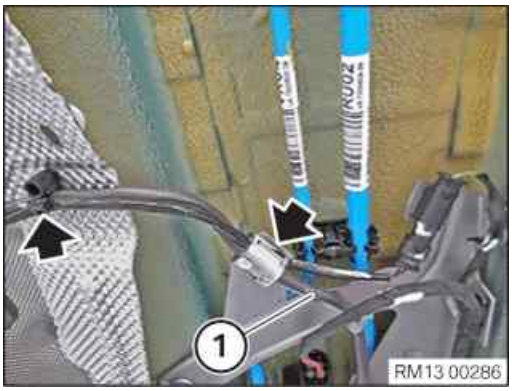

- Insert cable (1) of the nitrogen oxide sensor on the clamps (arrows) and install.

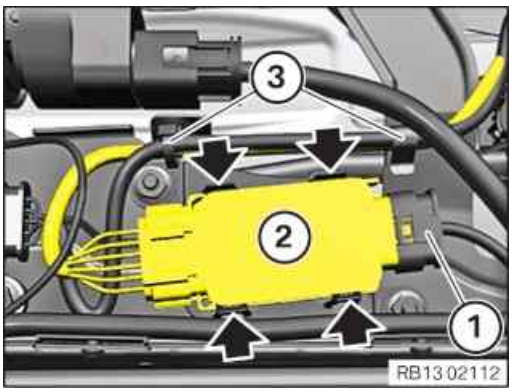

- Attach the evaluation electronics (2) for the nitrogen oxide sensor (arrows).
- Connect connectors (1) and lock.

  The connector (1) must engage audibly.
- Feed in the cable from the evaluation electronics (2) for the nitrogen oxide sensor on the clamps (3) and fasten.

5 – Reset the adaptations and adjustments of the SCR system

- Connect diagnosis system:
  - Service functions
  - Power train
  - Digital Diesel Electronics
  - SCR system
  - SCR system adjustments and adaptations

6 – Installing underbody panelling , right

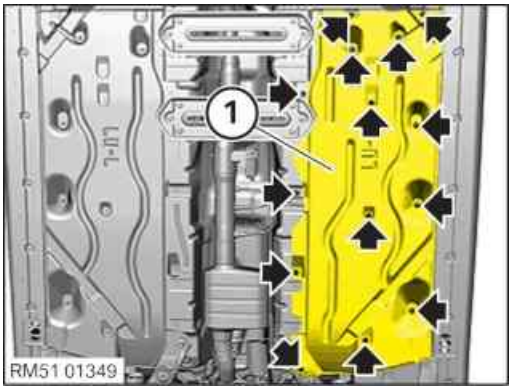

- Correctly position the underbody panelling (1).
- Tighten all bolts and nuts (arrows).

Underbody panelling, side

Hexagon screw		Tightening torque	2,6 Nm

Underbody panelling, side

Plastic nut		Tightening torque	2,6 Nm

7 – If installed: Installing underbody protection at rear

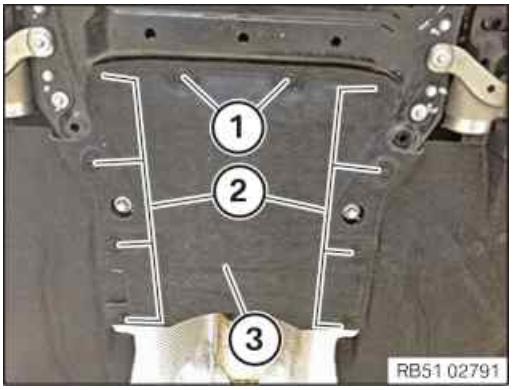

- Install the underbody protection (3).
- Tighten down screws (1) and (2).

Underbody protection to body

Screw		Tightening torque	3 Nm

Additional Information

Overview of Tightening Torques

Nitrogen oxide sensor downstream of SCR catalytic converter Used in step 4

Sensor		Tightening torque	50 Nm

Underbody panelling, side Used in step 6

Hexagon screw		Tightening torque	2,6 Nm

Underbody panelling, side Used in step 6

Plastic nut		Tightening torque	2,6 Nm

Underbody protection to body Used in step 7

Screw		Tightening torque	3 Nm

Overview of Special Tools

0 491 075 (11 7 030) Socket wrench insert

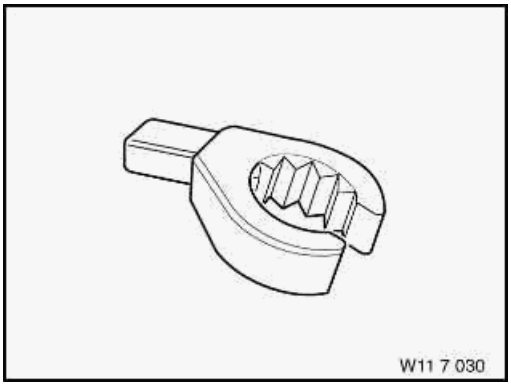

Common	Used in step 4
Usage	(Socket wrench insert 22 mm) For loosening and tightening the oxygen sensor
Included in the tool or work	
Storage location	A9
Replaced by	
In connection with	
SI-Number	01 06 95 (963)

Links

Repair instructions	Used in step
61 35 ... Notes on ESD protection (Electro Static Discharge)	3

13 62 651 Replace the front oxygen sensor

WARNING

Hot surfaces.

Risk of burning!

- Perform all work only on components that have cooled down.

PRELIMINARY WORK

1 – Remove the seal for the rear bonnet

NOTICE

Schematic diagram is for example purposes. Some parts may differ in certain details.

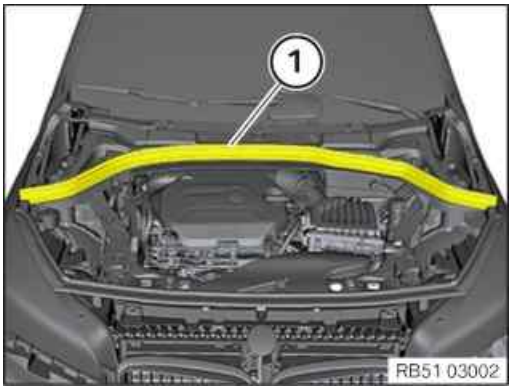

- Pull off rear bonnet seal (1) towards the top and remove.

2 – Removing front cowl panel cover

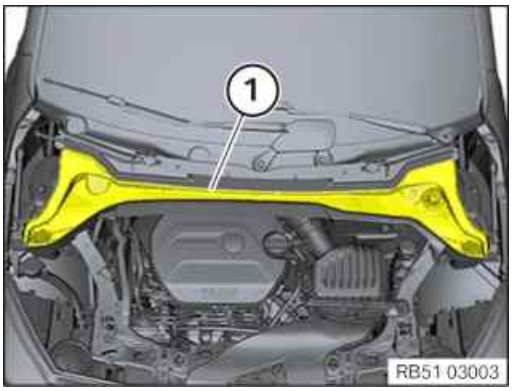

- Guide the front cowl panel cover (1) out toward the top and remove it.

3 – Remove left and right wiper arm

NOTICE

Description is for left component only. Procedure on the right side is identical.

▶ **Remove the wiper arm**

RISK OF DAMAGE

Damage to wiper console

While removing the wiper arms without using special tool, the wiper console can break.

- Removing the wiper arms must be carried out only using the prescribed special tool.
- Do not lift off wiper arm, else the wiper console may break on the predetermined breaking point for the pedestrian protection.

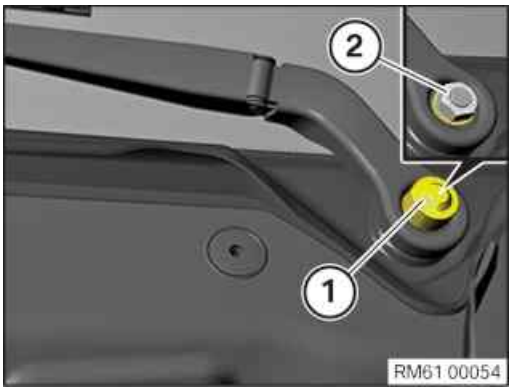

- Remove the protective cap (1).
- Loosen nut (2).

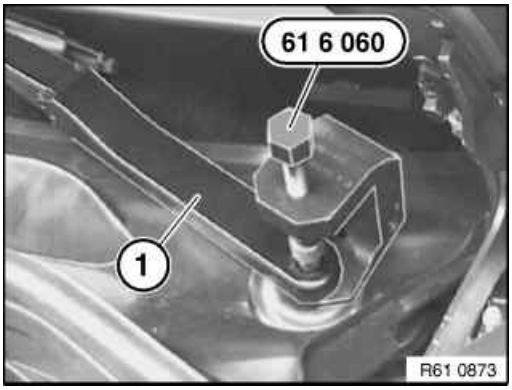

- Pull off the wiper arm (1) using special tool .

4 – Remove the gutter strip on the windscreen on the left and right

NOTICE

Description is for left component only. Procedure on the right side is identical.

▶ **Remove the gutter strip on the windscreen**

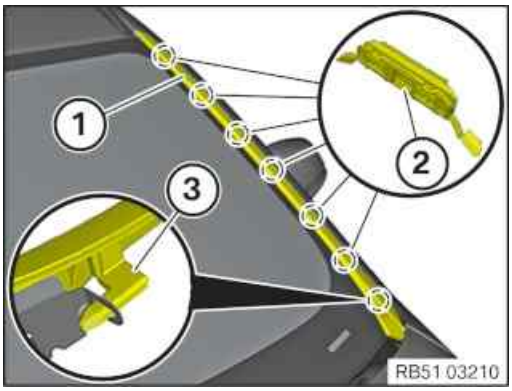

- Unclip the gutter strip (1) from the clips (2) beginning at the roof to the top.
- Feed the gutter strip (1) out of the guide (3).

5 – Remove the rear cowl panel cover

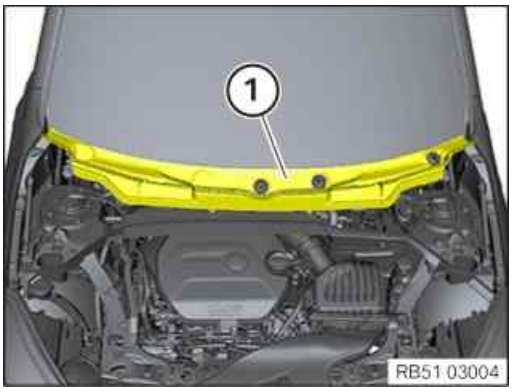

- Disengage and guide out the rear cowl panel cover (1) towards the top.

6 – Removing the upper bulkhead cover

- Loosen screws (1).

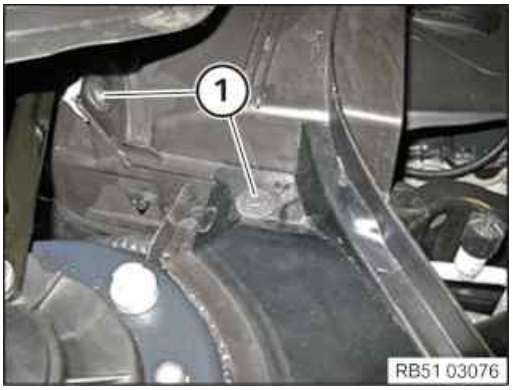

- Loosen screws (1).

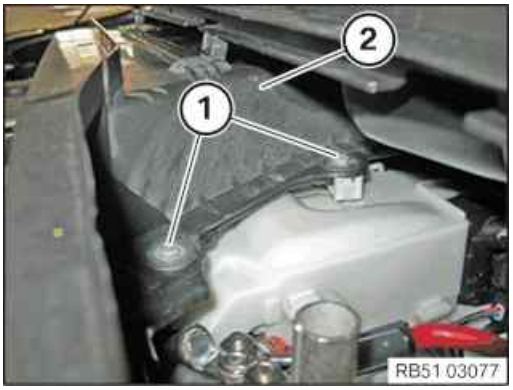

- Loosen screws (1).
- Feed out and remove the upper bulkhead cover (2).

7 – Removing the acoustic cover

WARNING

Hot surfaces.

Risk of burning!

- Perform all work only on components that have cooled down.

RISK OF DAMAGE

Damage to the acoustic cover.

Jerky movements during disassembly and excessive application of force during installation may result in breakage of the acoustic cover.

- Disassemble or mount the acoustic cover carefully.
- Disassemble or mount snap-lock couplings of the ball pivots one after the other.
- Disassemble or mount acoustic cover only at temperatures >20 °C.
- Use only distilled water as an auxiliary material during installation, no lubricants.

- Unclip the acoustic cover from the marked areas towards the top.

8 – Remove resonator

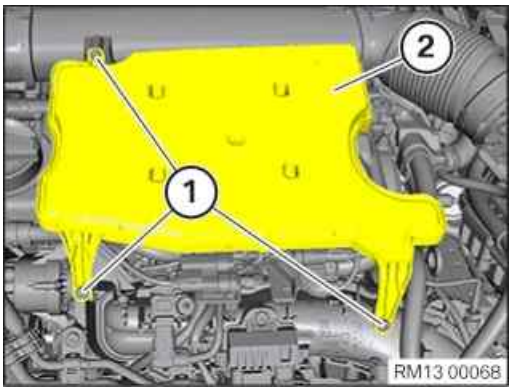

- Loosen screws (1).
- Guide out and remove the resonator (2).

9 – Removing the front underbody protection

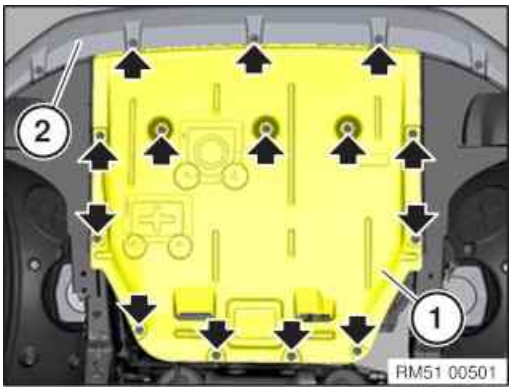

- Remove screws (arrows).
- Pull out and remove front underbody protection (1) under the bumper panel (2).

10 – Partially detach the clean air pipe

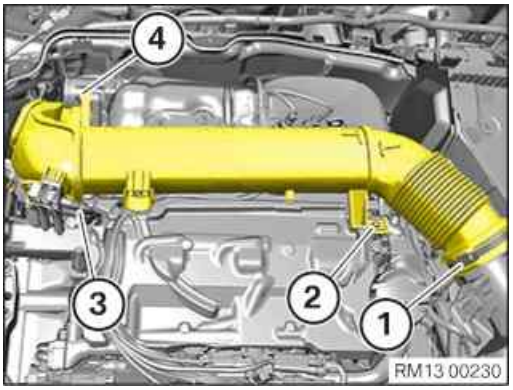

- Release the screw clamp (1).
- Loosen screw (2).
- Unlock and loosen connector (3).
- Loosen screw (4).

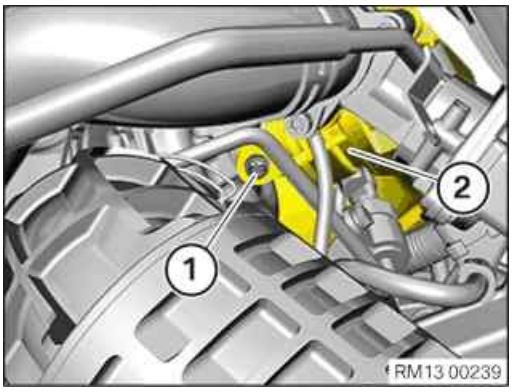

- Unscrew the screw (1) from the clean air pipe (2).

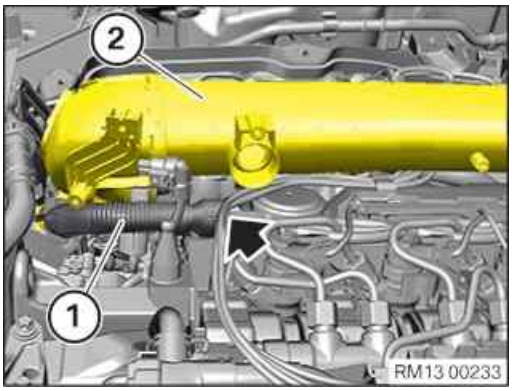

- Detach ventilation line (1) from clean air pipe (2) and set it aside.
- Detach ventilation line (1) from cylinder head cover (arrow).
- Remove the ventilation line (1).

- Thread out the clean air pipe (1) and set it aside as shown.

MAIN WORK

11 – Remove the control sensor

WARNING

Hot surfaces.

Risk of burning!

- Perform all work only on components that have cooled down.

RISK OF DAMAGE

Electrostatic discharge.

Damage to or destruction of electrical components.

- Leave electrical components in original packaging until just before they are installed. Use the original packaging only for any return shipments. Always package removed components straight away.
- Read and comply with user information on using the associated special tool 12 7 060.
- Only touch the housings of electrical components. Do not touch pins or multi-pin connectors directly.
- Wear electrically conductive clothing and antistatic shoes (with ESD symbol).
- For additional information see: 61 35 Information on electrostatic discharge (ESD) protection.

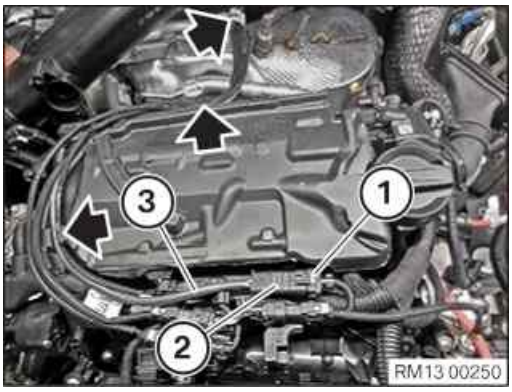

- Unlock and disconnect the plug connection (1).
- Detach the connector (2) from the holder .
- Feed out and remove cable (3) out of the oxygen control sensor from the clamps (arrows).

- Release the front oxygen control sensor (1) using special tool **0 491 075 (11 7 030)**.
- Feed out and remove the control sensor (1).

12 – Install the control sensor

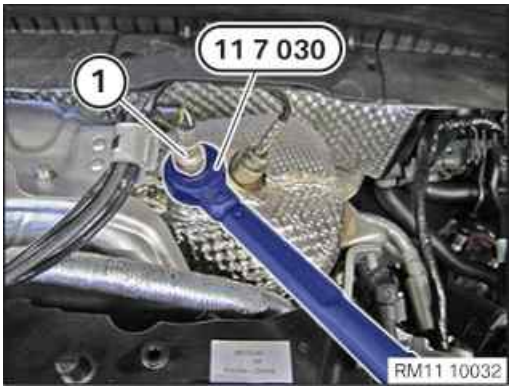

- Feed in front oxygen sensor (1) and install.
- Tighten the front oxygen sensor (1) with the special tool **0 491 075 (11 7 030)**.

Control sensor

Control sensor		Tightening torque	50 Nm

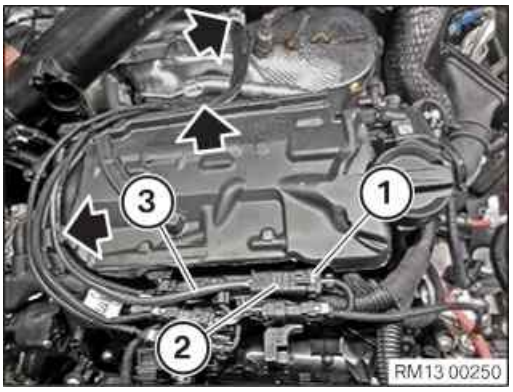

- Feed in and install cable (3) from the oxygen control sensor into the clamps (arrows).
- Secure connector (2) on holder.
- Connect and lock the connector (1).

  The connector (1) must engage audibly.

POSTPROCESSES

13 – Partially securing clean air pipe

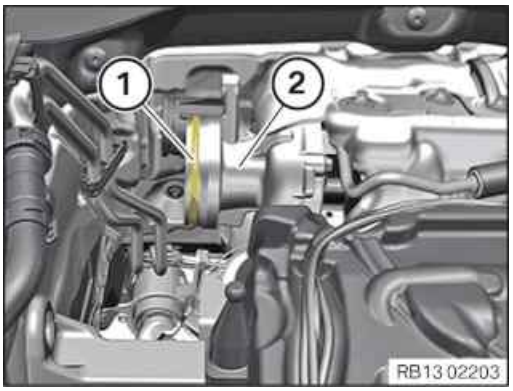

- Check the sealing ring (1) of the exhaust turbocharger (2) for damage and renew it if necessary.

- Feed in clean air pipe (1) and install.

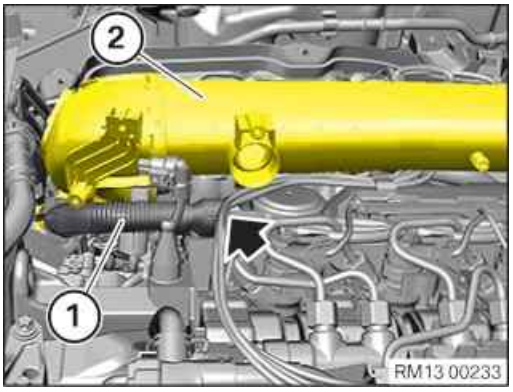

- Feed in ventilation line (1) at clean air pipe (2) and install.
- Feed in ventilation line (1) at cylinder head cover (arrow) and install.

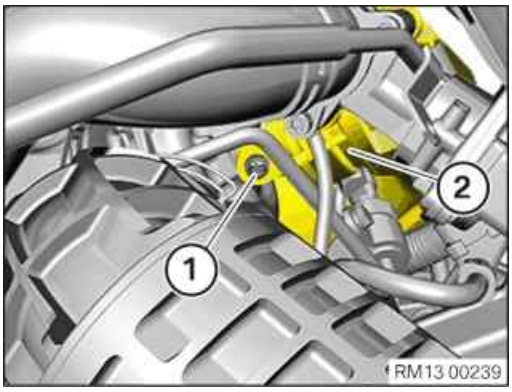

- Tighten screw (1) from clean air pipe (2).

Clean air pipe to exhaust turbocharger

Torx bolt BM8x25		Tightening torque	8 Nm

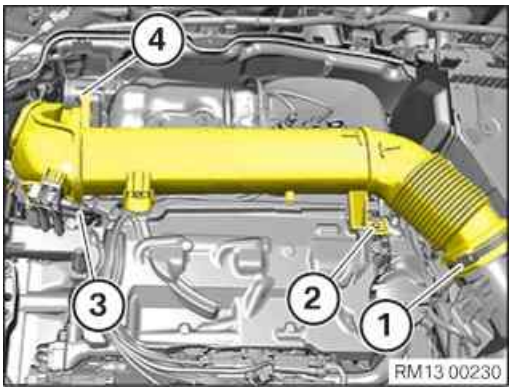

- Tighten down screw (4).

Clean air pipe to exhaust turbocharger

Torx bolt BM8x25		Tightening torque	8 Nm

- Connect and lock the connector (3).

  The connector (3) must engage audibly.
- Renew the screw (2).

  Parts: Screw
- Tighten down screw (2).

Clean air pipe to cylinder head cover

Oval-head screw	Renew screw.	Tightening torque	8 Nm

- Tighten the screw clamp (1).

Clean air pipe to intake silencer housing

Clamp		Tightening torque	3 Nm

14 – Installing the front underbody protection

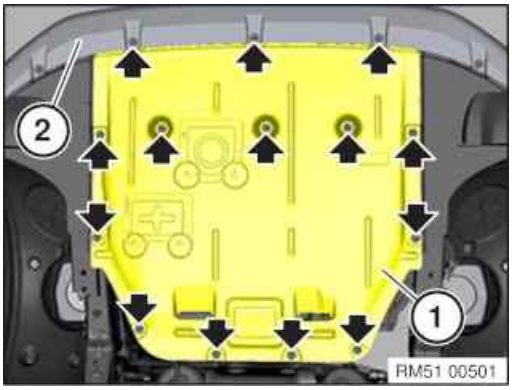

- Guide the front underbody protection (1) in under the bumper panel (2) and position it at the screw points.
- Tighten screws (arrows).

Underbody protection front

			3 Nm

15 – Install resonator

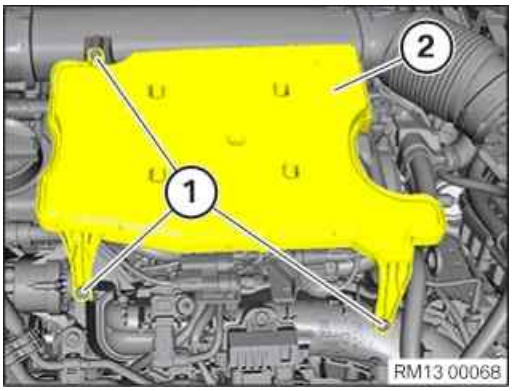

- Insert and install the resonator (2).
- Renew screws (1).

  Parts: Bolts
- Tighten the screws (1).

Resonator to manifold and clean air pipe

Screw TS6	Renew screw.	Tightening torque	5 Nm

16 – Install acoustic cover

RISK OF DAMAGE

Damage to the acoustic cover.

Jerky movements during disassembly and excessive application of force during installation may result in breakage of the acoustic cover.

- Disassemble or mount the acoustic cover carefully.
- Disassemble or mount snap-lock couplings of the ball pivots one after the other.
- Disassemble or mount acoustic cover only at temperatures >20 °C.
- Use only distilled water as an auxiliary material during installation, no lubricants.

- Check for correct installation of all rubber mounts in the acoustic cover (1).

- Clip in the acoustic cover into the holders in the indicated areas.
- Make sure that the acoustic cover engages audibly.

17 – Installing the upper bulkhead cover

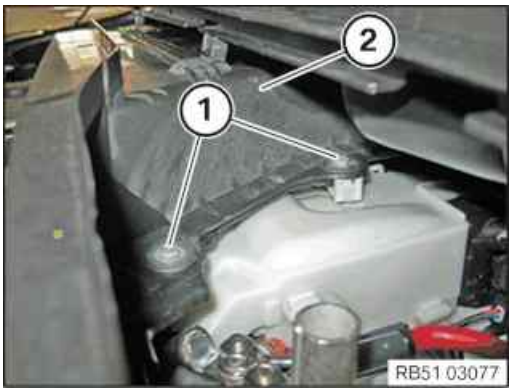

- Feed in and install cover (2) of the bulkhead at the top.
- Tighten the screws (1).

Bulkhead cover, top

Screw		Tightening torque	3 Nm

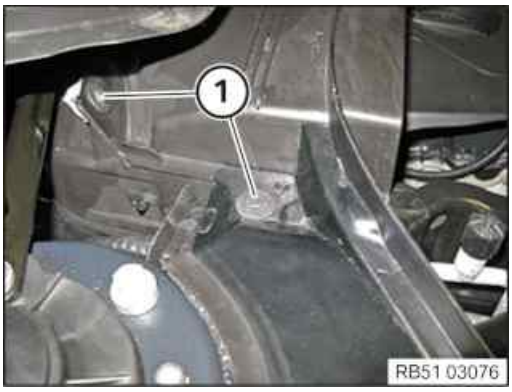

- Tighten the screws (1).

Bulkhead cover, top

Screw		Tightening torque	3 Nm

- Tighten the screws (1).

Bulkhead cover, top

Screw		Tightening torque	3 Nm

18 – Install the rear cowl panel cover

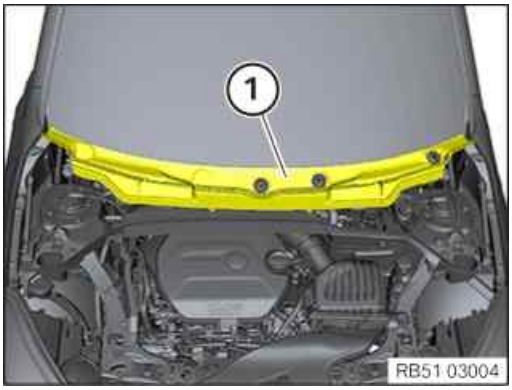

- Feed in and engage the rear cowl panel cover (1).

19 – Install the gutter strip on the windscreen on the left and right

NOTICE

Description is for left component only. Procedure on the right side is identical.

▸ **Install the gutter strip on the windscreen**

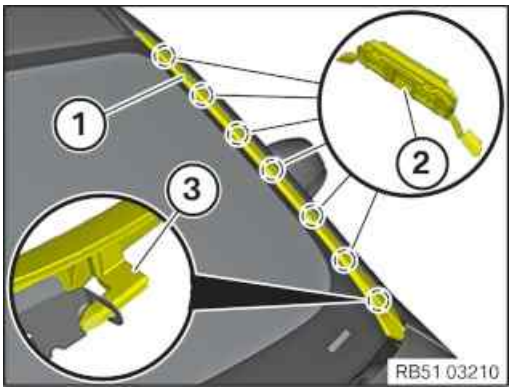

- Check the clamps (2) for damage and renew if necessary.
- Insert the gutter strip (1) with the guide (3).
- Align the gutter strip (1) at the roof and clip it in.

20 – Install left and right wiper arm

NOTICE

Description is for left component only. Procedure on the right side is identical.

▶ **Install the wiper arm**

TECHNICAL INFORMATION

The wiper system must be in zero position.
After installing the cowl panel cover and before fitting the wiper arm:
Activate the wiper system once to ensure that it has the correct installation position.

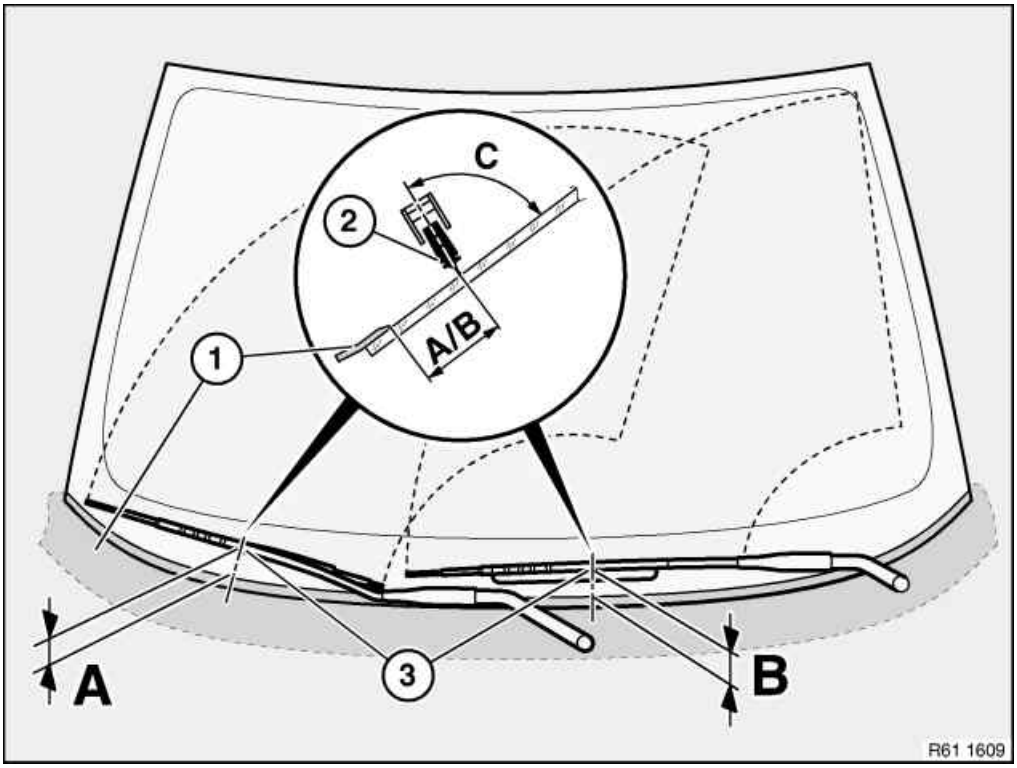

- Connect the wiper arm (3).
- Correctly position the wiper arm (2) in relation to the window edge (1).

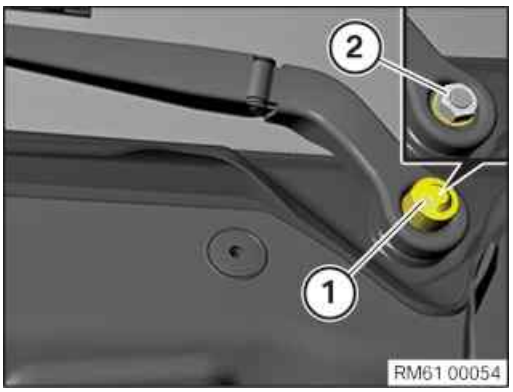

NOTICE

Description is for left component only. Procedure on the right side is identical.

- Tighten nut (2).

Windscreen wiper arm

Combination hexagon nut		Tightening torque	35 Nm

- Connect the protective cap (1).

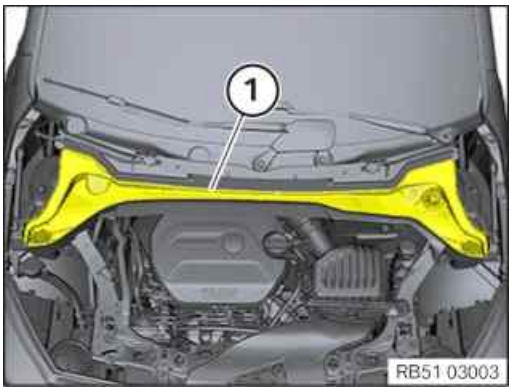

- Insert the cowl panel cover front (1) to the rear and install.
- Check cowl panel cover at front is correctly seated (1).

22 – Install the seal for the bonnet

NOTICE

Schematic diagram is for example purposes. Some parts may differ in certain details.

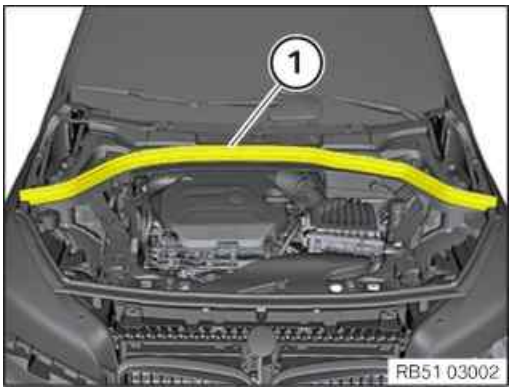

- Install bonnet seal at rear (1).
- Ensure that the rear bonnet seal (1) is fitted correctly.

Additional Information

Overview of Tightening Torques

Control sensor			Used in step 12
Control sensor		Tightening torque	50 Nm

Clean air pipe to exhaust turbocharger			Used in step 13
Torx bolt BM8x25		Tightening torque	8 Nm

Clean air pipe to cylinder head cover			Used in step 13
Oval-head screw	Renew screw.	Tightening torque	8 Nm

Clean air pipe to intake silencer housing			Used in step 13
Clamp		Tightening torque	3 Nm

Underbody protection front			Used in step 14
			3 Nm

Resonator to manifold and clean air pipe			Used in step 15
Screw TS6	Renew screw.	Tightening torque	5 Nm

Bulkhead cover, top			Used in step 17
Screw		Tightening torque	3 Nm

Windscreen wiper arm			Used in step 20
Combination hexagon nut		Tightening torque	35 Nm

Overview of Special Tools

0 491 075 (11 7 030) Socket wrench insert

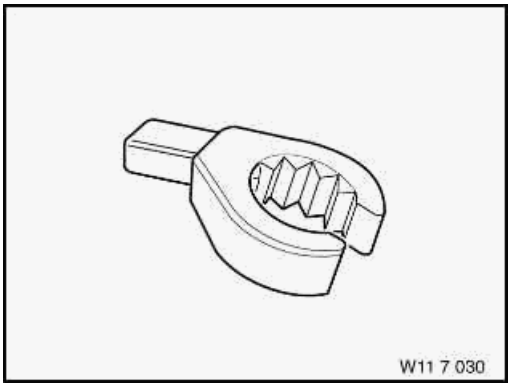

Common		Used in step 11 12
Usage	(Socket wrench insert 22 mm) For loosening and tightening the oxygen sensor	
Included in the tool or work		
Storage location	A9	
Replaced by		
In connection with		
SI-Number	01 06 95 (963)	

Overview Technical Data

Links

Repair instructions	Used in step
61 35 ... Notes on ESD protection (Electro Static Discharge)	11

13 62 664 Replace the lambda oxygen monitoring sensor

PRELIMINARY WORK

1 – Remove the intake neck for intake silencer housing

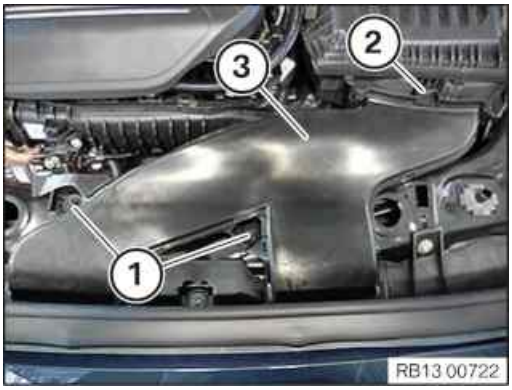

- Loosen nuts (1).
- Loosen the lock (2).
- Guide the intake neck (3) out and remove it.

2 – Removing intake silencer housing

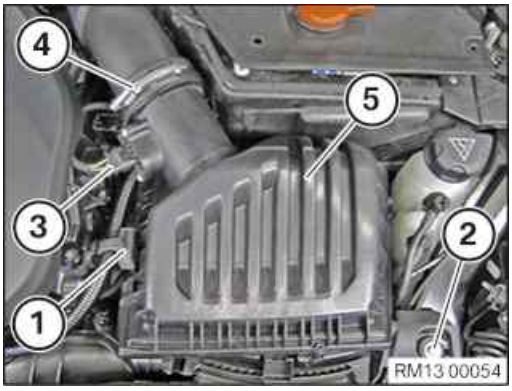

- Loosen the holder (1).
- Loosen screw (2).
- Unlock and loosen connector (3).
- Unfasten clamp (4).
- Pull out and remove the intake silencer housing (5) from the rubber mounts towards the top.

3 – Remove vehicle battery

WARNING

Working on 12 V vehicle electrical system.

Risk of short circuits! Risk of fire!

- Detach battery earth lead from battery.
- For additional batteries: Detach all battery earth leads from additional batteries.

TECHNICAL INFORMATION

For additional information see:
61 00 ... Safety information on handling the vehicle battery
61 00 / 12 00 ... Notes on disconnecting and connecting the vehicle battery
61 12 ... Notes on the intelligent battery sensor (IBS)

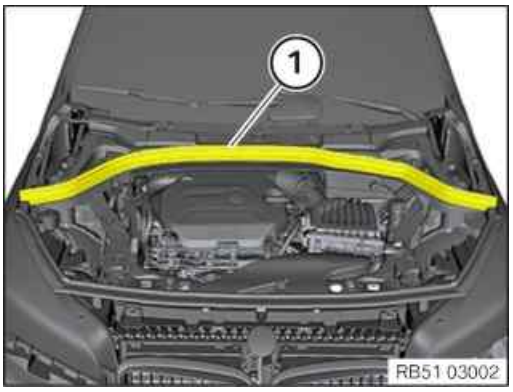

- pull off gasket (1) upwards.

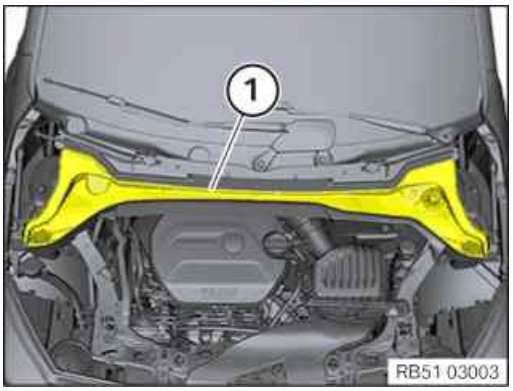

- Remove the cowl panel cover (1) to the top.

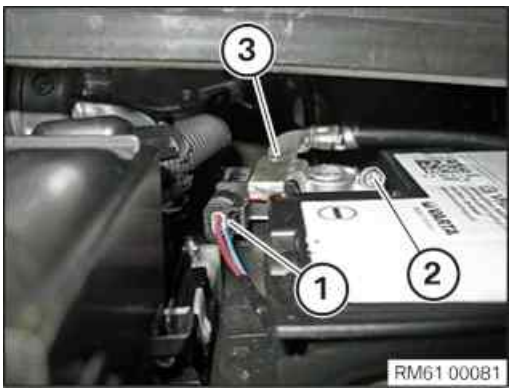

- Unlock and disconnect connector (1).
- Slacken nut (2).
- Disconnect the negative battery terminal (3).

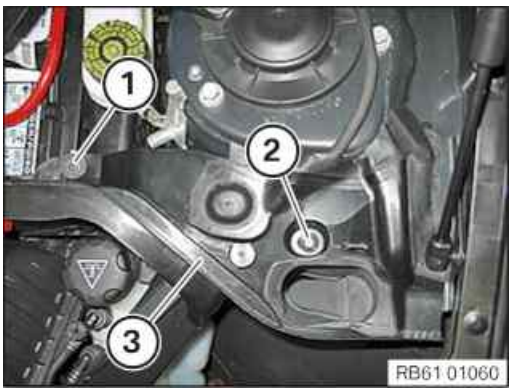

- Release the screw (1) and the expanding rivet (2).
- Remove the fixture for the gasket (3).

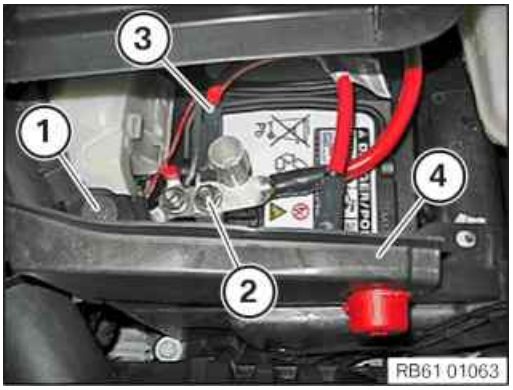

- Loosen screw (1).
- Unscrew the nut (2) and remove the positive battery cable (3) with the cover of the remote positive terminal (4).
- Tighten nuts (2) on the positive terminal hand-tight.

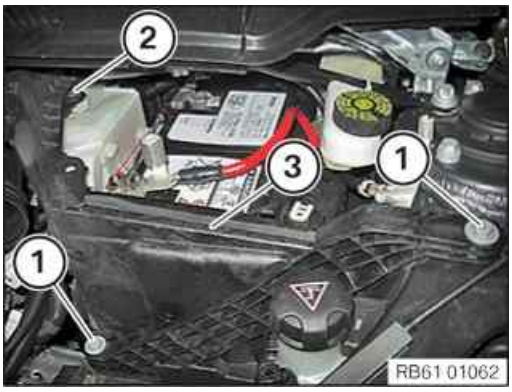

- Loosen screws (1).
- Unscrew the bolt (2) and guide the tension strut (3) out.

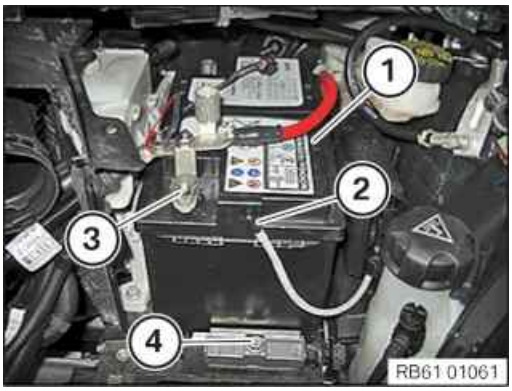

- Pull off the vent hose (2).
- Slacken the nut (3) on the positive terminal and remove the positive terminal.

WARNING

Unprotected battery terminals.

Risk of short circuits! Risk of fire!

- Cover the vehicle battery.

- Loosen the screw (4) and remove the holder.
- Remove vehicle battery (1).

4 – Removing the upper bulkhead cover

- Loosen screws (1).

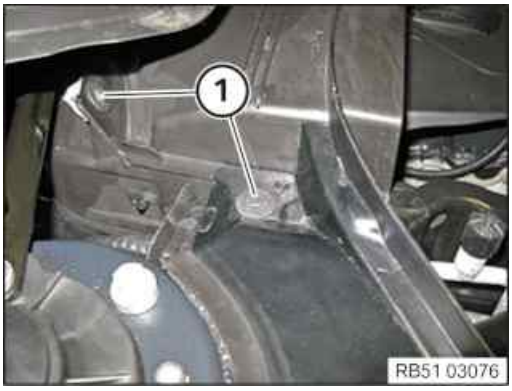

- Loosen screws (1).

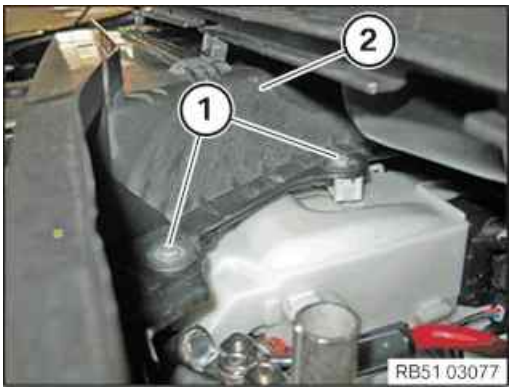

- Loosen screws (1).
- Feed out and remove the upper bulkhead cover (2).

5 – Remove electronics box

Prerequisite

Battery earth lead is disconnected.

RISK OF DAMAGE

Electrostatic discharge.

Damage to or destruction of electrical components.

- Leave electrical components in original packaging until just before they are installed. Use the original packaging only for any return shipments. Always package removed components straight away.
- Read and comply with user information on using the associated special tool 12 7 060.
- Only touch the housings of electrical components. Do not touch pins or multi-pin connectors directly.
- Wear electrically conductive clothing and antistatic shoes (with ESD symbol).
- For additional information see: 61 35 Information on electrostatic discharge (ESD) protection.

RISK OF DAMAGE

Damage to wires when disconnecting connectors and plug connections.

Sheared wires can cause a short circuit.

- Do not pull on the wires when disconnecting connectors and plug connections.

TECHNICAL INFORMATION

Follow instructions for removing and installing control units.

For additional information see: 12 00 ... Notes on removal and installation of control units

TECHNICAL INFORMATION

Disconnecting control units may cause fault code entries and functional limitations. Fault code entries must be read out and deleted if necessary.

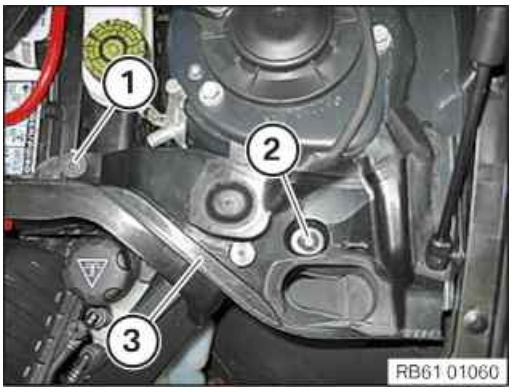

- Release the screw (1) and the expanding rivet (2).
- Remove the fixture for the gasket (3).

- Loosen screw (1).
- Place cover (2) of the positive battery connection point to one side.

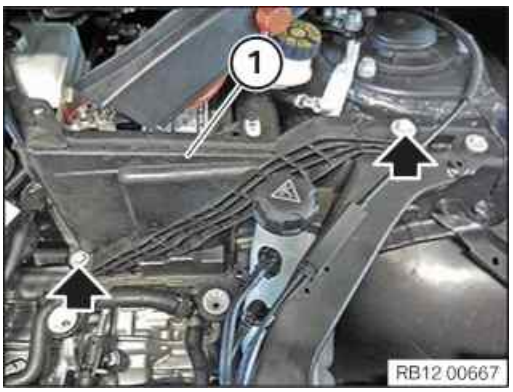

- Remove screws (arrows).
- Guide out tension strut (1) and remove.

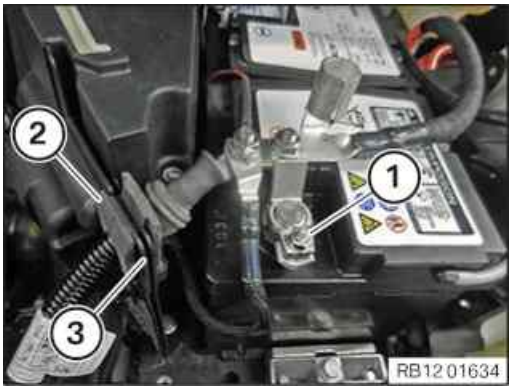

- Undo positive battery terminal (1).
- Feed out positive battery terminal (1) and set aside.
- Guide the positive battery cable (2) out of the holder (3) and lay to one side.

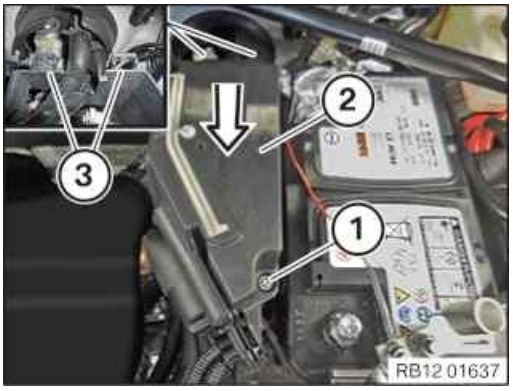

- Loosen screw (1).
- Unlock cover (2) and feed out and remove from the guides (3) in the direction of arrow.

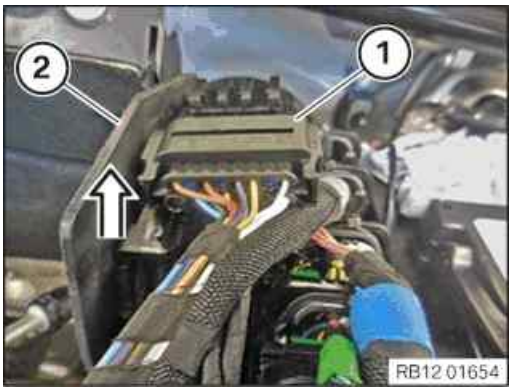

- Feed out connector (1) from the electronics box (2) and remove in the direction of arrow.
- Unlock and loosen connector (1).

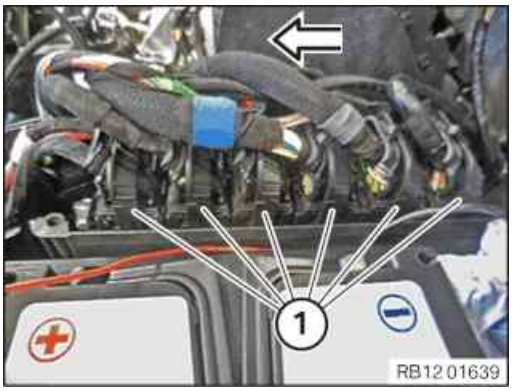

- Unlock and remove the connector (1) in the direction of the arrow.
- Feed out connector (1) and place to one side.

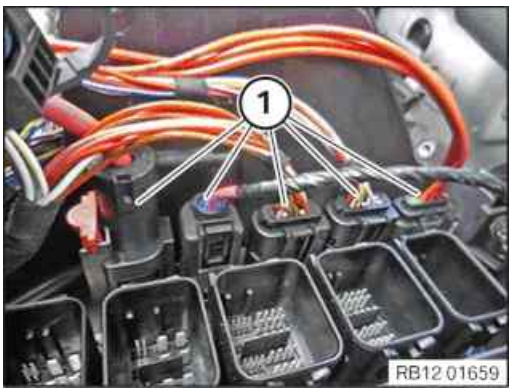

- Unlock and loosen connector (1).

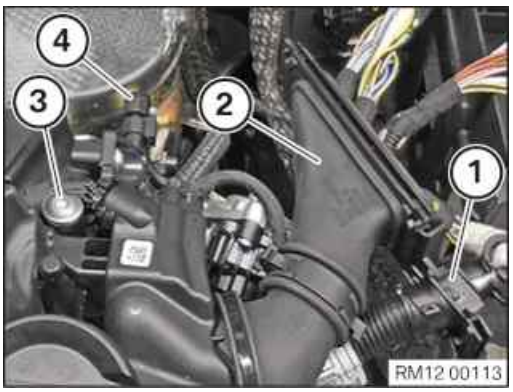

- Detach the wiring harness (1) from the electronics box.
- Detach the wiring harnesses (2) from electronics box.
- Loosen screw (3).
- Set wiring harnesses (1) and (2) aside.
- Unlock the connector (4) and disconnect it from the differential pressure sensor.

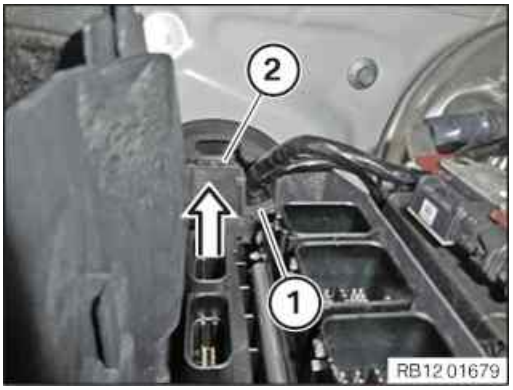

- Unlock and loosen holder (1).
- Guide the holder (1) out of the electronics box (2) in direction of arrow and set it aside.

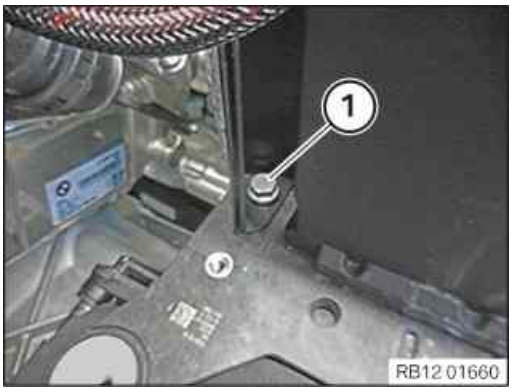

- Loosen screw (1).

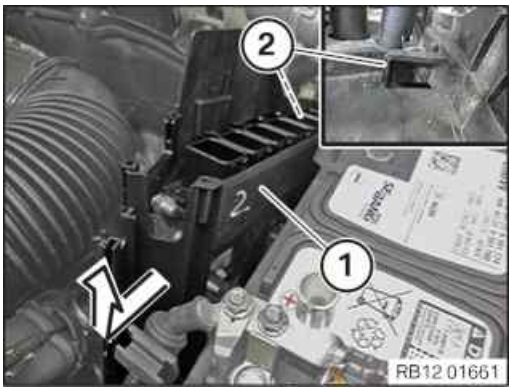

- Guide the electronics box (1) out of the guide (2) in direction of arrow and remove.

6 – Remove battery holder

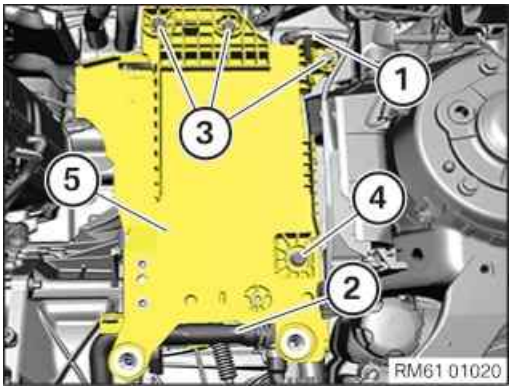

- Detach the cable clip (1) from the battery holder (5).
- Detach the coolant line (2) from the battery holder (5).
- Loosen screws (3).
- Loosen screw (4).
- Thread out and remove the battery holder (5).

7 – Removing the front underbody protection

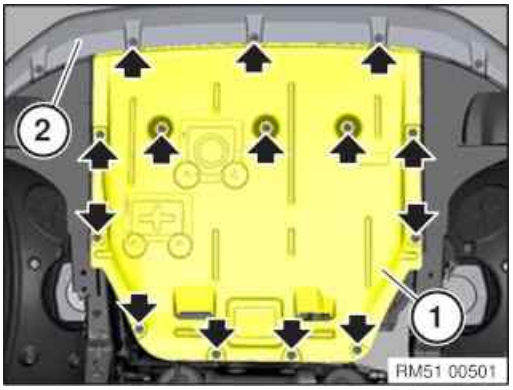

- Remove screws (arrows).
- Pull out and remove front underbody protection (1) under the bumper panel (2).

MAIN WORK

8 – Remove the monitoring oxygen sensor

WARNING

Hot surfaces.

Risk of burning!

- Perform all work only on components that have cooled down.

RISK OF DAMAGE

Electrostatic discharge.

Damage to or destruction of electrical components.

- Leave electrical components in original packaging until just before they are installed. Use the original packaging only for any return shipments. Always package removed components straight away.
- Read and comply with user information on using the associated special tool 12 7 060.
- Only touch the housings of electrical components. Do not touch pins or multi-pin connectors directly.
- Wear electrically conductive clothing and antistatic shoes (with ESD symbol).
- For additional information see: 61 35 Information on electrostatic discharge (ESD) protection.

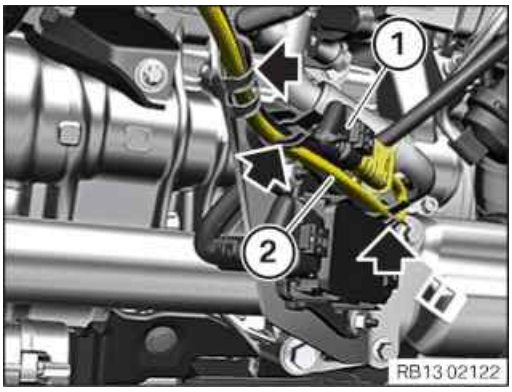

- Unlock plug connection (1) and disconnect.
- Feed oxygen monitor sensor cable (1) out of the clamps (arrows).

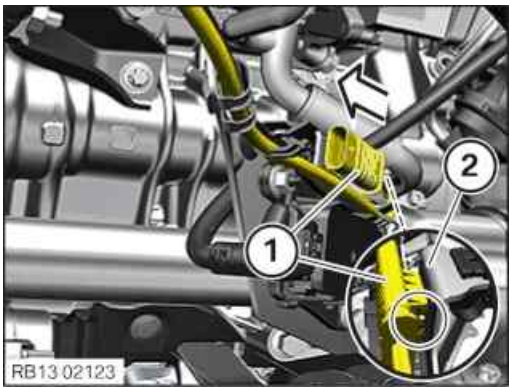

- Unlock the connector (1) in the marked area and disconnect it from the holder (2) in the direction of arrow.

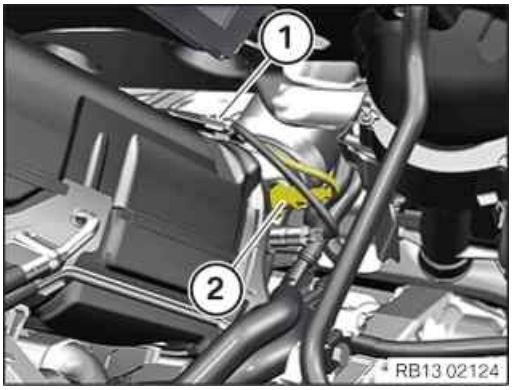

- Guide the cable of the monitoring oxygen sensor (2) out of the clamp (1).
- Release the monitoring oxygen sensor (2) using special tool **0 491 074 (11 7 020)**.
- Remove the monitoring oxygen sensor (2).

9 – Install the monitoring sensor

TECHNICAL INFORMATION

New oxygen sensors are to be greased lightly and evenly on the thread.

For oxygen sensors that are reused, the following should be observed:

Lightly and evenly grease the oxygen sensor only on the thread. Do not clean and grease that part of the oxygen sensor which protrudes in the exhaust branch (sensor ceramics).

For additional information see: 11 00 ... Overview of consumables in Electronic Parts Catalogue

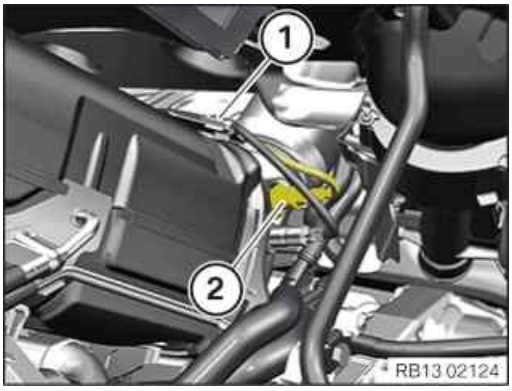

- Feed in the monitoring oxygen sensor (2) and install.
- Tighten the monitoring oxygen sensor (2) with special tool **0 491 074 (11 7 020)**.

Monitoring sensor

Sensor		Tightening torque	50 Nm

- Insert the cable of the monitoring oxygen sensor (2) into the clamp (1) and secure it.

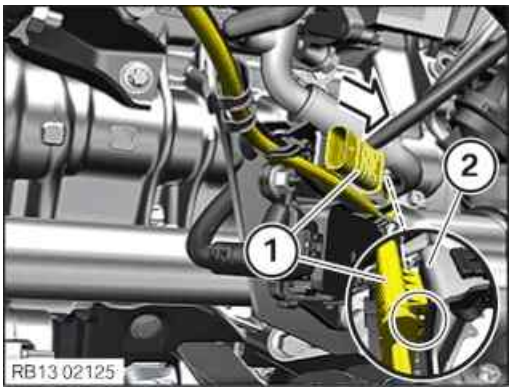

- Connect the connector (1) with the bracket (2) in the direction of arrow.
- Make sure that the connector (1) is locked correctly in the marked area.

  The connector (1) must engage audibly.

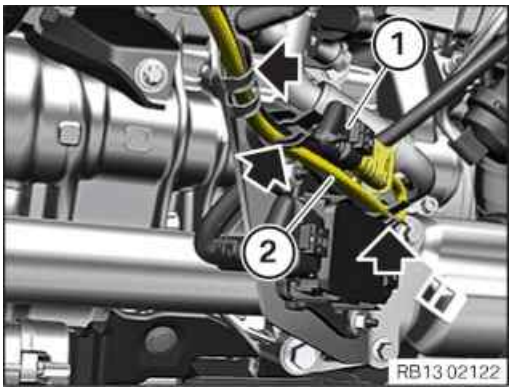

- Insert and attach the cable of the monitoring oxygen sensor (2) to the clamps (arrows).
- Connect connectors (1) and lock.

  The connector (1) must engage audibly.

POSTPROCESSES

10 – Installing the front underbody protection

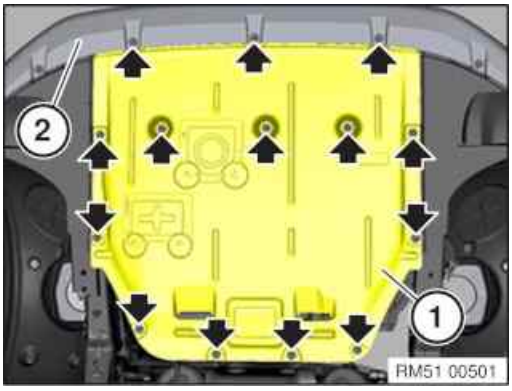

- Guide the front underbody protection (1) in under the bumper panel (2) and position it at the screw points.
- Tighten screws (arrows).

Underbody protection front

			3 Nm

11 – Install the battery holder

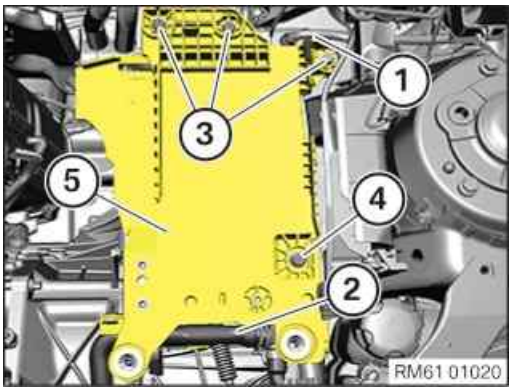

- Feed in and install the battery holder (5).
- Hand-tighten the bolt (4).
- Hand-tighten the bolts (3).
- Tighten down screw (4).

Battery holder to engine support

Hexagon screw M8x30		Tightening torque	19 Nm

- Tighten down screws (3).

Battery holder to engine support

Hexagon screw M8x30		Tightening torque	19 Nm

- Fasten the coolant line (2) on the battery holder (5).
- Fasten the cable clip (1) on the battery holder (5).

12 – Install electronics box

Prerequisite

Battery earth lead is disconnected.

RISK OF DAMAGE

Improper routing of cables and wiring harnesses.

Trapped, crushed or damaged cables may cause short circuits and malfunctions.

- Route all cables without abrasions, do not trap and crush.

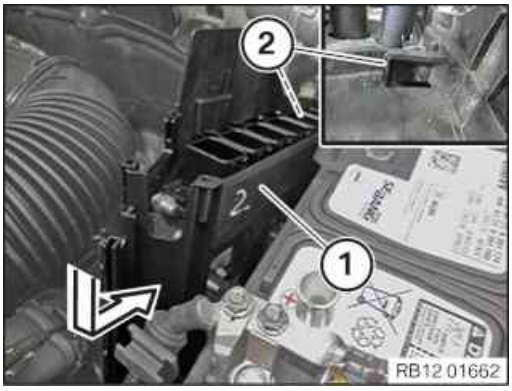

- Guide in and install the electronics box (1) into the guide (2) in direction of arrow.

- Make sure that the electronics box (1) is positioned correctly on the bulkhead (2).

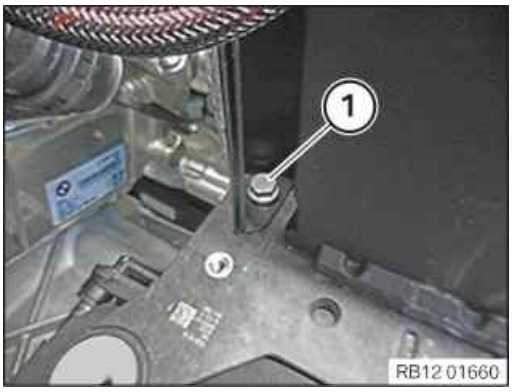

- Tighten down screw (1).

Electronics box to battery tray

M8X16		Tightening torque	15 Nm

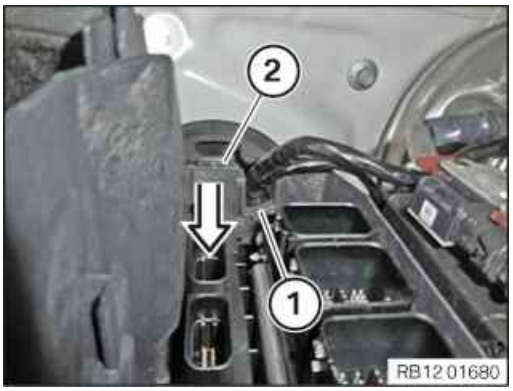

- Guide in and install the holder (1) in the electronics box (2) in direction of arrow.
- Make sure the bracket (1) engages audibly.

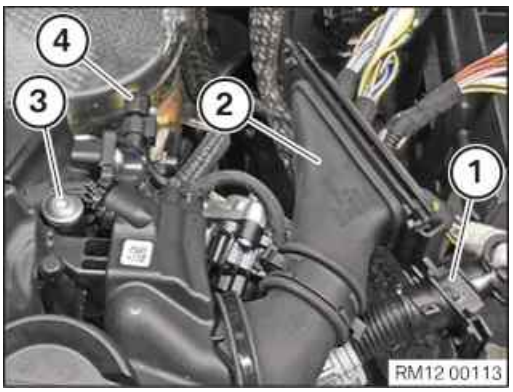

- Lay vehicle wiring harnesses (1) and (2) and mount on electronics box.
- Tighten down screw (3).

Wiring harness to cylinder head cover

TS5x20		Tightening torque	3,5 Nm

- Attach connector (4) to the differential pressure sensor and lock it audibly.

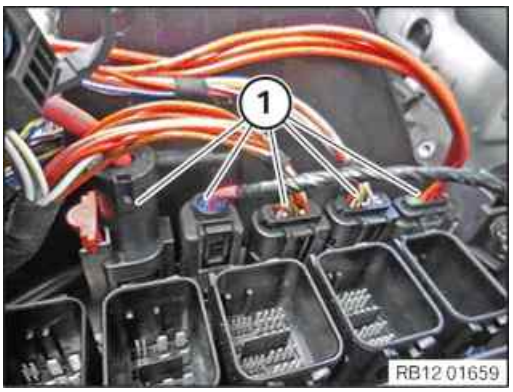

- Connect and lock the connector (1).
- Make sure the connectors (1) engage audibly.

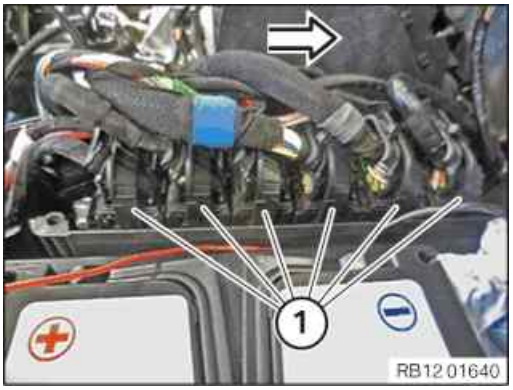

- Connect connector (1) in direction of arrow and lock.
- Make sure the connectors (1) engage audibly.

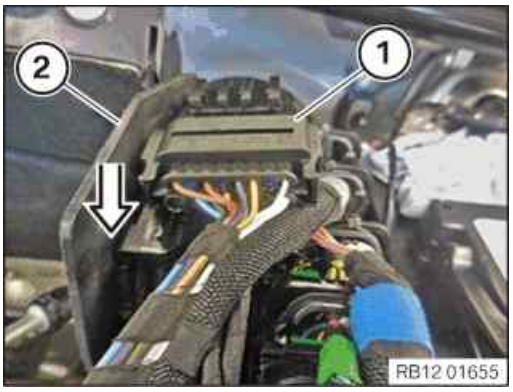

- Connect and lock the connector (1).
- Make sure the connector (1) engages audibly.
- Insert the connector (1) in the direction of arrow at the electronics box (2) and install.

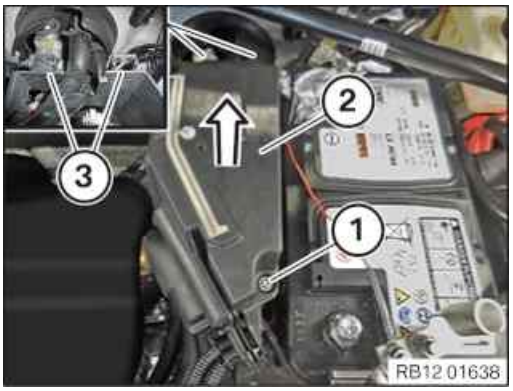

- Insert the cover (2) into the guides (3) in the direction of arrow and install.
- Make sure the cover audibly engages (2) in the guides (3).
- Tighten down screw (1).

Cover to electronics box

RF5x26.5		Tightening torque	2,5 Nm

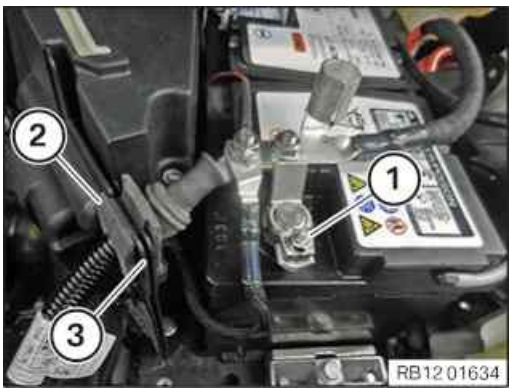

- Thread in positive battery cable (2) on holder (3) and install.
- Feed in and install positive battery terminal (1).
- Tighten positive battery terminal (1).

Positive battery terminal to battery

NutM6		Tightening torque	5 Nm

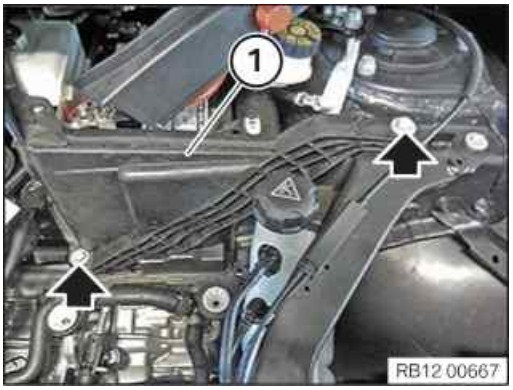

- Feed in and install tension strut (1).
- Tighten screws (arrows).

Tension strut to spring strut dome/battery tray

M8		Tightening torque	19 Nm

- Feed in and install cover (2) at the positive battery connection point.
- Tighten down screw (1).

Positive battery connection point cover to engine compartment partition wall

		Tightening torque	3 Nm

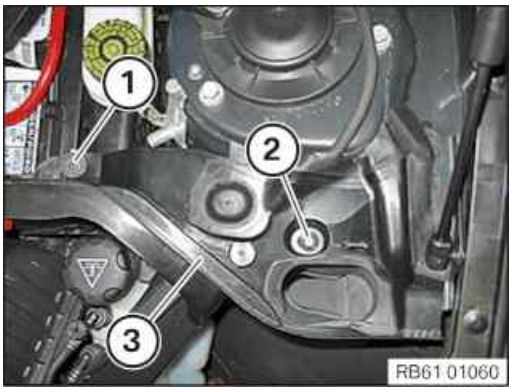

- Position the fixture for the gasket (3) and secure with the expanding rivet (2).
- Tighten down screw (1).

Battery cover

Screw		2,8 Nm

13 – Installing the upper bulkhead cover

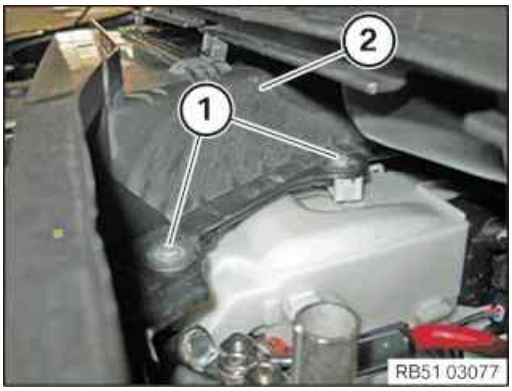

- Feed in and install cover (2) of the bulkhead at the top.
- Tighten the screws (1).

Bulkhead cover, top

Screw		Tightening torque	3 Nm

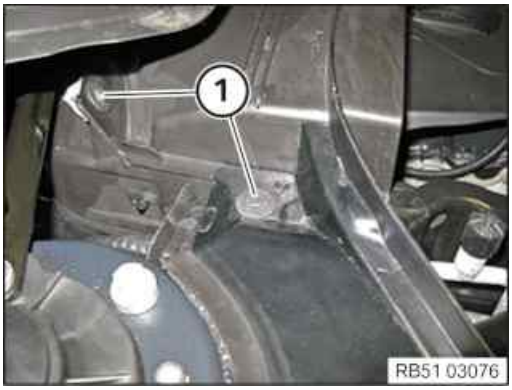

- Tighten the screws (1).

Bulkhead cover, top

Screw		Tightening torque	3 Nm

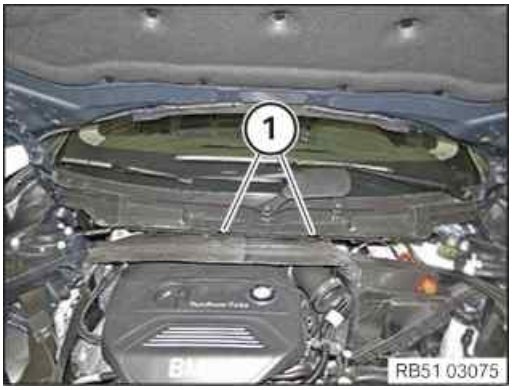

- Tighten the screws (1).

Bulkhead cover, top

Screw		Tightening torque	3 Nm

14 – Install vehicle battery

TECHNICAL INFORMATION

For additional information see:
61 00 ... Safety information on handling the vehicle battery
61 00 / 12 00 ... Notes on disconnecting and connecting the vehicle battery
61 12 ... Notes on the intelligent battery sensor (IBS)

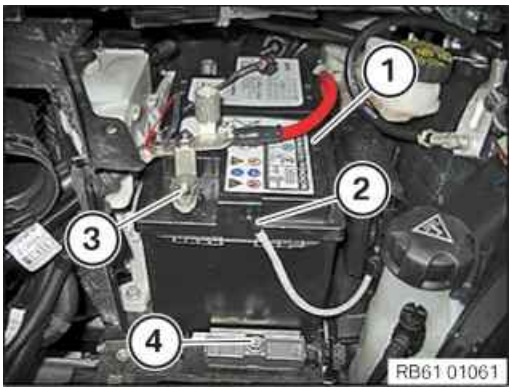

- Install vehicle battery (1).
- Tighten the holder with the bolt (4).

Battery terminal rail to battery tray

M8 screw		19 Nm

- Position the vent hose (2).
- Position the positive terminal.
- Tighten the nut (3) on the positive terminal.

Positive battery terminal

NutM6		5 Nm

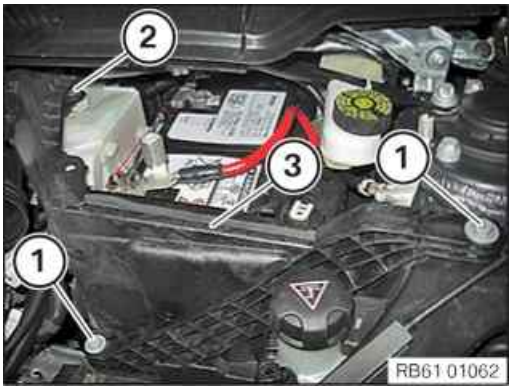

- Insert the tension strut (3).
- Tighten down screw (2).

Battery cover

Screw		2,8 Nm

- Tighten the screws (1).

Trailing link

M8 screw		19 Nm

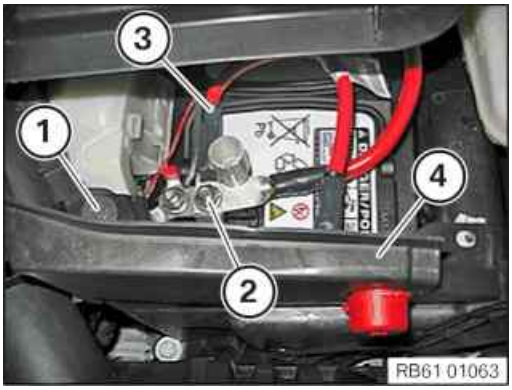

- Position the positive battery cable (3) with the cover of the remote positive terminal (4).
- Tighten down screw (1).

Battery cover

Screw		2,8 Nm

- Tighten the nut (2) on the positive terminal.

Positive battery cable to battery terminal

Nut M8		15,2 Nm

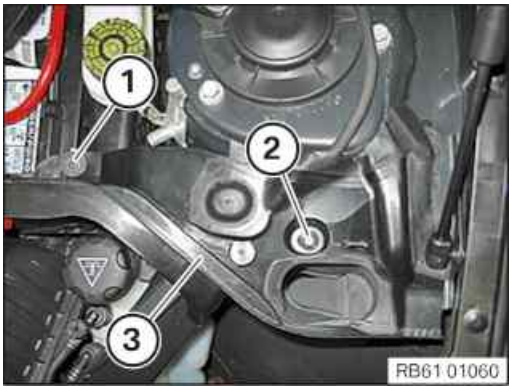

- Position the fixture for the gasket (3) and secure with the expanding rivet (2).
- Tighten down screw (1).

Battery cover

Screw		2,8 Nm

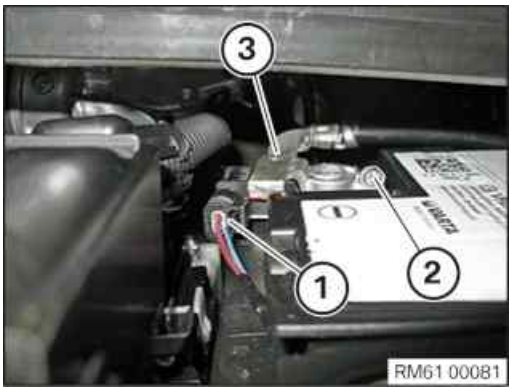

- Position the negative battery terminal (3).
- Tighten nut (2).

Negative battery terminal (with IBS)

NutM6		5 Nm

- Connect connectors (1) and lock.

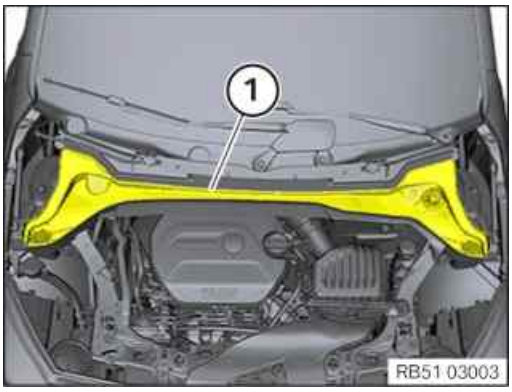

- Feed in the cowl panel cover (1).

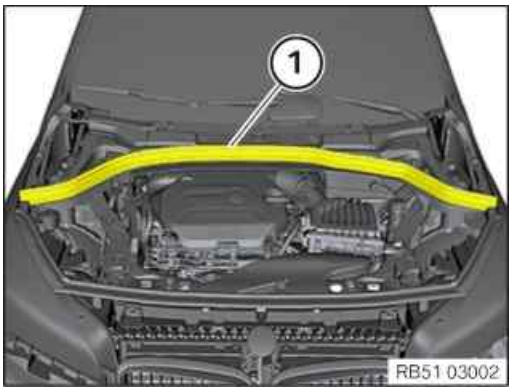

- Press the gasket (1) in a downwards direction.

15 – Installing intake silencer housing

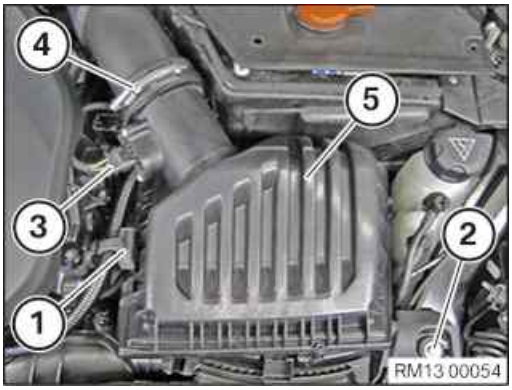

- Insert the intake silencer housing (5) into the rubber mounts and install it.

  Intake filter housing (5) must engage audibly.
- Tighten down screw (2).

Intake silencer housing to lock bridge

M6X30		Tightening torque	8 Nm

- Tighten clamp (4).

Clean air pipe to intake silencer housing

Clamp		Tightening torque	3 Nm

- Connect and lock the connector (3).

  The connector (3) must engage audibly.
- Insert and install the holder (1).

16 – Install the intake neck for the intake filter housing

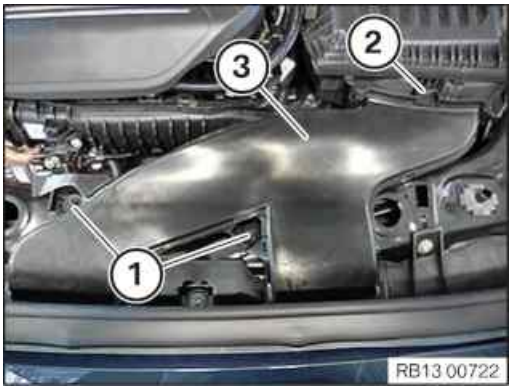

- Insert and install the intake neck (3).

  The lock (2) must audibly engage.
- Tighten nuts (1).

Intake neck to cross connection

M6		Tightening torque	8 Nm

Additional Information

Overview of Tightening Torques

Monitoring sensor Used in step 9

Sensor		Tightening torque	50 Nm

Underbody protection front Used in step 10

			3 Nm

Battery holder to engine support Used in step 11

Hexagon screw M8x30		Tightening torque	19 Nm

Electronics box to battery tray Used in step 12

M8X16		Tightening torque	15 Nm

Wiring harness to cylinder head cover Used in step 12

TS5x20		Tightening torque	3,5 Nm

Cover to electronics box Used in step 12

RF5x26.5		Tightening torque	2,5 Nm

Positive battery terminal to battery Used in step 12

NutM6		Tightening torque	5 Nm

Tension strut to spring strut dome/battery tray Used in step 12

M8		Tightening torque	19 Nm

Positive battery connection point cover to engine compartment partition wall Used in step 12

		Tightening torque	3 Nm

Battery cover Used in step 12 14

Screw			2,8 Nm

Bulkhead cover, top Used in step 13

Screw		Tightening torque	3 Nm

Battery terminal rail to battery tray Used in step 14

M8 screw			19 Nm

Positive battery terminal Used in step 14

NutM6			5 Nm

Trailing link Used in step 14

M8 screw			19 Nm

Positive battery cable to battery terminal Used in step 14

Nut M8			15,2 Nm

Negative battery terminal (with IBS) Used in step 14

NutM6			5 Nm

Intake silencer housing to lock bridge Used in step 15

M6X30		Tightening torque	8 Nm

Clean air pipe to intake silencer housing			Used in step 15
Clamp		Tightening torque	3 Nm

Intake neck to cross connection			Used in step 16
M6		Tightening torque	8 Nm

Overview of Special Tools

0 491 074 (11 7 020) Socket wrench insert

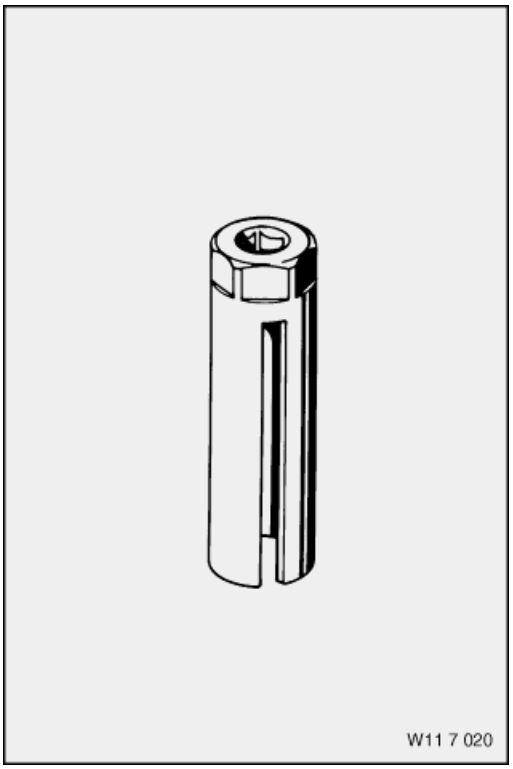

Common		Used in step 8 9
Usage	(Socket wrench insert 22 mm) For loosening and tightening the oxygen sensor	
Included in the tool or work		
Storage location	A9	
Replaced by		
In connection with		
SI-Number		

Links

General repair instructions	Used in step
61 20 ... Notes on AGM battery	3 14
61 12 ... Notes on intelligent battery sensor (IBS)	3 14
61 00 ... Notes for disconnecting and connecting battery	3 14
61 00 ... Safety information for handling vehicle battery	
61 20 ... Battery replacement information	

Repair instructions	Used in step
61 35 ... Notes on ESD protection (Electro Static Discharge)	5 8

13 62 650 Replacing camshaft sensor

PRELIMINARY WORK

1 – Removing the acoustic cover

WARNING

Hot surfaces.

Risk of burning!

- Perform all work only on components that have cooled down.

RISK OF DAMAGE

Damage to the acoustic cover.

Jerky movements during disassembly and excessive application of force during installation may result in breakage of the acoustic cover.

- Disassemble or mount the acoustic cover carefully.
- Disassemble or mount snap-lock couplings of the ball pivots one after the other.
- Disassemble or mount acoustic cover only at temperatures >20 °C.
- Use only distilled water as an auxiliary material during installation, no lubricants.

- Unclip the acoustic cover from the marked areas towards the top.

2 – Remove resonator

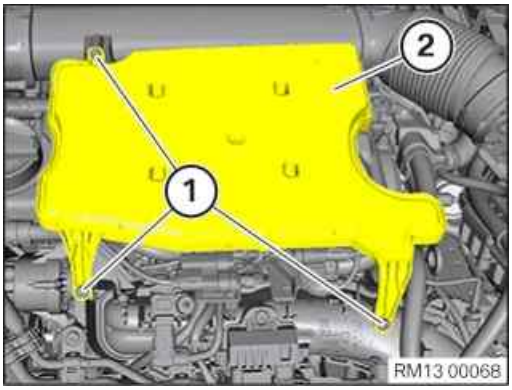

- Loosen screws (1).
- Guide out and remove the resonator (2).

3 – Remove the acoustic cover for the injectors

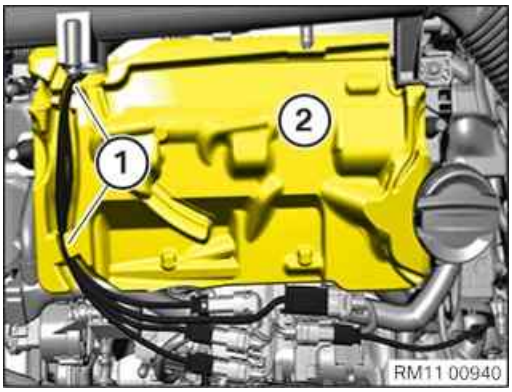

- Release the wiring harness (1) from the brackets.
- Guide the acoustic cover (2) out and remove.

4 – Removing the camshaft sensor

RISK OF DAMAGE

Electrostatic discharge.

Damage to or destruction of electrical components.

- Leave electrical components in original packaging until just before they are installed. Use the original packaging only for any return shipments. Always package removed components straight away.
- Read and comply with user information on using the associated special tool 12 7 060.
- Only touch the housings of electrical components. Do not touch pins or multi-pin connectors directly.
- Wear electrically conductive clothing and antistatic shoes (with ESD symbol).
- For additional information see: 61 35 Information on electrostatic discharge (ESD) protection.

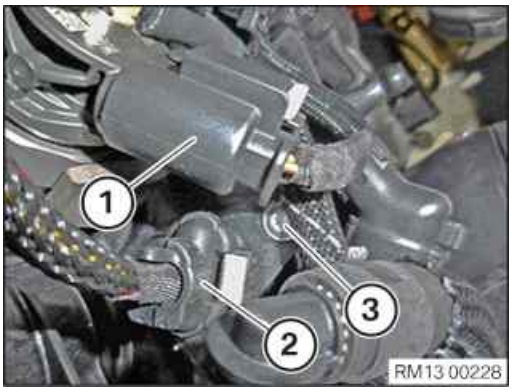

- Unlock and disconnect connector (1).
- Unlock and disconnect connector (2).
- Loosen screw (3).

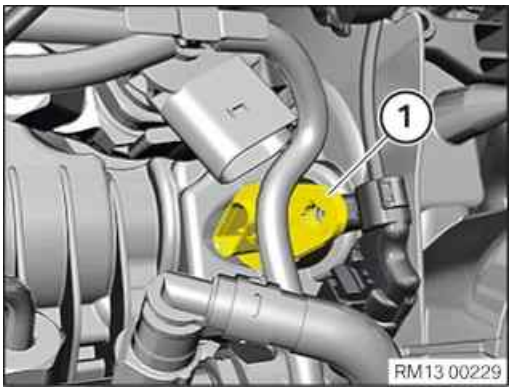

- Feed out and remove the camshaft sensor (1).

5 – Installing the camshaft sensor

- Check sealing ring (1) for damage, renew if necessary.

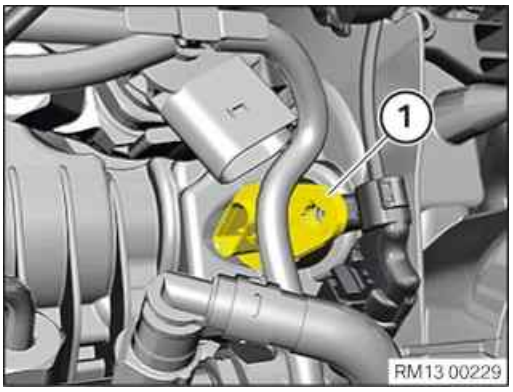

- Feed in and install the camshaft sensor (1).

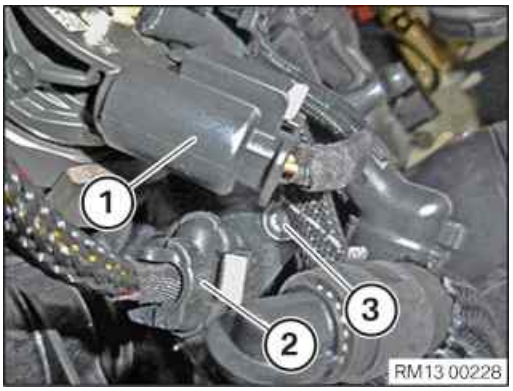

- Tighten down screw (3).

Camshaft sensor to cylinder head cover

TS5x20		Tightening torque	4 Nm

- Connect connectors (2) and lock.
- Connect connectors (1) and lock.

  The connectors (1) and (2) must audibly engage.

POSTPROCESSES

6 – Install the acoustic cover for the injectors

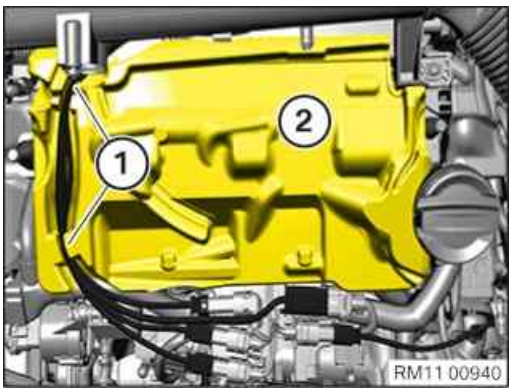

- Feed the acoustic cover (2) in and install.
- Fasten the wiring harness (1) to the brackets.

7 – Install resonator

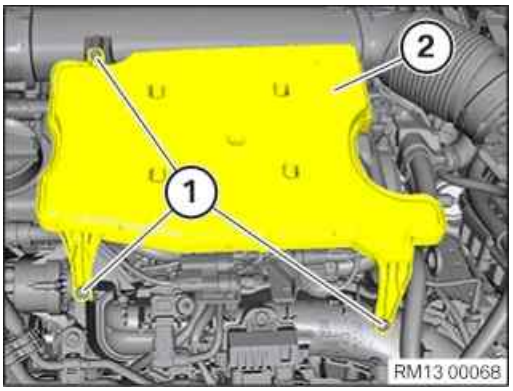

- Insert and install the resonator (2).
- Renew screws (1).

  Parts: Bolts
- Tighten the screws (1).

Resonator to manifold and clean air pipe

Screw TS6	Renew screw.	Tightening torque	5 Nm

8 – Install acoustic cover

RISK OF DAMAGE

Damage to the acoustic cover.

Jerky movements during disassembly and excessive application of force during installation may result in breakage of the acoustic cover.

- Disassemble or mount the acoustic cover carefully.
- Disassemble or mount snap-lock couplings of the ball pivots one after the other.
- Disassemble or mount acoustic cover only at temperatures >20 °C.
- Use only distilled water as an auxiliary material during installation, no lubricants.

- Check for correct installation of all rubber mounts in the acoustic cover (1).

- Clip in the acoustic cover into the holders in the indicated areas.
- Make sure that the acoustic cover engages audibly.

Additional Information

Overview of Tightening Torques

Camshaft sensor to cylinder head cover — Used in step 5

TS5x20		Tightening torque	4 Nm

Resonator to manifold and clean air pipe — Used in step 7

Screw TS6	Renew screw.	Tightening torque	5 Nm

Links

Repair instructions	Used in step
61 35 ... Notes on ESD protection (Electro Static Discharge)	4

13 62 535 Replacing charge-air pressure sensor (B47, B37)

Necessary preliminary tasks:

- Remove acoustic cover

Removal:

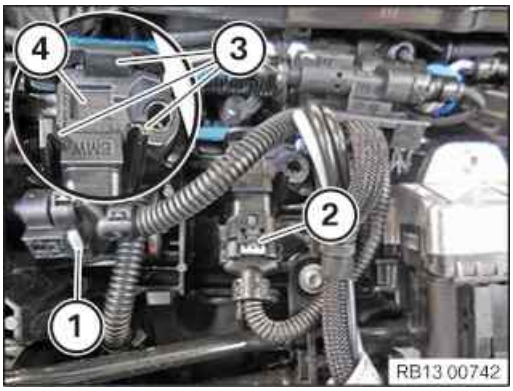

Unlock connector (1) and pull off.

Unlock connector (2) and remove.

Release lock (3).

Remove charge-air pressure sensor (4).

Preparation for installation:

Check sealing ring (1) of charging pressure sensor and replace in case of damage.

Part: Sealing ring

Prior to installation, apply a thin coat of anti-friction agent to sealing ring (1) of charge-air pressure sensor.

Installation:

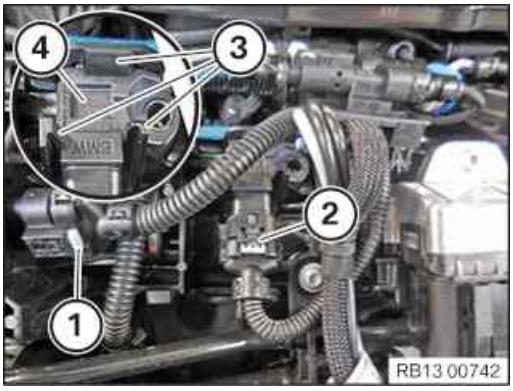

Install and lock charging pressure sensor (4).
Lock (3) must snap audibly into place.
Connect connector (2) and lock.
Attach and lock connector (1).
Connectors must snap audibly into place.

Required follow-up work:

- Install the acoustic cover.

13 62 531 Replacing coolant temperature sensor (B37)

Special tools required:

- 11 8 850

Recycling:

Catch and dispose of escaping coolant.

Observe country-specific waste disposal regulations.

Necessary preliminary tasks:

- Remove resonator.

Removal:

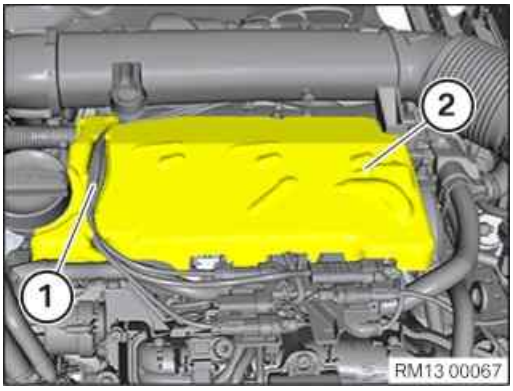

Release cable (1) from sound insulation (2).

Remove sound insulation (2) upwards.

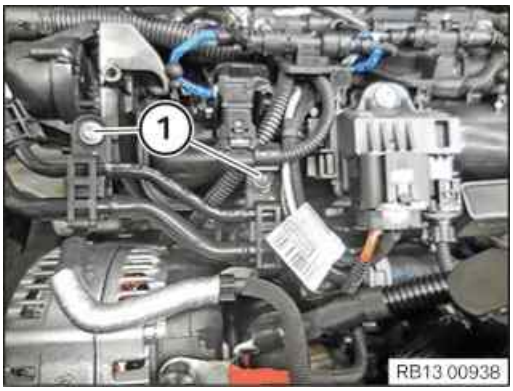

Release screws (1).

Lay fuel lines to one side.

Unlock and release connector (1) from fuel pressure sensor.

Unlock and release connector (2) on intake plenum.

Unlock and release connector (3) from coolant temperature sensor.

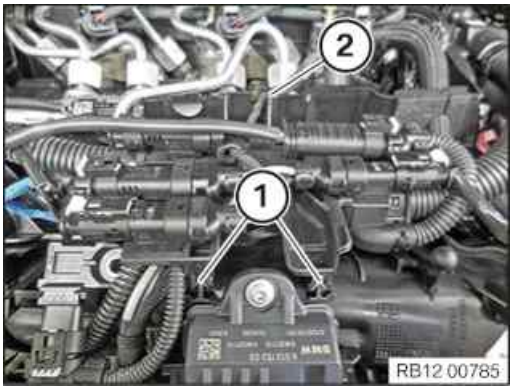

Release clamp (1).

Thread out cable clip (2) and place to side.

Release and remove coolant temperature sensor (1) with special tool 11 8 850 .

Catch and dispose of escaping coolant.

Preparation for installation:

Check O-rings. Replace faulty O-rings.

Installation:

Screw in coolant temperature sensor (2) and tighten with special tool 11 8 850 .

Tightening torque 13 62 2AZ.

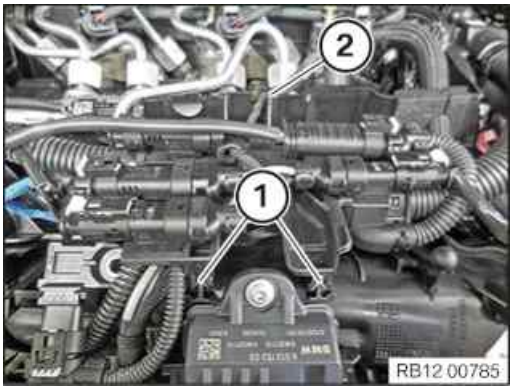

Feed in and install the cable clip (2).

Secure clamp (1).

Connect and lock connector (3) of coolant temperature sensor.

Connect and lock connector (1) of fuel pressure sensor.

Connect and lock connector (2) on intake plenum.

All connectors must audibly engage.

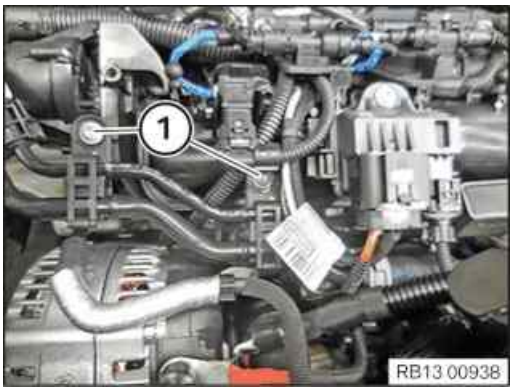

Tighten down screws (1).

Tightening torque 13 53 7AZ.

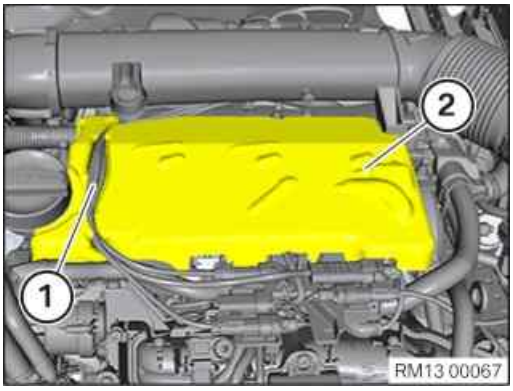

Install sound insulation (2).

Secure cable (1) to sound insulation (2).

Required follow-up work:

- Install resonator
- Check coolant level check, top up coolant if necessary.

13 62 610 Replacing crankshaft pulse sensor (B37, B47)

Necessary preliminary tasks:

- Remove fan cowl.

Removal:

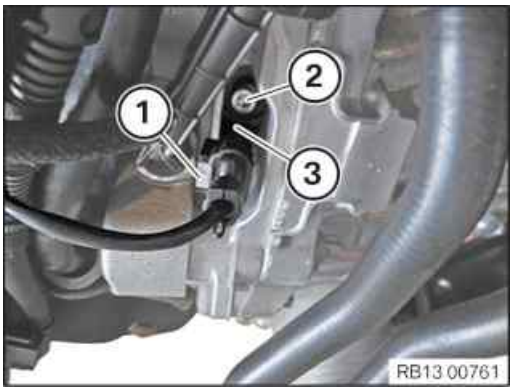

Unlock connector (1) from pulse sensor and detach.
Release screw (2).
Remove pulse generator (3).

Installation:

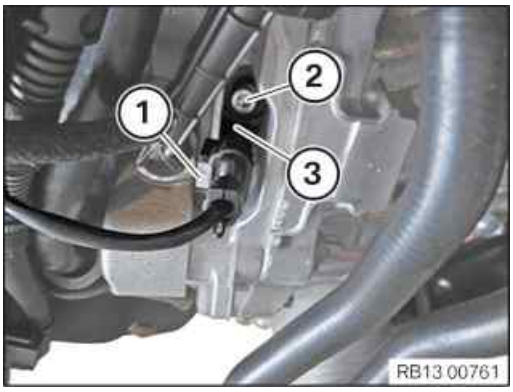

Install pulse sensor (3).
Tighten screw (2).
Tightening torque 13 62 8AZ.
Attach connector (1) on pulse sensor.
Connector (1) must engage audibly.

Required follow-up work:

- Install fan cowl.

13 62 589 Replacing differential pressure sensor

Warning!

Risk of burning!

Only perform this repair work on an engine that has cooled down.

Necessary preliminary tasks:

- Remove clean air pipe.

Removal:

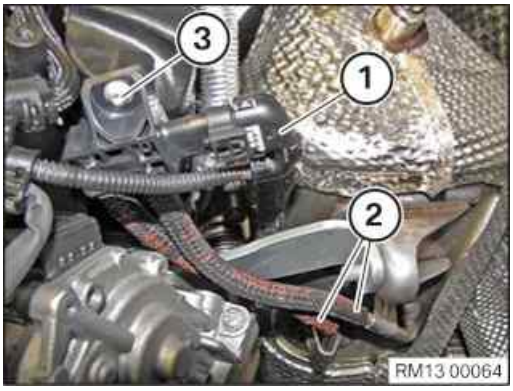

Unlock connector (1) and remove.

Pull off pressure hoses (2).

Release screw (3).

Remove differential-pressure sensor.

Installation:

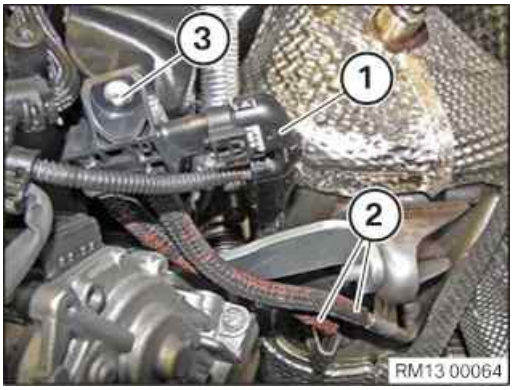

Install differential pressure sensor.

Tighten screw (3).

Tightening torque 13 62 5AZ.

Connect connector (1) to the differential pressure sensor and lock.

Connector (1) must snap audibly into place.

If pressure hoses (2) have been tightened once, they must be renewed.

Part: Pressure hose.

Connect pressure hoses (2).

Secure pressure hose using a screw clamp with a diameter of 15 mm - 19 mm.

Tightening torque 18 30 5AZ.

Required follow-up work:

- Install clean air pipe.

13 62 686 Replacing exhaust temperature sensor

PRELIMINARY WORK

1 – If installed: Removing rear underbody protection

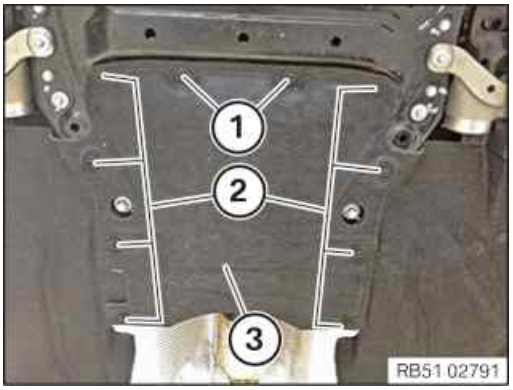

- Loosen screws (1) and (2).
- Remove underbody protection (3).

2 – Removing right underbody panelling

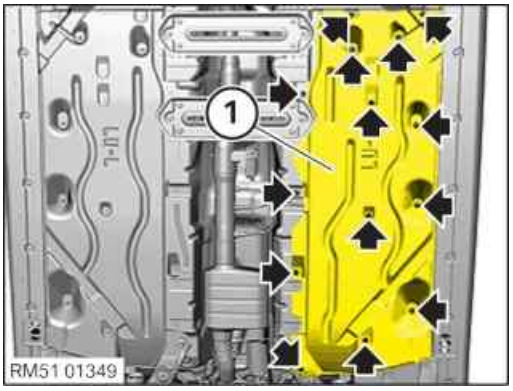

- Unscrew all bolts and nuts (arrows).
- Remove the underbody panelling (1).

MAIN WORK

3 – Remove the exhaust temperature sensor on the catalytic converter

WARNING

Hot surfaces.

Risk of burning!

- Perform all work only on components that have cooled down.

RISK OF DAMAGE

Electrostatic discharge.

Damage to or destruction of electrical components.

- Leave electrical components in original packaging until just before they are installed. Use the original packaging only for any return shipments. Always package removed components straight away.
- Read and comply with user information on using the associated special tool 12 7 060.
- Only touch the housings of electrical components. Do not touch pins or multi-pin connectors directly.
- Wear electrically conductive clothing and antistatic shoes (with ESD symbol).
- For additional information see: 61 35 Information on electrostatic discharge (ESD) protection.

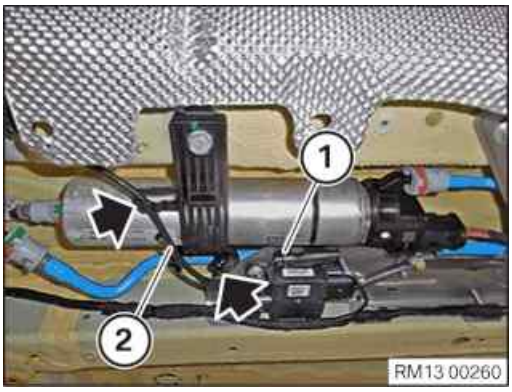

- Unlock and loosen connector (1).
- Feed out the cable (2) of the exhaust temperature sensor from the clamps (arrows) and remove.

- Loosen the cable clip (1).

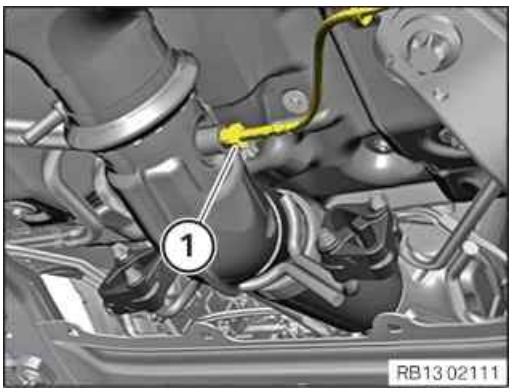

- Loosen exhaust temperature sensor (1).
- Feed out and remove exhaust temperature sensor (1).

4 – Installing exhaust temperature sensor on catalytic converter

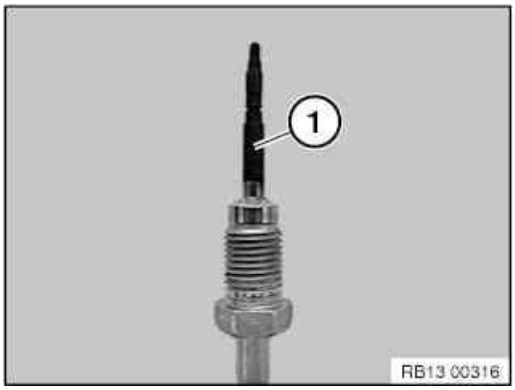

RISK OF DAMAGE

Damage of exhaust temperature sensor.

Damage to exhaust temperature sensors leads to malfunctions.

- Make sure that the gauge tip is not damaged.

- Check the gauge tip (1) for damage and replace the exhaust temperature sensor as needed.

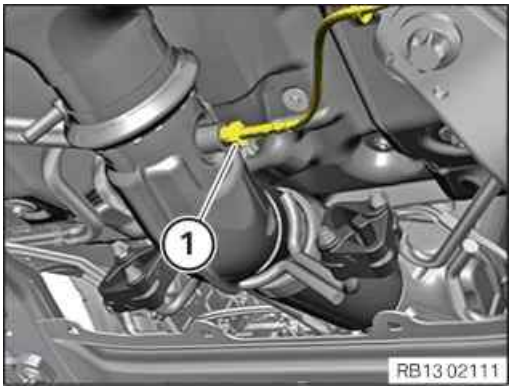

- Feed in and install the exhaust temperature sensor (1).
- Tighten the exhaust temperature sensor (1).

Exhaust-gas temperature sensor to exhaust system

Exhaust-gas temperature sensor		Tightening torque	28 Nm

- Secure the cable clips (1).

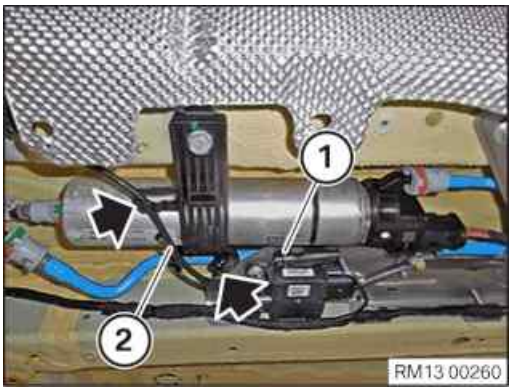

- Feed cable (2) from exhaust temperature sensor into the clamps (arrows) and install.
- Connect and lock the connector (1).

  The connector (1) must engage audibly.

POSTPROCESSES

5 – Installing underbody panelling , right

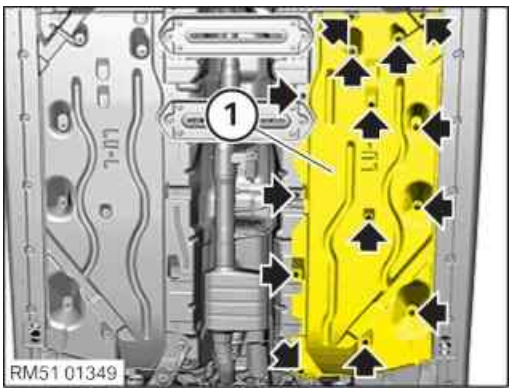

- Correctly position the underbody panelling (1).
- Tighten all bolts and nuts (arrows).

Underbody panelling, side

Hexagon screw		Tightening torque	2,6 Nm

Underbody panelling, side

Plastic nut		Tightening torque	2,6 Nm

6 – If installed: Installing underbody protection at rear

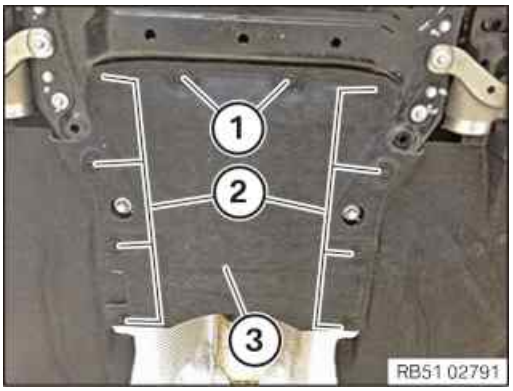

- Install the underbody protection (3).
- Tighten down screws (1) and (2).

Underbody protection to body

Screw		Tightening torque	3 Nm

Additional Information

Overview of Tightening Torques

Exhaust-gas temperature sensor to exhaust system			Used in step 4
Exhaust-gas temperature sensor		Tightening torque	28 Nm

Underbody panelling, side			Used in step 5
Hexagon screw		Tightening torque	2,6 Nm

Underbody panelling, side			Used in step 5
Plastic nut		Tightening torque	2,6 Nm

Underbody protection to body			Used in step 6
Screw		Tightening torque	3 Nm

Links

Repair instructions	Used in step
61 35 ... Notes on ESD protection (Electro Static Discharge)	3

13 62 662 Replacing exhaust temperature sensor for exhaust-gas recirculation

PRELIMINARY WORK

1 – Removing the acoustic cover

WARNING

Hot surfaces.

Risk of burning!

- Perform all work only on components that have cooled down.

RISK OF DAMAGE

Damage to the acoustic cover.

Jerky movements during disassembly and excessive application of force during installation may result in breakage of the acoustic cover.

- Disassemble or mount the acoustic cover carefully.
- Disassemble or mount snap-lock couplings of the ball pivots one after the other.
- Disassemble or mount acoustic cover only at temperatures >20 °C.
- Use only distilled water as an auxiliary material during installation, no lubricants.

- Unclip the acoustic cover from the marked areas towards the top.

2 – Remove resonator

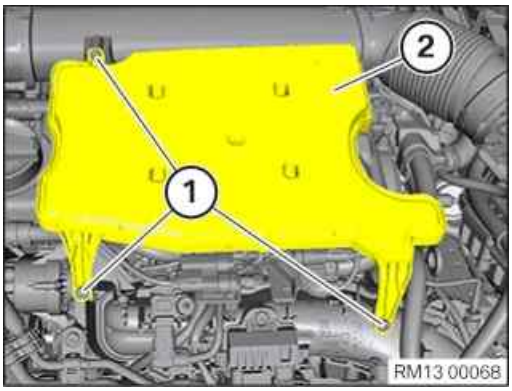

- Loosen screws (1).
- Guide out and remove the resonator (2).

MAIN WORK

3 – Remove the exhaust temperature sensor for the exhaust-gas recirculation

WARNING

Hot surfaces.

Risk of burning!

- Perform all work only on components that have cooled down.

RISK OF DAMAGE

Electrostatic discharge.

Damage to or destruction of electrical components.

- Leave electrical components in original packaging until just before they are installed. Use the original packaging only for any return shipments. Always package removed components straight away.
- Read and comply with user information on using the associated special tool 12 7 060.
- Only touch the housings of electrical components. Do not touch pins or multi-pin connectors directly.
- Wear electrically conductive clothing and antistatic shoes (with ESD symbol).
- For additional information see: 61 35 Information on electrostatic discharge (ESD) protection.

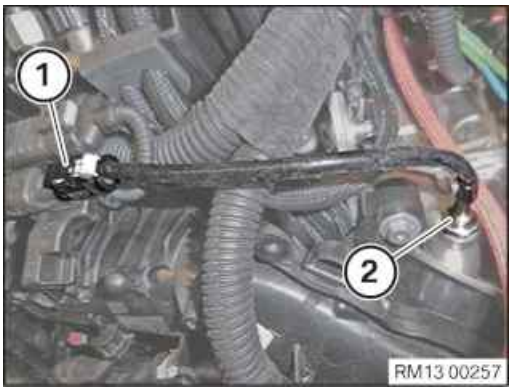

- Unlock and disconnect connector (1).
- Loosen exhaust temperature sensor (2).
- Feed out and remove exhaust temperature sensor (2).

4 – Install the exhaust temperature sensor for the exhaust-gas recirculation

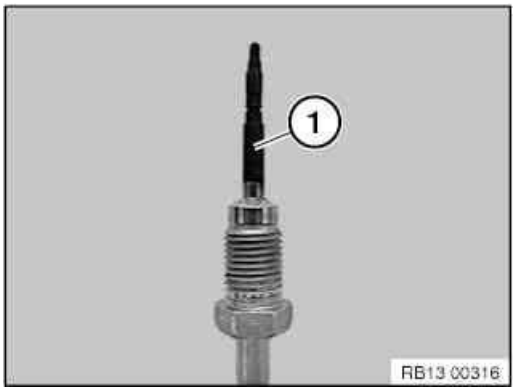

RISK OF DAMAGE

Damage of exhaust temperature sensor.

Damage to exhaust temperature sensors leads to malfunctions.

- Make sure that the gauge tip is not damaged.

- Check the gauge tip (1) for damage and renew the exhaust temperature sensor as needed.

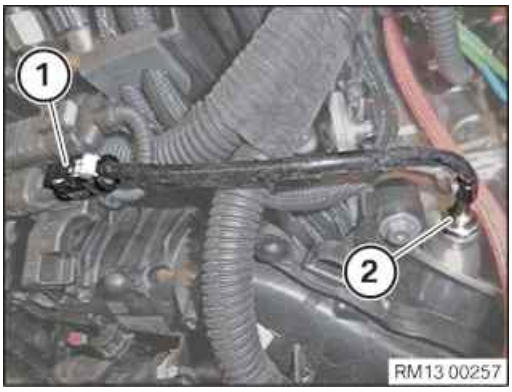

- Feed in and install the exhaust temperature sensor (2).
- Tighten the exhaust temperature sensor (2).

Exhaust temperature sensor for EGR

Sensor		Tightening torque	21,7 Nm

- Connect connectors (1) and lock.

  The connector (1) must engage audibly.

POSTPROCESSES

5 – Install resonator

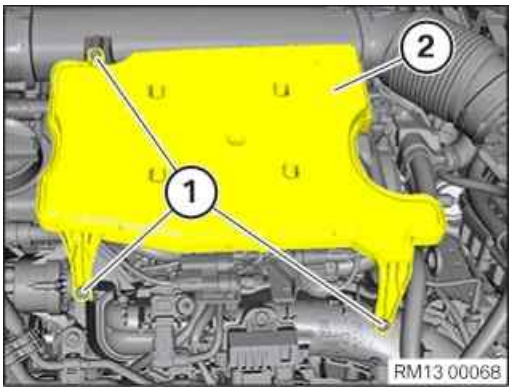

- Insert and install the resonator (2).
- Renew screws (1).

  Parts: Bolts
- Tighten the screws (1).

Resonator to manifold and clean air pipe

Screw TS6	Renew screw.	Tightening torque	5 Nm

6 – Install acoustic cover

RISK OF DAMAGE

Damage to the acoustic cover.

Jerky movements during disassembly and excessive application of force during installation may result in breakage of the acoustic cover.

- Disassemble or mount the acoustic cover carefully.
- Disassemble or mount snap-lock couplings of the ball pivots one after the other.
- Disassemble or mount acoustic cover only at temperatures >20 °C.
- Use only distilled water as an auxiliary material during installation, no lubricants.

- Check for correct installation of all rubber mounts in the acoustic cover (1).

- Clip in the acoustic cover into the holders in the indicated areas.
- Make sure that the acoustic cover engages audibly.

Additional Information

Overview of Tightening Torques

Exhaust temperature sensor for EGR			Used in step 4
Sensor		Tightening torque	21,7 Nm

Resonator to manifold and clean air pipe			Used in step 5
Screw TS6	Renew screw.	Tightening torque	5 Nm

Links

Repair instructions	Used in step
61 35 ... Notes on ESD protection (Electro Static Discharge)	3

13 62 662 Replacing exhaust-gas recirculation temperature sensor (B37, B47)

Warning!

Risk of burning!

Only perform this repair work on an engine that has cooled down.

Necessary preliminary tasks:

- Resonator.

Removal:

Release cable clip (1) on intake silencer housing.

Unlock connector (2) and remove.

Release and remove temperature sensor (3).

Installation:

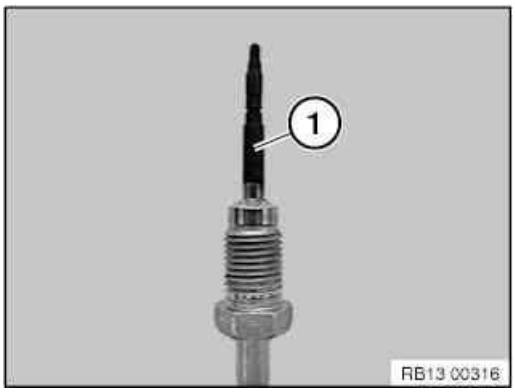

Attention!

When installing the exhaust-gas temperature sensor make sure that the gauge tip (1) is not damaged.

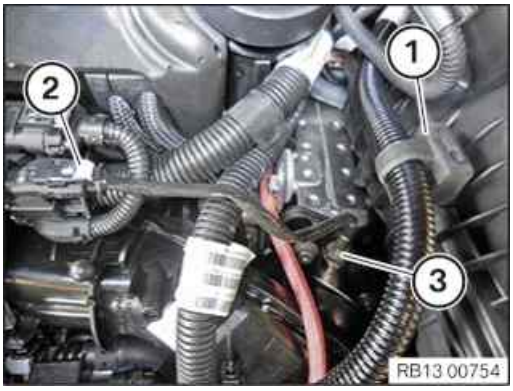

Install and tighten temperature sensor (3).

Tightening torque 13 62 7AZ.

Connect connector (2) and lock.

Connector (2) must snap audibly into place.

Secure cable clip (1) to intake silencer housing.

Required follow-up work:

- Install resonator.

13 62 650 Replacing pulse sensor for camshaft (B37, B47)

Necessary preliminary tasks:

- Remove resonator.

Removal:

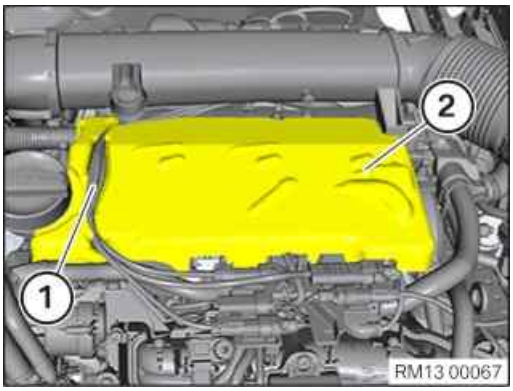

Engine: B37

Release cable (1) from sound insulation (2).

Remove sound insulation (2) upwards.

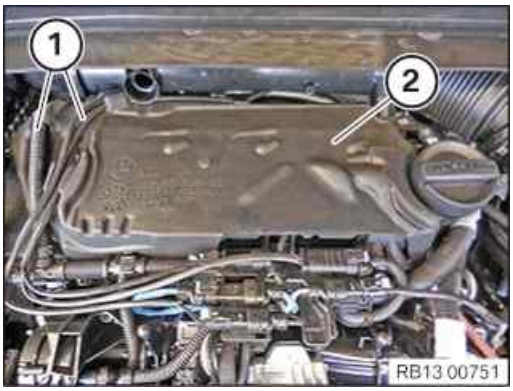

Engine: B47

Release cable (1) from sound insulation (2).

Remove sound insulation (2) upwards.

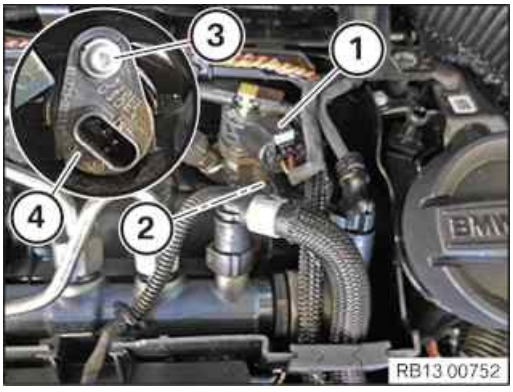

Detach the connector (1) from injector for cylinder 4.

Unlock plug (2) from pulse generator and detach.

Release screw (3).

Remove pulse sensor (4).

Installation:

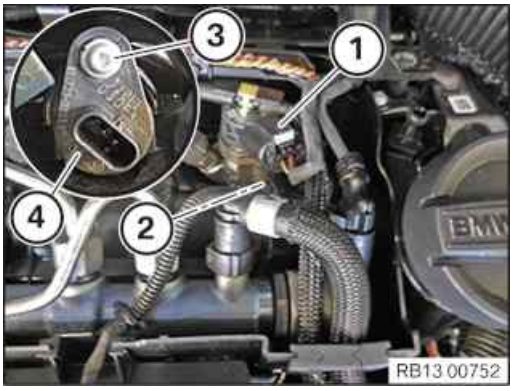

Install pulse sensor (4).

Tighten screw (3).

Tightening torque 13 62 1AZ.

Attach connector (2) on pulse sensor.

Connector (2) must snap audibly into place.

Attach connector (1) to injector of cylinder 4.

Connector (1) must engage audibly.

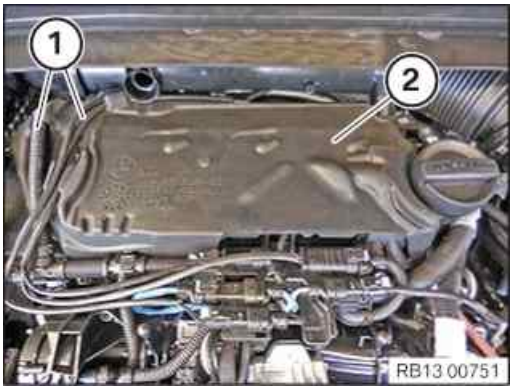

Engine: B47

Install sound insulation (2).

Secure cable (1) to sound insulation (2).

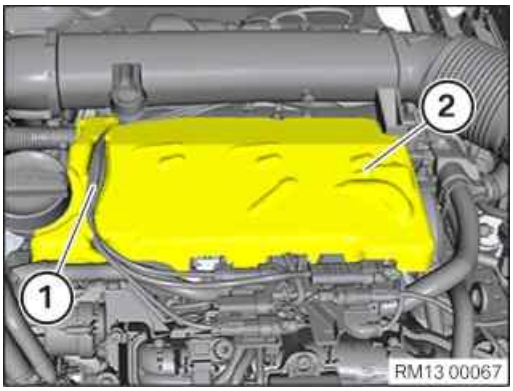

Engine: B37

Install sound insulation (2).

Secure cable (1) to sound insulation (2).

Required follow-up work:

- Install resonator.

13 62 534 Replacing the exhaust temperature sensor for diesel particulate filter

WARNING

Hot surfaces.

Risk of burning!

- Perform all work only on components that have cooled down.

PRELIMINARY WORK

1 – Remove the seal for the rear bonnet

NOTICE

Schematic diagram is for example purposes. Some parts may differ in certain details.

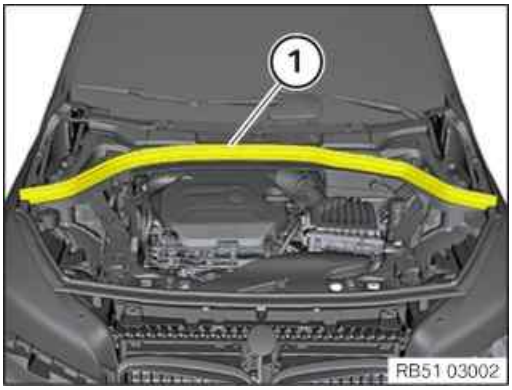

- Pull off rear bonnet seal (1) towards the top and remove.

2 – Removing front cowl panel cover

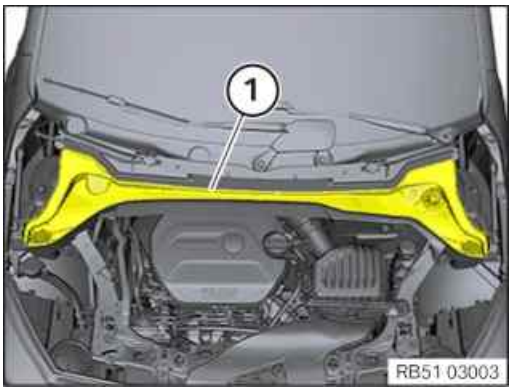

- Guide the front cowl panel cover (1) out toward the top and remove it.

3 – Remove left and right wiper arm

NOTICE

Description is for left component only. Procedure on the right side is identical.

▸ **Remove the wiper arm**

RISK OF DAMAGE

Damage to wiper console

While removing the wiper arms without using special tool, the wiper console can break.

- Removing the wiper arms must be carried out only using the prescribed special tool.
- Do not lift off wiper arm, else the wiper console may break on the predetermined breaking point for the pedestrian protection.

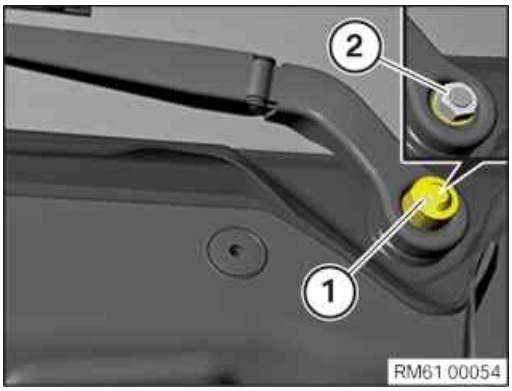

- Remove the protective cap (1).
- Loosen nut (2).

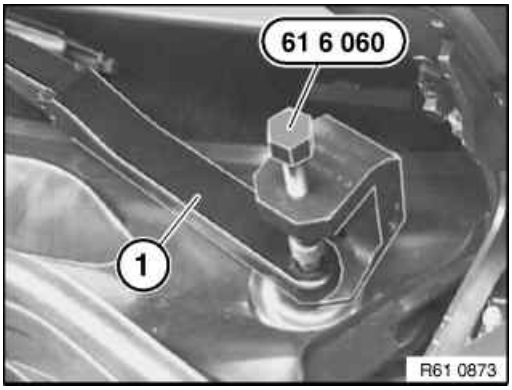

- Pull off the wiper arm (1) using special tool .

4 – Remove the gutter strip on the windscreen on the left and right

NOTICE

Description is for left component only. Procedure on the right side is identical.

▶ **Remove the gutter strip on the windscreen**

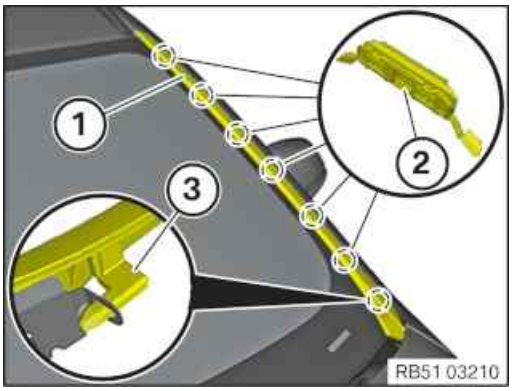

- Unclip the gutter strip (1) from the clips (2) beginning at the roof to the top.
- Feed the gutter strip (1) out of the guide (3).

5 – Remove the rear cowl panel cover

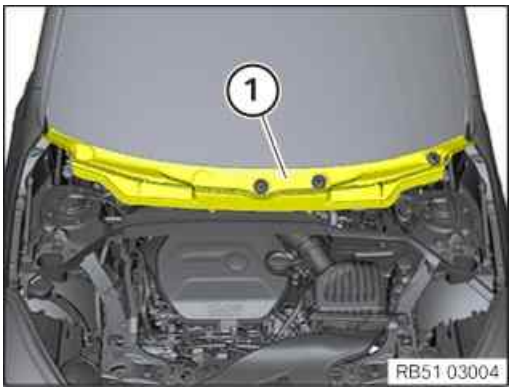

- Disengage and guide out the rear cowl panel cover (1) towards the top.

6 – Removing the upper bulkhead cover

- Loosen screws (1).

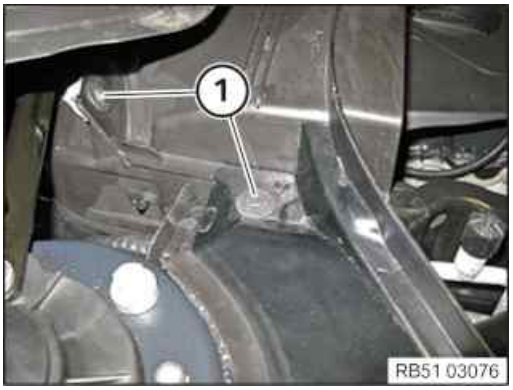

- Loosen screws (1).

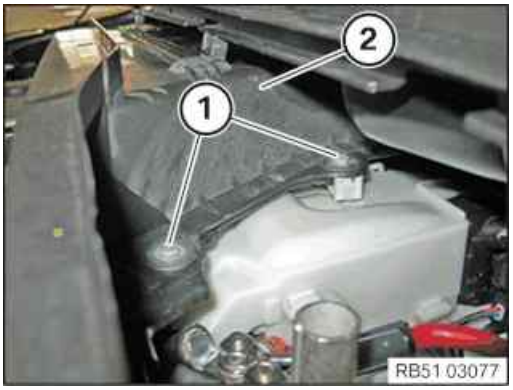

- Loosen screws (1).
- Feed out and remove the upper bulkhead cover (2).

7 – Removing the acoustic cover

WARNING

Hot surfaces.

Risk of burning!

- Perform all work only on components that have cooled down.

RISK OF DAMAGE

Damage to the acoustic cover.

Jerky movements during disassembly and excessive application of force during installation may result in breakage of the acoustic cover.

- Disassemble or mount the acoustic cover carefully.
- Disassemble or mount snap-lock couplings of the ball pivots one after the other.
- Disassemble or mount acoustic cover only at temperatures >20 °C.
- Use only distilled water as an auxiliary material during installation, no lubricants.

- Unclip the acoustic cover from the marked areas towards the top.

8 – Remove resonator

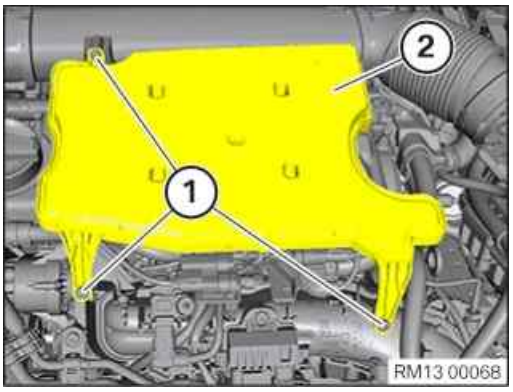

- Loosen screws (1).
- Guide out and remove the resonator (2).

9 – Removing the front underbody protection

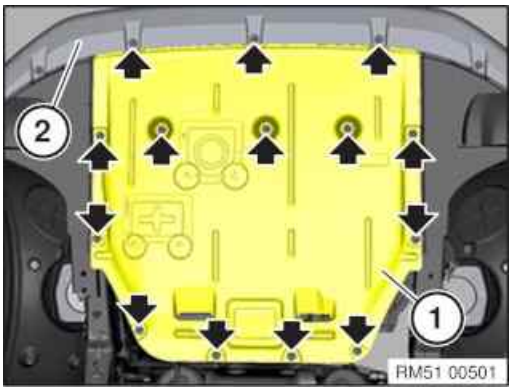

- Remove screws (arrows).
- Pull out and remove front underbody protection (1) under the bumper panel (2).

10 – Partially detach the clean air pipe

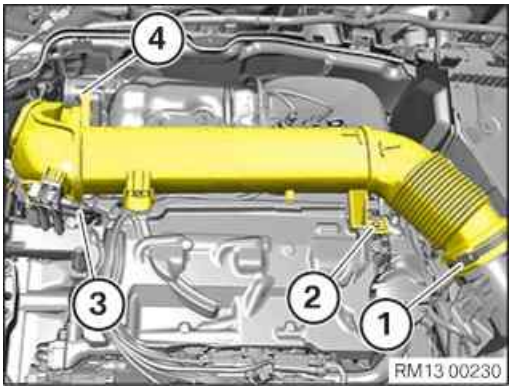

- Release the screw clamp (1).
- Loosen screw (2).
- Unlock and loosen connector (3).
- Loosen screw (4).

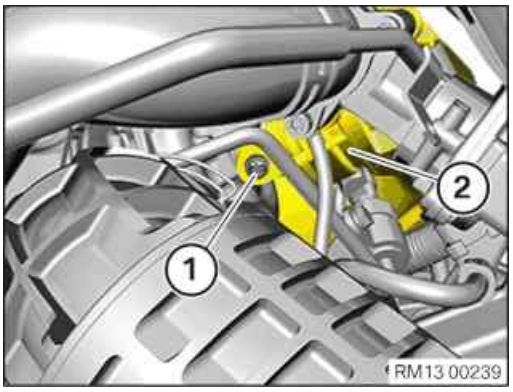

- Unscrew the screw (1) from the clean air pipe (2).

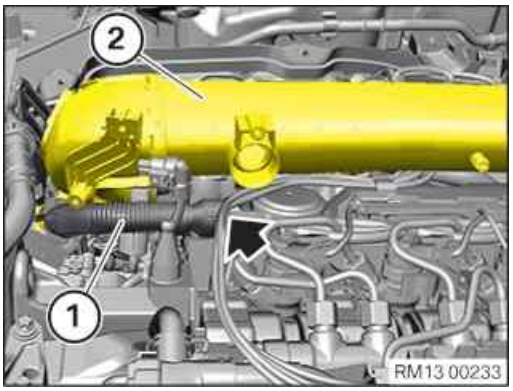

- Detach ventilation line (1) from clean air pipe (2) and set it aside.
- Detach ventilation line (1) from cylinder head cover (arrow).
- Remove the ventilation line (1).

- Thread out the clean air pipe (1) and set it aside as shown.

MAIN WORK

11 – Remove the exhaust temperature sensor on the diesel particulate filter

WARNING

Hot surfaces.

Risk of burning!

- Perform all work only on components that have cooled down.

RISK OF DAMAGE

Electrostatic discharge.

Damage to or destruction of electrical components.

- Leave electrical components in original packaging until just before they are installed. Use the original packaging only for any return shipments. Always package removed components straight away.
- Read and comply with user information on using the associated special tool 12 7 060.
- Only touch the housings of electrical components. Do not touch pins or multi-pin connectors directly.
- Wear electrically conductive clothing and antistatic shoes (with ESD symbol).
- For additional information see: 61 35 Information on electrostatic discharge (ESD) protection.

- Unlock and disconnect the plug connection (1).
- Feed out the cable (2) of the exhaust temperature sensor from the clamps (arrows) and remove.

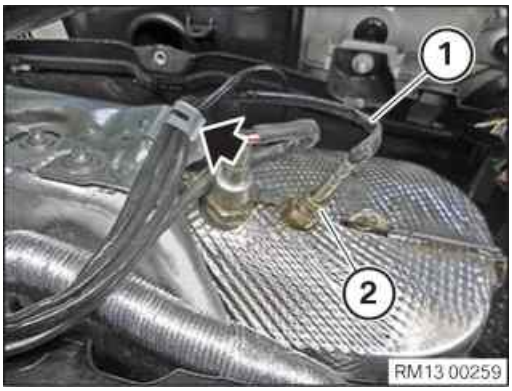

- Guide cable (1) of the exhaust temperature sensor out of the clamp (arrow) and remove it.
- Loosen exhaust temperature sensor (2).
- Feed out and remove exhaust temperature sensor (2).

12 – Install the exhaust-gas temperature sensor on the diesel particulate filter

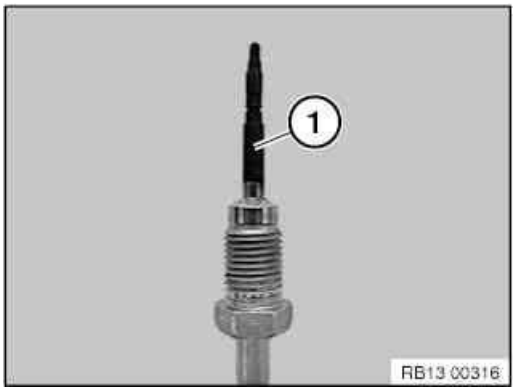

RISK OF DAMAGE

Damage of exhaust temperature sensor.

Damage to exhaust temperature sensors leads to malfunctions.

- Make sure that the gauge tip is not damaged.

- Check the gauge tip (1) for damage and renew the exhaust temperature sensor as needed.

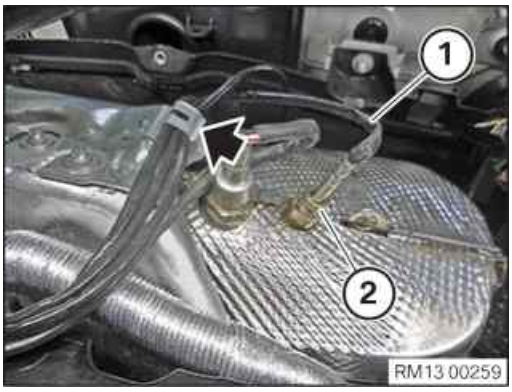

- Feed in and install the exhaust temperature sensor (2).
- Tighten the exhaust temperature sensor (2).

Exhaust temperature sensor to diesel particulate filter

Exhaust-gas temperature sensor		Tightening torque	28 Nm

- Insert and install cable (1) of the exhaust temperature sensor in the clamp (arrow).

- Insert and install the cable (2) of the exhaust temperature sensor in the clamps (arrows).
- Connect and lock the connector (1).

  The connector (1) must engage audibly.

POSTPROCESSES

13 – Partially securing clean air pipe

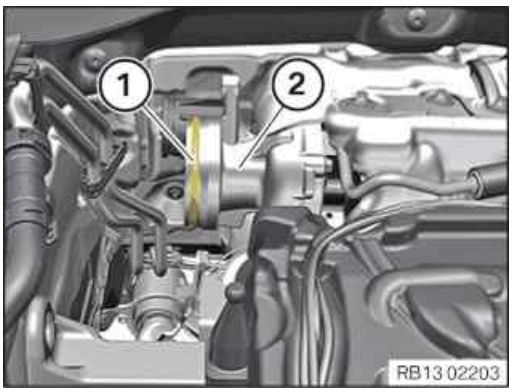

- Check the sealing ring (1) of the exhaust turbocharger (2) for damage and renew it if necessary.

- Feed in clean air pipe (1) and install.

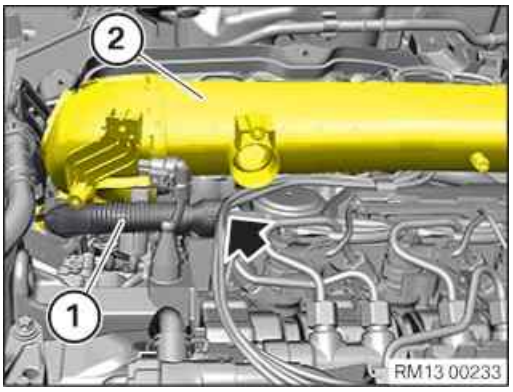

- Feed in ventilation line (1) at clean air pipe (2) and install.
- Feed in ventilation line (1) at cylinder head cover (arrow) and install.

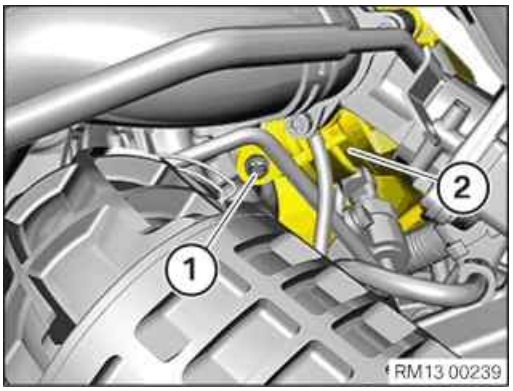

- Tighten screw (1) from clean air pipe (2).

Clean air pipe to exhaust turbocharger

Torx bolt BM8x25		Tightening torque	8 Nm

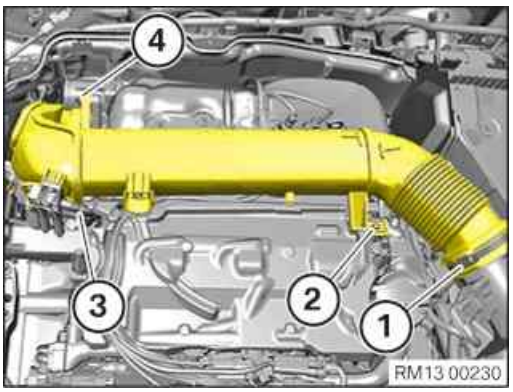

- Tighten down screw (4).

Clean air pipe to exhaust turbocharger

Torx bolt BM8x25		Tightening torque	8 Nm

- Connect and lock the connector (3).

  The connector (3) must engage audibly.
- Renew the screw (2).

  Parts: Screw
- Tighten down screw (2).

Clean air pipe to cylinder head cover

Oval-head screw	Renew screw.	Tightening torque	8 Nm

- Tighten the screw clamp (1).

Clean air pipe to intake silencer housing

Clamp		Tightening torque	3 Nm

14 – Installing the front underbody protection

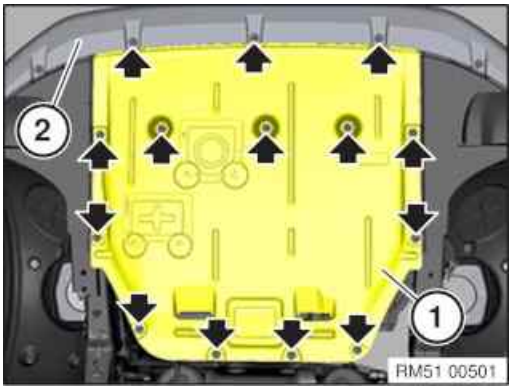

- Guide the front underbody protection (1) in under the bumper panel (2) and position it at the screw points.
- Tighten screws (arrows).

Underbody protection front

			3 Nm

15 – Install resonator

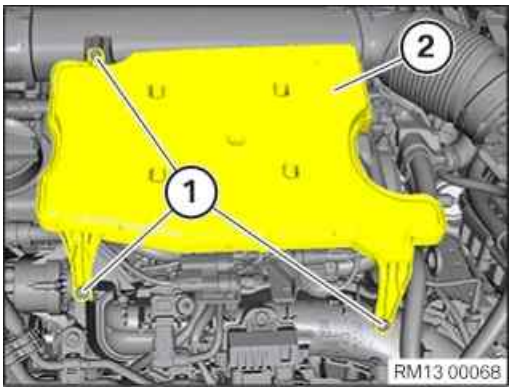

- Insert and install the resonator (2).
- Renew screws (1).

  Parts: Bolts
- Tighten the screws (1).

Resonator to manifold and clean air pipe

Screw TS6	Renew screw.	Tightening torque	5 Nm

16 – Install acoustic cover

RISK OF DAMAGE

Damage to the acoustic cover.

Jerky movements during disassembly and excessive application of force during installation may result in breakage of the acoustic cover.

- Disassemble or mount the acoustic cover carefully.
- Disassemble or mount snap-lock couplings of the ball pivots one after the other.
- Disassemble or mount acoustic cover only at temperatures >20 °C.
- Use only distilled water as an auxiliary material during installation, no lubricants.

- Check for correct installation of all rubber mounts in the acoustic cover (1).

- Clip in the acoustic cover into the holders in the indicated areas.
- Make sure that the acoustic cover engages audibly.

17 – Installing the upper bulkhead cover

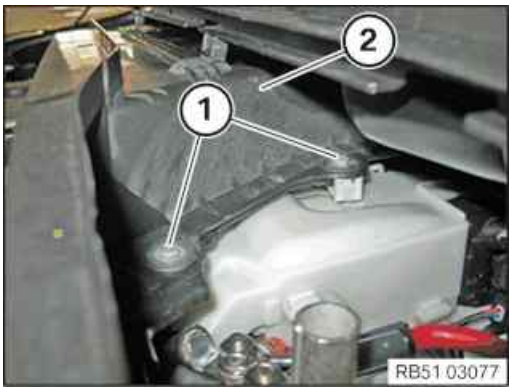

- Feed in and install cover (2) of the bulkhead at the top.
- Tighten the screws (1).

Bulkhead cover, top

Screw		Tightening torque	3 Nm

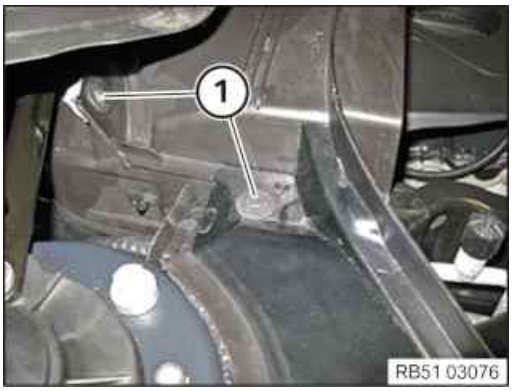

- Tighten the screws (1).

Bulkhead cover, top

Screw		Tightening torque	3 Nm

- Tighten the screws (1).

Bulkhead cover, top

Screw		Tightening torque	3 Nm

18 – Install the rear cowl panel cover

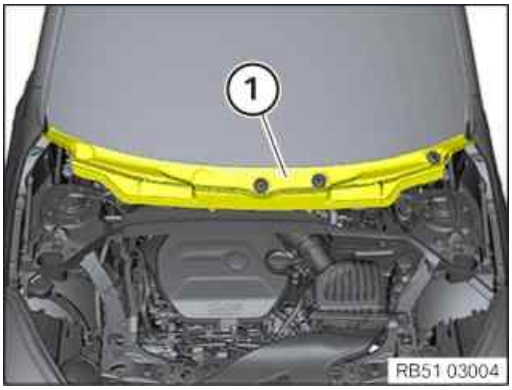

- Feed in and engage the rear cowl panel cover (1).

19 – Install the gutter strip on the windscreen on the left and right

NOTICE

Description is for left component only. Procedure on the right side is identical.

▸ **Install the gutter strip on the windscreen**

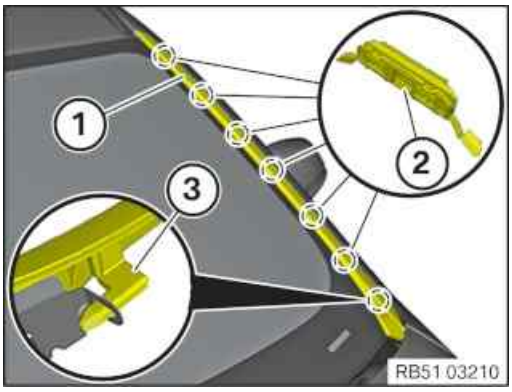

- Check the clamps (2) for damage and renew if necessary.
- Insert the gutter strip (1) with the guide (3).
- Align the gutter strip (1) at the roof and clip it in.

20 – Install left and right wiper arm

NOTICE

Description is for left component only. Procedure on the right side is identical.

▶ **Install the wiper arm**

TECHNICAL INFORMATION

The wiper system must be in zero position.
After installing the cowl panel cover and before fitting the wiper arm:
Activate the wiper system once to ensure that it has the correct installation position.

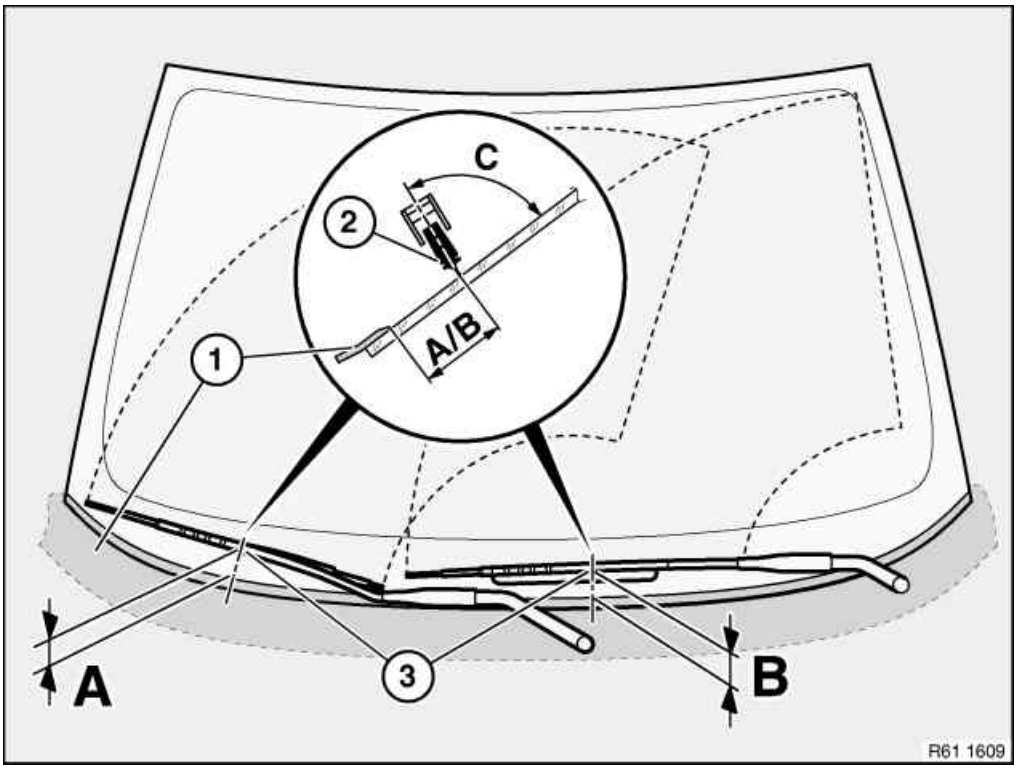

- Connect the wiper arm (3).
- Correctly position the wiper arm (2) in relation to the window edge (1).

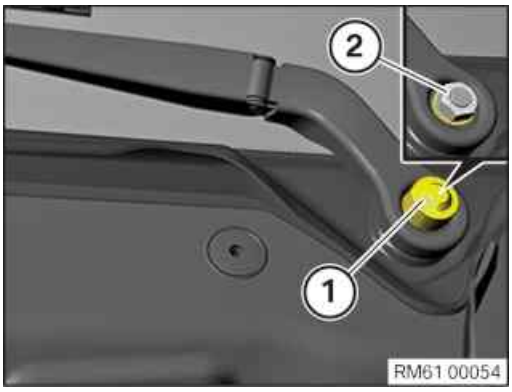

NOTICE

Description is for left component only. Procedure on the right side is identical.

- Tighten nut (2).

Windscreen wiper arm

Combination hexagon nut		Tightening torque	35 Nm

- Connect the protective cap (1).

21 – Installing front cowl panel cover

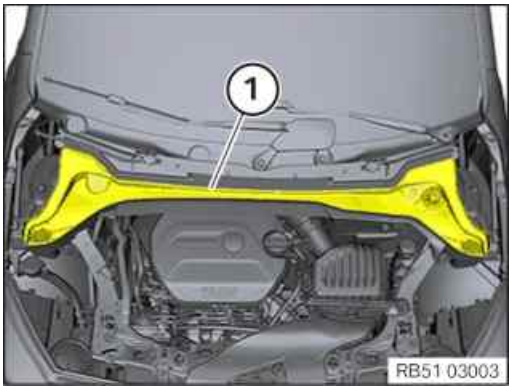

- Insert the cowl panel cover front (1) to the rear and install.
- Check cowl panel cover at front is correctly seated (1).

22 – Install the seal for the bonnet

NOTICE

Schematic diagram is for example purposes. Some parts may differ in certain details.

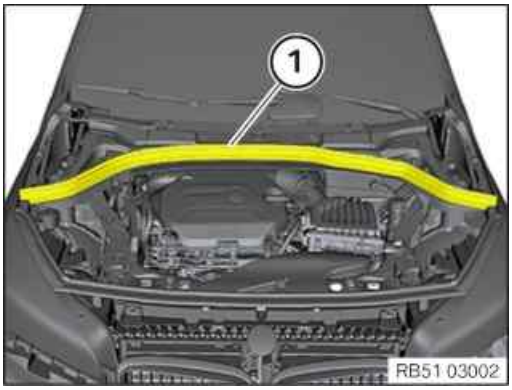

- Install bonnet seal at rear (1).
- Ensure that the rear bonnet seal (1) is fitted correctly.

Additional Information

Overview of Tightening Torques

Exhaust temperature sensor to diesel particulate filter Used in step 12

Exhaust-gas temperature sensor		Tightening torque	28 Nm

Clean air pipe to exhaust turbocharger Used in step 13

Torx bolt BM8x25		Tightening torque	8 Nm

Clean air pipe to cylinder head cover Used in step 13

Oval-head screw	Renew screw.	Tightening torque	8 Nm

Clean air pipe to intake silencer housing Used in step 13

Clamp		Tightening torque	3 Nm

Underbody protection front Used in step 14

			3 Nm

Resonator to manifold and clean air pipe Used in step 15

Screw TS6	Renew screw.	Tightening torque	5 Nm

Bulkhead cover, top Used in step 17

Screw		Tightening torque	3 Nm

Windscreen wiper arm Used in step 20

Combination hexagon nut		Tightening torque	35 Nm

Overview of Special Tools

Overview Technical Data

Links

Repair instructions	Used in step
61 35 ... Notes on ESD protection (Electro Static Discharge)	11

13 62 663 Replacing the exhaust temperature sensor for the exhaust system after the catalytic converter on the diesel particulate filter

WARNING

Hot surfaces.

Risk of burning!

- Perform all work only on components that have cooled down.

PRELIMINARY WORK

1 – Remove the seal for the rear bonnet

NOTICE

Schematic diagram is for example purposes. Some parts may differ in certain details.

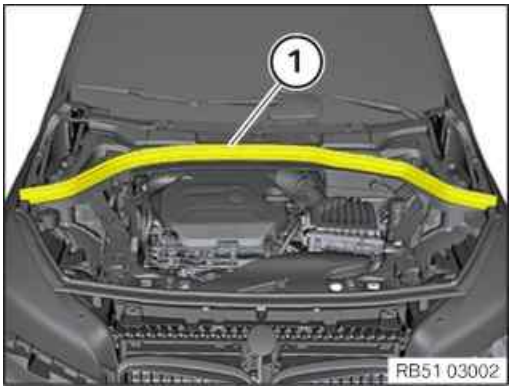

- Pull off rear bonnet seal (1) towards the top and remove.

2 – Removing front cowl panel cover

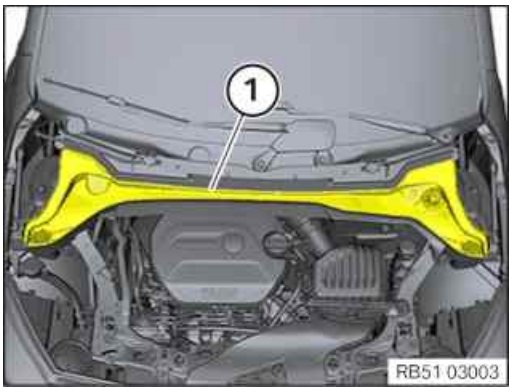

- Guide the front cowl panel cover (1) out toward the top and remove it.

3 – Remove left and right wiper arm

NOTICE

Description is for left component only. Procedure on the right side is identical.

▶ **Remove the wiper arm**

RISK OF DAMAGE

Damage to wiper console

While removing the wiper arms without using special tool, the wiper console can break.

- Removing the wiper arms must be carried out only using the prescribed special tool.
- Do not lift off wiper arm, else the wiper console may break on the predetermined breaking point for the pedestrian protection.

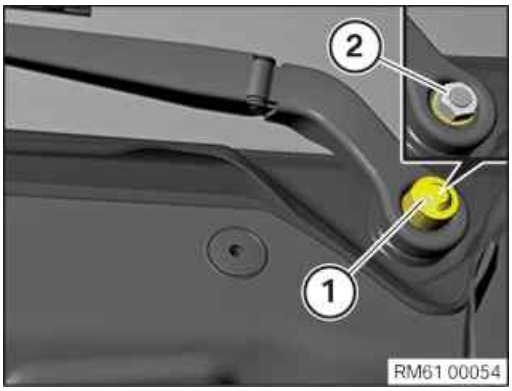

- Remove the protective cap (1).
- Loosen nut (2).

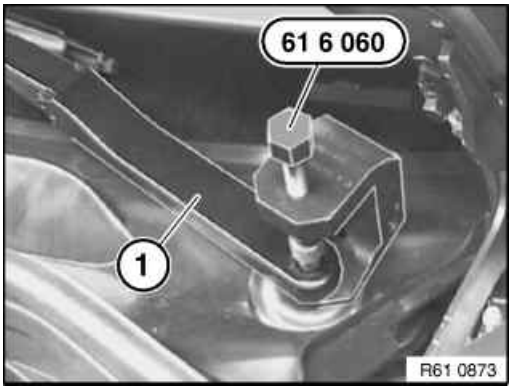

- Pull off the wiper arm (1) using special tool .

4 – Remove the gutter strip on the windscreen on the left and right

NOTICE

Description is for left component only. Procedure on the right side is identical.

▶ **Remove the gutter strip on the windscreen**

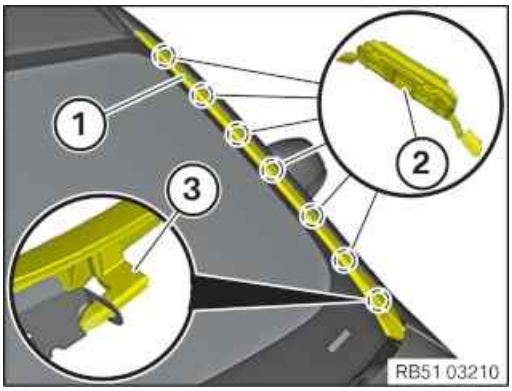

- Unclip the gutter strip (1) from the clips (2) beginning at the roof to the top.
- Feed the gutter strip (1) out of the guide (3).

5 – Remove the rear cowl panel cover

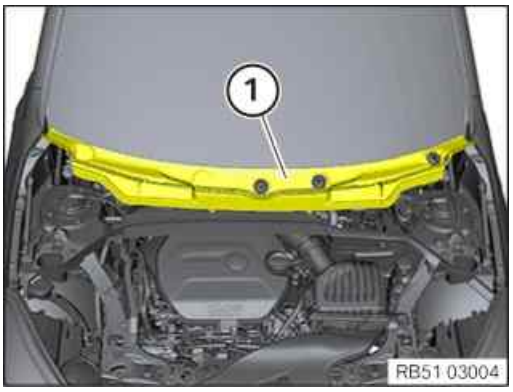

- Disengage and guide out the rear cowl panel cover (1) towards the top.

6 – Removing the upper bulkhead cover

- Loosen screws (1).

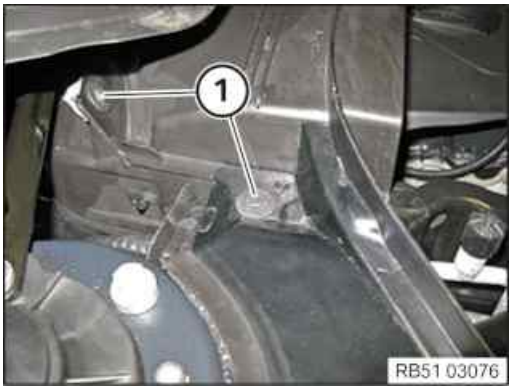

- Loosen screws (1).

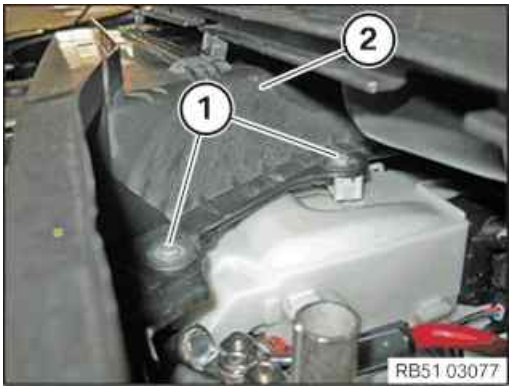

- Loosen screws (1).
- Feed out and remove the upper bulkhead cover (2).

7 – Removing the acoustic cover

WARNING

Hot surfaces.

Risk of burning!

- Perform all work only on components that have cooled down.

RISK OF DAMAGE

Damage to the acoustic cover.

Jerky movements during disassembly and excessive application of force during installation may result in breakage of the acoustic cover.

- Disassemble or mount the acoustic cover carefully.
- Disassemble or mount snap-lock couplings of the ball pivots one after the other.
- Disassemble or mount acoustic cover only at temperatures >20 °C.
- Use only distilled water as an auxiliary material during installation, no lubricants.

- Unclip the acoustic cover from the marked areas towards the top.

8 – Remove resonator

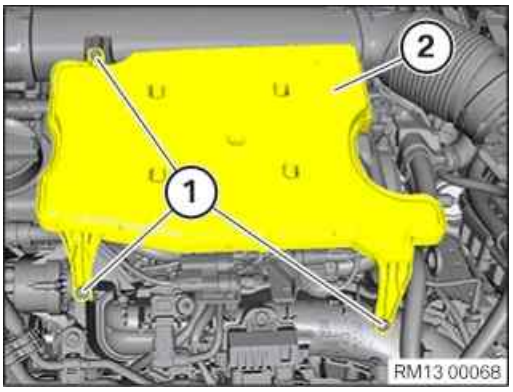

- Loosen screws (1).
- Guide out and remove the resonator (2).

9 – Removing the front underbody protection

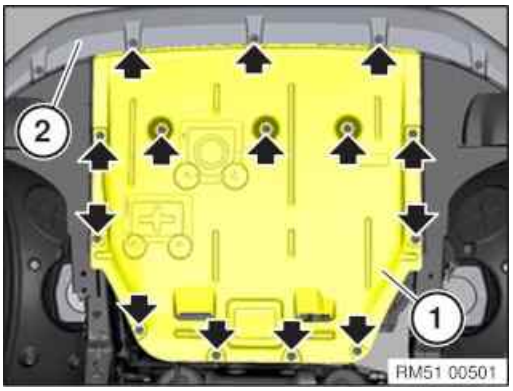

- Remove screws (arrows).
- Pull out and remove front underbody protection (1) under the bumper panel (2).

10 – Partially detach the clean air pipe

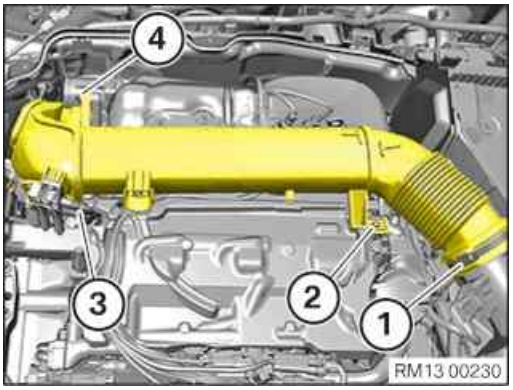

- Release the screw clamp (1).
- Loosen screw (2).
- Unlock and loosen connector (3).
- Loosen screw (4).

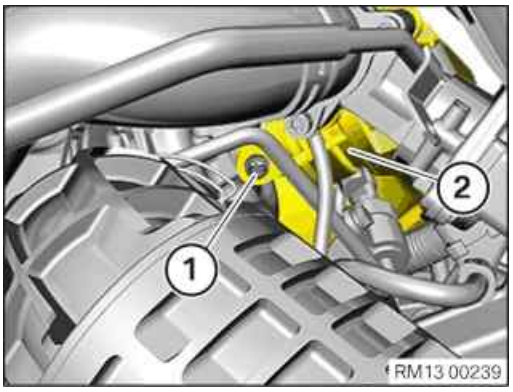

- Unscrew the screw (1) from the clean air pipe (2).

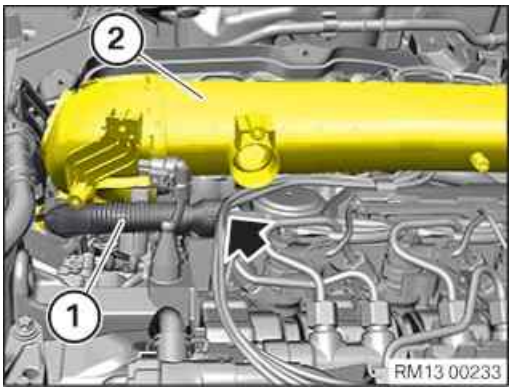

- Detach ventilation line (1) from clean air pipe (2) and set it aside.
- Detach ventilation line (1) from cylinder head cover (arrow).
- Remove the ventilation line (1).

- Thread out the clean air pipe (1) and set it aside as shown.

11 – Remove the rear bulkhead upper part

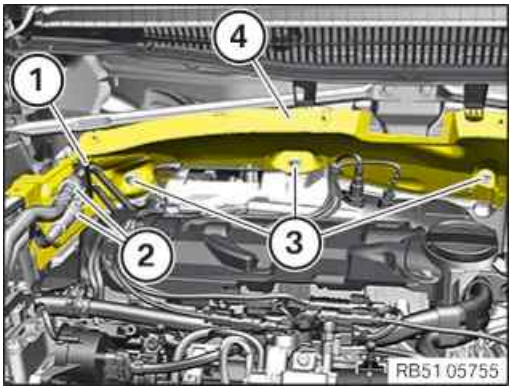

- Unlock the holder (1) and disconnect.
- Guide out and remove the fuel lines (2).
- Loosen screws (3).
- Guide out the rear bulkhead upper part (4) and remove.

MAIN WORK

12 – Removing the exhaust temperature sensor downstream from the catalytic converter on the diesel particulate filter

WARNING

Hot surfaces.

Risk of burning!

- Perform all work only on components that have cooled down.

RISK OF DAMAGE

Electrostatic discharge.

Damage to or destruction of electrical components.

- Leave electrical components in original packaging until just before they are installed. Use the original packaging only for any return shipments. Always package removed components straight away.
- Read and comply with user information on using the associated special tool 12 7 060.
- Only touch the housings of electrical components. Do not touch pins or multi-pin connectors directly.
- Wear electrically conductive clothing and antistatic shoes (with ESD symbol).
- For additional information see: 61 35 Information on electrostatic discharge (ESD) protection.

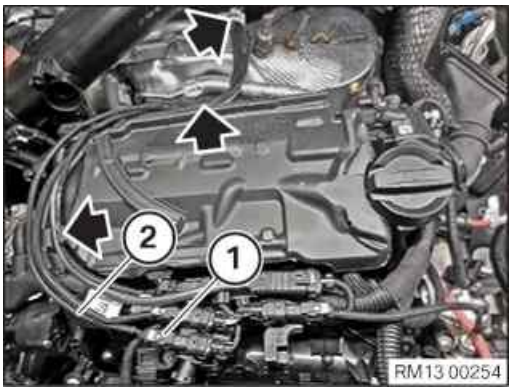

- Unlock and disconnect the plug connection (1).
- Feed the cable (2) from the temperature sensor out of the clamps (arrows) and remove it.

- Release the exhaust temperature sensor (1) with conventional tools (2).

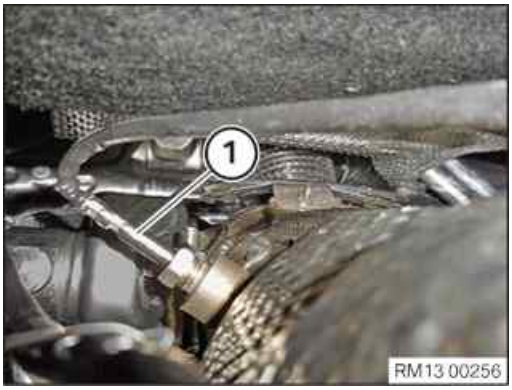

- Feed out and remove exhaust temperature sensor (1).

13 – Installing the exhaust temperature sensor downstream from the catalytic converter on the diesel particulate filter

RISK OF DAMAGE

Damage of exhaust temperature sensor.

Damage to exhaust temperature sensors leads to malfunctions.

- Make sure that the gauge tip is not damaged.

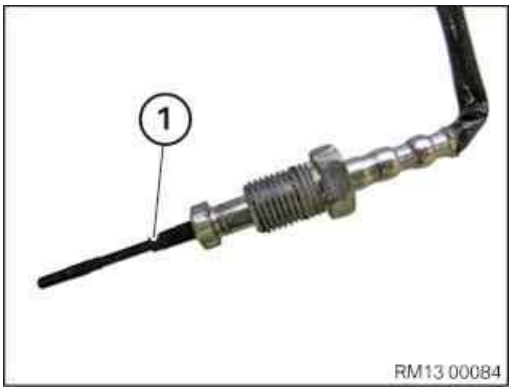

- Make sure the gauge tip (1) is not damaged during installation.

- Feed in and install the exhaust temperature sensor (1).

- Tighten the exhaust temperature sensor (1) with conventional tools (2).

Exhaust temperature sensor to diesel particulate filter

Exhaust-gas temperature sensor		Tightening torque	28 Nm

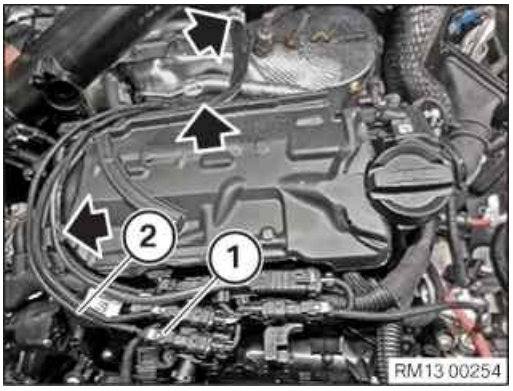

- Insert and install the cable (2) of the exhaust temperature sensor in the clamps (arrows).
- Connect and lock the connector (1).

  The connector (1) must engage audibly.

POSTPROCESSES

14 – Installing rear bulkhead upper part

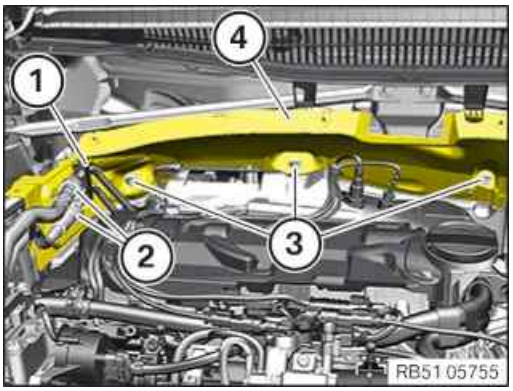

- Feed in and install the rear bulkhead upper part (4).
- Tighten down screws (3).

Rear bulkhead upper part to lower section of bulkhead

Oval-head screw		Tightening torque	5 Nm

- Feed the fuel line (2) into the holder (1) and install.
- Connect and lock the holder (1).

  The holder (1) must engage audibly.

15 – Partially securing clean air pipe

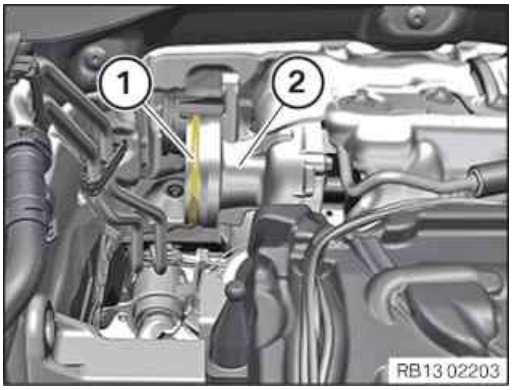

- Check the sealing ring (1) of the exhaust turbocharger (2) for damage and renew it if necessary.

- Feed in clean air pipe (1) and install.

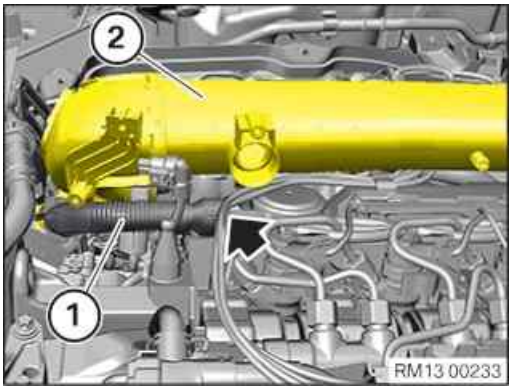

- Feed in ventilation line (1) at clean air pipe (2) and install.
- Feed in ventilation line (1) at cylinder head cover (arrow) and install.

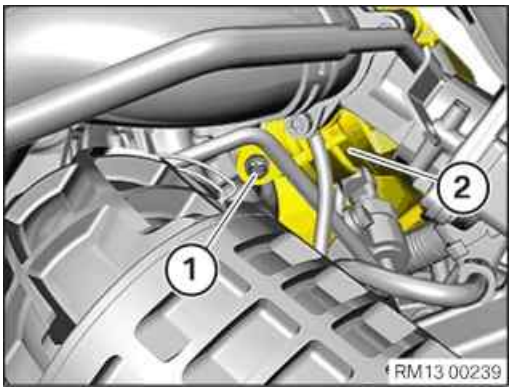

- Tighten screw (1) from clean air pipe (2).

Clean air pipe to exhaust turbocharger

Torx bolt BM8x25		Tightening torque	8 Nm

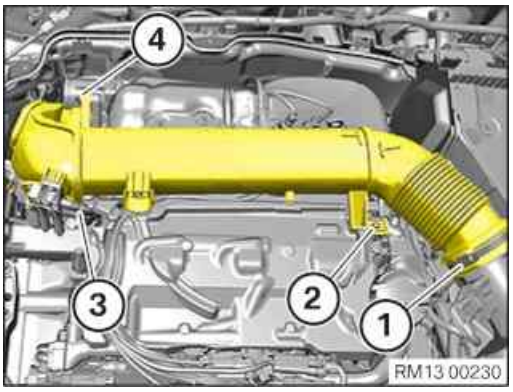

- Tighten down screw (4).

Clean air pipe to exhaust turbocharger

Torx bolt BM8x25		Tightening torque	8 Nm

- Connect and lock the connector (3).

  The connector (3) must engage audibly.
- Renew the screw (2).

  Parts: Screw
- Tighten down screw (2).

Clean air pipe to cylinder head cover

Oval-head screw	Renew screw.	Tightening torque	8 Nm

- Tighten the screw clamp (1).

Clean air pipe to intake silencer housing

Clamp		Tightening torque	3 Nm

16 – Installing the front underbody protection

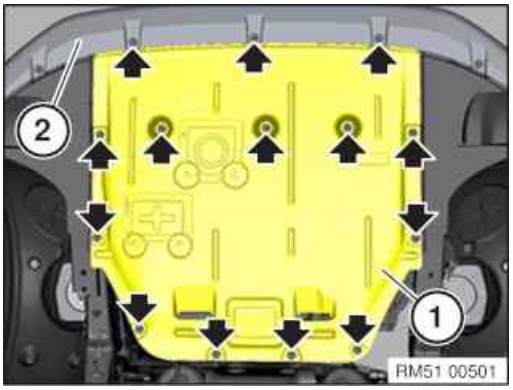

- Guide the front underbody protection (1) in under the bumper panel (2) and position it at the screw points.
- Tighten screws (arrows).

Underbody protection front

			3 Nm

17 – Install resonator

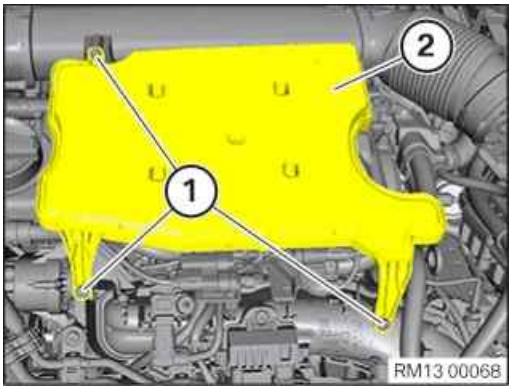

- Insert and install the resonator (2).
- Renew screws (1).

  Parts: Bolts
- Tighten the screws (1).

Resonator to manifold and clean air pipe

Screw TS6	Renew screw.	Tightening torque	5 Nm

18 – Install acoustic cover

RISK OF DAMAGE

Damage to the acoustic cover.

Jerky movements during disassembly and excessive application of force during installation may result in breakage of the acoustic cover.

- Disassemble or mount the acoustic cover carefully.
- Disassemble or mount snap-lock couplings of the ball pivots one after the other.
- Disassemble or mount acoustic cover only at temperatures >20 °C.
- Use only distilled water as an auxiliary material during installation, no lubricants.

- Check for correct installation of all rubber mounts in the acoustic cover (1).

- Clip in the acoustic cover into the holders in the indicated areas.
- Make sure that the acoustic cover engages audibly.

19 – Installing the upper bulkhead cover

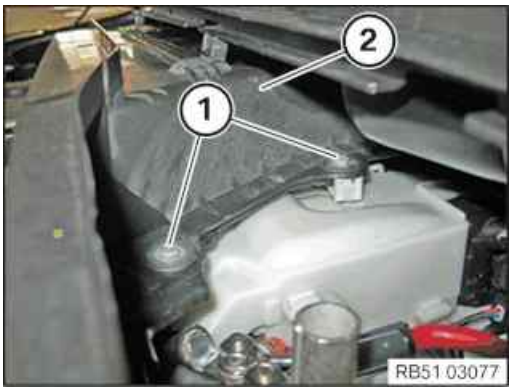

- Feed in and install cover (2) of the bulkhead at the top.
- Tighten the screws (1).

Bulkhead cover, top

Screw		Tightening torque	3 Nm

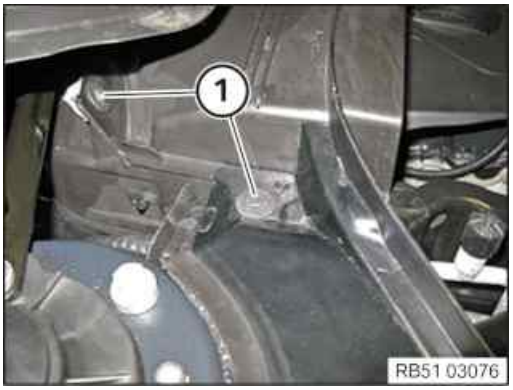

- Tighten the screws (1).

Bulkhead cover, top

Screw		Tightening torque	3 Nm

- Tighten the screws (1).

Bulkhead cover, top

Screw		Tightening torque	3 Nm

20 – Install the rear cowl panel cover

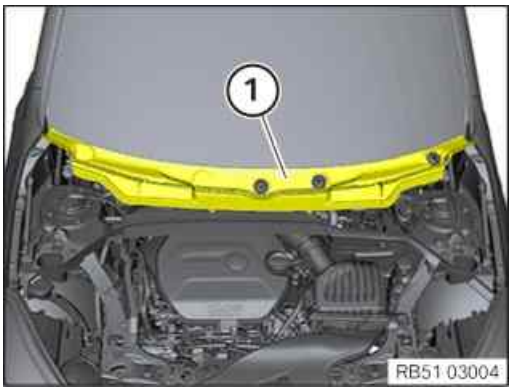

- Feed in and engage the rear cowl panel cover (1).

21 – Install the gutter strip on the windscreen on the left and right

NOTICE

Description is for left component only. Procedure on the right side is identical.

▸ **Install the gutter strip on the windscreen**

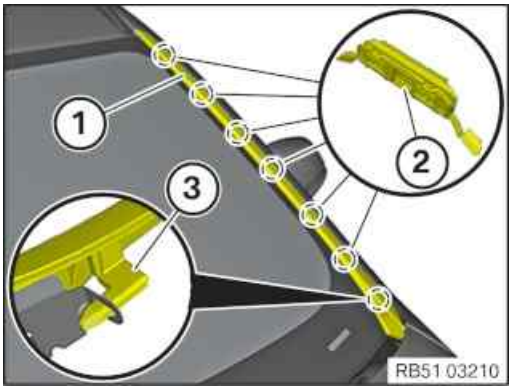

- Check the clamps (2) for damage and renew if necessary.
- Insert the gutter strip (1) with the guide (3).
- Align the gutter strip (1) at the roof and clip it in.

22 – Install left and right wiper arm

NOTICE

Description is for left component only. Procedure on the right side is identical.

▸ **Install the wiper arm**

TECHNICAL INFORMATION

The wiper system must be in zero position.
After installing the cowl panel cover and before fitting the wiper arm:
Activate the wiper system once to ensure that it has the correct installation position.

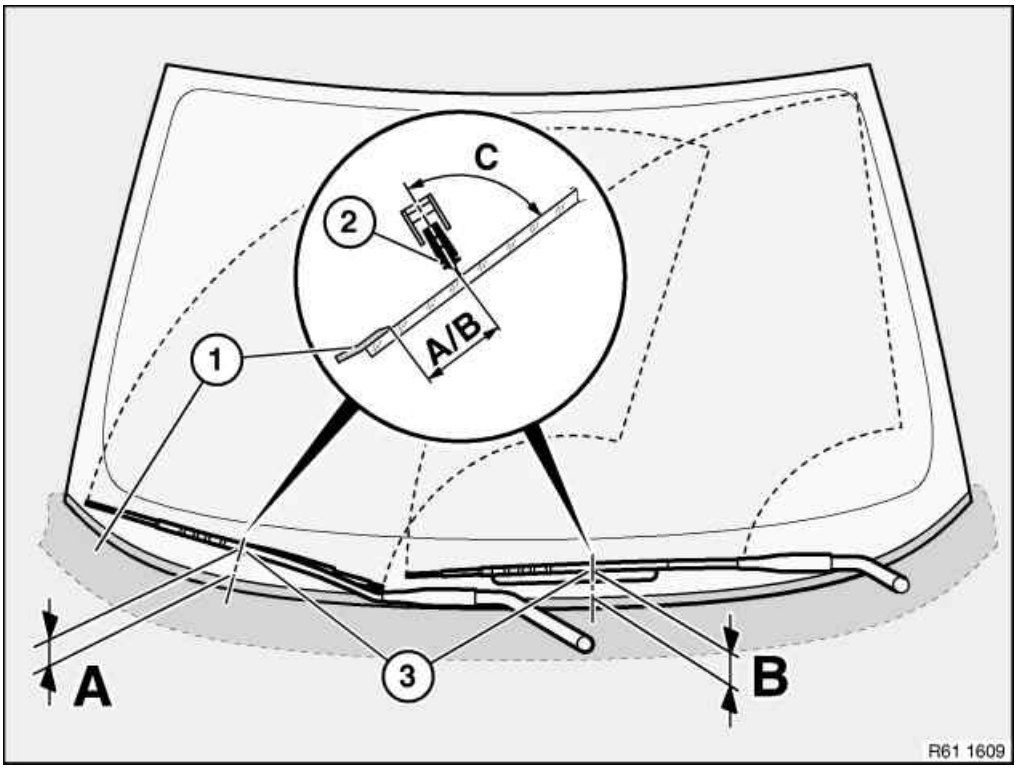

- Connect the wiper arm (3).
- Correctly position the wiper arm (2) in relation to the window edge (1).

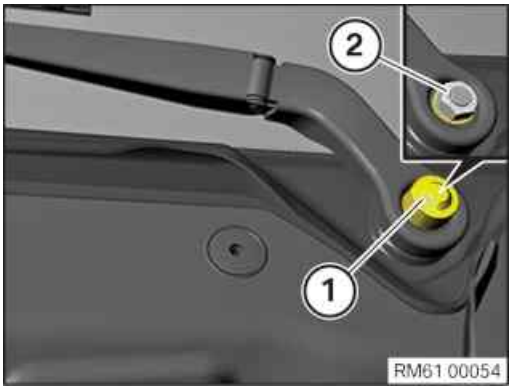

NOTICE

Description is for left component only. Procedure on the right side is identical.

- Tighten nut (2).

Windscreen wiper arm

Combination hexagon nut		Tightening torque	35 Nm

- Connect the protective cap (1).

23 – Installing front cowl panel cover

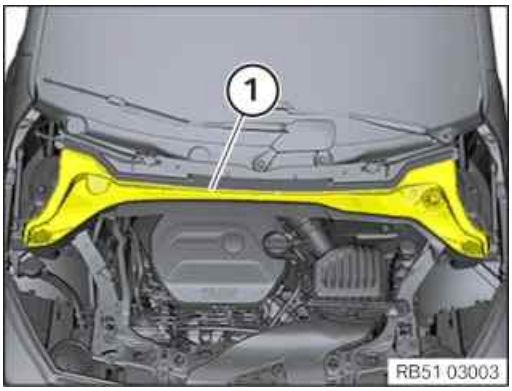

- Insert the cowl panel cover front (1) to the rear and install.
- Check cowl panel cover at front is correctly seated (1).

24 – Install the seal for the bonnet

NOTICE

Schematic diagram is for example purposes. Some parts may differ in certain details.

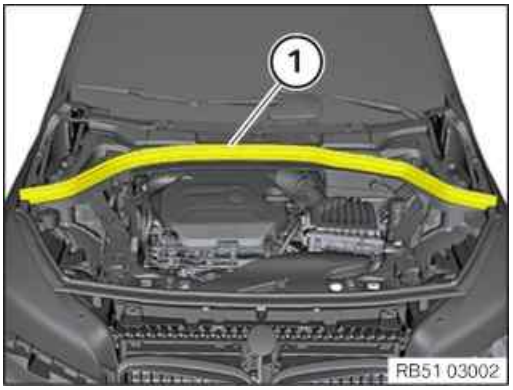

- Install bonnet seal at rear (1).
- Ensure that the rear bonnet seal (1) is fitted correctly.

Additional Information

Overview of Tightening Torques

Exhaust temperature sensor to diesel particulate filter			Used in step 13
Exhaust-gas temperature sensor		Tightening torque	28 Nm

Rear bulkhead upper part to lower section of bulkhead			Used in step 14
Oval-head screw		Tightening torque	5 Nm

Clean air pipe to exhaust turbocharger			Used in step 15
Torx bolt BM8x25		Tightening torque	8 Nm

Clean air pipe to cylinder head cover			Used in step 15
Oval-head screw	Renew screw.	Tightening torque	8 Nm

Clean air pipe to intake silencer housing			Used in step 15
Clamp		Tightening torque	3 Nm

Underbody protection front			Used in step 16
			3 Nm

Resonator to manifold and clean air pipe			Used in step 17
Screw TS6	Renew screw.	Tightening torque	5 Nm

Bulkhead cover, top			Used in step 19
Screw		Tightening torque	3 Nm

Windscreen wiper arm			Used in step 22
Combination hexagon nut		Tightening torque	35 Nm

Overview of Special Tools

Overview Technical Data

Links

Repair instructions	Used in step
61 35 ... Notes on ESD protection (Electro Static Discharge)	12

13 71 000 Remove and install intake silencer housing

WARNING

Hot surfaces.

Risk of burning!

- Perform all work only on components that have cooled down.

PRELIMINARY WORK

1 – Remove the intake neck for intake silencer housing

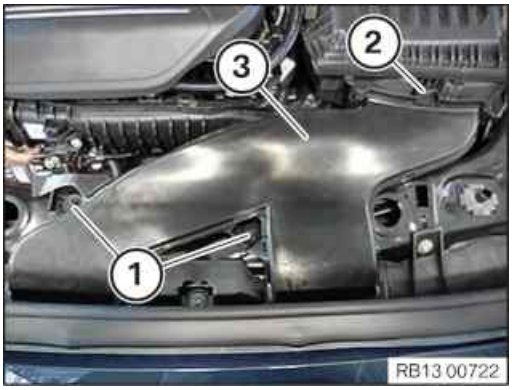

- Loosen nuts (1).
- Loosen the lock (2).
- Guide the intake neck (3) out and remove it.

2 – Removing intake silencer housing

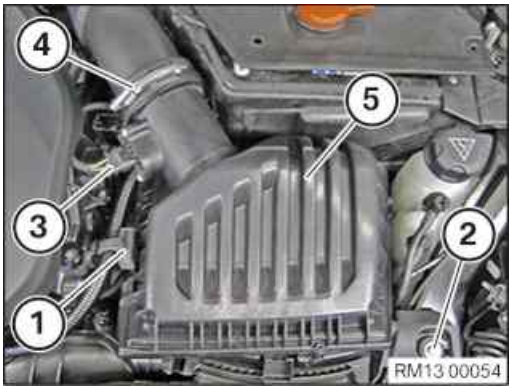

- Loosen the holder (1).
- Loosen screw (2).
- Unlock and loosen connector (3).
- Unfasten clamp (4).
- Pull out and remove the intake silencer housing (5) from the rubber mounts towards the top.

3 – Installing intake silencer housing

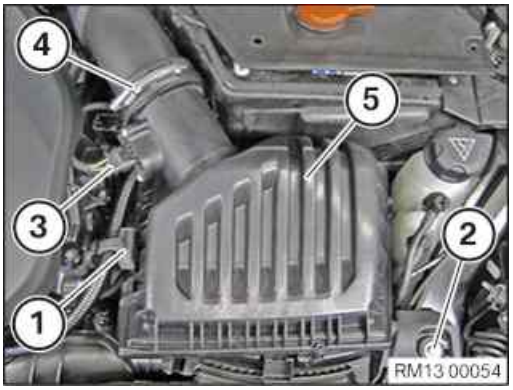

- Insert the intake silencer housing (5) into the rubber mounts and install it.

  Intake filter housing (5) must engage audibly.
- Tighten down screw (2).

Intake silencer housing to lock bridge

M6X30		Tightening torque	8 Nm

- Tighten clamp (4).

Clean air pipe to intake silencer housing

Clamp		Tightening torque	3 Nm

- Connect and lock the connector (3).

  The connector (3) must engage audibly.
- Insert and install the holder (1).

4 – Install the intake neck for the intake filter housing

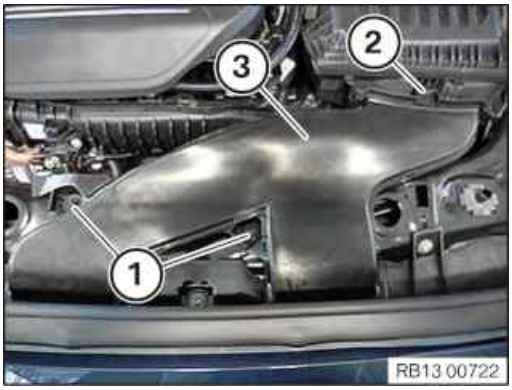

- Insert and install the intake neck (3).

  The lock (2) must audibly engage.
- Tighten nuts (1).

Intake neck to cross connection

M6		Tightening torque	8 Nm

Additional Information

Overview of Tightening Torques

Intake silencer housing to lock bridge — Used in step 3

M6X30		Tightening torque	8 Nm

Clean air pipe to intake silencer housing — Used in step 3

Clamp		Tightening torque	3 Nm

Intake neck to cross connection — Used in step 4

M6		Tightening torque	8 Nm

13 71 031 Remove intake neck for intake silencer housing

[redacted]

Removal:

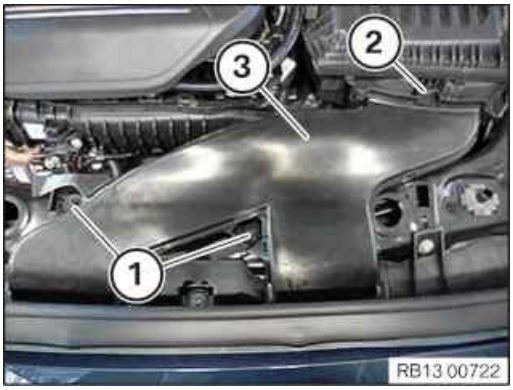

Unscrew nuts (1).
Release lock (2).
Feed out intake port (3) and remove.

[redacted]

Installation:

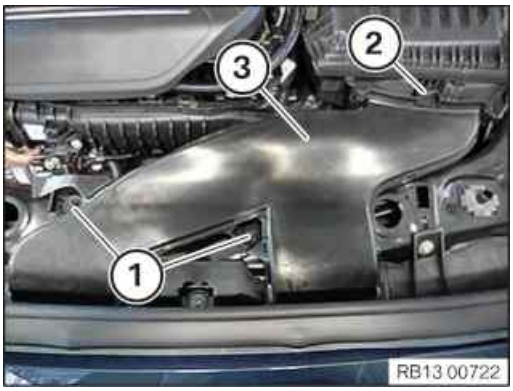

Install intake port (3).
Lock lock (2).
Tighten down nuts (1).
Tightening torque 13 71 1AZ.

13 71 196 Removing & installing/rep. resonator

PRELIMINARY WORK

1 – Removing the acoustic cover

WARNING

Hot surfaces.

Risk of burning!

- Perform all work only on components that have cooled down.

RISK OF DAMAGE

Damage to the acoustic cover.

Jerky movements during disassembly and excessive application of force during installation may result in breakage of the acoustic cover.

- Disassemble or mount the acoustic cover carefully.
- Disassemble or mount snap-lock couplings of the ball pivots one after the other.
- Disassemble or mount acoustic cover only at temperatures >20 °C.
- Use only distilled water as an auxiliary material during installation, no lubricants.

- Unclip the acoustic cover from the marked areas towards the top.

2 – Remove resonator

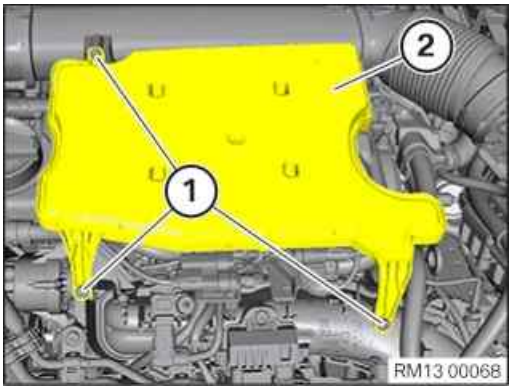

- Loosen screws (1).
- Guide out and remove the resonator (2).

3 – Install resonator

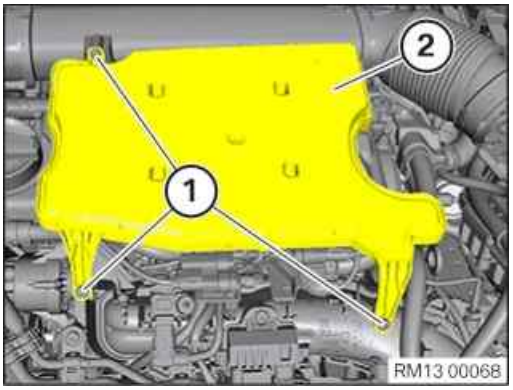

- Insert and install the resonator (2).
- Renew screws (1).

  Parts: Bolts
- Tighten the screws (1).

Resonator to manifold and clean air pipe

Screw TS6	Renew screw.	Tightening torque	5 Nm

4 – Install acoustic cover

RISK OF DAMAGE

Damage to the acoustic cover.

Jerky movements during disassembly and excessive application of force during installation may result in breakage of the acoustic cover.

- Disassemble or mount the acoustic cover carefully.
- Disassemble or mount snap-lock couplings of the ball pivots one after the other.
- Disassemble or mount acoustic cover only at temperatures >20 °C.
- Use only distilled water as an auxiliary material during installation, no lubricants.

- Check for correct installation of all rubber mounts in the acoustic cover (1).

- Clip in the acoustic cover into the holders in the indicated areas.
- Make sure that the acoustic cover engages audibly.

Additional Information

Overview of Tightening Torques

Resonator to manifold and clean air pipe Used in step 3

Screw TS6	Renew screw.	Tightening torque	5 Nm

13 71 ... Removing acoustic cover (B37)

Removal:

Pull off acoustic cover (1) upwards and remove.

Installation:

Ensure rubber mount is correctly fitted on acoustic cover.

Attach acoustic coverÂ (1) to locating pins.

13 71 035 Removing and installing/replacing clean air pipe

WARNING

Hot surfaces.

Risk of burning!

- Perform all work only on components that have cooled down.

PRELIMINARY WORK

1 – Remove the seal for the rear bonnet

NOTICE

Schematic diagram is for example purposes. Some parts may differ in certain details.

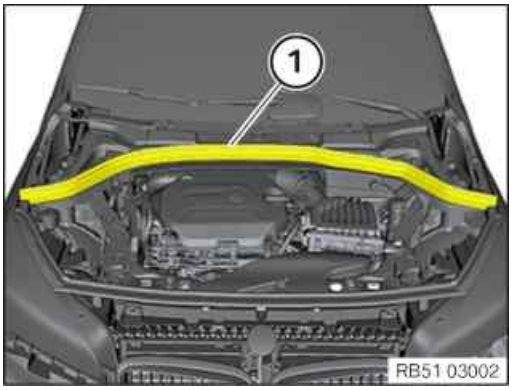

- Pull off rear bonnet seal (1) towards the top and remove.

2 – Removing front cowl panel cover

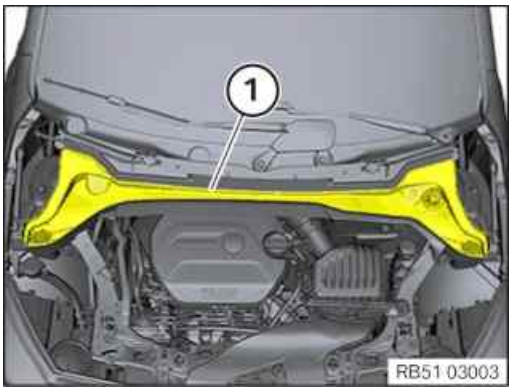

- Guide the front cowl panel cover (1) out toward the top and remove it.

3 – Remove left and right wiper arm

NOTICE

Description is for left component only. Procedure on the right side is identical.

▶ **Remove the wiper arm**

RISK OF DAMAGE

Damage to wiper console

While removing the wiper arms without using special tool, the wiper console can break.

- Removing the wiper arms must be carried out only using the prescribed special tool.
- Do not lift off wiper arm, else the wiper console may break on the predetermined breaking point for the pedestrian protection.

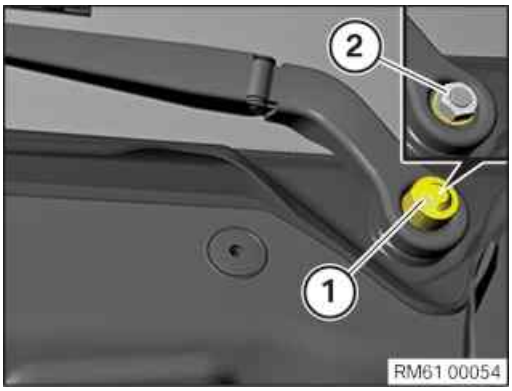

- Remove the protective cap (1).
- Loosen nut (2).

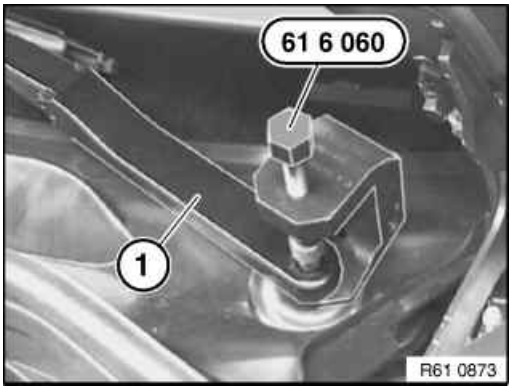

- Pull off the wiper arm (1) using special tool .

4 – Remove the gutter strip on the windscreen on the left and right

NOTICE

Description is for left component only. Procedure on the right side is identical.

▶ **Remove the gutter strip on the windscreen**

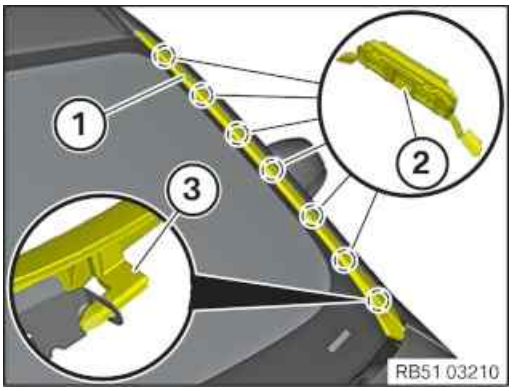

- Unclip the gutter strip (1) from the clips (2) beginning at the roof to the top.
- Feed the gutter strip (1) out of the guide (3).

5 – Remove the rear cowl panel cover

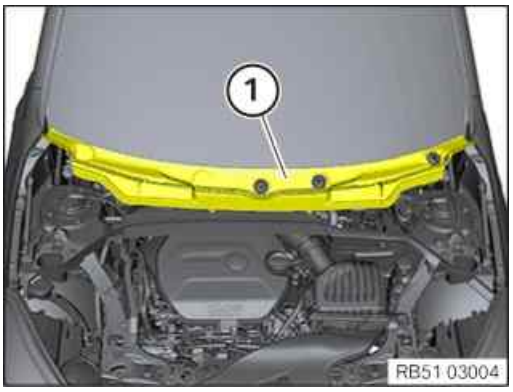

- Disengage and guide out the rear cowl panel cover (1) towards the top.

6 – Removing the upper bulkhead cover

- Loosen screws (1).

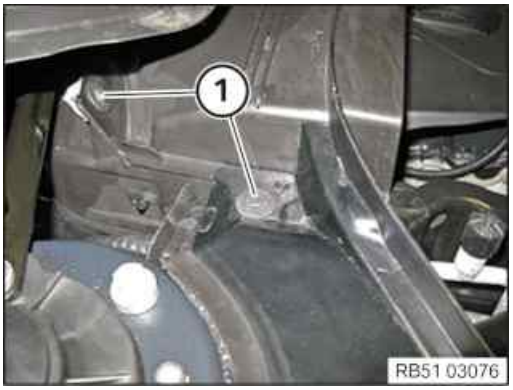

- Loosen screws (1).

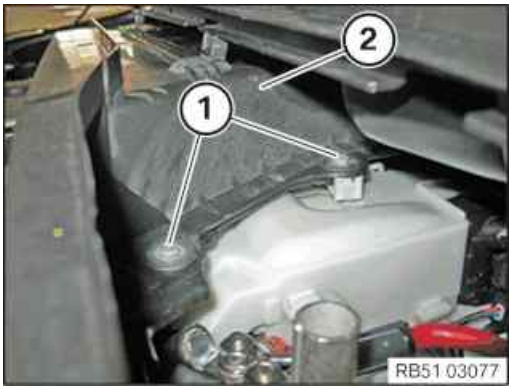

- Loosen screws (1).
- Feed out and remove the upper bulkhead cover (2).

7 – Removing the acoustic cover

WARNING

Hot surfaces.

Risk of burning!

- Perform all work only on components that have cooled down.

RISK OF DAMAGE

Damage to the acoustic cover.

Jerky movements during disassembly and excessive application of force during installation may result in breakage of the acoustic cover.

- Disassemble or mount the acoustic cover carefully.
- Disassemble or mount snap-lock couplings of the ball pivots one after the other.
- Disassemble or mount acoustic cover only at temperatures >20 °C.
- Use only distilled water as an auxiliary material during installation, no lubricants.

- Unclip the acoustic cover from the marked areas towards the top.

8 – Remove resonator

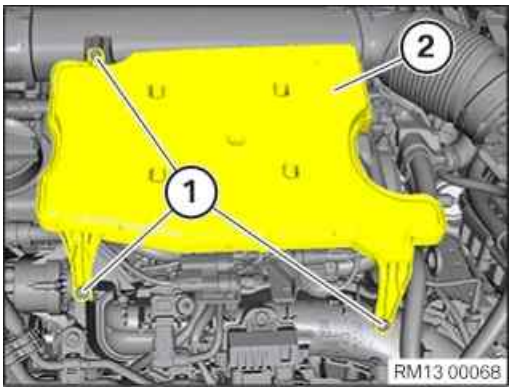

- Loosen screws (1).
- Guide out and remove the resonator (2).

9 – Removing the front underbody protection

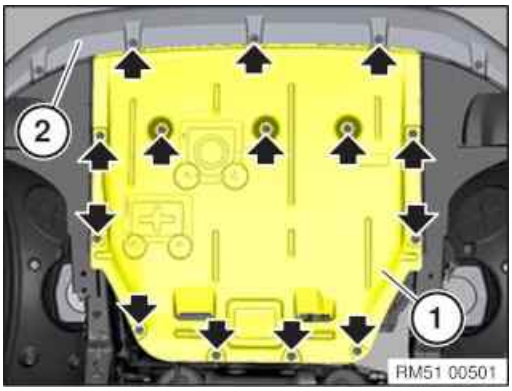

- Remove screws (arrows).
- Pull out and remove front underbody protection (1) under the bumper panel (2).

MAIN WORK

10 – Removing clean air pipe

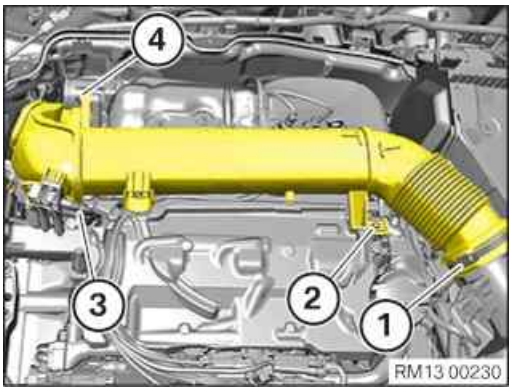

- Release the screw clamp (1).
- Loosen screw (2).
- Unlock and loosen connector (3).
- Loosen screw (4).

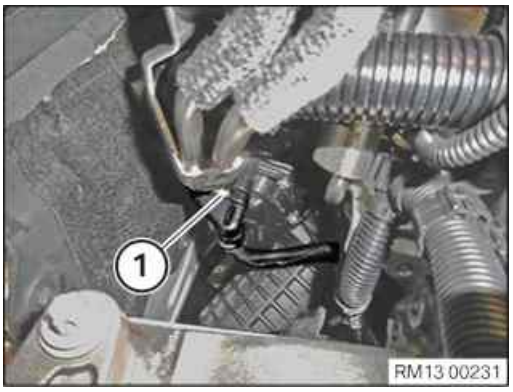

- Unlock and loosen connector (1).

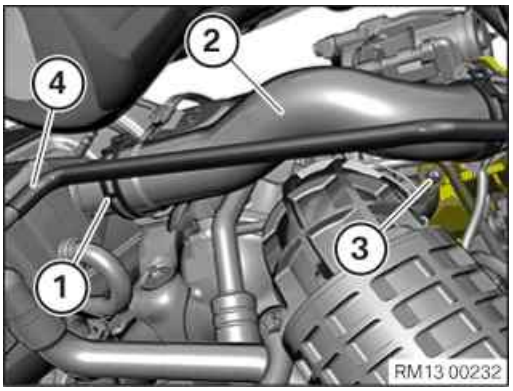

- Unfasten clamp (1).
- Feed out pressure hose (2) and set it aside.
- Loosen screw (3).
- Pull off pressure hose (4) and set it aside.

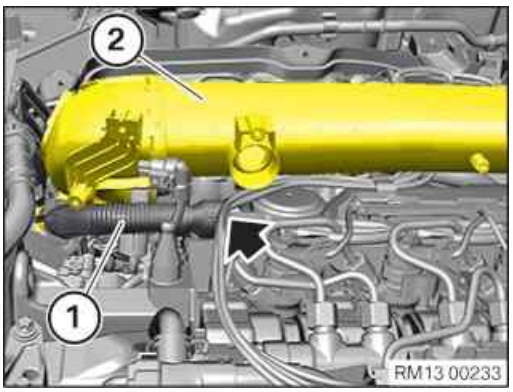

- Detach ventilation line (1) from clean air pipe (2) and set it aside.
- Detach ventilation line (1) from cylinder head cover (arrow).
- Remove the ventilation line (1).

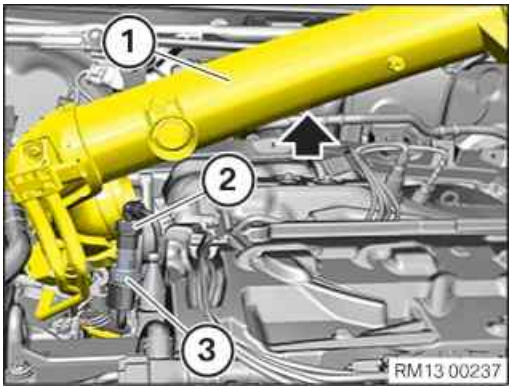

- Thread out clean air pipe (1) upwards in direction of arrow and set it aside.
- Unlock and loosen connector (2).
- Detach exhaust gas pressure sensor (3).
- Guide out and remove the exhaust gas pressure sensor (3).
- Feed out clean air pipe and remove (1).

11 – Installing clean air pipe

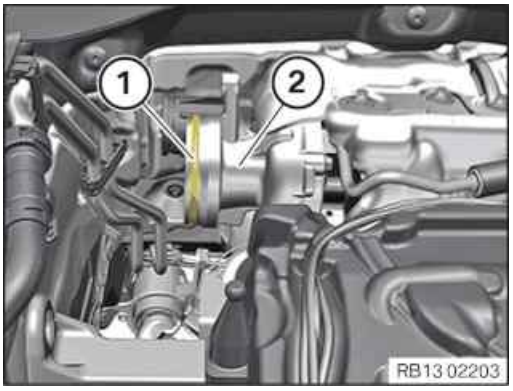

- Check the sealing ring (1) of the exhaust turbocharger (2) for damage and renew it if necessary.

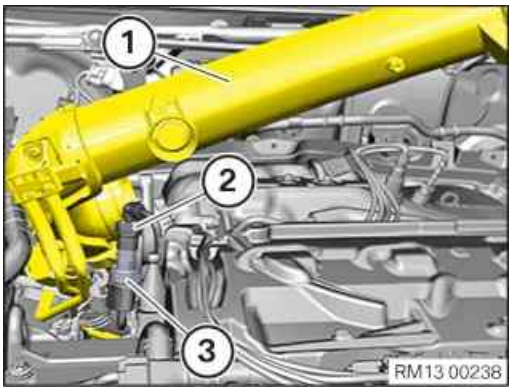

- Feed in clean air pipe (1) and lay it down as shown.
- Insert and install the exhaust gas pressure sensor (3).
- Tighten the exhaust gas pressure sensor (3).

Exhaust gas pressure sensor

Exhaust gas pressure sensor		Tightening torque	13,5 Nm

- Connect and lock the connector (2).

  The connector (2) must engage audibly.
- Install the clean air pipe (1).

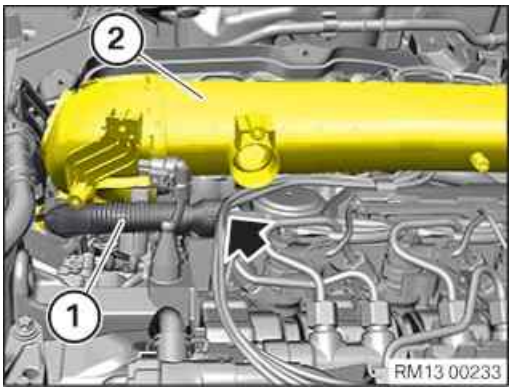

- Feed in ventilation line (1) at clean air pipe (2) and install.
- Feed in ventilation line (1) at cylinder head cover (arrow) and install.

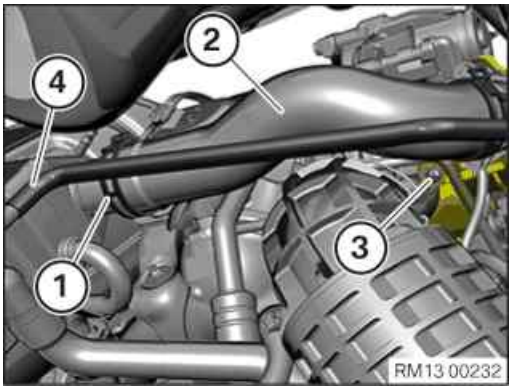

- Tighten down screw (3).

Clean air pipe to exhaust turbocharger

Torx bolt BM8x25		Tightening torque	8 Nm

- Feed the pressure hose (2) in and install.
- Position and secure the clamp (1).
- Check pressure hose (4).
- Renew hardened pressure hoses (4).

  Parts: Pressure hose
- Connect pressure hose (4) and secure with 15 mm to 19 mm screw clamps.

Clamp for the pressure hose on the differential pressure sensor

Clamp 15–19mm		Tightening torque	3 Nm

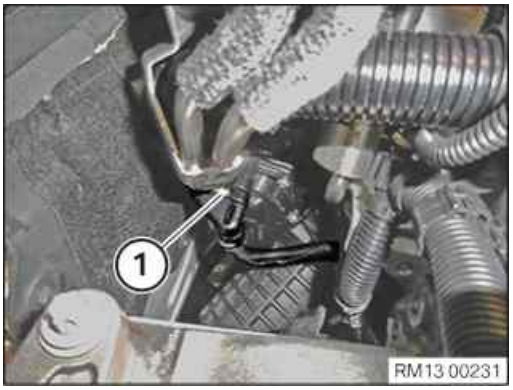

- Connect and lock the connector (1).

  The connector (1) must lock audibly.

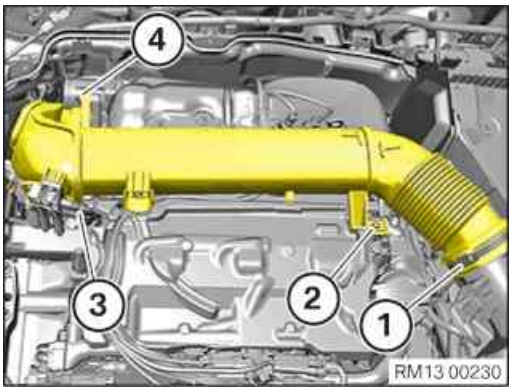

- Tighten down screw (4).

Clean air pipe to exhaust turbocharger

Torx bolt BM8x25		Tightening torque	8 Nm

- Connect and lock the connector (3).

  The connector (3) must engage audibly.
- Renew the screw (2).

  Parts: Screw
- Tighten down screw (2).

Clean air pipe to cylinder head cover

Oval-head screw	Renew screw.	Tightening torque	8 Nm

- Tighten the screw clamp (1).

Clean air pipe to intake silencer housing

Clamp		Tightening torque	3 Nm

POSTPROCESSES

12 – Installing the front underbody protection

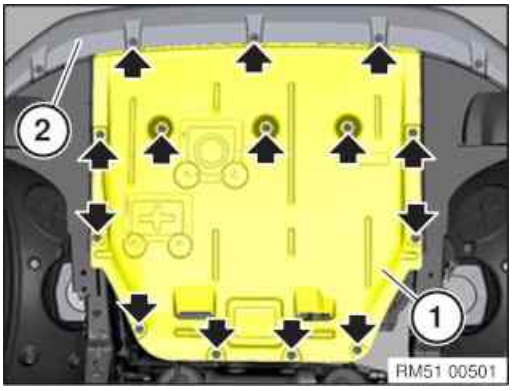

- Guide the front underbody protection (1) in under the bumper panel (2) and position it at the screw points.
- Tighten screws (arrows).

Underbody protection front

			3 Nm

13 – Install resonator

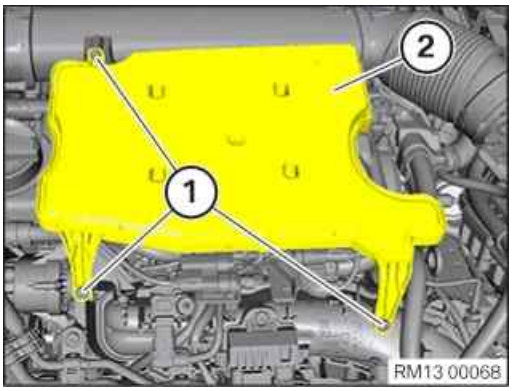

- Insert and install the resonator (2).
- Renew screws (1).

  Parts: Bolts
- Tighten the screws (1).

Resonator to manifold and clean air pipe

Screw TS6	Renew screw.	Tightening torque	5 Nm

14 – Install acoustic cover

RISK OF DAMAGE

Damage to the acoustic cover.

Jerky movements during disassembly and excessive application of force during installation may result in breakage of the acoustic cover.

- Disassemble or mount the acoustic cover carefully.
- Disassemble or mount snap-lock couplings of the ball pivots one after the other.
- Disassemble or mount acoustic cover only at temperatures >20 °C.
- Use only distilled water as an auxiliary material during installation, no lubricants.

- Check for correct installation of all rubber mounts in the acoustic cover (1).

- Clip in the acoustic cover into the holders in the indicated areas.
- Make sure that the acoustic cover engages audibly.

15 – Installing the upper bulkhead cover

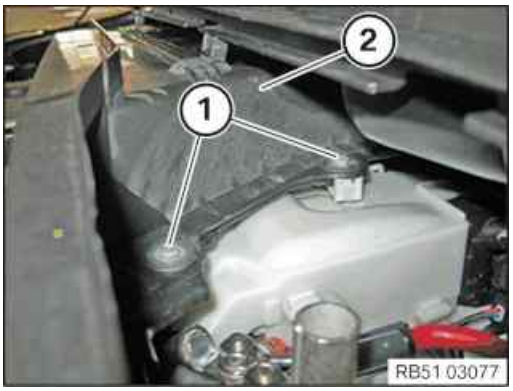

- Feed in and install cover (2) of the bulkhead at the top.
- Tighten the screws (1).

Bulkhead cover, top

Screw		Tightening torque	3 Nm

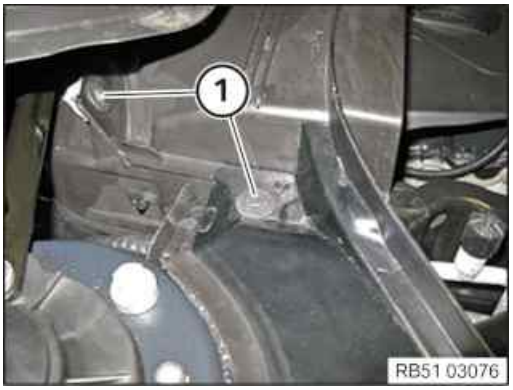

- Tighten the screws (1).

Bulkhead cover, top

Screw		Tightening torque	3 Nm

- Tighten the screws (1).

Bulkhead cover, top

Screw		Tightening torque	3 Nm

16 – Install the rear cowl panel cover

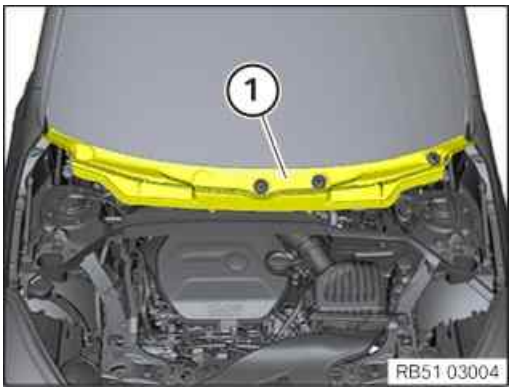

- Feed in and engage the rear cowl panel cover (1).

17 – Install the gutter strip on the windscreen on the left and right

NOTICE

Description is for left component only. Procedure on the right side is identical.

▸ **Install the gutter strip on the windscreen**

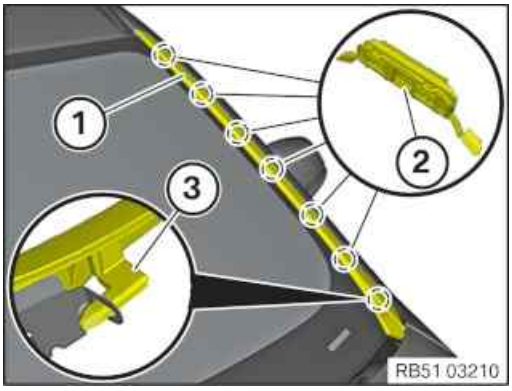

- Check the clamps (2) for damage and renew if necessary.
- Insert the gutter strip (1) with the guide (3).
- Align the gutter strip (1) at the roof and clip it in.

18 – Install left and right wiper arm

NOTICE

Description is for left component only. Procedure on the right side is identical.

▸ **Install the wiper arm**

TECHNICAL INFORMATION

The wiper system must be in zero position.
After installing the cowl panel cover and before fitting the wiper arm:
Activate the wiper system once to ensure that it has the correct installation position.

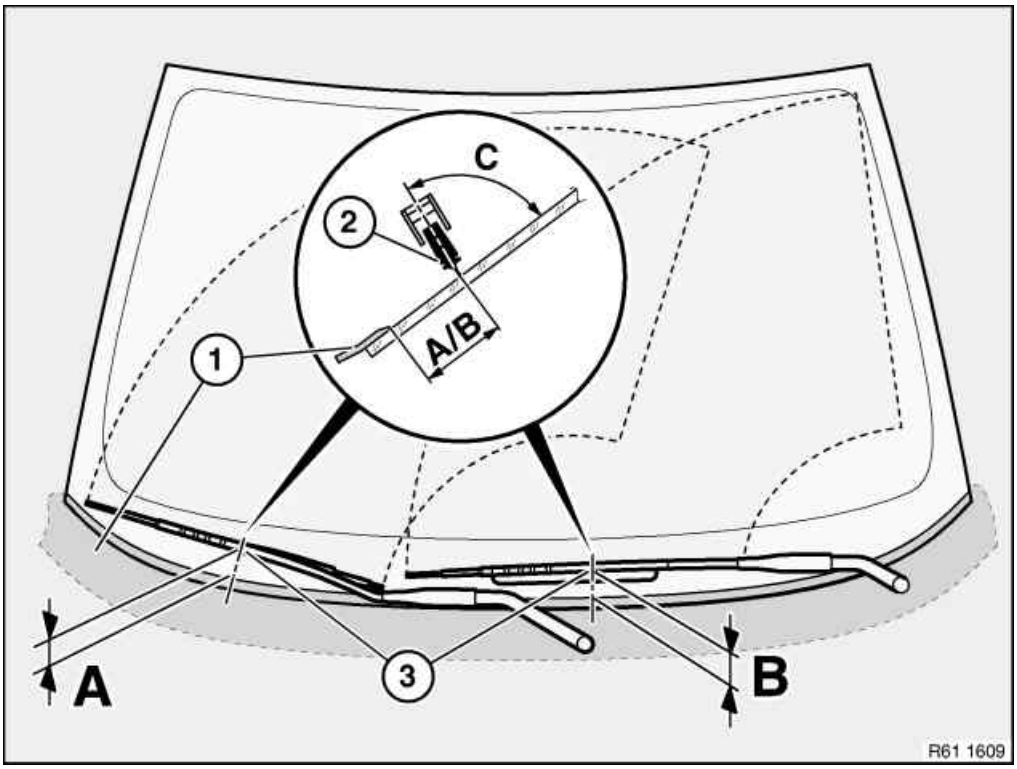

- Connect the wiper arm (3).
- Correctly position the wiper arm (2) in relation to the window edge (1).

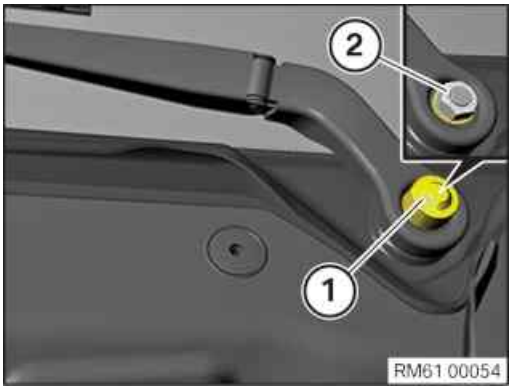

NOTICE

Description is for left component only. Procedure on the right side is identical.

- Tighten nut (2).

Windscreen wiper arm

Combination hexagon nut		Tightening torque	35 Nm

- Connect the protective cap (1).

19 – Installing front cowl panel cover

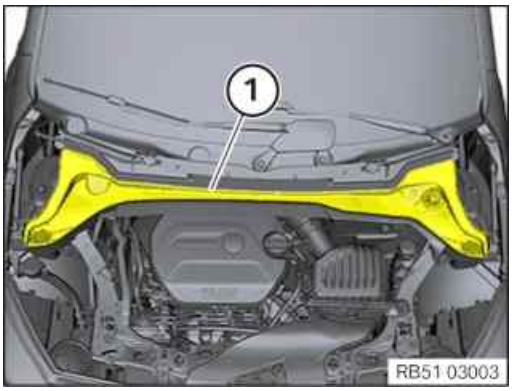

- Insert the cowl panel cover front (1) to the rear and install.
- Check cowl panel cover at front is correctly seated (1).

20 – Install the seal for the bonnet

NOTICE

Schematic diagram is for example purposes. Some parts may differ in certain details.

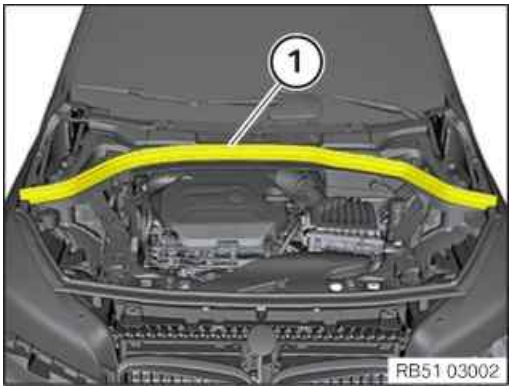

- Install bonnet seal at rear (1).
- Ensure that the rear bonnet seal (1) is fitted correctly.

Additional Information

Overview of Tightening Torques

Exhaust gas pressure sensor			Used in step 11
Exhaust gas pressure sensor		Tightening torque	13,5 Nm

Clean air pipe to exhaust turbocharger			Used in step 11
Torx bolt BM8x25		Tightening torque	8 Nm

Clamp for the pressure hose on the differential pressure sensor			Used in step 11
Clamp 15–19mm		Tightening torque	3 Nm

Clean air pipe to cylinder head cover			Used in step 11
Oval-head screw	Renew screw.	Tightening torque	8 Nm

Clean air pipe to intake silencer housing			Used in step 11
Clamp		Tightening torque	3 Nm

Underbody protection front			Used in step 12
			3 Nm

Resonator to manifold and clean air pipe			Used in step 13
Screw TS6	Renew screw.	Tightening torque	5 Nm

Bulkhead cover, top			Used in step 15
Screw		Tightening torque	3 Nm

Windscreen wiper arm			Used in step 18
Combination hexagon nut		Tightening torque	35 Nm

Overview of Special Tools

Overview Technical Data

13 71 035 Removing and installing/replacing clean air pipe (B37)

Necessary preliminary tasks:

- Remove resonator.
- Remove upper bulkhead cover.
- Remove strut brace. **(F48)**

Removal:

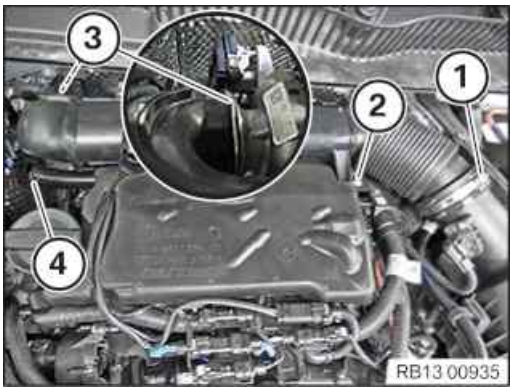

Release clamp (1).
Release screw (2).
Unlock and release clamp (3).
Unlock ventilation line (4) and release.

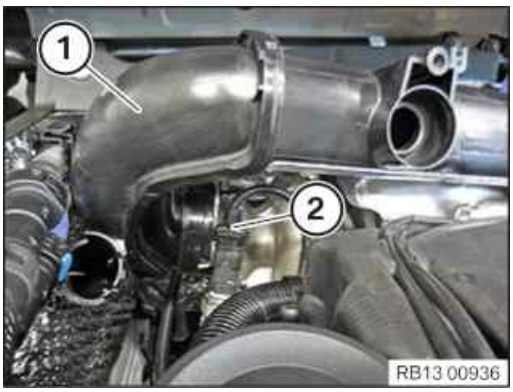

Raise clean air pipe (1).
Unlock and disconnect plugs (2).
Feed out clean air pipe (1) and remove.

Preparation for installation:

Check gaskets.

Renew damaged gaskets.

Parts: Gaskets.

Installation:

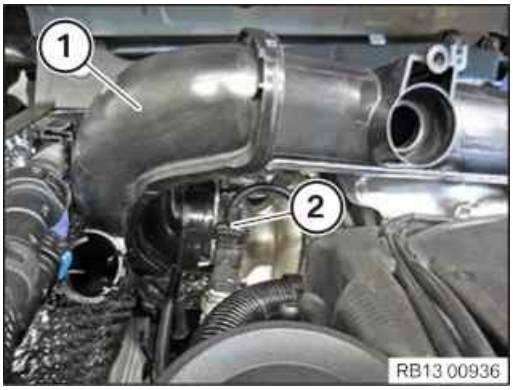

Thread in clean air pipe (1) and install.

Connect connector (2) and lock.

Connector (2) must snap audibly into place.

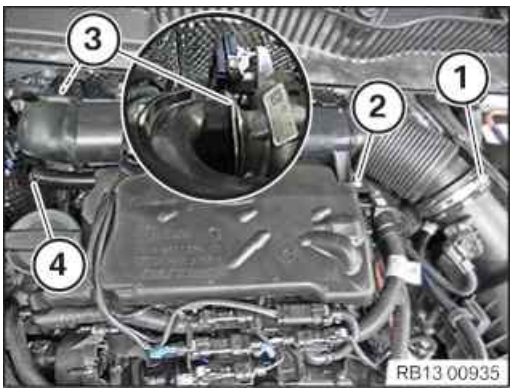

Lock clamp (3).

Clamp (3) must audibly snap into place.

Tighten screw (2).

Tightening torque 13 71 6AZ.

Tighten clamp (1).

Tightening torque 13 71 3AZ.

Connect and lock tank ventilation line (4).

Tank ventilation line (4) must engage audibly.

Required follow-up work:

- Install resonator.
- Install upper bulkhead cover.
- Install strut brace. **(F48)**

11 14 290 Removing and installing/replacing front acoustic engine cover (B37)

[redacted]

Necessary preliminary tasks:

- Remove acoustic cover
- Remove front underbody protection.
- Right charge air line. **(Loosen only)**

[redacted]

Removal:

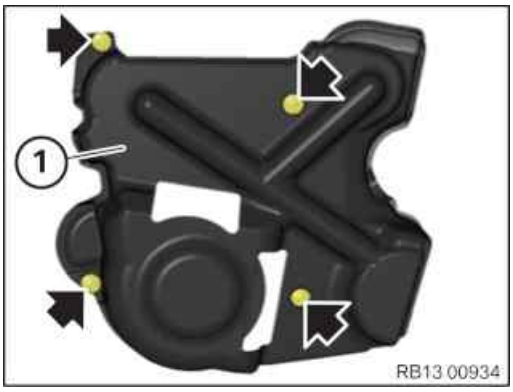

Unlock and loosen clamp along the arrows.

Disengage acoustic cover (1) towards the bottom and remove.

[redacted]

Installation:

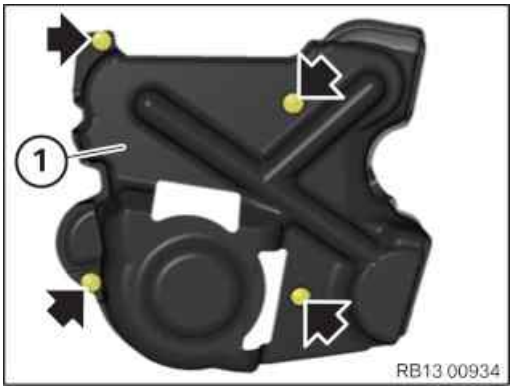

Feed in acoustic cover (1) and install.

Connect and lock clamps along the arrows.

[redacted]

Required reworking:

- Install the acoustic cover.
- Install front underbody protection.
- Install right charge air line.

13 71 000 Removing and installing/replacing intake silencer housing (B37, B38, B46, B47, B48)

Necessary preliminary tasks:

- Remove the intake neck for intake filter housing.

Removal:

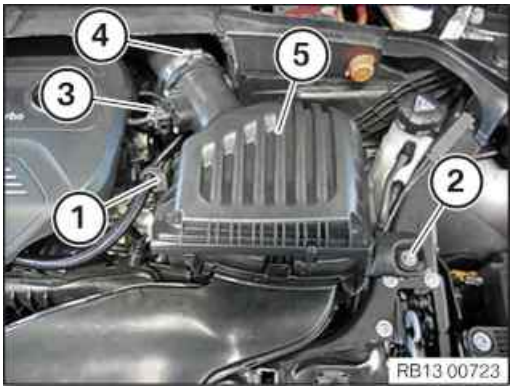

Pull off rubber retainer (1) from intake silencer housing.
Release screw (2).
Unlock connector (3) on hot film air mass meter and disconnect.
Release clamp (4) and pull clean air pipe off of intake silencer housing.
Pull the intake filter housing (5) up and out of the rubber mounts and remove.

Installation:

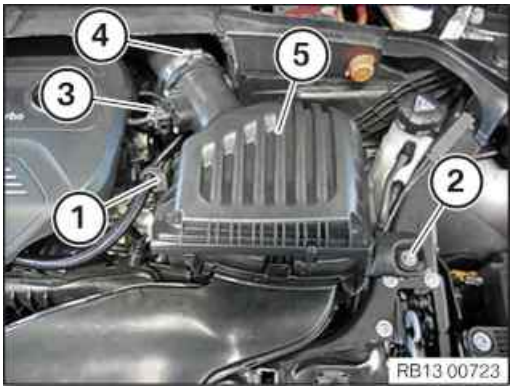

Insert intake silencer housing (5) into rubber mount.
Slide on clean air pipe onto intake silencer housing.
Tighten clamp (4).
Tightening torque 13 71 3AZ.
Connect connector (3) to the hot film air mass meter and lock.
Connector (3) must engage audibly.
Tighten screw (2).
Tightening torque 13 71 2AZ.

Required follow-up work:

- Install intake neck for intake filter housing .

13 71 196 Removing and installing/replacing resonator (B47, B37)

Necessary preliminary tasks:

- Remove acoustic cover

Removal:

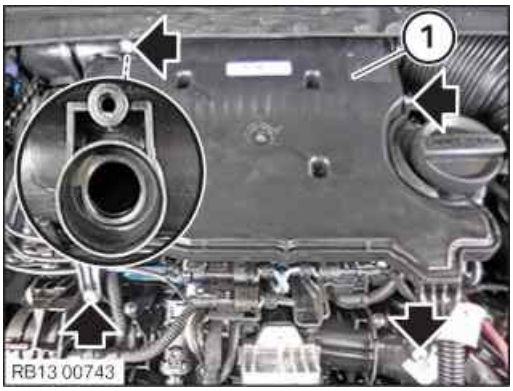

Loosen the screws along the arrows.

Remove resonator (1).

Preparation for installation:

Check gasket.

Replace damaged gasket.

Part: Gasket.

Installation:

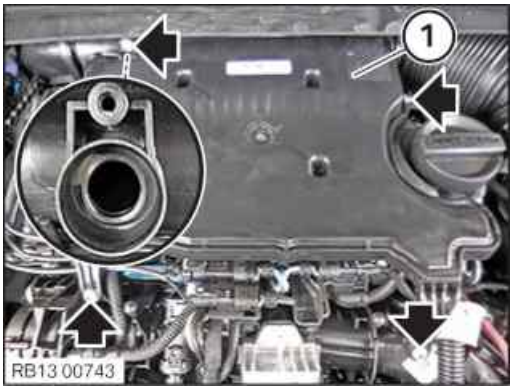

Install resonator (1).

Tighten screws along arrows.

Tightening torque 13 71 5AZ.

Required follow-up work:

- Install acoustic cover

13 71 031 Replace intake neck for intake filter housing

1 – Remove the intake neck for intake silencer housing

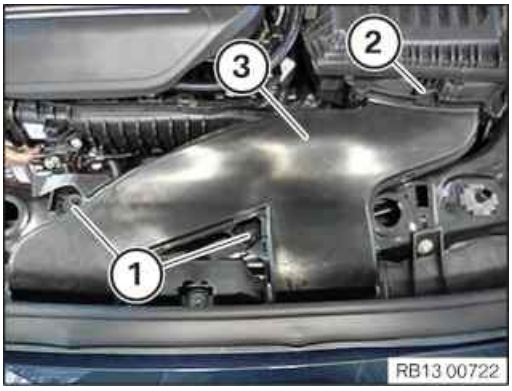

- Loosen nuts (1).
- Loosen the lock (2).
- Guide the intake neck (3) out and remove it.

2 – Install the intake neck for the intake filter housing

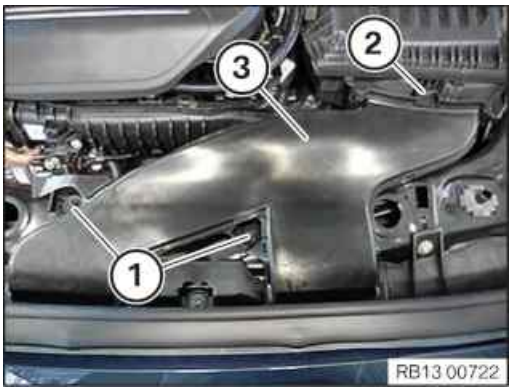

- Insert and install the intake neck (3).

  The lock (2) must audibly engage.
- Tighten nuts (1).

Intake neck to cross connection

M6		Tightening torque	8 Nm

Additional Information

Overview of Tightening Torques

Intake neck to cross connection Used in step 2

M6		Tightening torque	8 Nm

13 72 001 Replacing air filter element

[redacted]

Removal:

Release screws (1).

Slightly raise upper section of intake filter housing (1) until air filter element (2) is accessible.

Remove air filter element (2).

[redacted]

Preparation for installation:

Clean inside of intake silencer housing.

[redacted]

Installation:

Slightly raise upper section of intake filter housing (1).

Install new air filter element (2).

Remount upper section of intake filter housing.

Tighten down screws (1).

Tightening torque 13 71 4AZ.

13 72 001 Replacing air filter element

1 – Remove air filter element

- Loosen screws (1).

- Slightly raise the upper section of the intake filter housing (1) until the air cleaner element (2) is accessible.
- Remove the air filter element (2).

2 – Cleaning the lower section of the intake filter housing

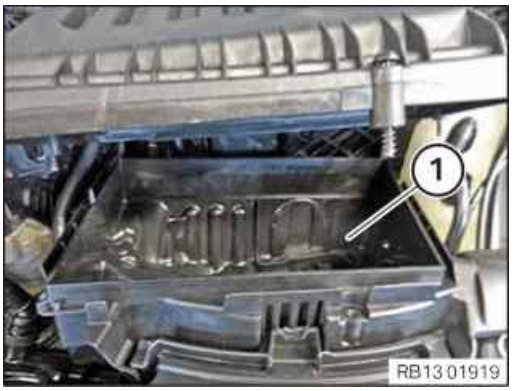

- Clean the lower section of the intake filter housing (1).

3 – Installing the air filter element

- Lift upper section of intake filter housing (1) somewhat.
- Renew the air filter element (2).

  Parts: Air filter element
- Feed in and install the air filter element(2).

- Tighten the screws (1).

Intake filter housing upper section to intake filter housing lower section

		Tightening torque	2,2 Nm

Additional Information

Overview of Tightening Torques

Intake filter housing upper section to intake filter housing lower section Used in step 3

		Tightening torque	2,2 Nm

13 72 001 Replacing air filter element

[redacted]

Removal:

Release screws (1).

Slightly raise upper section of intake filter housing (1) until air filter element (2) is accessible.

Remove air filter element (2).

[redacted]

Preparation for installation:

Clean inside of intake silencer housing.

[redacted]

Installation:

Slightly raise upper section of intake filter housing (1).

Install new air filter element (2).

Remount upper section of intake filter housing.

Tighten down screws (1).

Tightening torque 13 71 4AZ.