RENAULT

0 General vehicle information

01A VEHICLE MECHANICAL SPECIFICATIONS

01C VEHICLE BODYWORK SPECIFICATIONS

02A LIFTING EQUIPMENT

03B COLLISION

04B CONSUMABLES - PRODUCTS

X79

NOVEMBER 2009 EDITION ANGLAISE

"The repair procedures given by the manufacturer in this document are based on the technical specifications current when it was prepared.

The procedures may be modified as a result of changes introduced by the manufacturer in the production of the various component units and accessories from which the vehicles are constructed".

All rights reserved by Renault.

Copying or translating, in part or in full, of this document or use of the service part reference numbering system is forbidden without the prior written authority of Renault.

© Renault s.a.s 2007

DUSTER - Chapitre 0

Contents

Pages

01A **VEHICLE MECHANICAL SPECIFICATIONS**

Vehicle: Specifications 01A-1

01C **VEHICLE BODYWORK SPECIFICATIONS**

Vehicle: Identification 01C-1

Vehicle panel gaps: Adjustment value 01C-2

02A **LIFTING EQUIPMENT**

Vehicle: Towing and lifting 02A-1

03B **COLLISION**

Vehicle involved in an impact: Impact fault finding 03B-1

04B **CONSUMABLES - PRODUCTS**

Vehicle: Parts and consumables for the repair 04B-1

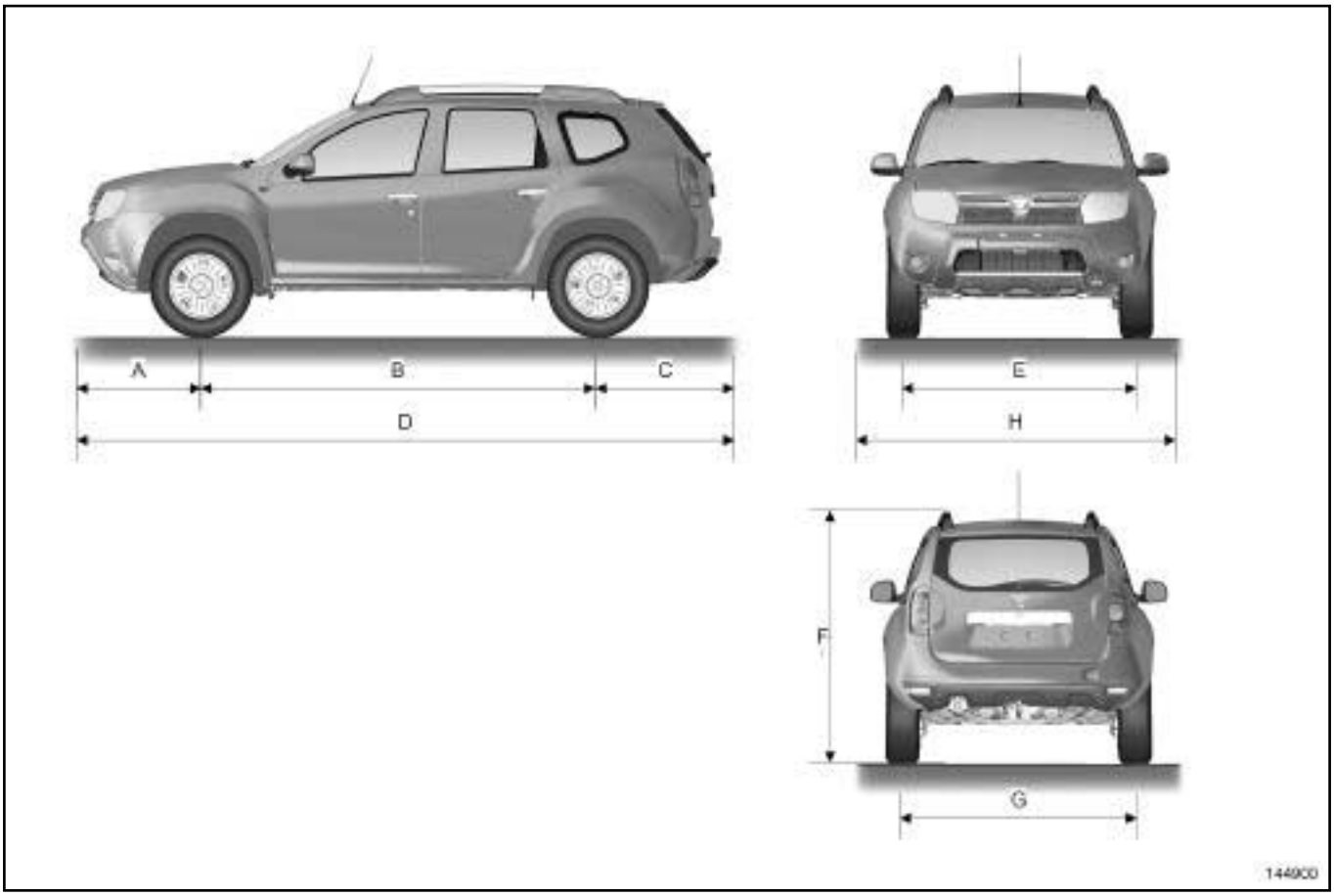

144900

4X2 TRANSMISSION

Dimensions in metres:

(A)	0.822
(B)	2.673
(C)	0.820
(D)	4.315
(E)	1.560
(F) (unladen)	1.690
(G)	1.567
(H)	1.822

4X4 TRANSMISSION

Dimensions in metres:

(A)	0.822
(B)	2.671
(C)	0.822
(D)	4.315
(E)	1.560
(F) (unladen)	1.682
(G)	1.570
(H)	1.822

Engine			Gearbox			Emissions standard
Engine type	Engine suffix	Cubic capacity(cc)	Gearbox type	Gearbox suffix	Transmission type	
K4M	606	1598	TL8	002	4x4	EURO 4
						EURO 5
	690		JR5	187	4x2	EURO 4
K9K	796	1461	JR5	189	4x2	EURO 4
	884		TL8	000	4x4	EURO 1
						EURO 3
						EURO 4
	898					EURO 5

I - LOCATION OF VEHICLE IDENTIFICATION PLATE (A)

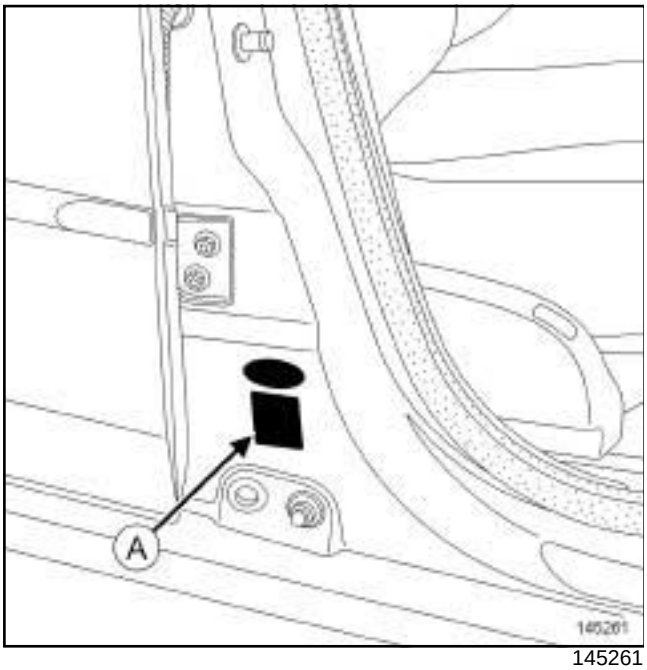

145261

II - LOCATION OF THE VEHICLE IDENTIFICATION NUMBER (B)

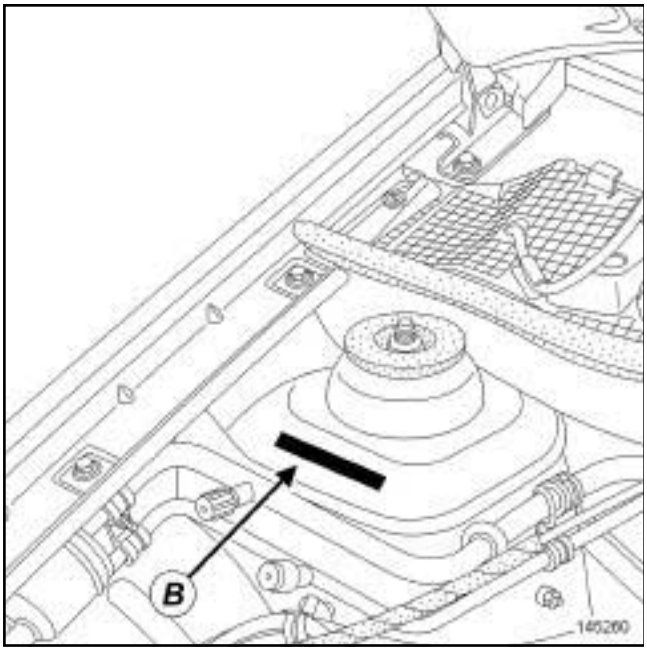

145260

Note:

If the complete body is being replaced, it must be marked in compliance with the current regulations.

III - DETAILED VIEW OF THE VEHICLE IDENTIFICATION PLATE

Plate (A)

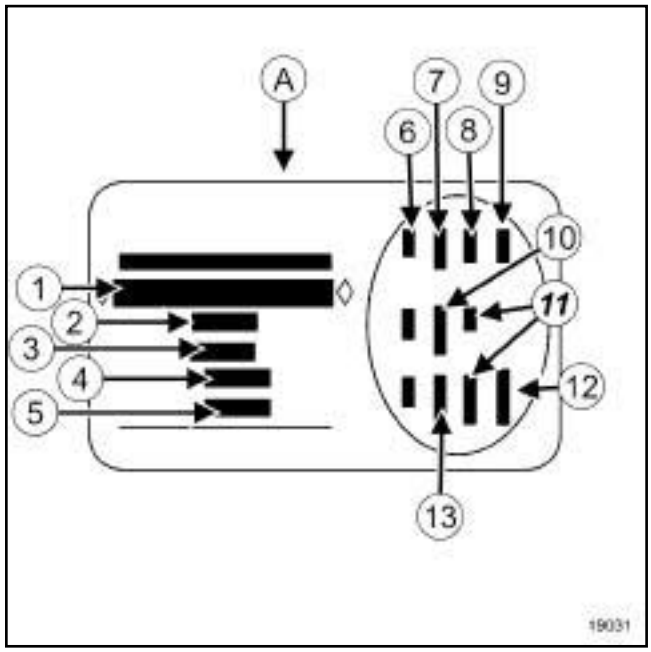

19031

(**1**)	Vehicle type and type number; this information also appears on marking (B)
(**2**)	MGVW (Maximum Gross Vehicle Weight)
(**3**)	GTW (Gross train weight, vehicle under load with trailer)
(**4**)	Maximum permissible front axle load
(**5**)	Maximum permissible rear axle load
(**6**)	Vehicle technical specifications
(**7**)	Paintwork reference number
(**8**)	Equipment level
(**9**)	Vehicle type
(**10**)	Upholstery code
(**11**)	Additional equipment details
(**12**)	Production number
(**13**)	Interior trim code

WARNING

The clearance values are given for information purposes.

When adjusting clearances, certain rules have to be followed:

- maintain symmetry with respect to the opposite side,
- ensure the flush fitting is correct,
- check correct operation of the opening, and water/air-tightness.

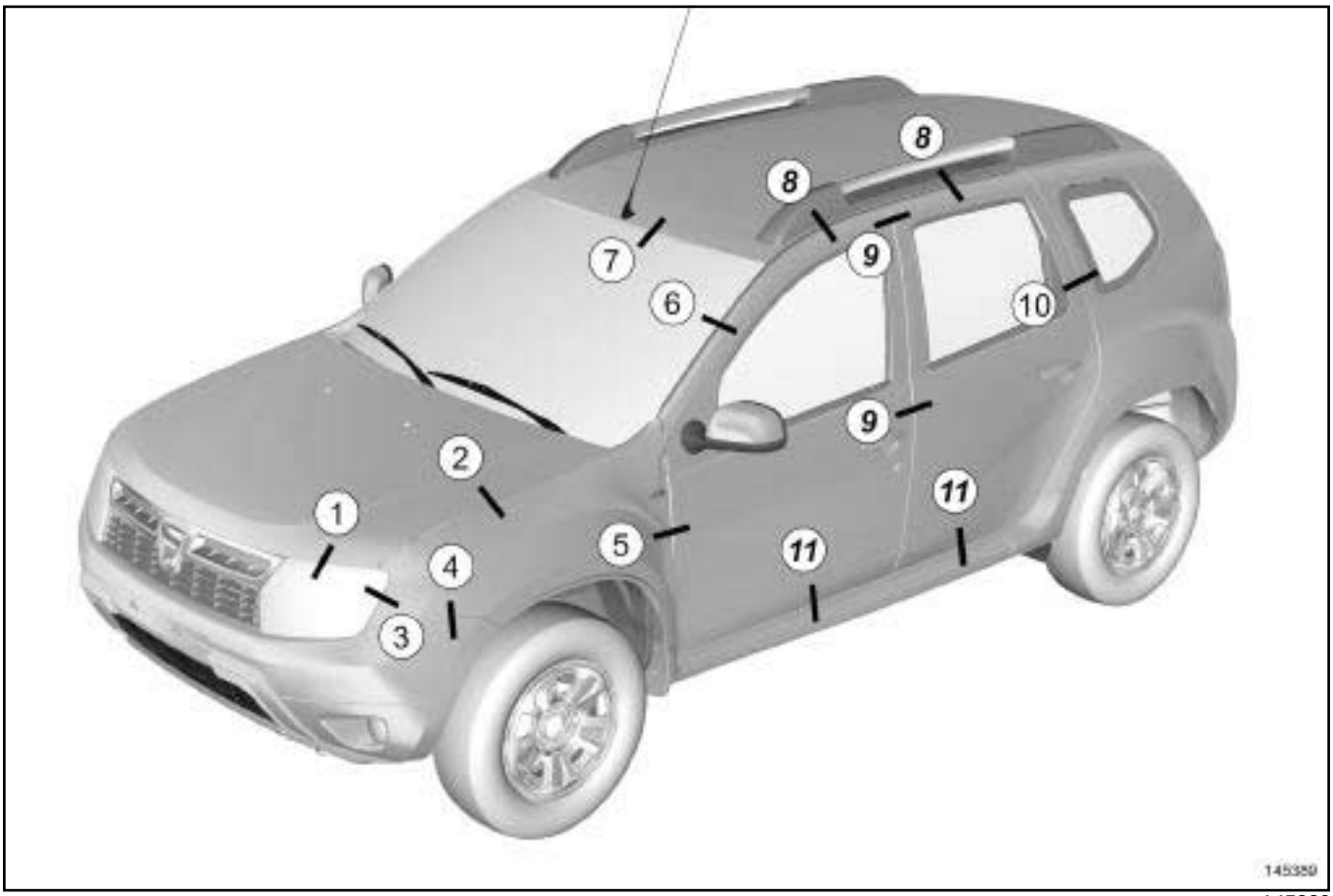

145389

No.	Location	Clearances (mm)
(**1**)	bonnet / headlight	5 ± 2
(**2**)	bonnet / front wing	4 ± 1.5
(**3**)	headlight / front wing	2 ± 1.5
(**4**)	front bumper / front wing	0.5
(**5**)	front side door / front wing	4.5 ± 1
(**6**)	front side door / windscreen pillar	18 ± 1

No.	Location	Clearances (mm)
(**7**)	windscreen / roof	4.5 ± 1
(**8**)	side doors / roof	18 ± 1
(**9**)	front side door / rear side door	4.5 ± 1
(**10**)	rear side door / rear wing panel	4.5 ± 1
(**11**)	side doors / sill panel	6 ± 2

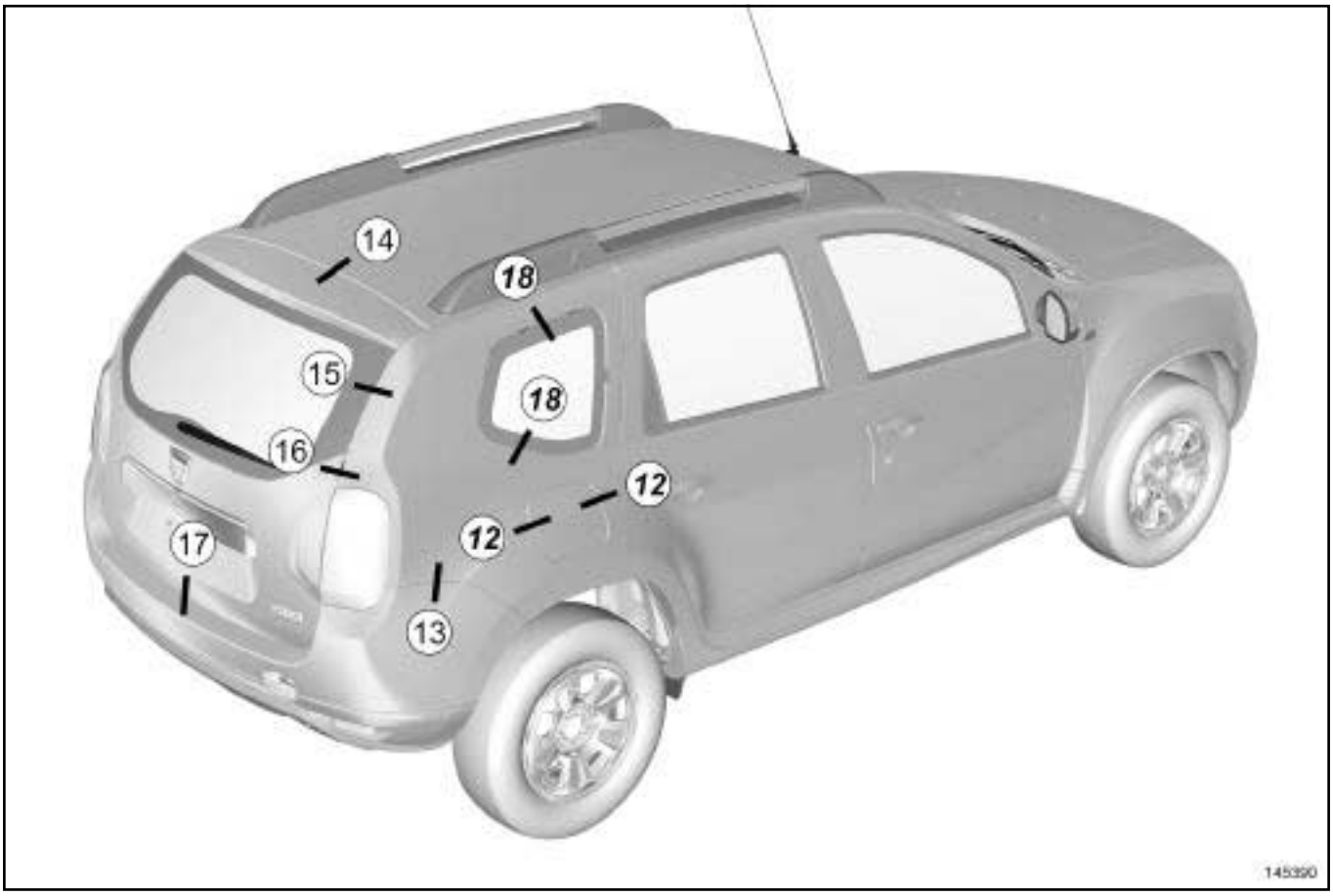

145390

No.	Location	Clearances (mm)
(**12**)	rear wing panel / fuel filler flap cover	3 ± 1.5
(**13**)	rear wing panel / rear bumper	0.5
(**14**)	roof / tailgate	5 ± 1
(**15**)	tailgate rear screen / rear wing panel	4.5 ± 2
(**16**)	tailgate / rear wing panel	4.5 ± 1.5
(**17**)	tailgate / rear bumper	7 ± 2
(**18**)	rear quarter panel window / rear wing panel	3 ± 1

Equipment required
safety strap(s)

I - TOWING

WARNING

See the current towing regulations in each country.

Never use the driveshafts, axle assembly components or suspension components as attachment points.

Tighten and lock the towing ring before use.

Always pull in the direction of the rod's length in order to avoid breaking it.

Vehicles fitted with automatic transmission:

- It is preferable to transport the vehicle on a flatbed or to tow it by lifting the front wheels; as an exception, the vehicle can be towed with the wheels on the ground, but at a speed of less than 12 mph (20 km/h) over a maximum distance of **18 miles (30 km)** (with the gear lever in neutral).

1 - Position of front attachment point

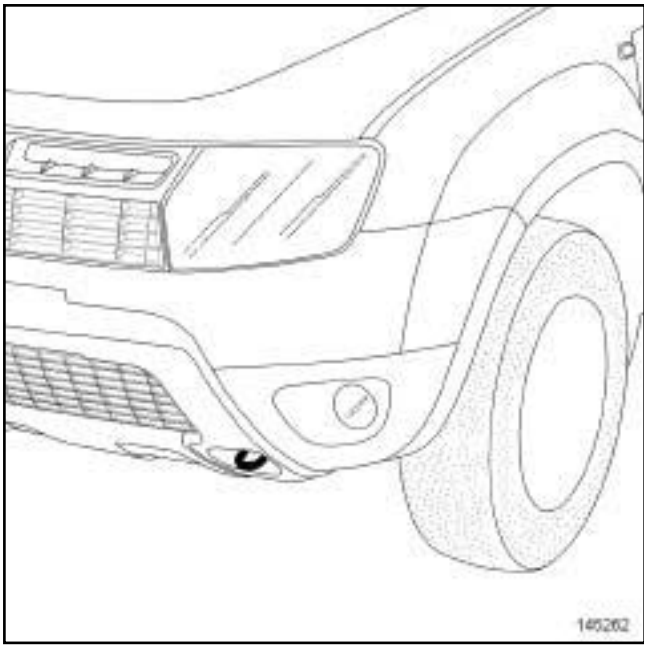

145262

2 - Position of rear attachment point

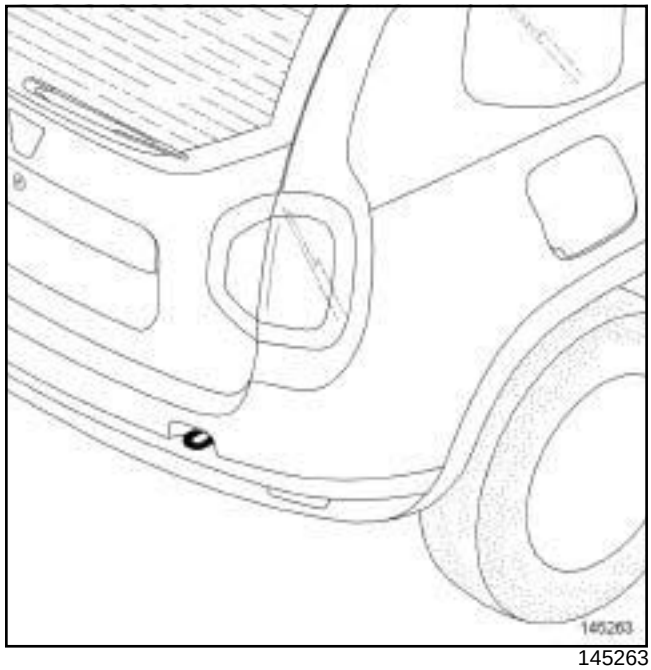

145263

II - LIFTING BY TROLLEY JACK

IMPORTANT

Appropriate axle stands must be used if a trolley jack is used.

WARNING

The subframe of this vehicle is protected by products providing a **6-year** anti-corrosion warranty.

Never use equipment not fitted with rubber pads, to avoid direct metal to metal contact which could damage the original protection.

The vehicle must not be raised by support points under the front suspension arms or under the rear axle.

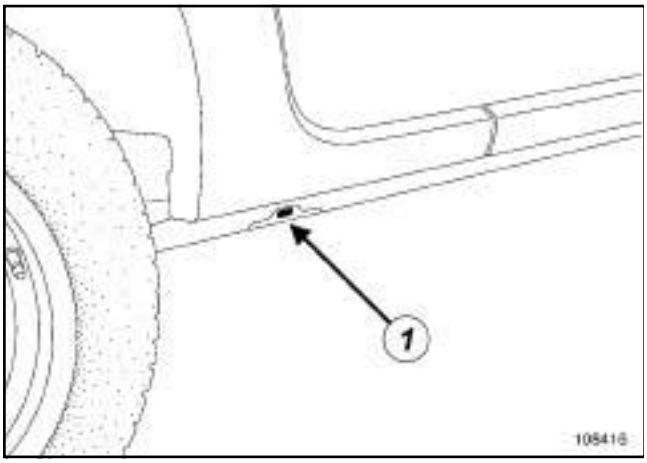

108416

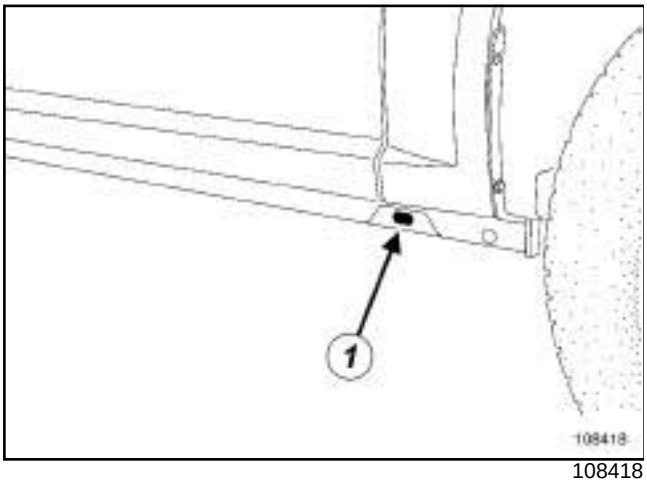

108418

To raise a front or rear wheel, use (**1**) as the support point.

To mount the vehicle on axle stands, the entire vehicle must be lifted on one side and axle stands must be placed under the jacking points for the tool kit jack (**1**) .

III - LIFTING ON A LIFT

1 - Safety advice reminder

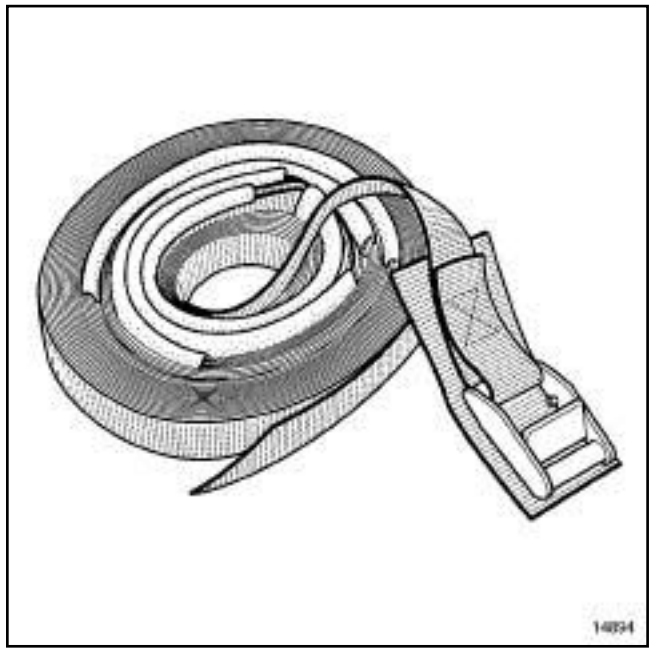

14894

If it is necessary to remove heavy components from the vehicle, it is preferable to use a four-post lift.

After removing certain components (e.g. engine and transmission assembly, rear axle, fuel tank, etc.), there is a danger that the vehicle will tip on a two post lift.

When the vehicle is raised on an underbody two post lift, fit **safety strap(s)**, part no. **77 11 172 554** available from the Parts Department.

2 - Fitting the straps

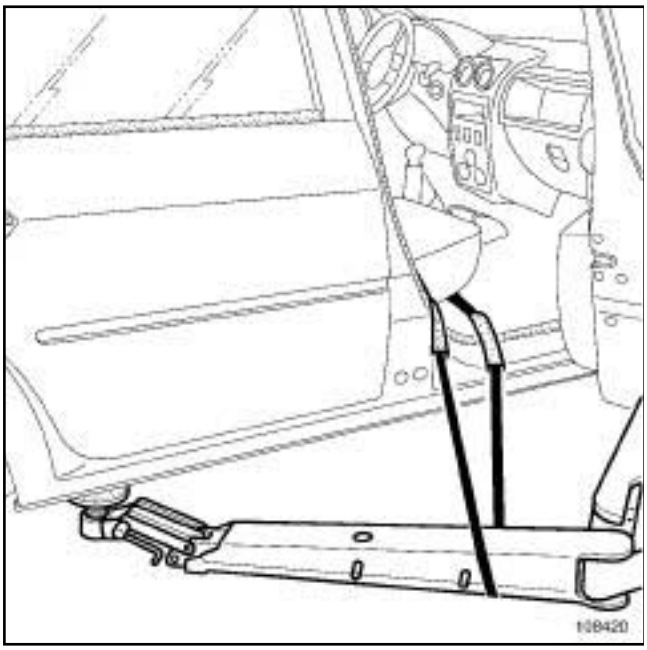

108420

For safety purposes, the straps must always be in perfect condition; replace them if they are damaged.

When fitting the straps, check that the seats and fragile parts of the vehicle are correctly protected.

a - Tilting towards the front

Pass the strap under the rear right-hand arm of the lift.

Pass the strap through the inside of the vehicle.

Pass the strap under the rear left-hand arm of the lift.

Pass the belt through the inside of the vehicle again.

Tighten the strap.

b - Tilting towards the rear

Pass the strap under the front right-hand arm of the lift.

Pass the strap through the inside of the vehicle.

Pass the strap under the front left-hand arm of the lift.

Pass the belt through the inside of the vehicle again.

Tighten the strap.

3 - Permitted jacking points

To raise the vehicle, position the pads of the lift arms as indicated below taking care not to damage the end of the front wing or the underside of the sill panel.

IMPORTANT

Only the jacking points described in this section allow the vehicle to be raised in complete safety.

Do not raise the vehicle using points other than those described in this section.

At the front

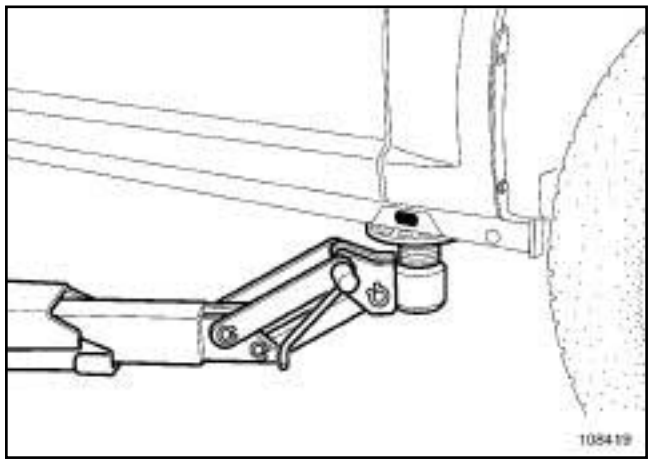

108419

Position the lift arms under the end of the sill panel body flanges.

At the rear

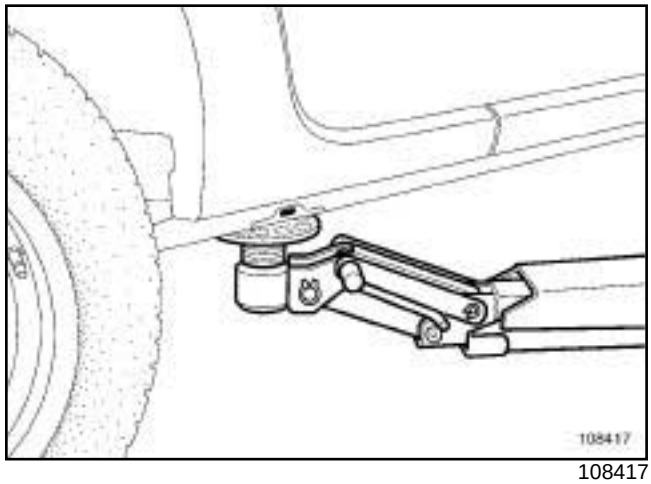

108417

Position the lift arms under the end of the sill panel body flanges.

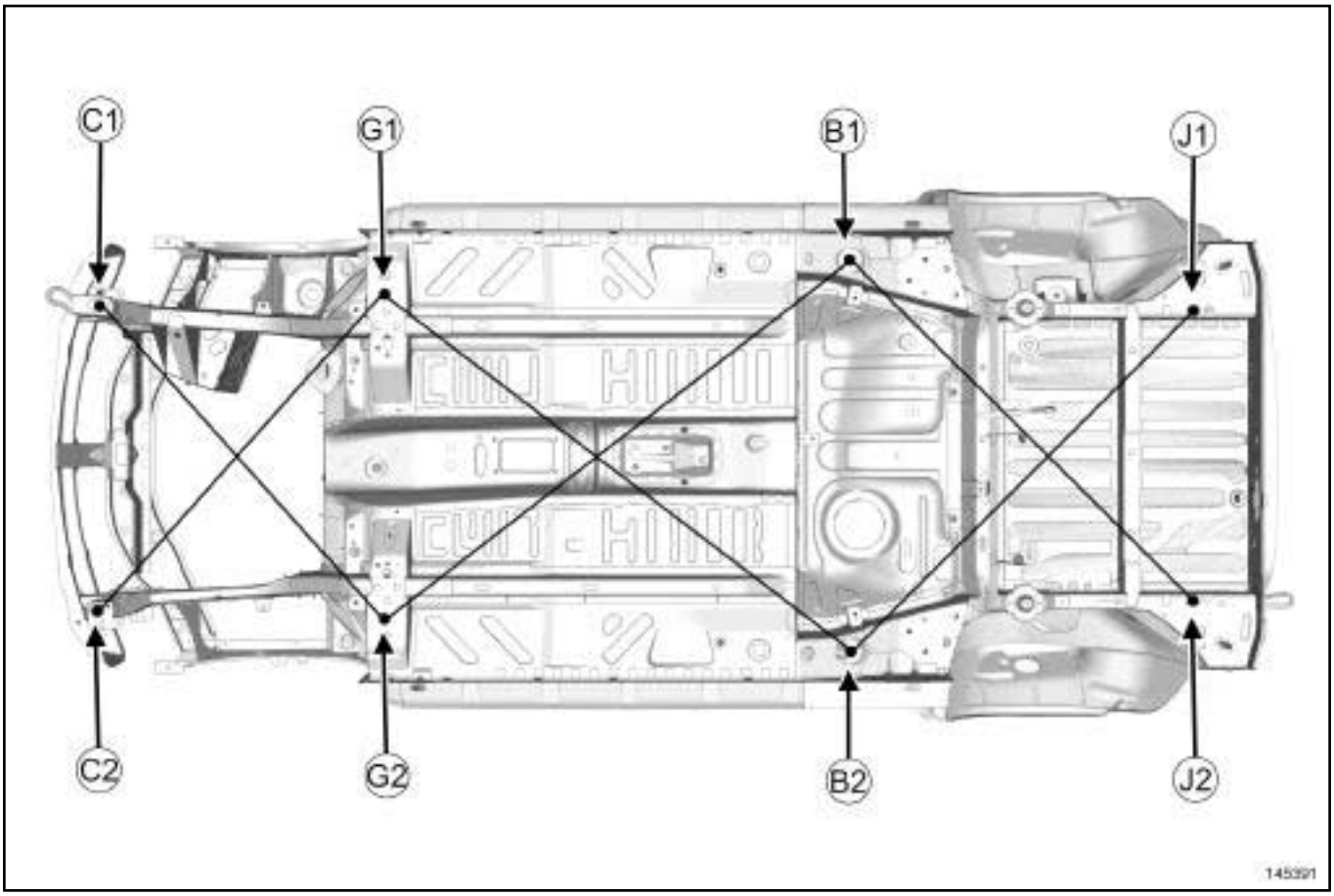

145391

❑

I - CHECKING THE SUBFRAME

Chronological order of checks

❑ FRONT impact

Compare the following distances between diagonally opposite points:

- 1: B1 - G2 = B2 - G1
- 2: G1 - C2 = G2 - C1

❑ REAR impact

Compare the following distances between diagonally opposite points

- 1: G2 - B1 = G1 - B2
- 2: B1 - J2 = B2 - J1

II - DETAILED VIEW OF INSPECTION POINTS

Point B1 - B2

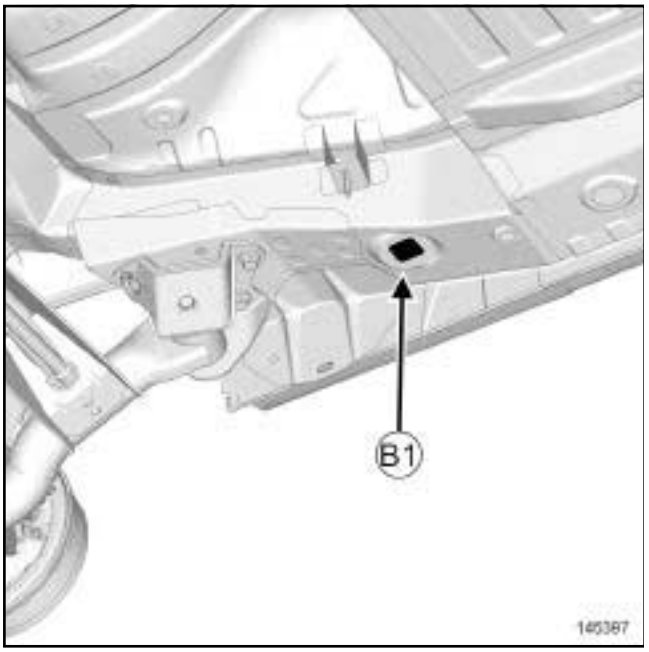

145397

Point G1 - G2

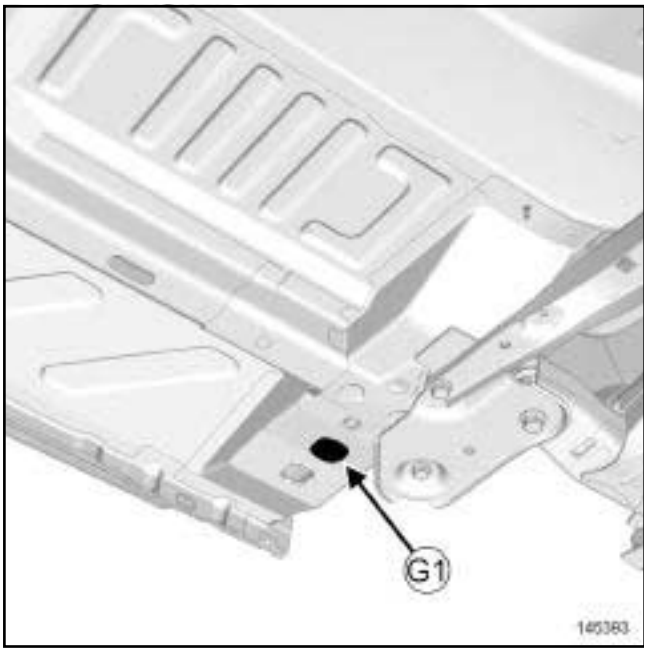

145393

Point C1 - C2

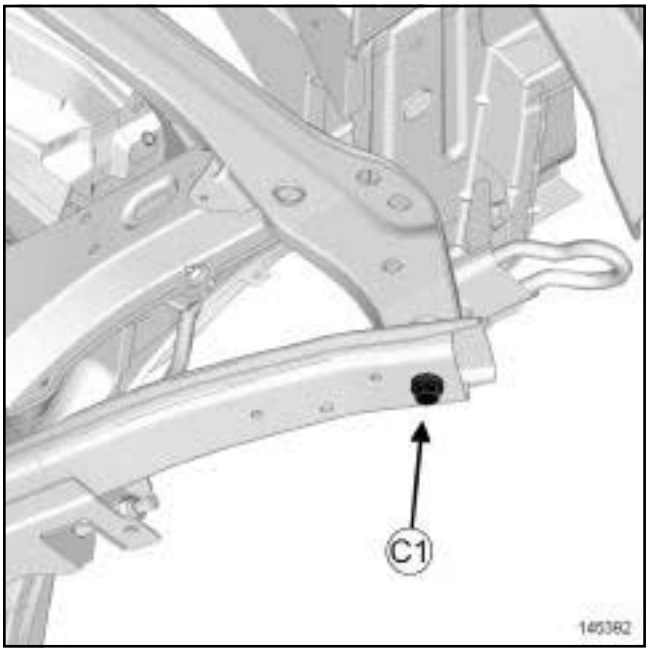

145392

Point J1 - J2

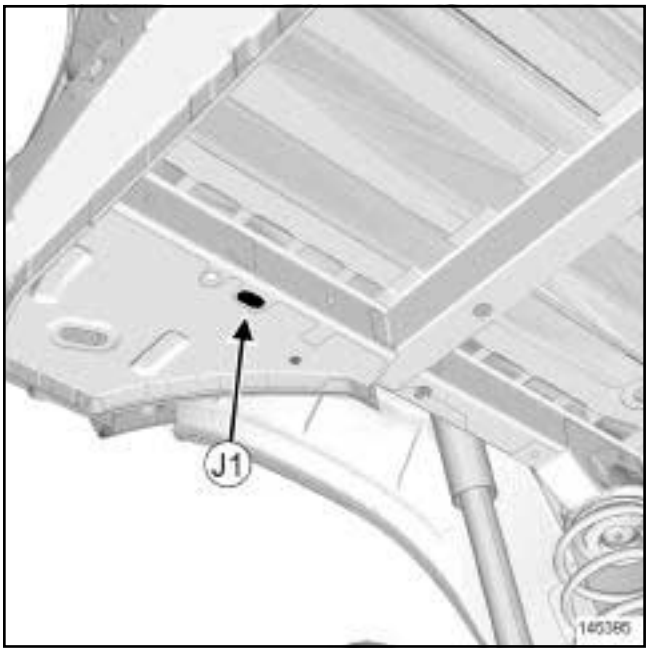

145395

❑

Consumables for mechanical repair:

DEFINITION	PACKAGING	PART NUMBER
MECHANICAL SEALANTS		
SILICOR sealing paste	**85 g** tube	**77 11 236 470**
MASTIXO Joint face seal	**100 g** tube	**77 11 236 172**
BEARING SEALING KIT For crankshaft bearing cap side sealing	Kit	**77 11 237 896**
SILICONE ADHESIVE SEAL Engine and gearbox sealing paste	**100 g** cartridge	**77 11 227 484**
TRANSPARENT SEALING MASTIC	**45 g** tube	**77 11 223 369**
SILICOJOINT	**90 g** tube	**77 11 236 469**
LOCTITE ADHESIVE 597 Sealing paste for PXX gearboxes	Cartridge	**77 11 219 705**
RESIN ADHESIVE or **SEALING RESIN** Sealing resin for engine and gearbox covers	**25 ml** tube	**77 11 237 640**
EXHAUST MASTIC For exhaust pipe union seals	**1.5 kg** tin	**77 01 421 161**
LEAK DETECTOR	**400 ml** aerosol	**77 11 236 176**
ADHESIVES		
FRENETANCHE Sealing the threading at low and medium pressure	**50 ml** bottle	**77 11 236 471**
HIGH-STRENGTH THREADLOCK For locking bolts	**50 ml** bottle	**77 11 230 112**
SEALING RESIN For locking the bearings	**50 ml** bottle	**77 11 236 472**
LUBRICANT CLEANERS		
NÉTELEC Avoid bad contacts in electrical circuits	**150 ml** aerosol	**77 11 225 871**

INJECTOR CLEANER	**355 ml** container	**77 11 224 188** or **77 11 225 539**
CLOTH FOR INJECTION SYSTEM		**77 11 211 707**
SUPER RELEASING AGENT	**500 ml** aerosol	**77 11 236 166**
SUPER RELEASING AGENT	**250 ml** aerosol	**77 11 420 439**
SUPER CLEANER FOR JOINT FACES For cleaning joint faces	**300 ml** aerosol	**77 11 238 181**
SURFACE CLEANER	**5 L** container	**77 01 404 178**
SILICONE LUBRICANT	**500 ml** aerosol	**77 11 236 168**
SILICONE-FREE LUBRICANT	**500 ml** aerosol	**77 11 236 167**
BRAKE CLEANER	**600 ml** aerosol	**77 11 422 413**
	150 ml aerosol	**77 11 422 414**
BIO BRAKE CLEANER	**750 ml** spray bottle	**77 11 427 217**
AIR CONDITIONING CLEANER	**250 ml** aerosol	**77 11 230 498**
CARBURETTOR CLEANER	Aerosol	**77 11 236 177**
IXTAR ENGINE CLEANER	**400 ml** can	**77 11 229 365**
GREASE		
BR2+ GREASE For: - the lower arm bearings, - the anti-roll bar grooves, - the driveshaft splines.	**1 kg** pack	**77 01 421 145**
SILICONE GREASE For: - the tubular rear axle bushes, - the anti-roll bar bushes.	**100 g** tube	**77 11 419 216**
COPPER ANTI-SEIZE GREASE Grease for turbochargers (high temperature)	**85 g** tube	**77 11 236 173**
COPPER-ALUMINIUM LUBRICANT Grease for turbochargers (high temperature)	**500 ml** aerosol	**77 11 236 169**
GREASE For driveshaft seals	**180 g** sachets	**77 11 420 011**

WHITE GREASE For wheel sensors	**400 ml** aerosol	**77 11 236 174**
MULTIPURPOSE GREASE	**500 ml** aerosol	**77 11 236 170**
	250 ml aerosol	**77 11 236 171**
FLUORSTAR 2L Silicone-free electric sealing grease	**100 g** tube	**82 00 168 855**
LACQUER		
JELT ARGENT Varnish for repairing heated rear screens	**5 g** bottle	**77 11 230 111**
BRAKE		
DOT 4, ISO CLASS 6, RENAULT STANDARD: 03-50-006, For vehicles with and without electronic stability program (ESP)	**0.5 L** container	**77 11 218 589**
	5 L container	**77 11 238 318**
	25 L container	**77 11 238 319**
DOT 4, ISO CLASS 4, RENAULT STANDARD: 03-50-005 Authorised for vehicles without ESP	**0.5 L** container	**77 11 172 381**
	5 L container	**77 01 395 503**
	25 L container	**77 11 171 926**
DOT 4 Authorised for vehicles without ESP, without clutch with hydraulic tappet	**0.5 L** container	**86 71 000 000**
	5 L container	**86 71 014 277**
	25 L container	**86 71 014 278**
COOLING SYSTEM		
ANTIFREEZE (TYPE D)	**1 L** container	**77 11 170 548**
COOLANT (TYPE D)	**1 L** container	**77 11 171 589**
	2 L container	**77 11 170 545**
	5 L container	**77 11 170 546**
OIL		
ENGINE OIL	(see **Engine oil: Specifications**) (Technical Note 6013A, 04A, Lubricants)	
GEARBOX OIL	(see **Manual gearbox oil: Specifications**) (Technical Note 6012A, 04A, Lubricants)	
	(see **Automatic gearbox oil: Specifications**) (Technical Note 6012A, 04A, Lubricants)	
	(see **Sequential gearbox oil: Specifications**) (Technical Note 6012A, 04A, Lubricants)	

AXLE OIL	(see **Rear axle oil: Specifications**) (Technical Note 6012A, 04A, Lubricants)	
ELF RENAULT MATIC D2 Oil for power-assisted steering: Pump connected, pump assembly (except Laguna III)	**2 L** container	**77 01 402 037**
TOTAL POWER-ASSISTED STEERING FLUID Oil for power-assisted steering: Pump assembly (Laguna III)	**1 L** container	no part number
PLANETELF PAG 488	**250 ml** container	**77 11 172 668**
SANDEN SP 10 Oil for air conditioning compressor		**77 01 419 313**
UNIVIS J26 Oil for retractable roof hydraulic system	**250 ml** container	**77 11 172 160**
TYRES		
TYRE PASTE	**1 kg** pack	**77 11 223 052**
	5 kg pack	**77 11 223 053**
TYRE REPAIR AGENT	**400 ml** tube	**77 11 221 296**
	300 ml tube	**77 11 222 802**
BLANKING PLUG		
Engine type	Injection type	Part no.
F5R		**77 01 206 382**
F8Q		**77 01 206 340**
F9Q		**77 01 208 229**
G9T AND G9U		**77 01 208 229**
K9K	**DELPHI**	**77 01 206 804**
K9K	**SIEMENS**	**77 01 476 857**
M9R		**77 01 209 062**
P9X		**77 01 474 730**
ZD3		**77 01 208 229**
MISCELLANEOUS		
GREY ABRASIVE PAD		**77 01 405 943**

Consumables for bodywork repair:

HOLLOW SECTION WAX		
SPR CC	**1 L** container	**77 11 172 672**
SPR CC SPRAY	**500 ml** aerosol	**77 11 211 654**
STRUCTURAL ADHESIVE		
STRUCTURAL ADHESIVE	Kit =2 **80 ml** cartridges	**77 11 219 885**
HIGH PERFORMANCE STRUCTURAL ADHESIVE	1 **195 ml** cartridge	**77 11 419 113**
GLAZING PRODUCTS AND ADHESIVES		
MONOPAC EVOLUTION ADHESIVE KIT	**310 ml** cartridge	**77 11 421 430**
MONOPAC EVOLUTION ADDITIONAL CARTRIDGE + NOZZLE	**310 ml** cartridge	**77 11 421 431**
S-P KIT ADHESIVE KIT	**310 ml** cartridge	**77 11 421 432**
ADDITIONAL S-P KIT CARTRIDGE + NOZZLE	**310 ml** cartridge	**77 11 421 433**
BIPAC EVOLUTION ADHESIVE KIT	2 **225 ml** cartridges	**77 11 421 434**
LINT-FREE CLOTH	Box of **340** cloths	**77 11 237 262**
WINDOW SEALING MASTIC	**310 ml** cartridge	**77 11 170 222**
SPECIAL ADHESIVE FOR WINDOWS		**77 11 425 759**
ADHESION PROMOTER For bonding double-sided adhesive tape	Cloth	**77 11 423 222**
MISCELLANEOUS		
DOUBLE-SIDED ADHESIVE	**18 mm** wide	**77 11 226 308**
DOUBLE-SIDED ADHESIVE	**8 mm** wide	**77 11 427 869**
FRENETANCHE	**50 ml** bottle	**77 11 236 471**
ADHESIVE PATCH		**82 00 043 181**
ADHESIVE PAD		**77 05 042 163**
SEALS		
BLACK MJ PRO (Electroweldable)	**310 ml** cartridge	**77 11 172 676**
WHITE MJ PRO II (Electroweldable)	**310 ml** cartridge	**77 11 426 951**

PREFORMED SEALING MASTIC BEAD	**2.6 m** roll	**77 01 423 330**
BRUSH MASTIC	**1 kg** pack	**77 11 228 113**
FILLER MASTIC	60 beads **Ø 6 mm by 0.3 m**	**77 11 170 230**
GREASE		
WHITE GREASE	**400 ml** aerosol	**77 11 236 174**
OPENING ELEMENT MECHANISM GREASE	**20 g** sachets	**77 11 419 865**
SILICONE LUBRICANT	**500 ml** aerosol	**77 11 236 168**
SILICONE-FREE LUBRICANT	**500 ml** aerosol	**77 11 236 167**
SOUNDPROOFING		
SPR GREY EVOLUTION	**1 l** cartridge	**77 11 419 114**
SPR GREY EVOLUTION SPRAY	**400 ml** aerosol	**77 11 419 116**
SPR BLACK EVOLUTION II	**1 l** cartridge	**77 11 419 115**
SOUNDPROOFING PAD (3.5 Kg/m²)	Pack of **10**	**77 01 423 546**
SOUNDPROOFING PAD (6.5 Kg/m²)	Pack of **5**	**77 01 423 269**
POLISHING		
POLISHING LIQUID	**1 L** container	**77 11 420 288**
FINISHING LIQUID	**1 L** container	**77 11 420 289**
MASTIC		
Universal mastic		
GALAXI	**2.5 kg** pack	**77 11 172 238**
OPTIMAX	**1.23 l** cartridge	**77 11 172 239**
EXCELLENCE +	**960 g** cartridge	**77 11 423 539**
For finishing plastic repair	**1 kg** pack	**77 11 423 540**
Plugging mastic		
XFIBRE FIBREGLASS MASTIC	**975 kg** pack	**77 11 172 235**
STANDARD BASIX POLYESTER MASTIC	**1.975 kg** pack	**77 11 172 234**
ALUX ALUMINIUM MASTIC	**975 kg** pack	**77 11 172 236**
Sprayable mastic		

PIXTO SPRAYABLE POLYESTER MASTIC	**1.5 kg** tin	**77 11 172 237**
Finishing mastic		
IXTRA POLYESTER MASTIC	**1.625 kg** pack	**77 11 172 233**
Anti-grit mastic		
MAG PRO 1	**310 ml** cartridge	**77 11 172 679**
MAG PRO 3 (Dual component)	**1.5 kg** tin	**77 11 218 364**
SURFACE CLEANER		
HEPTANE	**500 ml** container	**77 11 170 064**
SOLVENT SURFACE CLEANER	**5 L** container	**77 01 404 178**
WATER-BASED SURFACE CLEANER	**5 L** container	**77 11 421 337**
ANTISTATIC THINNER (for plastic materials)	**400 ml** aerosol	**77 01 408 493**
COMPOSITE MATERIAL REPAIR BY BONDING		
PLASTIC REPAIR KIT		**77 11 170 064**
NOZZLE FOR PLASTIC REPAIR KIT		**77 11 423 523**
PLASTIC REPAIR CLEANER	**1 L** container	**77 11 423 517**
PLASTIC REPAIR PRIMER	**150 ml** bottle	**77 11 423 518**
PLASTIC REPAIR ADHESIVE	**2 x 25 ml** bicomponent cartridge	**77 11 423 519**
PLASTIC REPAIR CLOTH	**90 m** roller	**77 11 423 520**
PLASTIC REPAIR NOZZLES	**12** nozzles	**77 11 423 522**
COMPOSITE MATERIAL REPAIR BY WELDING		
PLASTIC WELD REPAIR SET		**77 11 425 742**
PROTECTIVE STRIPS	Bag of **10** protective strips	**77 11 425 744**
STAINLESS STEEL MESH	Bag of **2** meshes	**77 11 425 743**
COOLER	**400 ml** aerosol	**77 11 425 745**
BRUSH	Box of **10** brushes	**77 11 237 793**
WINDOW MASKING TAPE		
10 MM WINDSCREEN TAPE		**77 11 171 708**
20 MM WINDSCREEN TAPE		**77 11 171 709**
PROTECTIVE WELDING		

ANTI-SPLASH SPRAY	**400 ml** aerosol	**77 11 218 270**
SPECIFIED UNDERCOAT		
PRE-TREATMENT PRIMER WITHOUT ZINC CHROMATE (I-Alpha) + **THINNER**	**1 L** container	**77 11 420 027** (Primer)
		77 11 420 028 (Thinner)
I-PREMIA REACTIVE PRIMER (do not use on aluminium)	**3.5 l** container	**77 11 239 243** (Primer)
		77 11 228 654 (Thinner)
I-PREMIA REACTIVE PRIMER (do not use on aluminium)	**400 ml** aerosol	**77 11 419 416**
ADHÉRA SPRAY (adhesion promoter for thermoplastics)	**400 ml** aerosol	**77 11 423 734**
PRIMARA BLACK (adhesion promoter/primer for thermoplastics)	**1 L** container	**77 11 423 735**
		77 11 171 514 (Activator)
PRIMARA (adhesion promoter/primer for thermoplastics)	**1 L** container	**77 11 171 513**
		77 11 171 514 (Activator)
UNDERCOAT		
LEVIA	**3.5 l** container	**77 11 228 651**
FORTIA	**3.5 l** container	**77 11 228 650**

RENAULT

1 Engine and peripherals

10A ENGINE AND CYLINDER BLOCK ASSEMBLY

11A TOP AND FRONT OF ENGINE

12A FUEL MIXTURE

12B TURBOCHARGING

13A FUEL SUPPLY

13B DIESEL INJECTION

13C PREHEATING

14A ANTIPOLLUTION

16A STARTING - CHARGING

17A IGNITION

17B PETROL INJECTION

X79

NOVEMBER 2009 EDITION ANGLAISE

"The repair procedures given by the manufacturer in this document are based on the technical specifications current when it was prepared.

The procedures may be modified as a result of changes introduced by the manufacturer in the production of the various component units and accessories from which the vehicles are constructed".

All rights reserved by Renault.

Copying or translating, in part or in full, of this document or use of the service part reference numbering system is forbidden without the prior written authority of Renault.

© Renault s.a.s 2007

19A COOLING

19B EXHAUST

19C TANK

19D ENGINE MOUNTING

X79

NOVEMBER 2009 **EDITION ANGLAISE**

"The repair procedures given by the manufacturer in this document are based on the technical specifications current when it was prepared.

The procedures may be modified as a result of changes introduced by the manufacturer in the production of the various component units and accessories from which the vehicles are constructed".

All rights reserved by Renault.

Copying or translating, in part or in full, of this document or use of the service part reference numbering system is forbidden without the prior written authority of Renault.

© Renault s.a.s 2007

DUSTER - Chapitre 1

Contents

Pages

10A ENGINE AND CYLINDER BLOCK ASSEMBLY

Crankshaft seal on timing end: Removal - Refitting 10A-1

Crankshaft seal, gearbox end: Removal - Refitting 10A-5

Lower cover: Removal - Refitting 10A-9

Conrod bearing shell: Removal - Refitting 10A-24

Engine oil: Draining - Refilling 10A-32

Oil filter: Removal - Refitting 10A-34

Oil-coolant heat exchanger: Removal - Refitting 10A-37

Oil pressure sensor: Removal - Refitting 10A-42

Oil pump: Removal - Refitting 10A-44

Oil pressure: Check 10A-46

Multifunction support: Removal - Refitting 10A-48

Engine - gearbox assembly: Removal - Refitting 10A-54

Flywheel: Removal - Refitting 10A-75

11A TOP AND FRONT OF ENGINE

Pressure at end of compression: Check 11A-1

Accessories belt: Removal - Refitting 11A-2

Crankshaft accessories pulley: Removal - Refitting 11A-10

Timing belt: Removal - Refitting 11A-17

Rocker cover: Removal - Refitting 11A-42

Camshaft: Removal - Refitting 11A-49

Camshaft seal, timing end: Removal - Refitting 11A-56

Oil decanter: Removal - Refitting 11A-68

12A FUEL MIXTURE

Air inlet: Description 12A-1

Air resonator: Removal - Refitting 12A-2

Air filter: Removal - Refitting 12A-3

Air filter unit: Removal - Refitting 12A-6

Air flowmeter: Removal - Refitting 12A-10

Contents

12A FUEL MIXTURE

Throttle valve: Removal - Refitting 12A-11

Inlet distributor: Removal - Refitting 12A-12

Injector holder shim: Removal - Refitting 12A-14

Exhaust manifold: Removal - Refitting 12A-16

12B TURBOCHARGING

Turbocharger: Removal - Refitting 12B-1

Turbocharger oil pipe: Removal - Refitting 12B-4

Intercooler: Removal - Refitting 12B-8

13A FUEL SUPPLY

Fuel circuit: Operating diagram 13A-1

Manual priming pump: Removal - Refitting 13A-3

Diesel filter: Removal - Refitting 13A-5

Fuel pressure: Check 13A-9

Fuel flow: Check 13A-11

13B DIESEL INJECTION

Diesel injection: List and location of components 13B-1

Diesel injection computer: Removal - Refitting 13B-5

Camshaft position sensor: Removal - Refitting 13B-7

13B DIESEL INJECTION

Crankshaft position sensor: Removal - Refitting 13B-8

High pressure pump: Removal - Refitting 13B-9

Flow actuator: Removal - Refitting 13B-14

Venturi: Removal - Refitting 13B-16

High pressure pipe: Check 13B-18

High pressure pipe between pump and rail: Removal - Refitting 13B-19

High pressure pipe between rail and injector: Removal - Refitting 13B-22

Injector rail: Removal - Refitting 13B-25

Fuel temperature sensor: Removal - Refitting 13B-28

Injector leak flow: Check 13B-30

Diesel injector: Removal - Refitting 13B-32

Accelerometer: Removal - Refitting 13B-37

13C PREHEATING

Pre-postheating unit: Removal - Refitting 13C-1

Heater plugs: Removal - Refitting 13C-2

14A ANTIPOLLUTION

Exhaust gas recirculation: List and location of components 14A-1

Fuel vapour absorber: Removal - Refitting 14A-2

Contents

14A ANTIPOLLUTION

Exhaust gas recirculation solenoid valve: Removal - Refitting 14A-4

Exhaust gas cooler: Removal - Refitting 14A-7

Exhaust gas recirculation assembly: Removal - Refitting 14A-9

Exhaust gas recirculation rigid pipe: Removal - Refitting 14A-12

16A STARTING - CHARGING

Alternator: Removal - Refitting 16A-1

Starter: Removal - Refitting 16A-8

Alternator pulley: Removal - Refitting 16A-12

17A IGNITION

Coils: Removal - Refitting 17A-1

17B PETROL INJECTION

Petrol injection: List and location of components 17B-1

Oxygen sensors: Removal - Refitting 17B-4

Throttle valve potentiometer: Removal -Refitting 17B-6

Petrol injection computer: Removal - Refitting 17B-7

Crankshaft position sensor: Removal - Refitting 17B-9

Injector rail - Injectors: Removal - Refitting 17B-10

19A COOLING

Engine cooling system: Operating diagram 19A-1

Engine cooling system: Specifications 19A-2

Engine cooling system: Check 19A-3

Engine cooling circuit: List and location of components 19A-5

Cooling system: Draining - Refilling 19A-6

Cooling radiator: Removal - Refitting 19A-9

Coolant pump: Removal - Refitting 19A-13

Thermostat: Removal - Refitting 19A-19

Water chamber: Removal - Refitting 19A-22

Engine cooling fan assembly: Removal - Refitting 19A-27

Coolant pump inlet pipe: Removal - Refitting 19A-34

Expansion bottle: Removal - Refitting 19A-38

Coolant temperature sensor: Removal - Refitting 19A-40

19B EXHAUST

Exhaust: List and location of components 19B-1

Exhaust: Precautions for the repair 19B-6

Catalytic converter: Removal - Refitting 19B-10

Expansion chamber: Removal - Refitting 19B-17

Contents

19B EXHAUST

Intermediate pipe: Removal - Refitting 19B-18

Silencer: Removal - Refitting 19B-20

19C TANK

Fuel tank: Draining 19C-1

Fuel tank: Removal - Refitting 19C-3

Fuel level sensor module: Removal - Refitting 19C-8

19D ENGINE MOUNTING

Suspended engine mounting: Tightening torque 19D-1

Left-hand suspended engine mounting: Removal - Refitting 19D-2

Right-hand suspended engine mounting: Removal - Refitting 19D-4

Lower engine tie-bar: Removal - Refitting 19D-8

K9K

REMOVAL

I - REMOVAL PREPARATION OPERATION

❑ Position the vehicle on a two-post lift (see **Vehicle: Towing and lifting**) (02A, Lifting equipment).

❑ Disconnect the battery (see **Battery: Removal - Refitting**) (80A, Battery).

❑ Remove:

- the front right-hand wheel (see **Wheel: Removal - Refitting**) (35A, Wheels and tyres),
- the timing belt (see **11A**, **Top and front of engine**, **Timing belt: Removal - Refitting**, page **11A-17**) ,
- the timing belt sprocket (see **11A**, **Top and front of engine**, **Timing belt: Removal - Refitting**, page **11A-17**) .

II - REMOVAL OPERATION

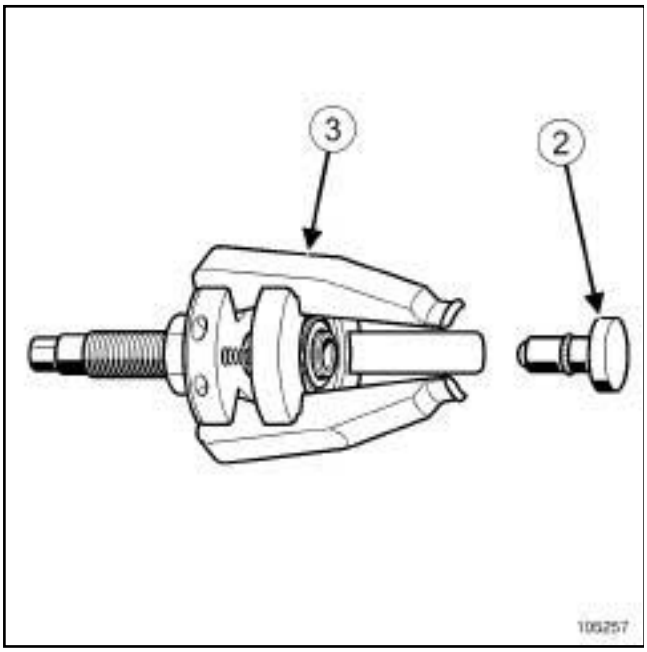

105257

❑ Fit the end piece (**2**) onto the tool (**3**) .

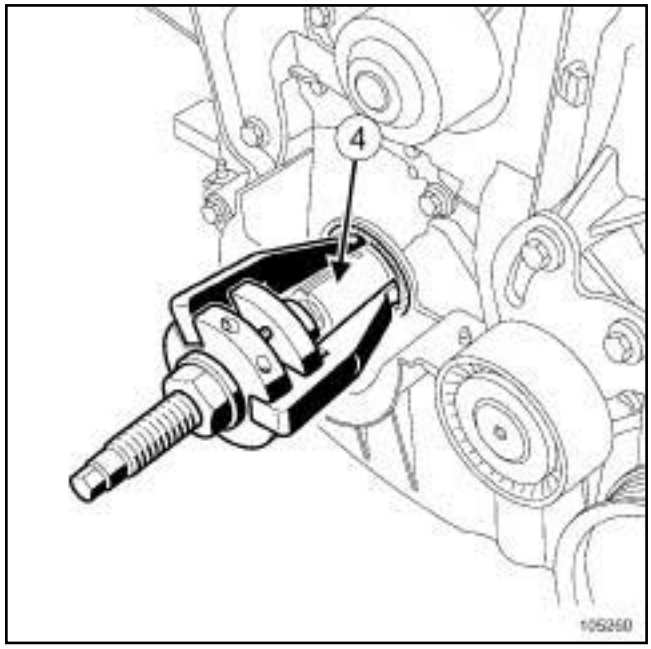

105260

❑ Position the jaws of the toolonto the crankshaft nose (**4**) .

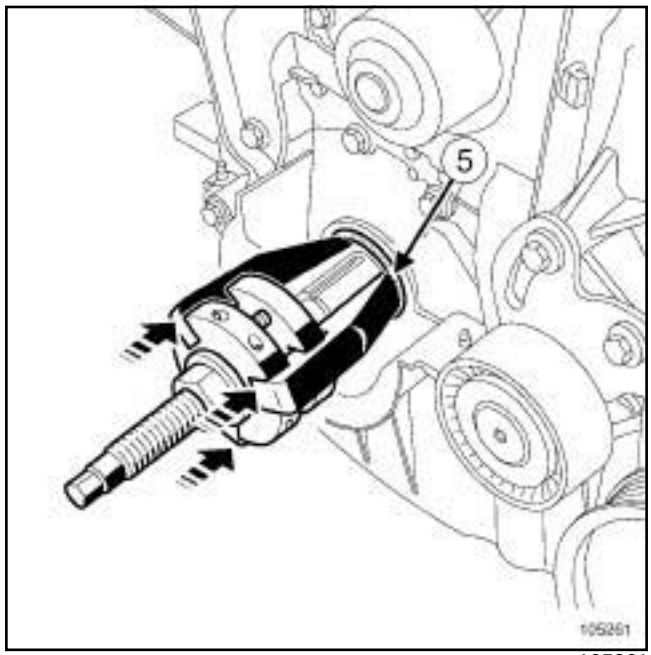

105261

❑ Push on the tooluntil contact is made between the ends (**5**) of the jaws and the crankshaft seal.

K9K

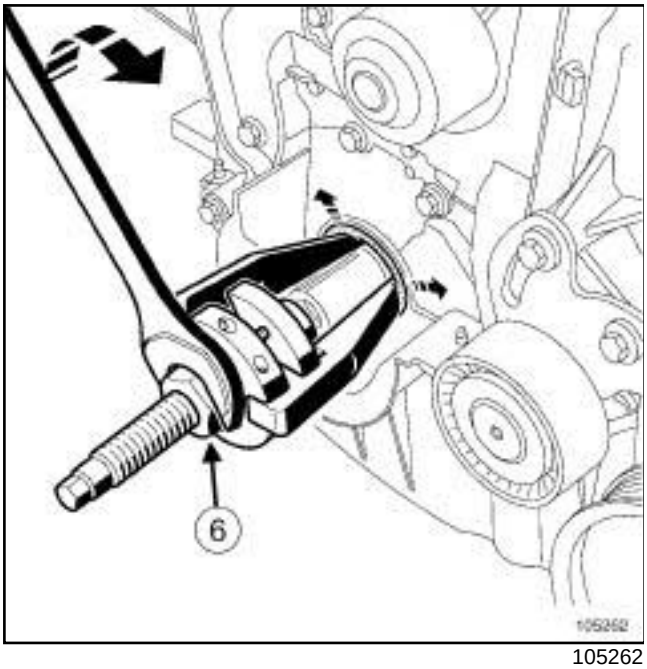

105262

❑ Separate the jaws by screwing the nutof the tool (**6**) .

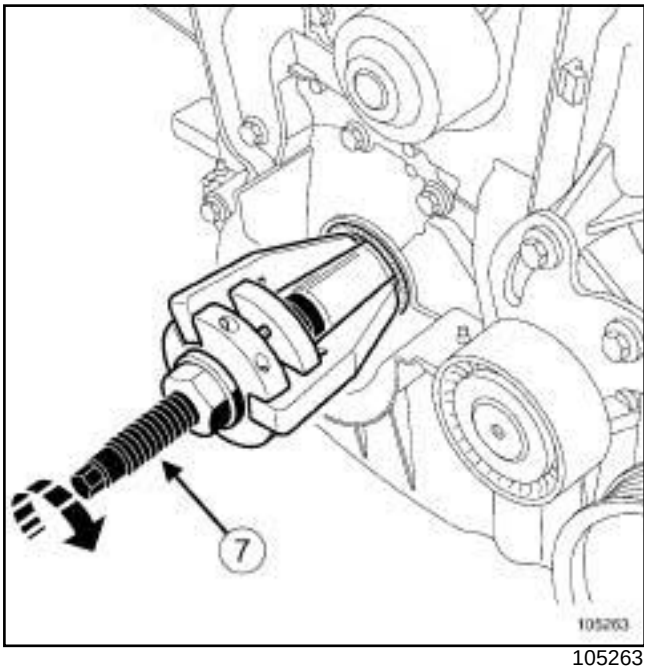

105263

❑ Screw down the threaded rod (**7**) of the.

❑ Refit the crankshaft seal at the timing end using the tool.

REFITTING

I - REFITTING PREPARATION OPERATION

❑ **parts always to be replaced: Crankshaft seal on timing end**.

> **WARNING**
> To ensure proper sealing, the gasket surfaces must be clean, dry and not greasy (avoid any finger marks).

❑ Use **SURFACE CLEANER** (see **Vehicle: Parts and consumables for the repair**) (04B, Consumables - Products) to clean and degrease:

- the crankshaft seal mating face,

- the crankshaft seal housing in the crankshaft closure panel.

II - REFITTING OPERATION

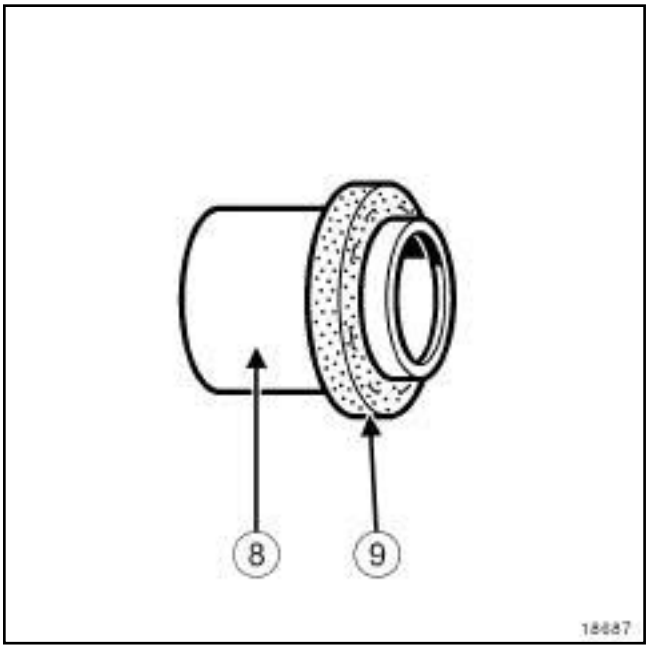

18687

❑

> Note:
>
> This type of seal is extremely fragile.
>
> Only touch the protective part (**8**) when handling the gasket. It is strictly forbidden to touch the seal (**9**) ; this is to prevent any oil leaks once the oil seal is fitted to the engine.

K9K

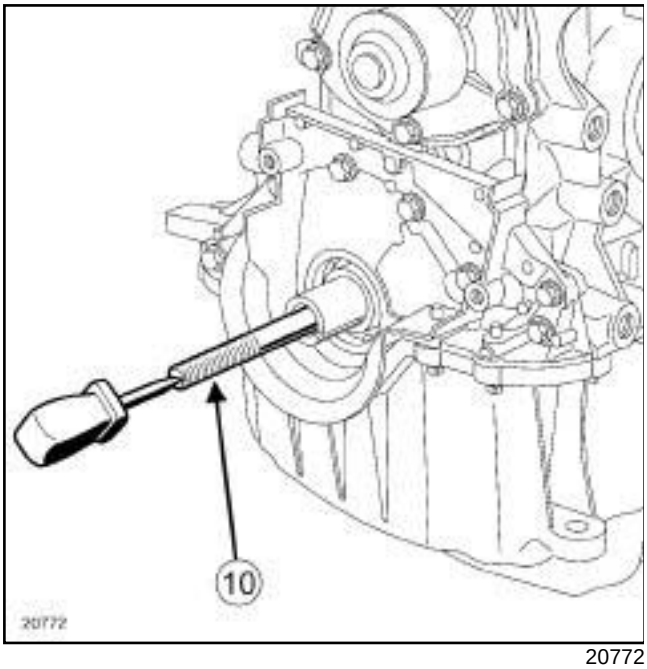

20772

❑ Screw the threaded rod (**10**) of theinto the crankshaft.

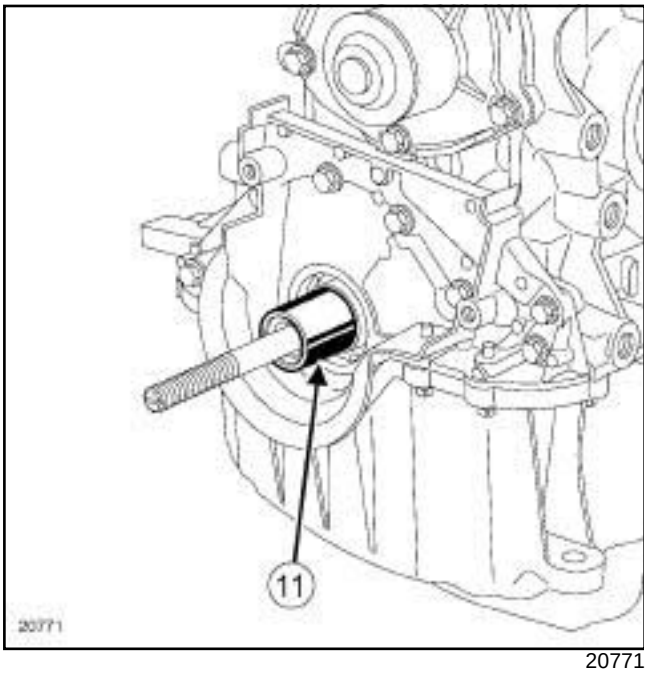

20771

❑ On the crankshaft, fit the spacer (**11**) of the.

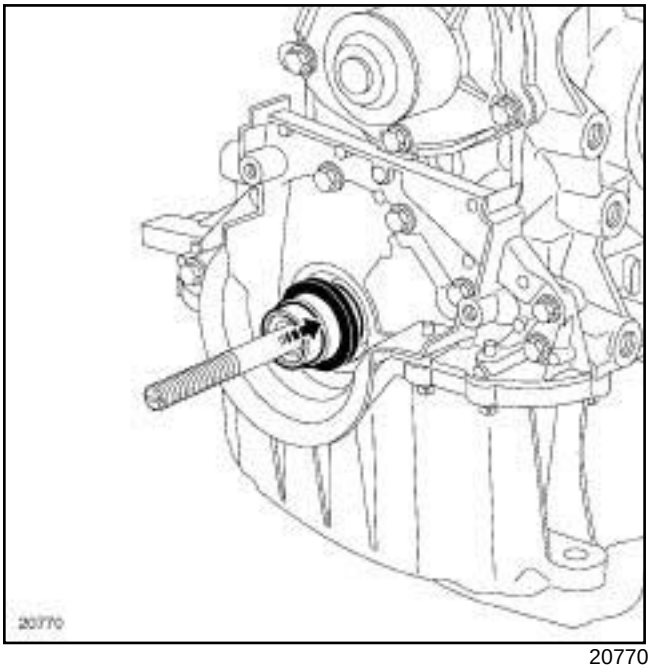

20770

❑ Fit the protector with the new seal in place on the spacer, taking care not to touch the seal.

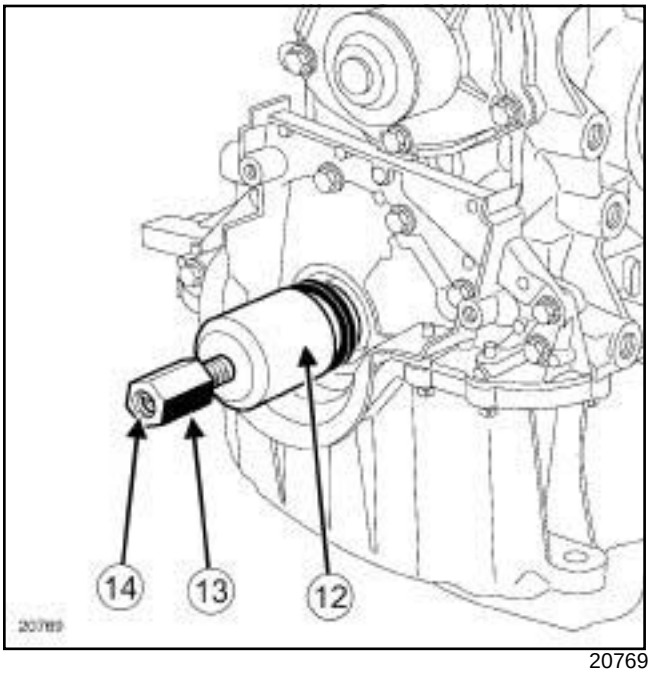

20769

❑ Fit the cover (**12**) and nut (**13**) (with the thread (**14**) of the nut towards the outside of the engine) of the.

K9K

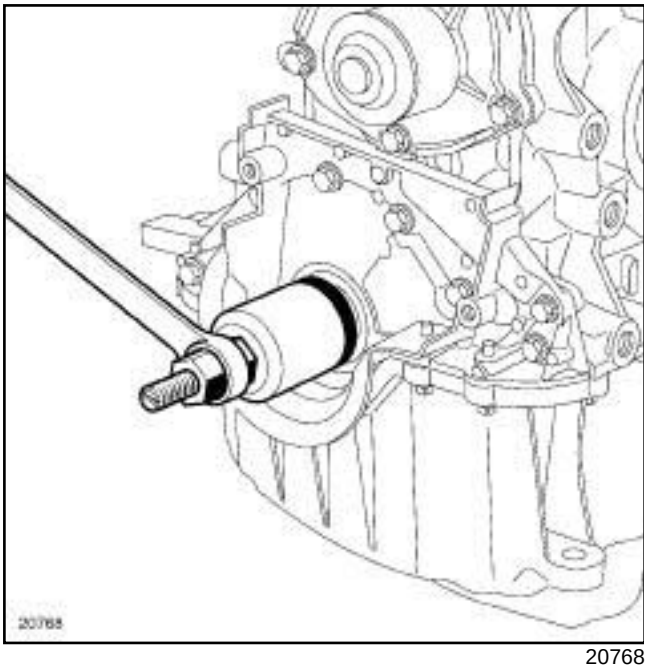

20768

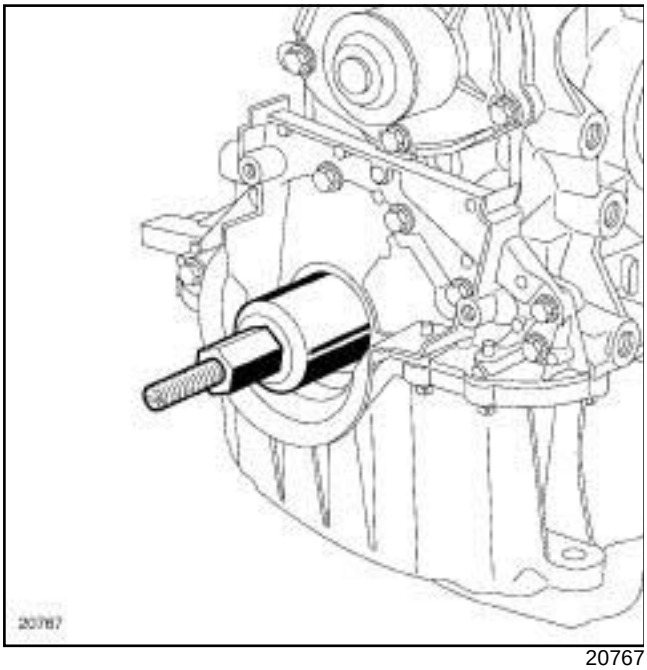

20767

❑ Screw on the nut until the cover touches the spacer.

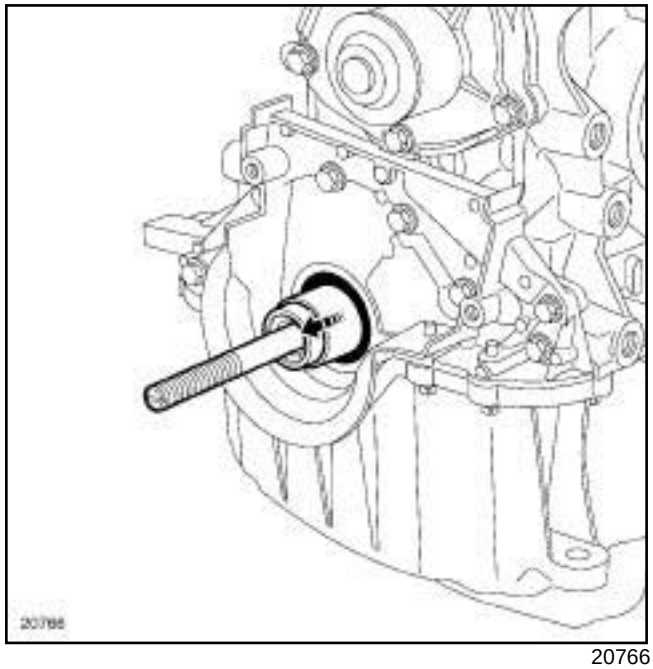

20766

❑ Remove the nut, the cup, the protector and the threaded rod.

III - FINAL OPERATION

❑ Refit:

- the timing belt sprocket (see **11A**, **Top and front of engine**, **Timing belt: Removal - Refitting**, page **11A-17**) ,
- the timing belt (see **11A**, **Top and front of engine**, **Timing belt: Removal - Refitting**, page **11A-17**) ,
- the front right-hand wheel (see **Wheel: Removal - Refitting**) (35A, Wheels and tyres).

❑ Connect the battery (see **Battery: Removal - Refitting**) (80A, Battery).

K4M or K9K

REMOVAL

I - REMOVAL PREPARATION OPERATION

❑ Position the vehicle on a two-post lift (see **Vehicle: Towing and lifting**) (02A, Lifting equipment).

❑ Disconnect the battery (see **Battery: Removal - Refitting**) (80A, Battery).

❑ Remove:

- the gearbox (see **Manual gearbox: Removal - Refitting**) (21A, Manual gearbox),
- the clutch (see **Pressure plate - Disc: Removal - Refitting**) (20A, Clutch),
- the flywheel (see **10A**, **Engine and cylinder block assembly**, **Flywheel: Removal - Refitting**, page **10A-75**) (20A, Clutch).

II - REMOVAL OPERATION

K4M

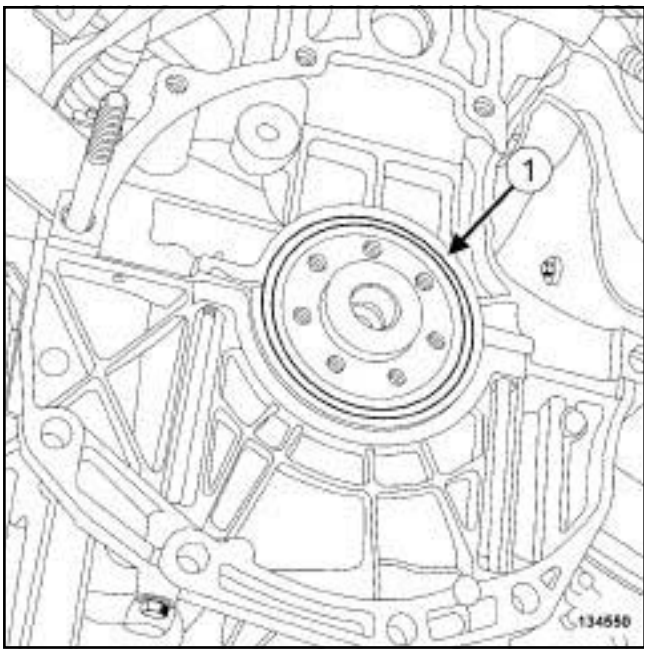

134550

❑ Remove the crankshaft seal (**1**) at the gearbox end using a screwdriver.

> Note:
>
> Take care not to damage the crankshaft mating face.

K9K

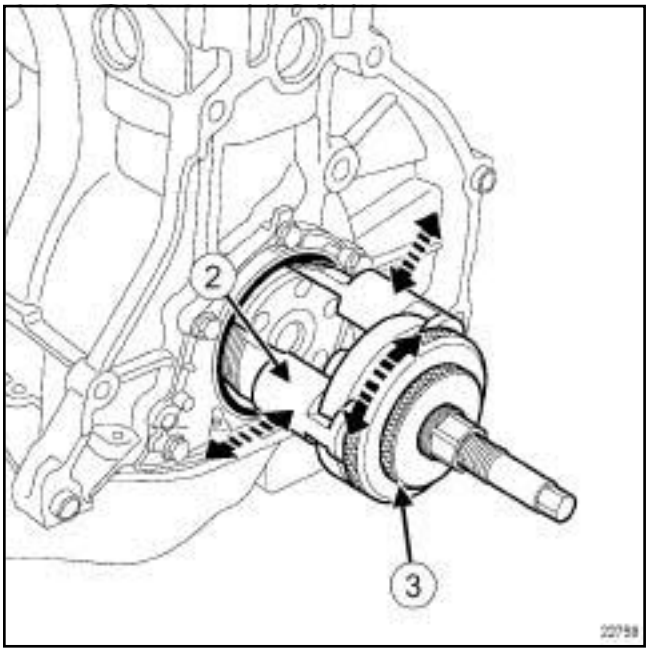

22759

❑ Fit the extractorto the shaft, adjusting the fingers (**2**) to the diameter of the shaft using the knurled plate (**3**) .

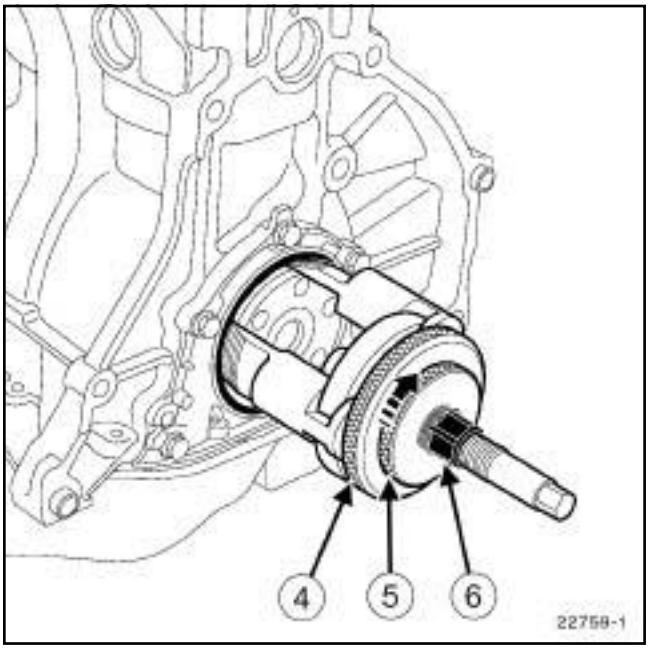

22759-1

❑ Screw knurled plate (**5**) until it is locked to knurled plate (**4**) to keep the fingers in position on the shaft.

❑ Screw the extractor into the seal using the hexagonal nut (**6**) .

K4M or K9K

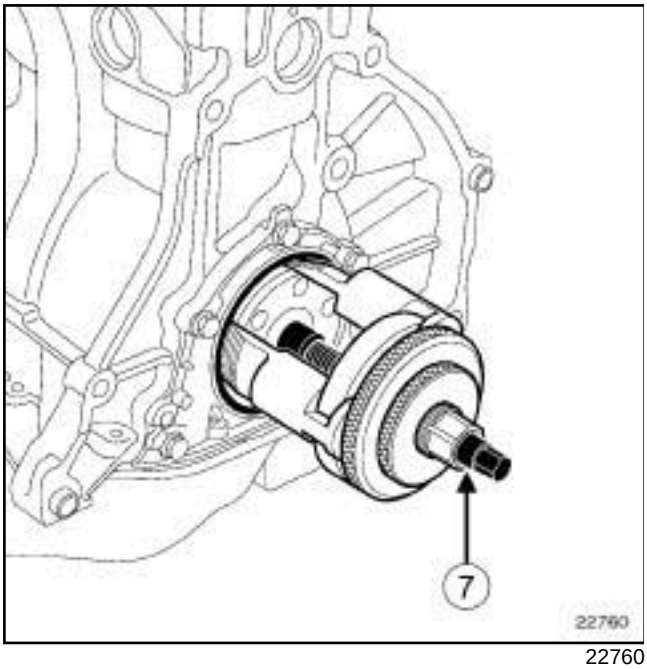

22760

❑ Extract the crankshaft seal at the gearbox end by screwing the threaded rod (**7**) .

REFITTING

I - REFITTING PREPARATION OPERATION

❑ **parts always to be replaced: Crankshaft seal on gearbox end**.

> **WARNING**
> To ensure proper sealing, the gasket surfaces must be clean, dry and not greasy (avoid any finger marks).

❑ Use **SURFACE CLEANER** (see **Vehicle: Parts and consumables for the repair**) (04B, Consumables - Products) to clean and degrease:

- the crankshaft seal mating face,
- the crankshaft seal housing on the cylinder block.

II - REFITTING OPERATION

K9K

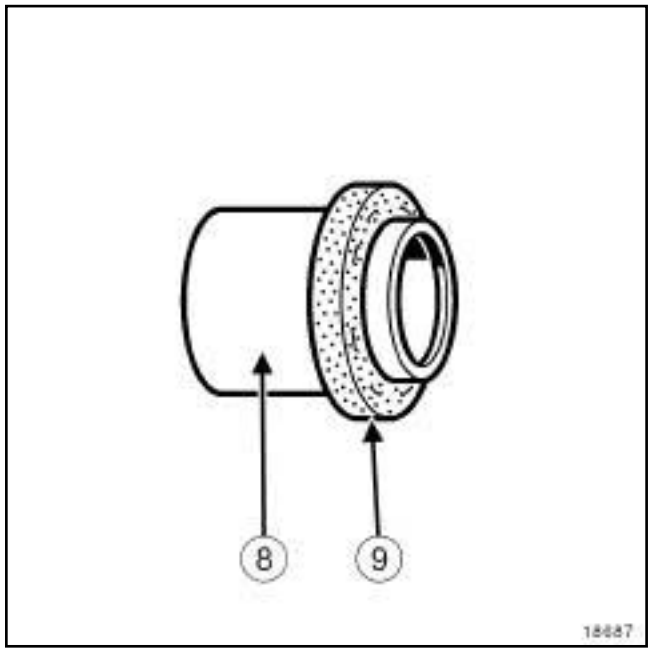

18687

❑

> Note:
> This type of seal is extremely fragile.
> Only touch the protective part (**8**) when handling the gasket. It is strictly forbidden to touch the seal (**9**) ; this is to prevent any oil leaks once the oil seal is fitted to the engine.

K4M or K9K

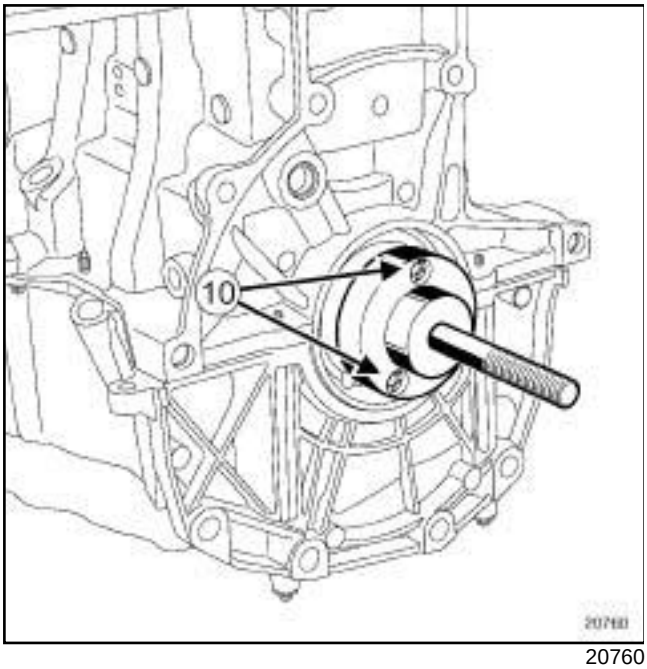

20760

❑ Mount theon the crankshaft, securing it using bolts (**10**) .

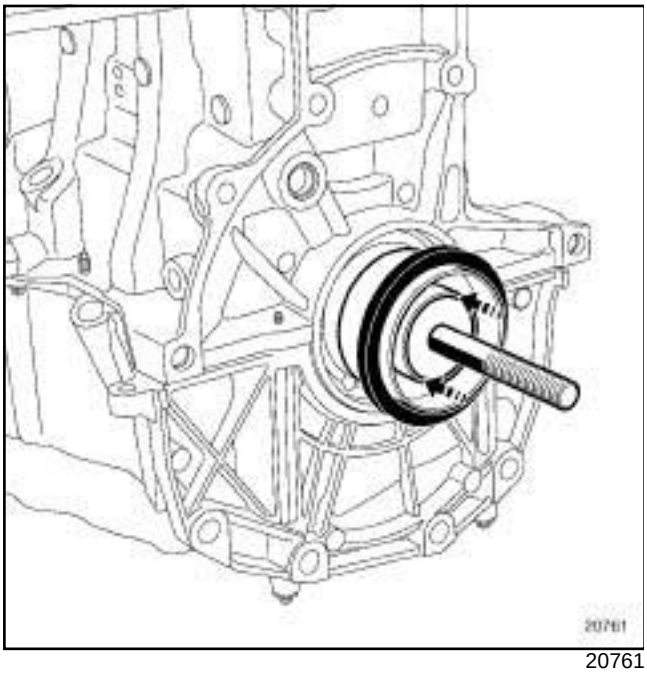

20761

❑ Fit the protector with its seal in place on the, taking care not to touch the seal.

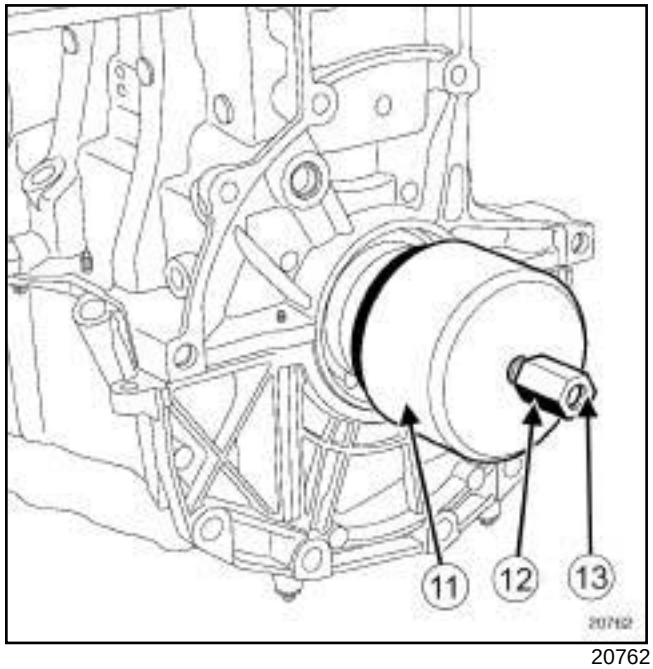

20762

❑ Fit the cover (**11**) and nut (**12**) (with the thread (**13**) of the nut towards the outside of the engine) of the.

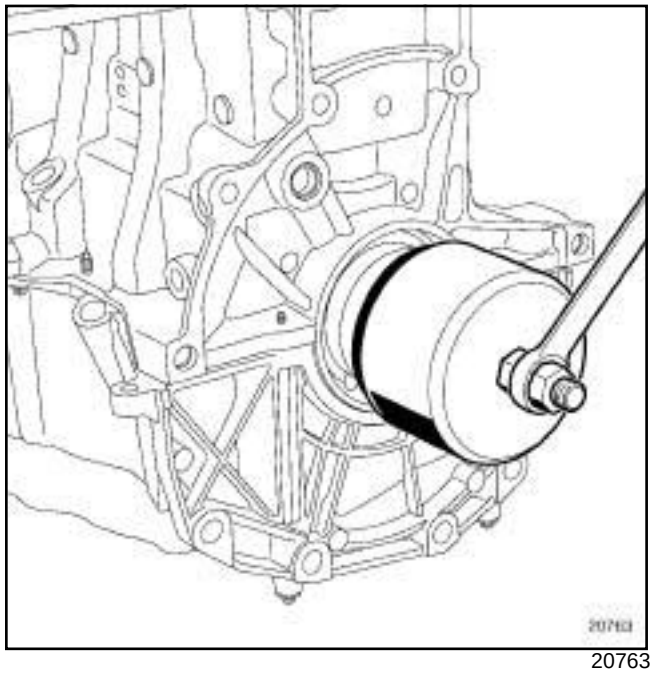

20763

❑ Tighten the nut until the cover touches the cylinder block.

K4M or K9K

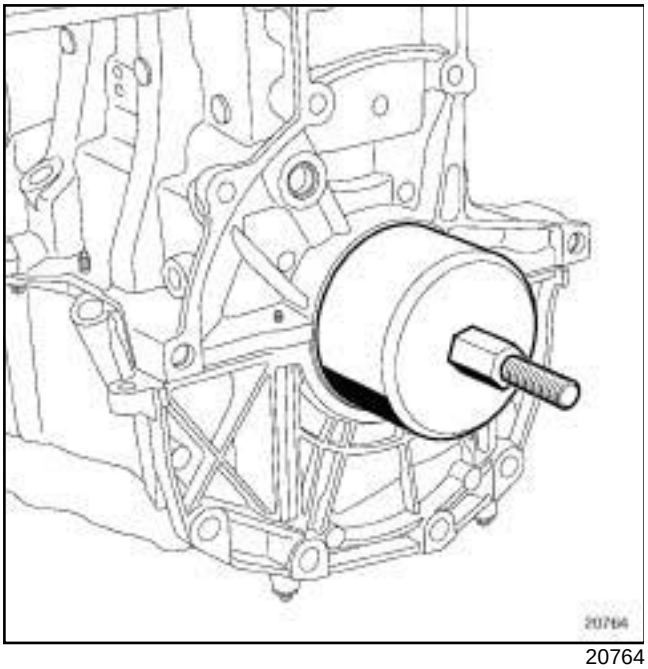

20764

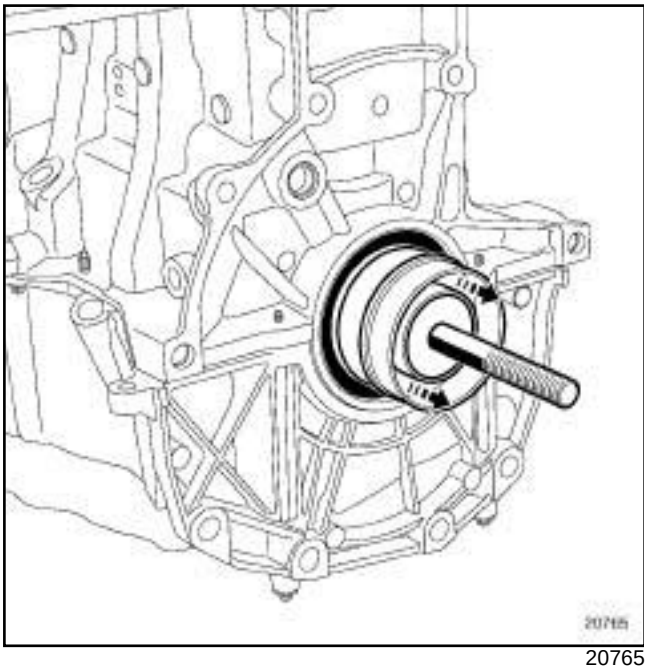

20765

❑ Remove the nut, the cover, the protector and the base plate.

K4M

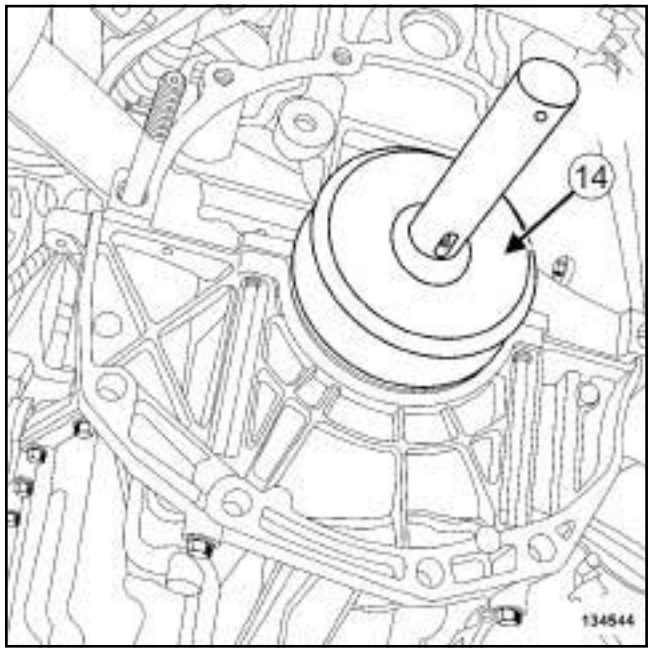

134544

❑ Refit the crankshaft seal at the gearbox end, using the tool (**14**) .

III - FINAL OPERATION

❑ Refit:

- the flywheel (see **10A**, **Engine and cylinder block assembly**, **Flywheel: Removal - Refitting**, page **10A-75**) (20A, Clutch),
- the clutch (see **Pressure plate - Disc: Removal - Refitting**) (20A, Clutch),
- the gearbox (see **Manual gearbox: Removal - Refitting**) (21A, Manual gearbox).

❑ Connect the battery (see **Battery: Removal - Refitting**) (80A, Battery).

❑ Perform the following operations:

- fill the manual gearbox (see **Manual gearbox oils: Draining - Filling**) (21A, Manual gearbox),
- bleed the clutch control circuit (see **Clutch circuit: Bleed**) (37A, Mechanical component controls).

K9K

Special tooling required	
Tav. 1747	Threaded rods for carrying out subframe operations.

Tightening torques ▽	
oil pump bolts	**25 N.m**
sump bolts on the cylinder block	**14 N.m**
sump bolts on the gearbox	**44 N.m**
sump bolts on the multi-function support	**25 N.m**
power assisted steering pump support bolt on the sump	**25 N.m**
bracket bolts	**62 N.m**
relay bearing bolts	**44 N.m**
right-hand driveshaft flange bolt(s) on the relay bearing	**21 N.m**
front axle subframe tie-rod upper bolts	**21 N.m**
power-assisted steering low pressure pipe bolt on the front axle subframe	**25 N.m**

REMOVAL

I - REMOVAL PREPARATION OPERATION

❏ Position the vehicle on a two-post lift (see **Vehicle: Towing and lifting**) (02A, Lifting equipment).

❏ Remove the front bumper (see **Front bumper assembly: Exploded view**) and (see **Exterior body front trim assembly: Exploded view**) (55, Exterior protection).

❏ Remove:

- the engine undertray bolts,
- the engine undertray.

❏ Drain the engine oil (see **10A**, **Engine and cylinder block assembly**, **Engine oil: Draining - Refilling**, page **10A-32**) .

❏ Remove:

- the front wheels (see **Wheel: Removal - Refitting**) (35A, Wheels and tyres),
- the front wheel arch side liners,
- the lower engine tie-bar (see **19D**, **Engine mounting**, **Lower engine tie-bar: Removal - Refitting**, page **19D-8**) .

❏ Extract the lower arm ball joints from the stub axle carrier (see **Front driveshaft lower arm: Removal - Refitting**) (31A, Front axle components).

❏ Remove (see **Steering box: Removal - Refitting**) (36A, Steering assembly):

- the heat shield bolts on the steering box,
- the steering box heat shield,
- the steering box bolts on the front axle subframe.

❏ Attach the steering rack to the body.

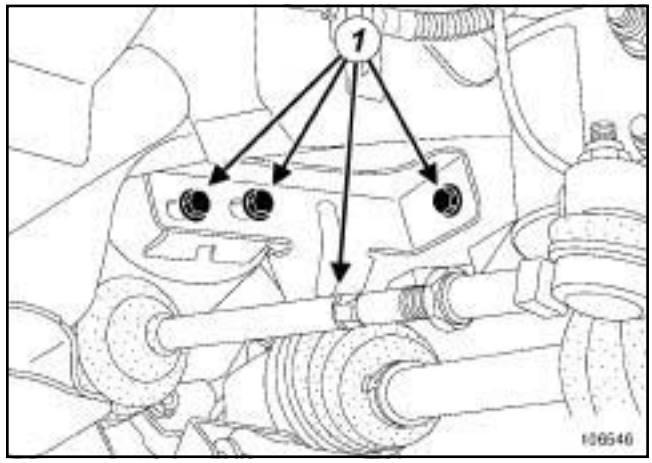

106546

❏ Remove:

- the catalytic converter upstream strut bolts (**1**) ,
- the catalytic converter upstream strut.

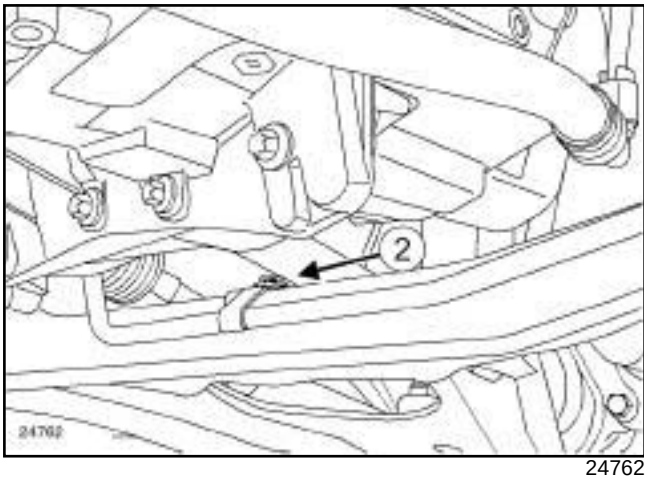

24762

❑ Remove the power-assisted steering low pressure pipe bolt (**2**) on the front axle subframe.

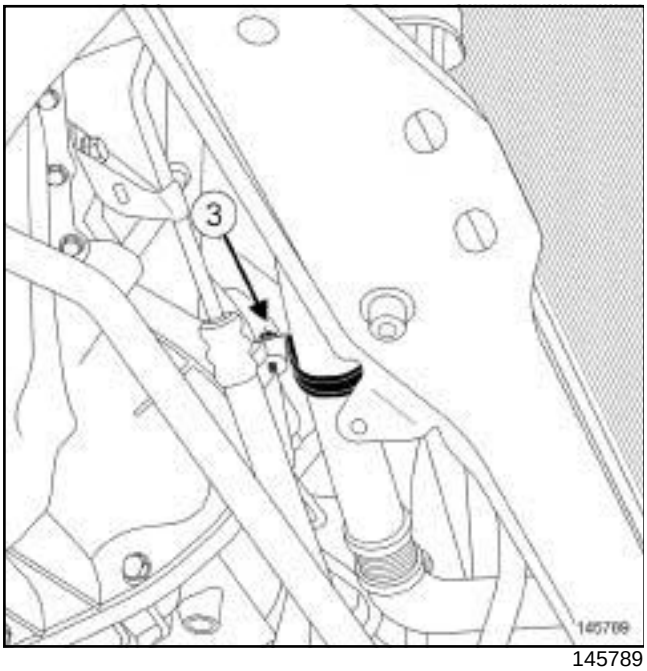

145789

❑ Remove the cooling pipe support bolt (**3**) on the sump.

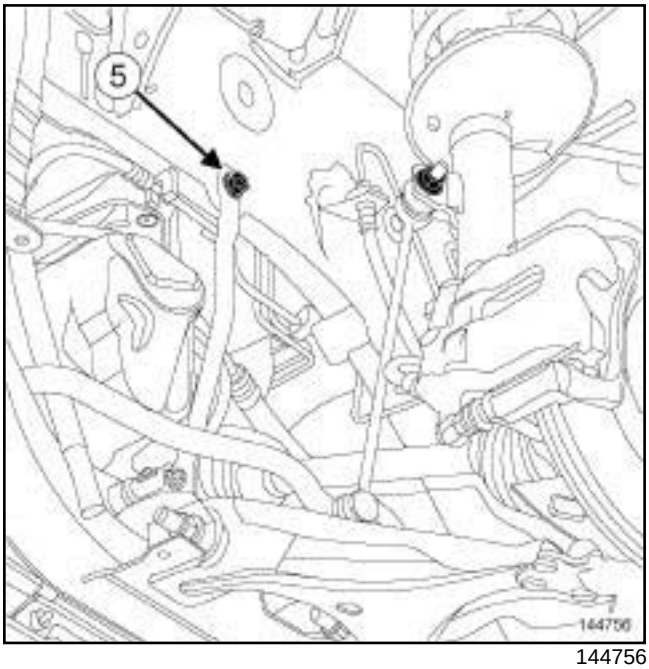

144756

❑ Remove the front axle subframe tie-rod upper bolts (**5**) .

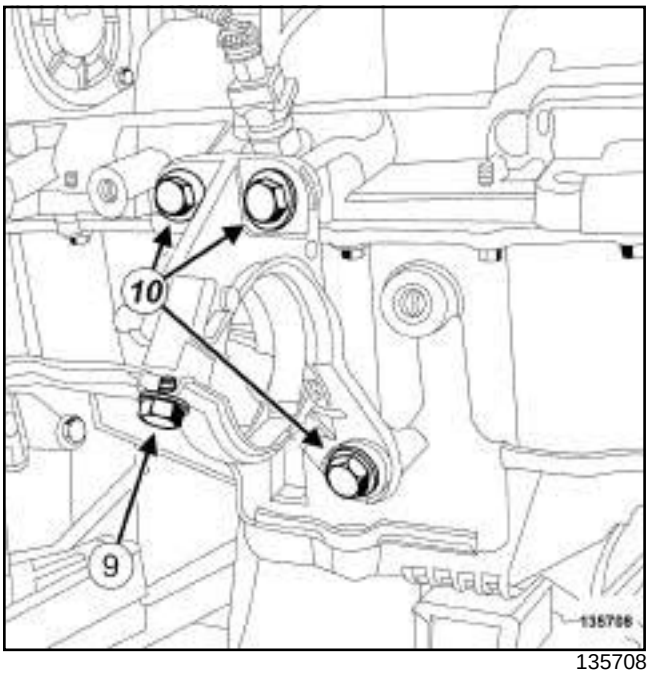

135708

❑ Remove:

- the right-hand driveshaft flange bolt (**9**) on the relay bearing,
- the bolts (**10**) from the relay bearing,
- the relay bearing.

K9K

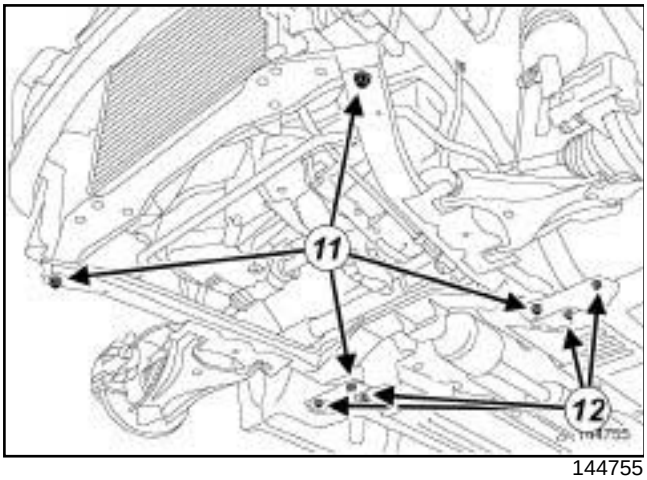

144755

❑ Remove:

- the bracket bolts (**12**) ,
- one by one, the front axle subframe bolts (**11**) and replace them in turn with the threaded rods of the **(Tav. 1747)**.

> Note:
>
> Make sure the threaded rod of the **(Tav. 1747)** is sufficiently screwed into the threaded hole and that the nut of the tool is correctly resting on the front axle subframe.

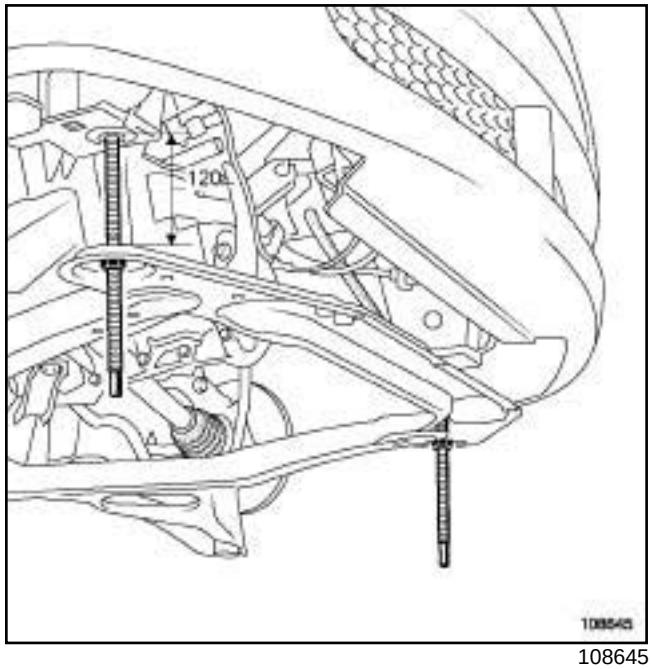

108645

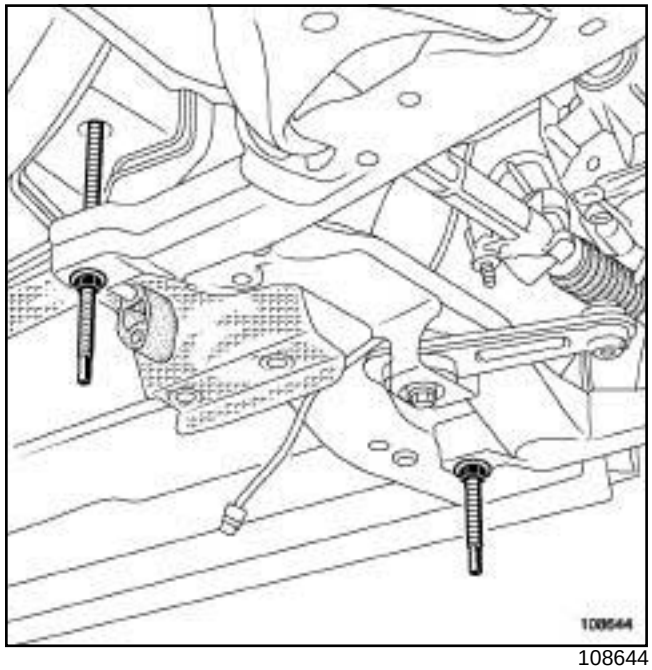
108644

❑ Lower the front axle subframe **120 mm**, gradually loosening the nuts of the **(Tav. 1747)**.

K9K

II - REMOVAL OPERATION

STANDARD HEATING RECIRCULATION

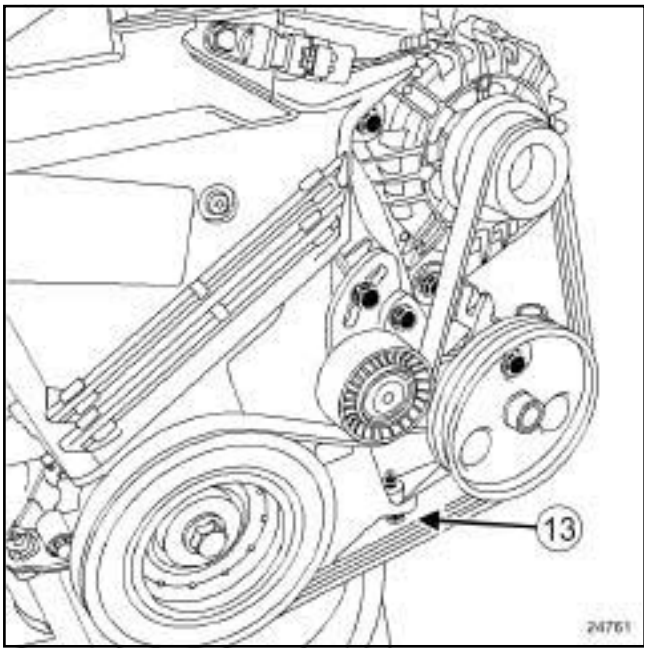

24761

❑ Remove the power-assisted steering pump support bolt (**13**) on the sump.

AIR CONDITIONING

❑ Remove the bolt from the sump on the multifunction support.

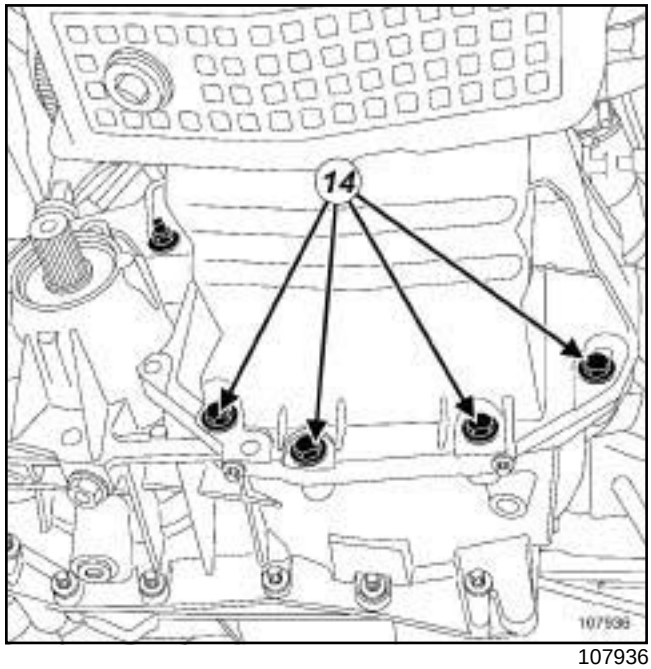

107936

❑ Remove:

- the engine-gearbox coupling bolts (**14**) ,
- the sump bolts,
- the sump.

Note:

If the sump cannot be extracted because it is in contact with the oil pump strainer, do not force the removal of the sump as this may damage the oil splash plate.

Loosen the oil pump bolts by a few turns (the tip of your finger should pass between the bolt head and the oil pump casing) using 10 mm and 13 mm open-jawed spanners and while tilting the sump towards the front of the vehicle.

REFITTING

I - REFITTING PREPARATION OPERATION

❑ **parts always to be replaced: engine oil sump seal**.

❑ **parts always to be replaced: Front sub-frame bolt**.

WARNING
Do not scrape the joint faces of the aluminium, any damage caused to the joint face will result in a risk of leaks.

K9K

❑ Clean the cylinder block joint face using **SUPER CLEANING AGENT FOR JOINT FACES** (see **Vehicle: Parts and consumables for the repair**) (04B, Consumables - Products).

> **WARNING**
> To ensure proper sealing, the gasket surfaces must be clean, dry and not greasy (avoid any finger marks).

❑ Use **SURFACE CLEANER** (see **Vehicle: Parts and consumables for the repair**) (04B, Consumables - Products) to degrease:

- the sump joint face if it is to be reused,
- the cylinder block gasket face.

> **WARNING**
> Applying excess sealant could cause it to be squeezed out when parts are tightened. A mixture of sealant and fluid could damage certain components (engine, radiator, etc.).

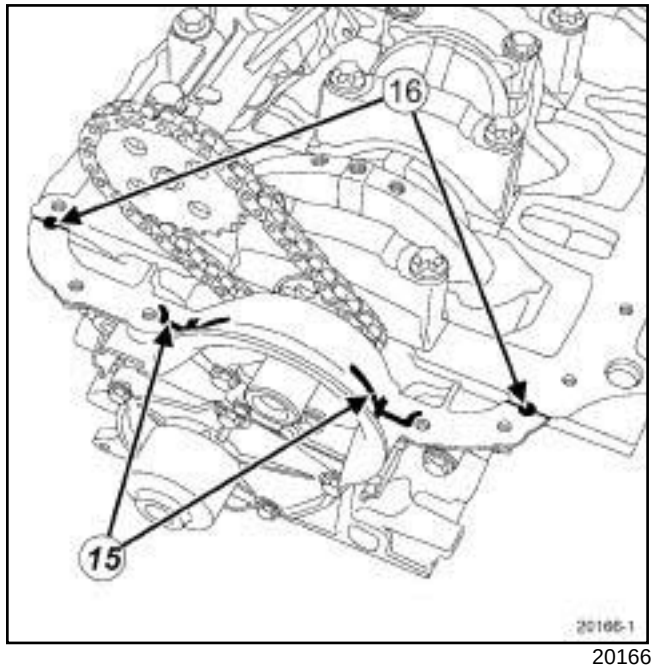

20166

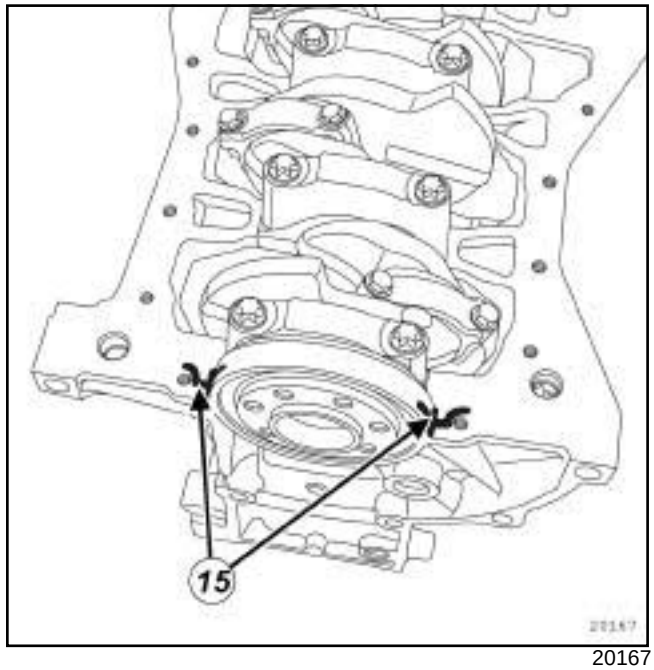

20167

❑ Apply:

- four beads (**15**) of **SILICONE ADHESIVE SEALANT** (see **Vehicle: Parts and consumables for the repair**) (04B, Consumables - Products) with a diameter of **5 mm**,
- two drops (**16**) of **SILICONE ADHESIVE SEALANT** (see **Vehicle: Parts and consumables for the repair**) (04B, Consumables - Products) with a diameter of **5 mm** at the intersection between the cylinder block and the crankshaft closure panel.

K9K

II - REFITTING OPERATION

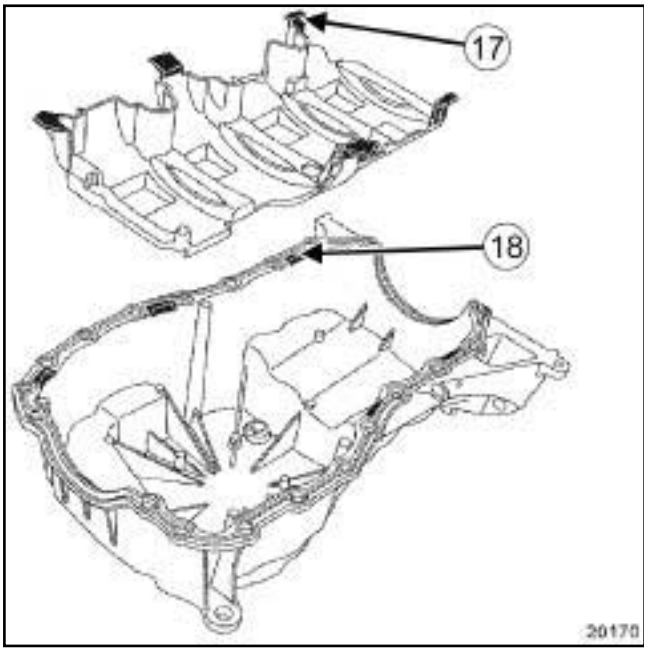

20170

❑

Note:

When refitting the sump, ensure that:

- the oil splash plate tabs (**17**) are positioned correctly in the slots (**18**) ,
- the coupling faces of the sump and cylinder block are correctly aligned, to prevent the clutch housing being deformed when fitting the gearbox.

Refit the oil splash plate.

K9K

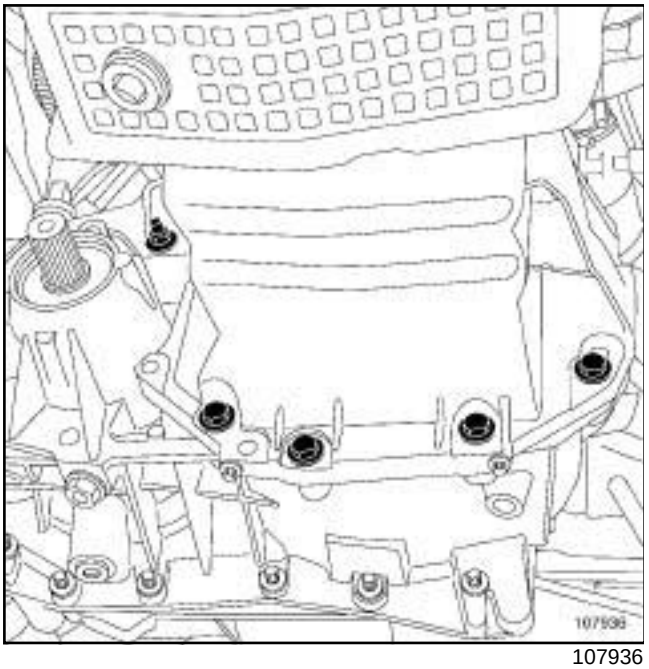

107936

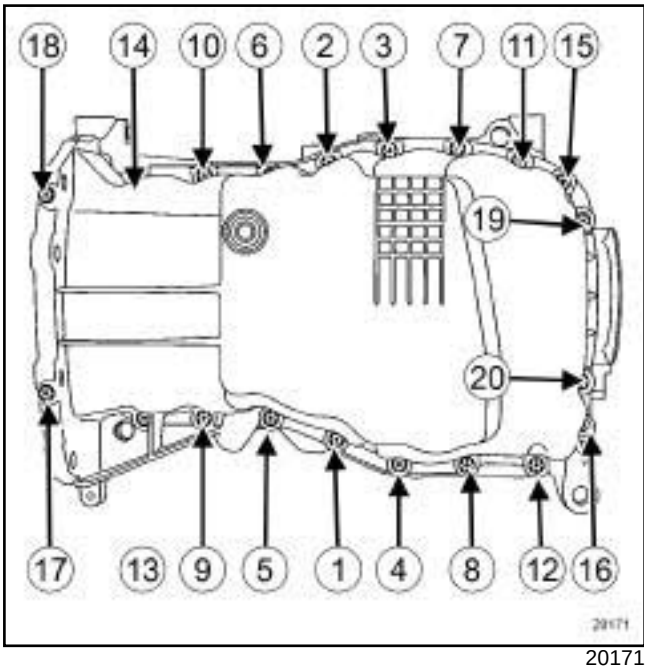

20171

❑ Refit the oil sump fitted with a new seal.

Note:

If the oil pump was loosened beforehand in order to extract the sump, position the sump in order to slide the oil pump strainer into the oil splash plate of the sump.

Position a component jack to support the sump.

Lean the sump towards the front of the vehicle in order to access the oil pump bolts.

Torque tighten the **oil pump bolts (25 N.m)** using the small torque wrench **77 11 226 888**.

Note:

Before pressing the sump on the cylinder block, check that the sump seal is still in place and that it has not come out of the grooves on the sides.

❑ Tighten until contact:

- the sump bolts on the cylinder block,
- the sump bolts on the gearbox.

❑ Torque tighten:

- in order the **sump bolts on the cylinder block (14 N.m)**,
- the **sump bolts on the gearbox (44 N.m)**.

AIR CONDITIONING

❑ Refit the sump bolt on the multifunction support.

❑ Torque tighten the **sump bolts on the multifunction support (25 N.m)**.

STANDARD HEATING RECIRCULATION

❑ Refit the power-assisted steering pump support on the sump.

❑ Torque tighten the **power assisted steering pump support bolt on the sump (25 N.m)**.

III - FINAL OPERATION

❑ Fit the front axle subframe.

❑ Refit the brackets.

❑ Torque tighten the **bracket bolts (62 N.m)**.

K9K

- ❑ One by one, remove the threaded rods of the **(Tav. 1747)** and replace them in turn with new front axle subframe bolts.
- ❑ Refit:
  - the relay bearing bolts,
  - the right-hand driveshaft flange bolt(s) on the relay bearing.
- ❑ Tighten to torque and in order:
  - the **relay bearing bolts (44 N.m)**,
  - the **right-hand driveshaft flange bolt(s) on the relay bearing (21 N.m)**.
- ❑ Refit the front axle subframe tie-rod upper bolts.
- ❑ Torque tighten the **front axle subframe tie-rod upper bolts (21 N.m)**.
- ❑ Refit the cooling pipe support bolt on the sump.
- ❑ Refit the power-assisted steering low pressure pipe bolt on the front axle subframe.
- ❑ Torque tighten the **power-assisted steering low pressure pipe bolt on the front axle subframe (25 N.m)**.
- ❑ Refit the catalytic converter upstream stay (see **19B**, **Exhaust**, **Catalytic converter: Removal - Refitting**, page **19B-10**) .
- ❑ Refit the steering box bolts on the front axle subframe (see **Steering box: Removal - Refitting**) (36A, Steering assembly).
- ❑ Refit:
  - the steering box heat shield,
  - the lower arm ball joints (see **Front driveshaft lower arm: Removal - Refitting**) (31A, Front axle components),
  - the lower engine tie-bar (see **19D**, **Engine mounting**, **Lower engine tie-bar: Removal - Refitting**, page **19D-8**) .
- ❑ Refit the front bumper (see **Front bumper assembly: Exploded view**) and (see **Exterior body front trim assembly: Exploded view**) (55, Exterior protection).
- ❑ Refit:
  - the engine undertray,
  - the front wheel arch side liners,
  - the front wheels (see **Wheel: Removal - Refitting**) (35A, Wheels and tyres).
- ❑ Top up the engine oil (see **10A**, **Engine and cylinder block assembly**, **Engine oil: Draining - Refilling**, page **10A-32**) .

K4M

Special tooling required	
Tav. 1747	Threaded rods for carrying out subframe operations.

Tightening torques ▽	
sump bolts on the cylinder block	**14 N.m**
sump bolts on the gearbox	**44 N.m**
sump bolt on the multi-function support	**25 N.m**
bracket bolts	**62 N.m**
front axle subframe bolts	**110 N.m**
relay bearing bolts	**44 N.m**
right-hand driveshaft flange bolt(s) on the relay bearing	**21 N.m**
front axle subframe tie-rod upper bolts	**21 N.m**
power-assisted steering low pressure pipe bolt on the front axle subframe	**21 N.m**
steering box bolts on the front axle subframe	**105 N.m**

REMOVAL

I - REMOVAL PREPARATION OPERATION

❏ Position the vehicle on a two-post lift (see **Vehicle: Towing and lifting**) (02A, Lifting equipment).

❏ Remove the front bumper (see **Front bumper assembly: Exploded view**) and (see **Exterior body front trim assembly: Exploded view**) (55A, Exterior protection).

❏ Remove:

- the engine undertray bolts,
- the engine undertray.

❏ Drain the engine oil (see **10A**, **Engine and cylinder block assembly**, **Engine oil: Draining - Refilling**, page **10A-32**) .

❏ Remove:

- the front wheels (see **Wheel: Removal - Refitting**) (35A, Wheels and tyres),
- the front wheel arch side liners,
- the lower engine tie-bar (see **19D**, **Engine mounting**, **Lower engine tie-bar: Removal - Refitting**, page **19D-8**) .

❏ Extract the lower arm ball joints from the stub axle carrier (see **Front driveshaft lower arm: Removal - Refitting**) (31A, Front axle components).

❏ Unclip the downstream oxygen sensor wiring on the heat shield on the steering box.

❏ Remove (see **Steering box: Removal - Refitting**) (36A, Steering assembly):

- the heat shield bolts on the steering box,
- the steering box heat shield,
- the steering box bolts on the front axle subframe.

❏ Attach the steering rack to the body.

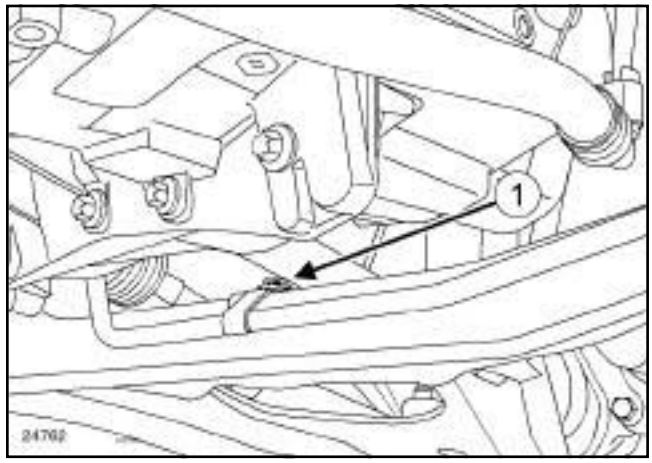

24762

❏ Remove the power-assisted steering low pressure pipe bolt (**1**) on the front axle subframe.

K4M

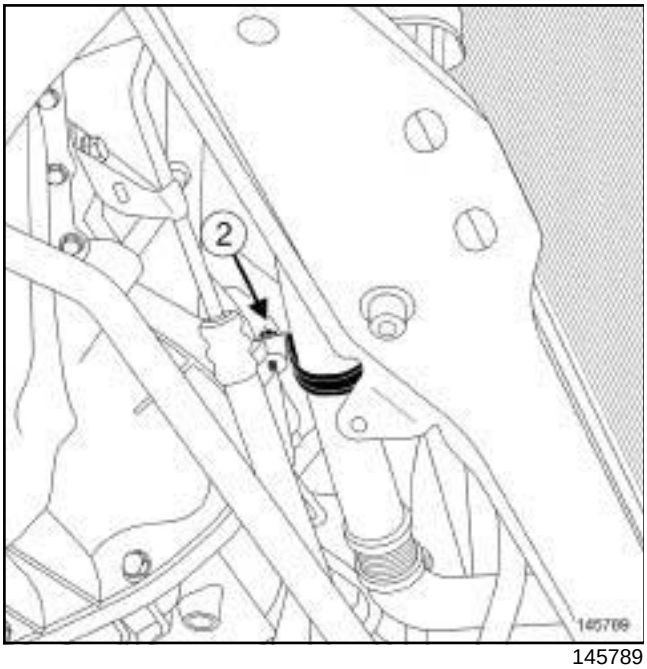

145789

❑ Remove the cooling pipe support bolt (**2**) on the sump.

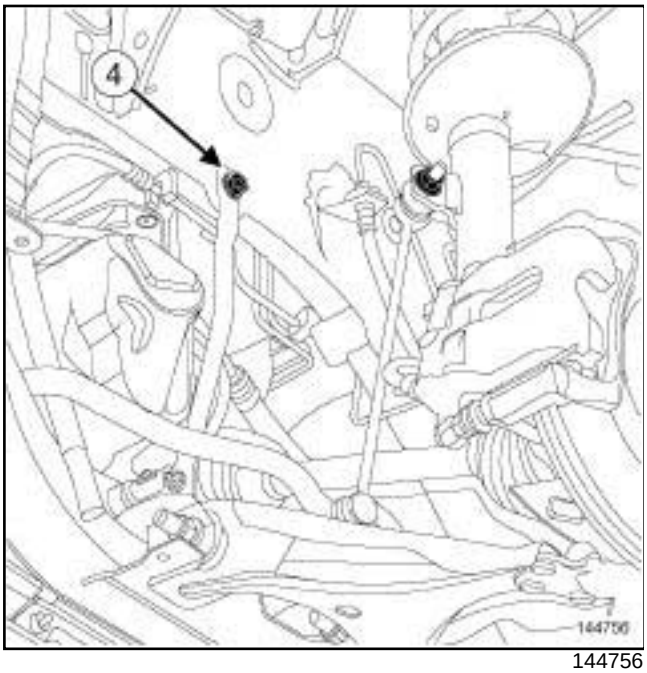

144756

❑ Remove the front axle subframe tie-rod upper bolts (**4**) .

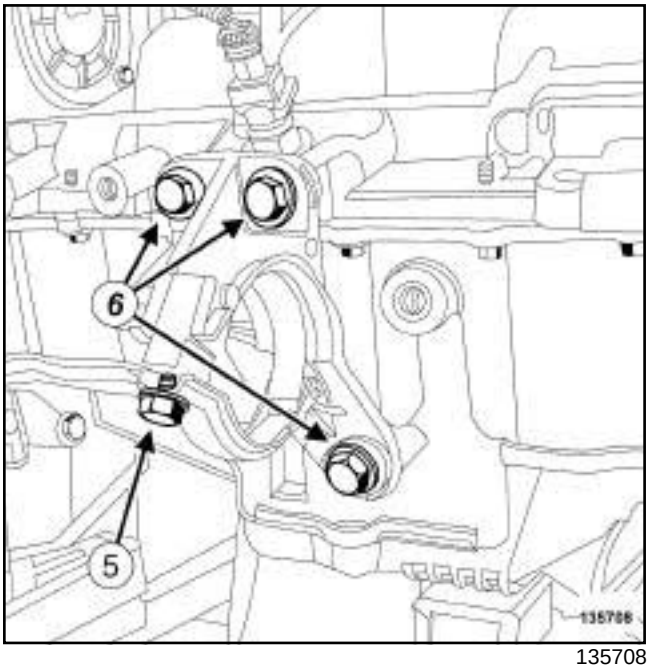

135708

❑ Remove:

- the right-hand driveshaft flange bolt (**5**) on the relay bearing,
- the bolts (**6**) from the relay bearing,
- the relay bearing.

K4M

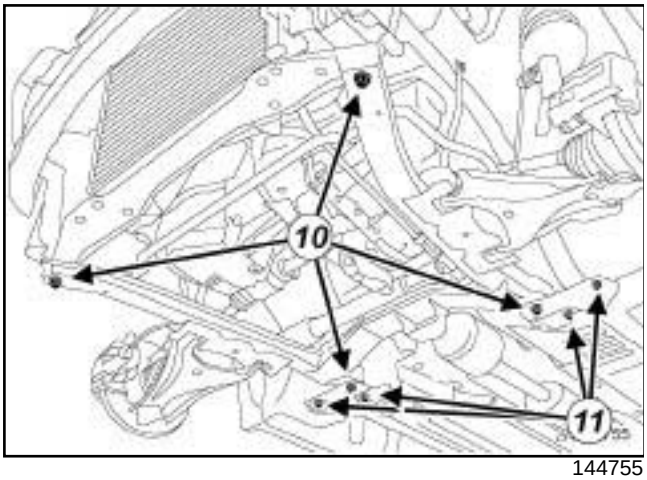

144755

❑ Remove:

- the bracket bolts (**11**) ,
- one by one, the front axle subframe bolts (**10**) and replace them in turn with the threaded rods of the **(Tav. 1747)**.

> Note:
>
> Make sure the threaded rod of the **(Tav. 1747)** is sufficiently screwed into the threaded hole and that the nut of the tool is correctly resting on the front axle subframe.

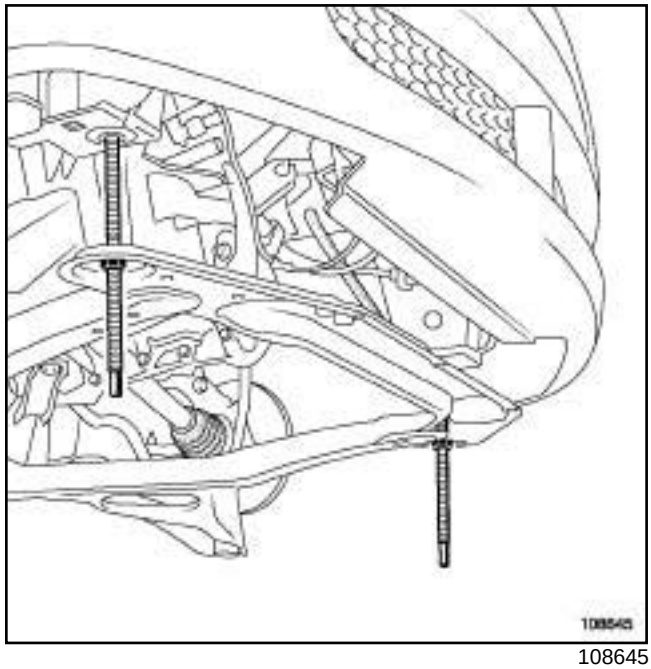
108645

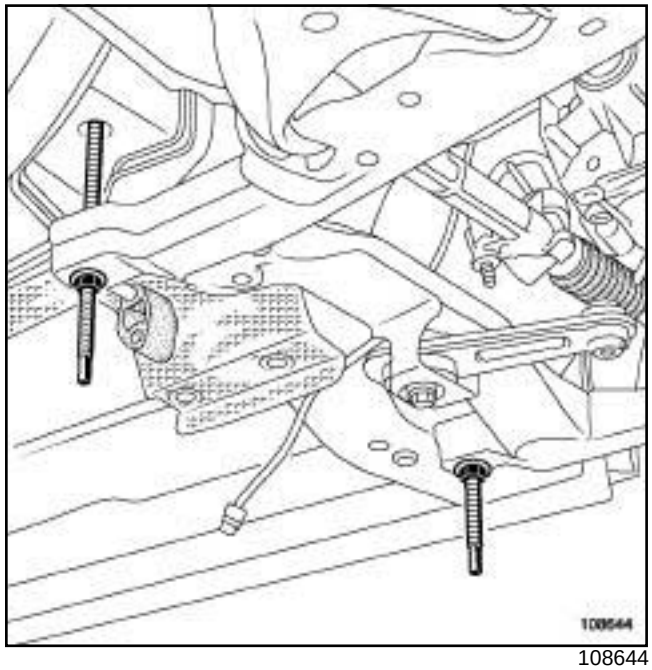
108644

❑ Lower the front axle subframe by at least **120 mm**, gradually loosening the nuts of the **(Tav. 1747)**.

K4M

II - REMOVAL OPERATION

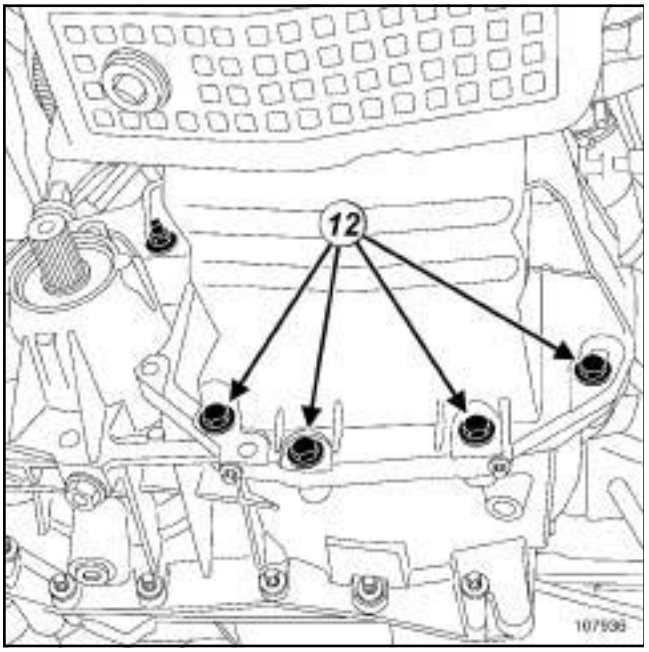

107936

❑ Remove:

- the sump bolt from the multifunction support,
- the engine-gearbox coupling bolts (**12**) ,
- the sump bolts on the cylinder block,
- the sump,
- the oil splash plate.

REFITTING

I - REFITTING PREPARATION OPERATION

❑ **parts always to be replaced: engine oil sump seal**.

❑ **parts always to be replaced: Front sub-frame bolt**.

> **WARNING**
> Do not scrape the joint faces of the aluminium, any damage caused to the joint face will result in a risk of leaks.

❑ Clean the cylinder block joint face using **SUPER CLEANING AGENT FOR JOINT FACES** (see **Vehicle: Parts and consumables for the repair**) (04B, Consumables - Products).

> **WARNING**
> To ensure proper sealing, the gasket surfaces must be clean, dry and not greasy (avoid any finger marks).

❑ Use **SURFACE CLEANER** (see **Vehicle: Parts and consumables for the repair**) (04B, Consumables - Products) to degrease:

- the sump joint face if it is to be reused,
- the cylinder block gasket face.

> **WARNING**
> Applying excess sealant could cause it to be squeezed out when parts are tightened. A mixture of sealant and fluid could damage certain components (engine, radiator, etc.).

K4M

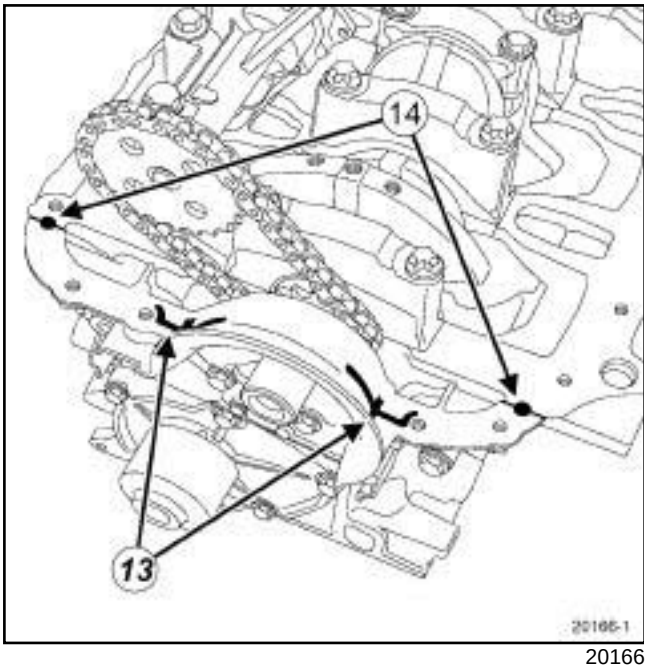

20166

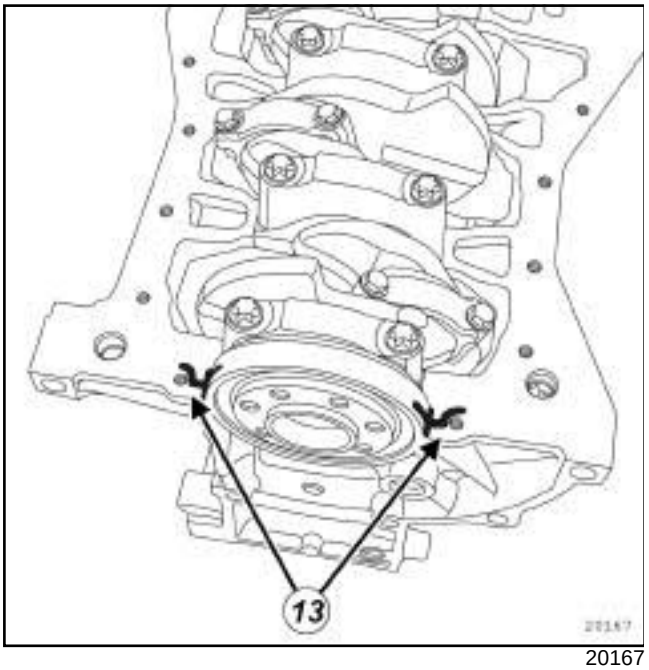

20167

❑ Apply:

- four beads (**13**) of **SILICONE ADHESIVE SEALANT** (see **Vehicle: Parts and consumables for the repair**) (04B, Consumables - Products) with a diameter of **5 mm**,
- two drops (**14**) of **SILICONE ADHESIVE SEALANT** (see **Vehicle: Parts and consumables for the repair**) (04B, Consumables - Products) with a diameter of **5 mm** at the intersection between the cylinder block and the crankshaft closure panel.

II - REFITTING OPERATION

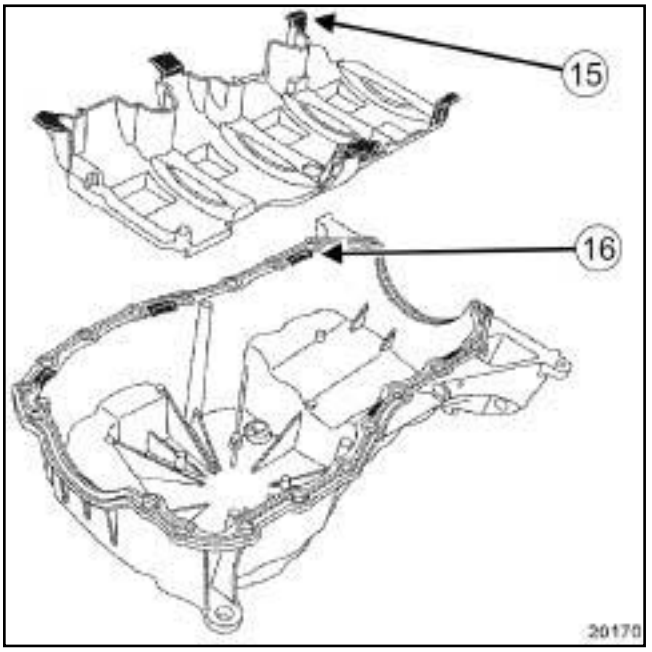

20170

❑

Note:

When removing the sump, ensure that:

- the oil splash plate tabs (**15**) are positioned correctly in the slots (**16**) ,
- the coupling faces of the sump and cylinder block are correctly aligned, to prevent the clutch housing being deformed when fitting the gearbox.

Refit the oil splash plate.

K4M

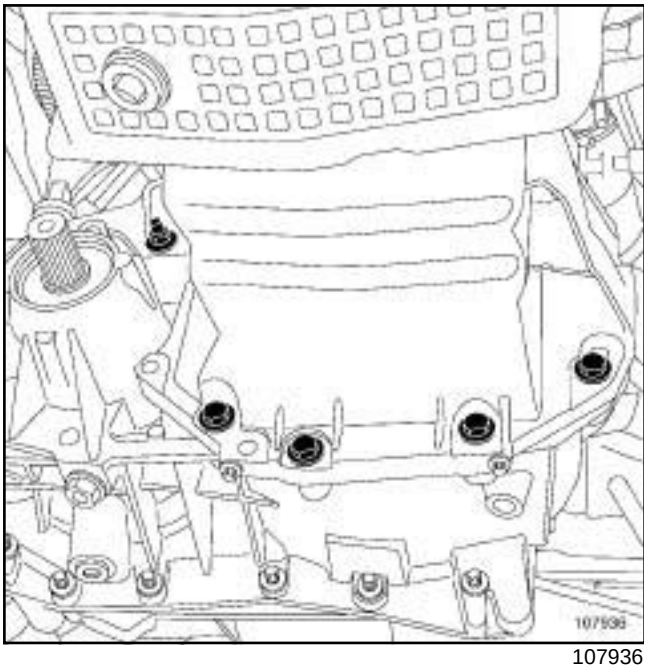

107936

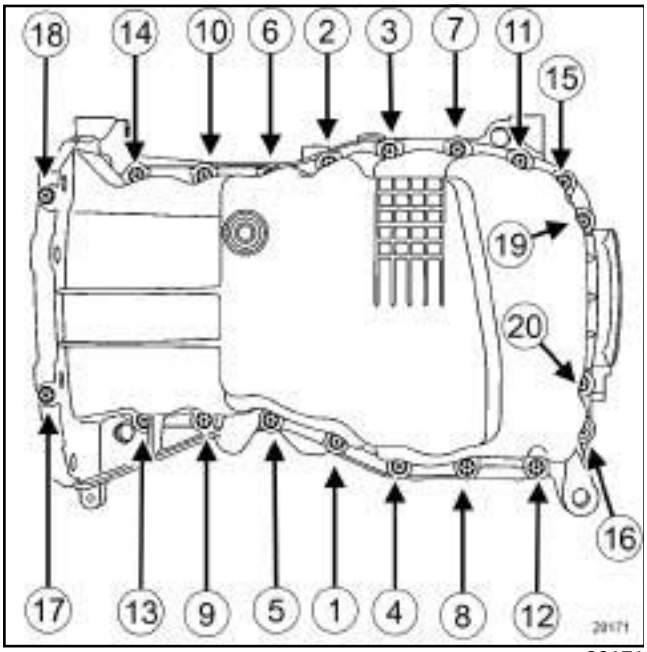

20171

❑ Refit the oil sump fitted with a new seal.

❑ Tighten until contact:

- the sump bolts on the cylinder block,
- the bolts from the sump on the gearbox,
- the sump bolts from the multifunction support.

❑ Torque tighten:

- in order the **sump bolts on the cylinder block (14 N.m)**,
- the **sump bolts on the gearbox (44 N.m)**,
- the **sump bolt on the multifunction support (25 N.m)**.

III - FINAL OPERATION

❑ Fit the front axle subframe.

❑ Refit the brackets.

❑ Torque tighten the **bracket bolts (62 N.m)**.

❑ One by one, remove the threaded rods of the **(Tav. 1747)** and replace them in turn with new front axle subframe bolts.

K4M

❑ Torque tighten the **front axle subframe bolts (110 N.m)**.

❑ Refit:

- the relay bearing bolts,
- the right-hand driveshaft flange bolt(s) on the relay bearing.

❑ Tighten to torque and in order:

- the **relay bearing bolts (44 N.m)**,
- the **right-hand driveshaft flange bolt(s) on the relay bearing (21 N.m)**.

❑ Refit the front axle subframe tie-rod upper bolts.

❑ Torque tighten the **front axle subframe tie-rod upper bolts (21 N.m)**.

❑ Refit the cooling pipe support bolt on the sump.

❑ Refit the power-assisted steering low pressure pipe bolt on the front axle subframe.

❑ Torque tighten the **power-assisted steering low pressure pipe bolt on the front axle subframe (21 N.m)**.

❑ Refit the steering box bolts on the front axle subframe.

❑ Tighten to torque the **steering box bolts on the front axle subframe (105 N.m)**.

❑ Refit:

- the steering box heat shield,
- the lower arm ball joints (see **Front driveshaft lower arm: Removal - Refitting**) (31A, Front axle components),
- the lower engine tie-bar (see **19D**, **Engine mounting**, **Lower engine tie-bar: Removal - Refitting**, page **19D-8**) .

K4M

- Refit the front bumper (see **Front bumper assembly: Exploded view**) and (see **Exterior body front trim assembly: Exploded view**) (55A, Exterior protection).
- Refit:
  - the engine undertray,
  - the front wheel arch side liners,
  - the front wheels (see **Wheel: Removal - Refitting**) (35A, Wheels and tyres).
- Top up the engine oil (see **10A**, **Engine and cylinder block assembly**, **Engine oil: Draining - Refilling**, page **10A-32**) .

K9K

Equipment required
safety strap(s)
component jack
indelible pencil
torque wrench
Diagnostic tool

Tightening torques ▽	
con rod cap bolts	**20 N.m + 45° ± 6°**
oil pump bolts	**25 N.m**

IMPORTANT
To avoid all risk of damage to the systems, apply the safety and cleanliness instructions and operation recommendations before carrying out any repair (see **Vehicle: Precautions for the repair**) .

IMPORTANT
Wear leaktight gloves (Nitrile type) for this operation.

REMOVAL

I - REMOVAL PREPARATION OPERATION

❑ Position the vehicle on a two-post lift (see **Vehicle: Towing and lifting**) (02A, Lifting equipment).

❑ Remove the engine undertray.

❑ Drain the oil from the engine (see **10A**, **Engine and cylinder block assembly**, **Engine oil: Draining - Refilling**, page **10A-32**) .

❑ Remove the oil filter (see **10A**, **Engine and cylinder block assembly**, **Oil filter: Removal - Refitting**, page **10A-34**) .

❑ Remove the lower engine tie-bar (see **19D**, **Engine mounting**, **Lower engine tie-bar: Removal - Refitting**, page **19D-8**) .

❑ Strap the radiator to the vehicle using **safety strap(s)**.

❑ Remove the front axle subframe (see **Front axle subframe: Removal - Refitting**) (31A, Front axle components).

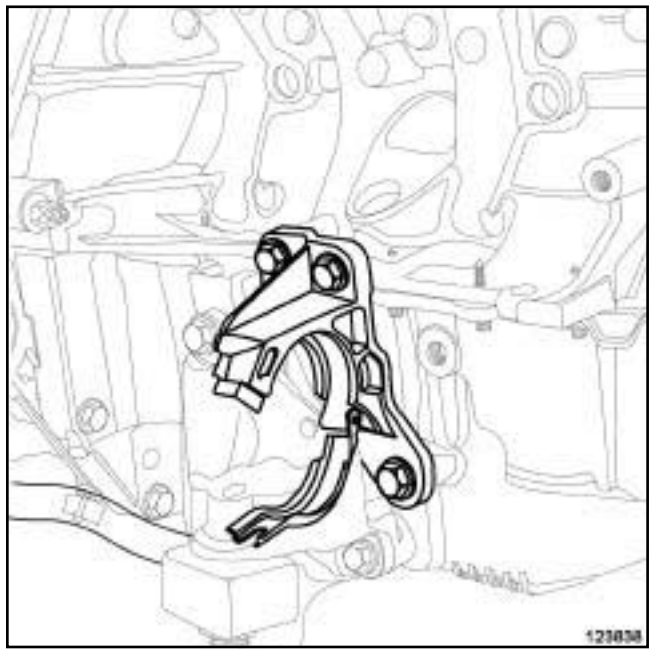

123838

❑ Remove the relay bearing of the front right-hand wheel driveshaft.

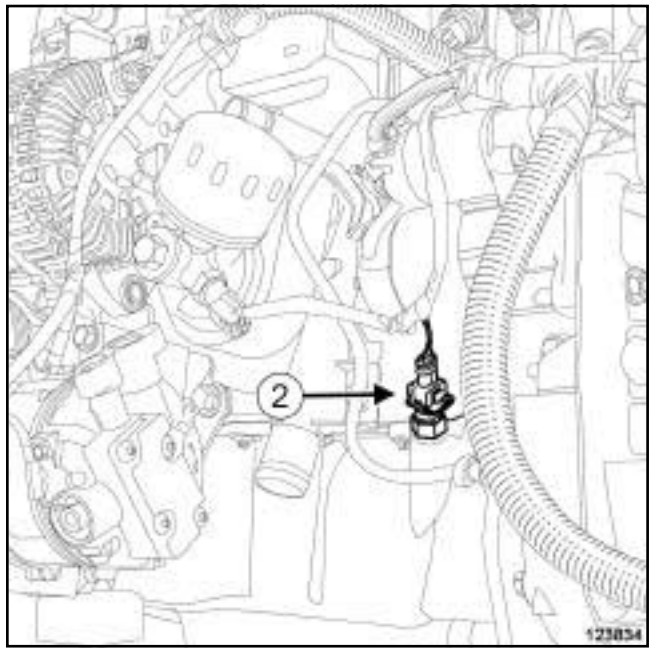

123834

❑ Disconnect the oil level sensor connector (if equipped) (**2**) .

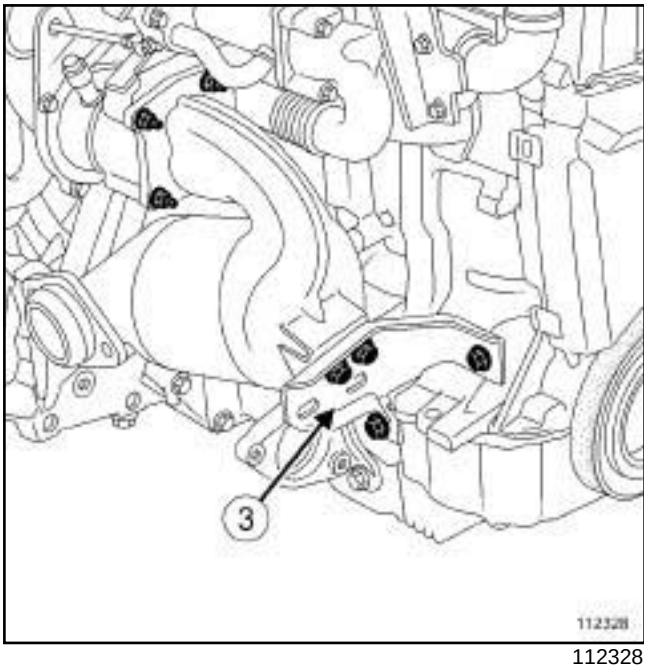

112328

❑ Remove the catalytic converter upstream stay (**3**) .

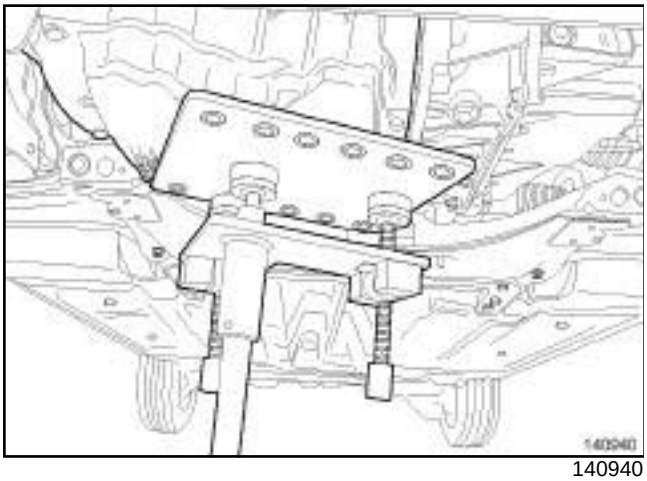

140940

❑

WARNING
Failure to observe the following procedure may damage the oil pump strainer.

Undo the bolts of the engine oil sump.

❑ Fit a **component jack** to support the engine oil sump.

❑ Remove the bolts from the engine oil sump.

❑ Detach the engine oil sump, while supporting it with the **component jack**.

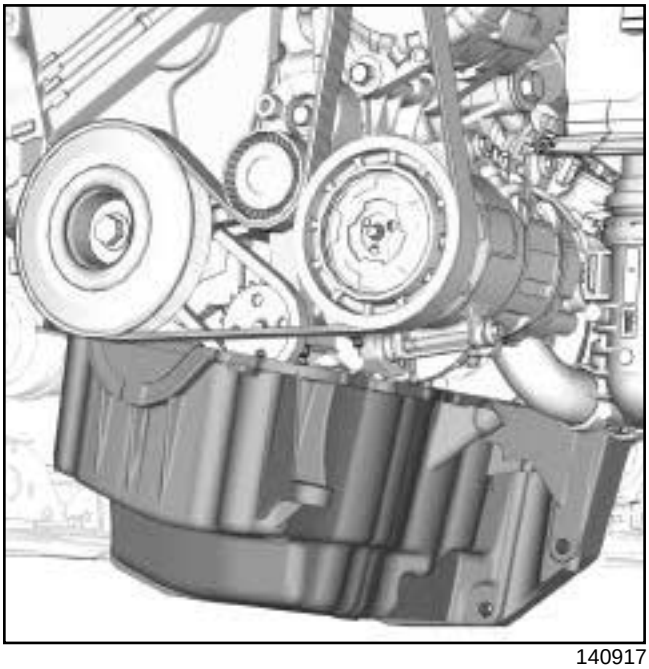
140917

❑ Tilt the engine oil sump forwards in order to access the oil pump bolts.

❑ Partially loosen the oil pump bolts **3 mm** to **5 mm**.

❑ Detach the oil pump from its position in order to remove the engine oil sump.

❑ Remove:

- the engine oil sump,
- the engine oil sump seal,
- the oil pump.

K9K

II - REMOVAL OPERATION FOR THE CON ROD BEARING SHELLS NO.2

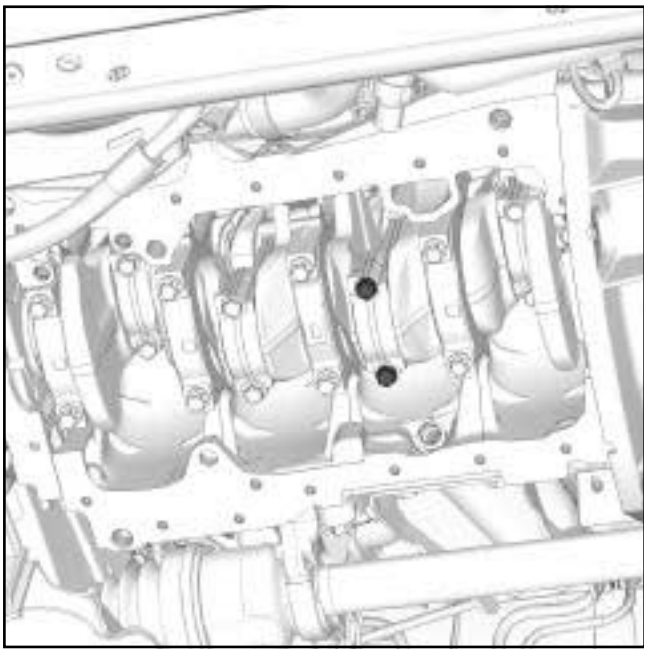

139306

- Use **SURFACE CLEANER** (see **Vehicle: Parts and consumables for the repair**) (04B, Consumables - Products) to clean the big ends.
- Mark the position of the con rod cap in relation to the con rod body using a **indelible pencil**.
- Position the crankshaft at Top Dead Centre.

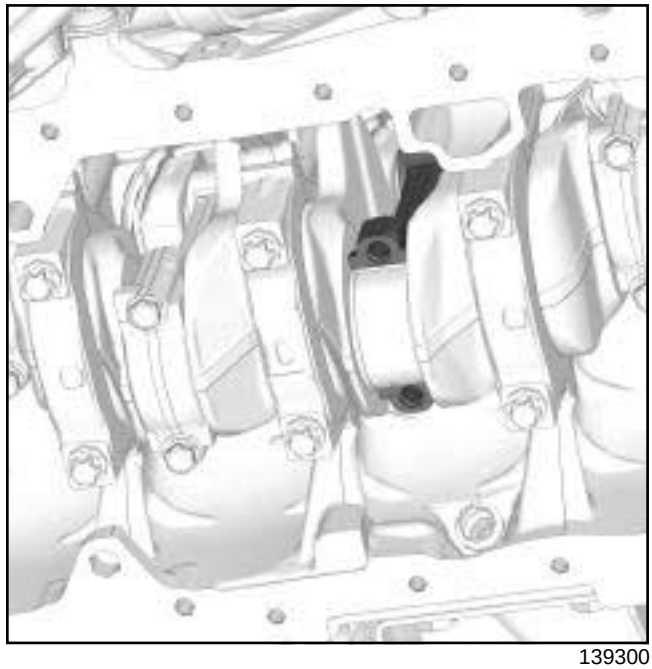

139300

- Remove:
  - the con rod bolts,
  - the con rod cap,
  - the lower con rod bearing shell.

> Note:
>
> If reusing the con rod bearing shells, mark the position of the lower con rod bearing shell in relation to the con rod cap.

- Use **SURFACE CLEANER** (see **Vehicle: Parts and consumables for the repair**) (04B, Consumables - products) to clean the bearing mating face on the con rod cap.

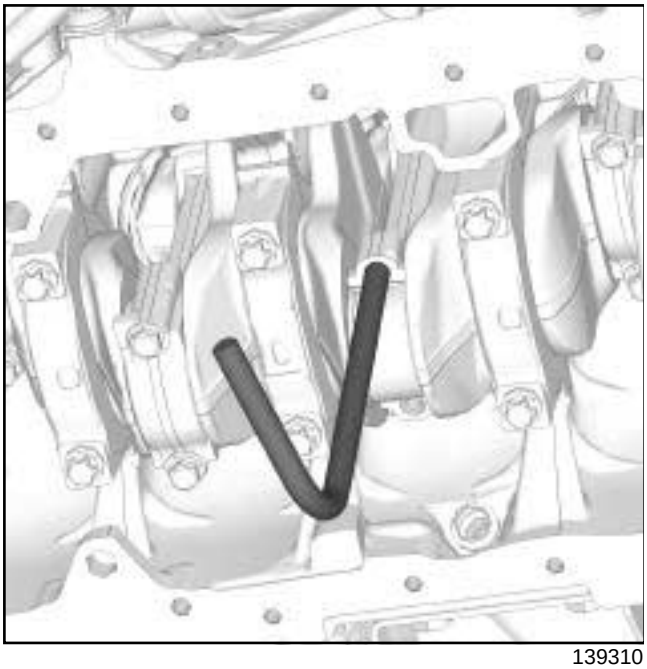

139310

- ❑ Fit the tie rod of the toolon the con rod body.
- ❑ Push the con rod upwards to release the con rod from the crankpin.
- ❑ Turn the crankshaft **90°** clockwise (timing end).

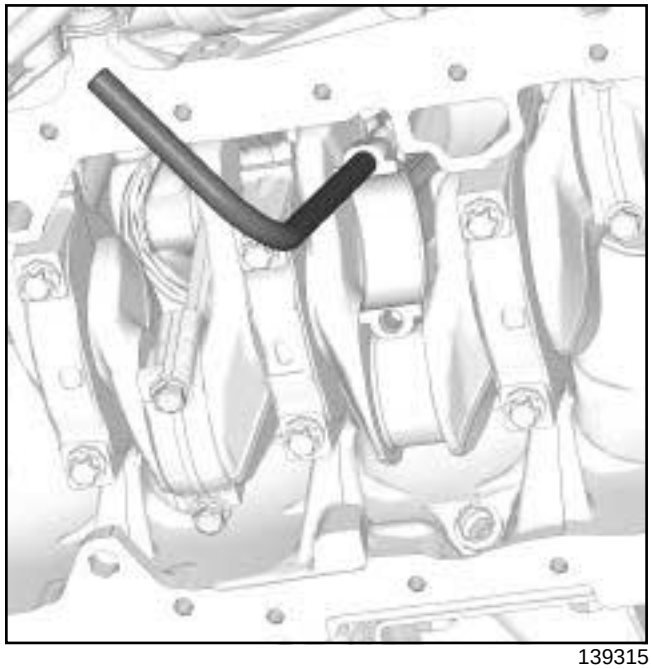

139315

❑

> **WARNING**
> Failure to observe the following procedure may damage the piston base cooling jets.

Pull the con rod - piston assembly using the tie rod of the tool, taking care not to allow the piston to touch the piston base cooling jets.

- ❑ Remove the upper con rod bearing shell.

> Note:
> If reusing the con rod bearing shells, mark the position of the upper con rod bearing shell in relation to the con rod body.

- ❑ Use **SURFACE CLEANER** (see **Vehicle: Parts and consumables for the repair**) (04B, Consumables - products) to clean the bearing mating face on the con rod body.

REFITTING

I - REFITTING OPERATION FOR THE CON ROD BEARING SHELLS ON CYLINDER NO.2

- ❑ **parts always to be replaced: con rod cap bolts**

K9K

❏

Note:

Always replace con rod bearing shells with a width of **20 mm** by con rod bearing shells with a width of **18 mm**.

If the set of con rod bearing shells only includes con rod bearing shells which are **18mm** wide, only use the head of the toolwith the marking " **K9K SUP** ".

Fit the head of the toolwith the marking " **K9K INF** " on the threaded sleeve of the tool.

❏ Position the lower con rod bearing shell on the tool.

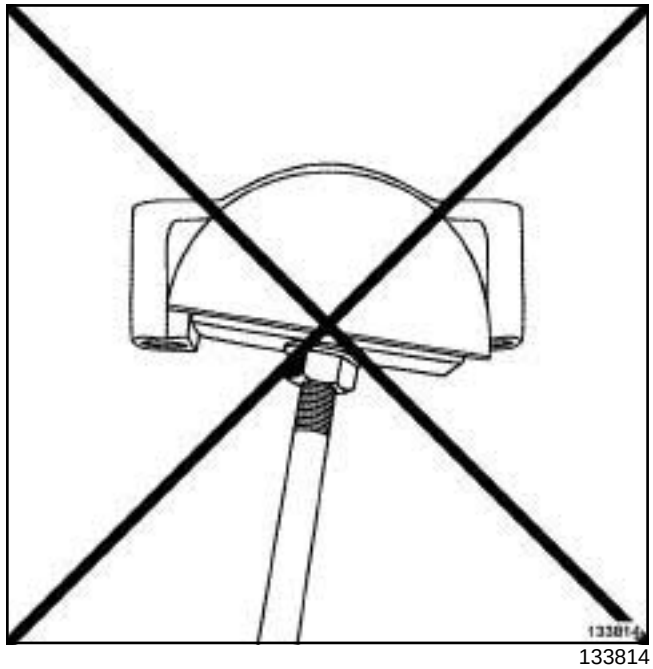

133814

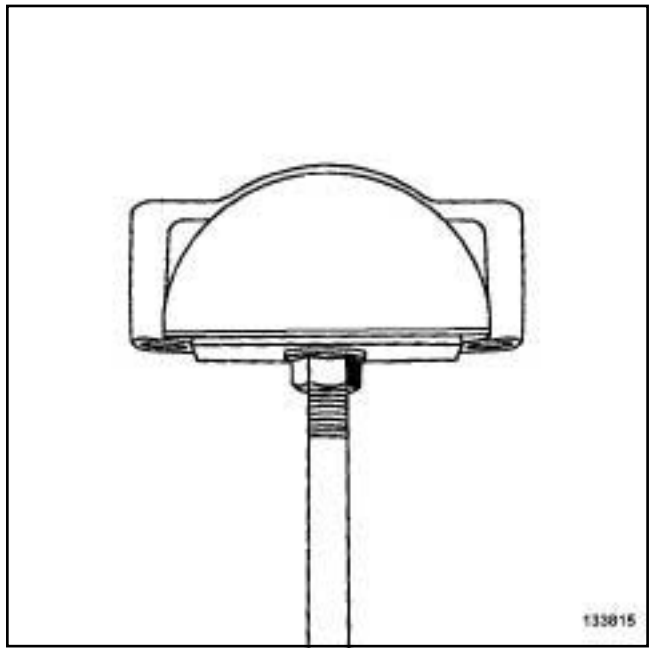

133815

❏

Note:

The contact surface between the bearing shell and the con rod must be dry and free of grease.

Fit the lower con rod bearing shell on the con rod cap using the tool.

❏ Position the lower con rod bearing shell so that the ends do not protrude beyond the con rod cap.

❏ Lubricate the surface of the con rod bearing shell (crankshaft end) using new engine oil.

K9K

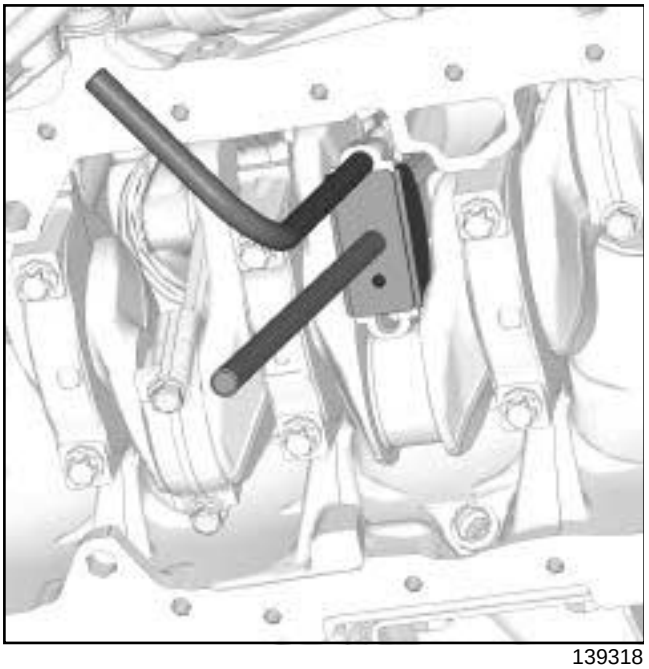

139318

- Remove the tool head with the marking " **K9K INF** " and fit the head with the marking " **K9K SUP** ".
- Position the upper con rod bearing shell on the tool.
- Fit the upper con rod bearing shell on the con rod body using the tool.
- Position the upper con rod bearing shell so that the ends do not protrude beyond the con rod body.
- Lubricate the surface of the con rod bearing shell (crankshaft end) using new engine oil.
- Push the con rod - piston assembly back up into place.
- Turn the crankshaft **90°** anticlockwise.
- Lubricate the crankpin with new engine oil.
- Pull the con rod - piston assembly to position the con rod on the crankshaft.
-

> Note:
>
> Before refitting the con rod cap, ensure that there are no impurities (filings, cloth lint, etc.) on the con rod body or cap surfaces.

Refit:

- the con rod cap according to the mark made during removal,
- the new con rod bolts.

- Torque and angle tighten the **con rod cap bolts (20 N.m + 45° ± 6°)**.

II - REMOVAL - REFITTING OPERATIONS FOR THE CON ROD BEARING SHELLS ON CYLINDERS NO.3, 1 AND 4

- Perform the same removal - refitting operations as for the con rod bearing shells on cylinder no. 2.

> Note:
>
> For removing and refitting the con rod bearing shells on cylinders no. 1 and no. 4, position the pistons at Bottom Dead Centre before performing the same removal and refitting operations as for the con rod bearing shells on cylinder no. 2.

III - FINAL OPERATION

- **parts always to be replaced: engine oil sump seal**

  parts always to be replaced: Oil filter

  parts always to be replaced: Drain plug seal on engine oil sump

> **WARNING**
>
> Do not scrape the joint faces of the aluminium, any damage caused to the joint face will result in a risk of leaks.

> **WARNING**
>
> To ensure proper sealing, the gasket surfaces must be clean, dry and not greasy (avoid any finger marks).

- Use a wooden spatula or an **ABRASIVE PAD** to clean the joint face of the cylinder block and engine oil sump.
- Refit the oil pump.
- Fit without tightening the oil pump bolts, while keeping a clearance of **3 mm** to **5 mm**.
- Fit the engine oil sump seal.

> **WARNING**
>
> Applying excess sealant could cause it to be squeezed out when parts are tightened. A mixture of sealant and fluid could damage certain components (engine, radiator, etc.).

K9K

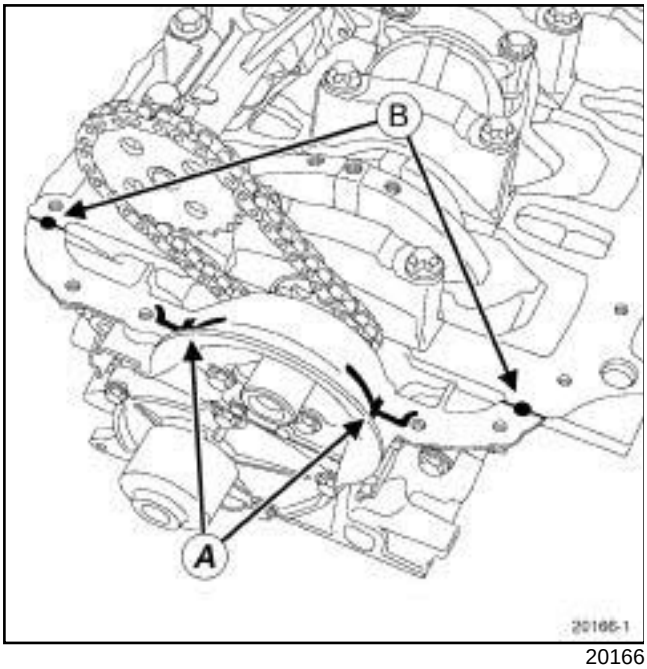

20166

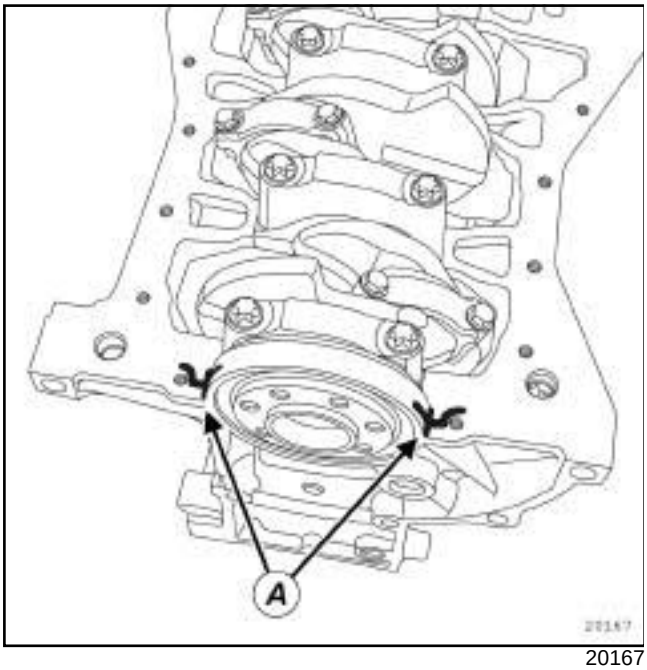

20167

- Apply **SILICONE ADHESIVE SEALANT** (see **Vehicle: Parts and consumables for the repair**) :
  - four beads with a diameter of **5 mm** at (**A**) ,
  - two drops with a diameter of **5 mm** at (**B**) .
- Fit the engine oil sump while supporting it using a **component jack**.

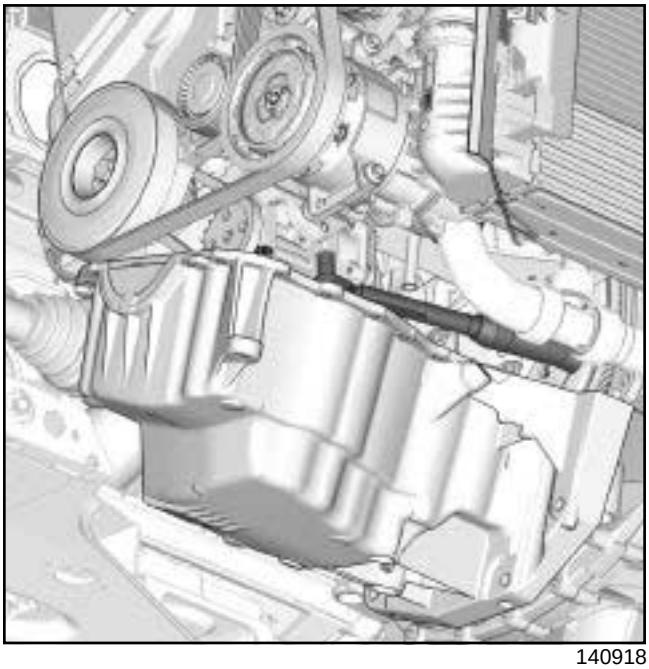

140918

- Tilt the engine oil sump forwards in order to access the oil pump bolts.
- Torque tighten the **oil pump bolts (25 N.m)** using the **torque wrench** PROSTEEL, part number **77 11 226 888** starting with the **13 mm** bolt.
-

> Note:
>
> Check that the engine oil sump seal is definitely in place before tightening the engine oil sump bolts.

- Refit the engine oil sump bolts.
- Torque tighten in order the engine oil sump bolts (see **10A**, **Engine and cylinder block assembly**, **Lower cover: Removal - Refitting**, page **10A-9**) .
- Refit the catalytic converter upstream stay (see **19B**, **Exhaust**, **Catalytic converter: Removal - Refitting**, page **19B-10**) .
- Connect the connector to the oil level sensor.
- Refit the relay bearing of the front right-hand wheel driveshaft (see **Front right-hand driveshaft: Removal - Refitting**) .
- Refit the front axle subframe (see **Front axle subframe: Removal - Refitting**) (31A, Front axle components).
- Remove the **safety strap(s)** from the radiator.
- Refit the lower engine tie-bar (see **19D**, **Engine mounting**, **Lower engine tie-bar: Removal - Refitting**, page **19D-8**) .

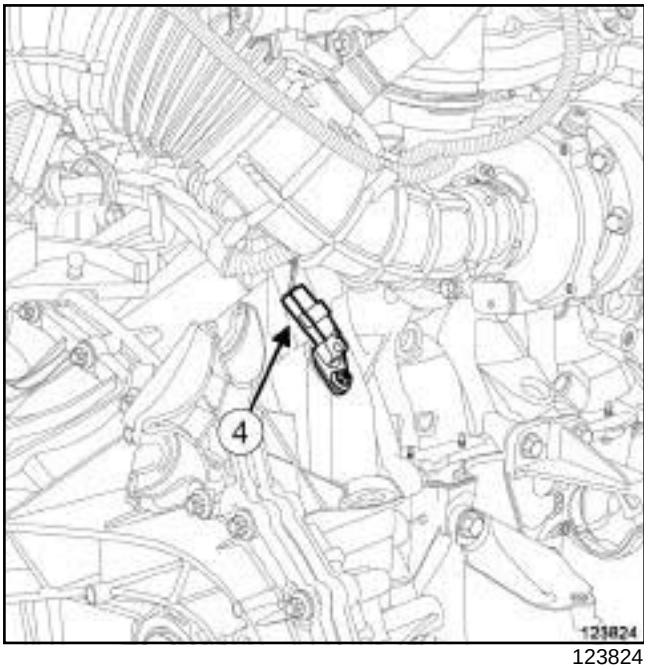

123824

- ❑ Disconnect the crankshaft position sensor (**4**) to prevent the engine from starting.
- ❑ Refit the oil filter (see **10A**, **Engine and cylinder block assembly**, **Oil filter: Removal - Refitting**, page **10A-34**)
- ❑ Fill up the engine oil (see **10A**, **Engine and cylinder block assembly**, **Engine oil: Draining - Refilling**, page **10A-32**) .
- ❑ Start the engine using the starter until the engine oil warning light goes out.
- ❑ Connect the crankshaft position sensor.
- ❑ Refit the engine undertray.
- ❑ Clear the present faults using the **Diagnostic tool**.

K4M or K9K

Equipment required
oil recovery tray
oil change wrench
torque wrench
oil change end piece with an 8 mm square drive

Tightening torques ▽	
drain plug	**20 N.m**

DRAINING

I - AVERAGE CAPACITY OF ENGINE OIL

K4M

- ❑ **4.7 litres** (without oil filter replacement).
- ❑ **4.8 litres** (with oil filter replacement).

K9K

- ❑ **4.0 litres** (without oil filter replacement).
- ❑ **4.1 litres** (with oil filter replacement).

II - RECOMMENDATIONS FOR REPAIR

❑

WARNING

Always check the oil level using the dipstick.

Do not exceed the maximum level on the dipstick (could destroy the engine).

Correct the engine oil level if necessary before delivering the vehicle to the customer.

Note:

When filling up the engine oil, always leave at least **10 minutes** for the oil to drain down before checking with a dipstick.

III - PARTS AND CONSUMABLES FOR REPAIR

- ❑ **parts always to be replaced: Drain plug seal on engine oil sump**.
- ❑ Consumable:
  - Engine oil (see **Engine oil: Specifications**) .

IV - OIL SERVICE

- ❑ Position the vehicle on a two-post lift (see **Vehicle: Towing and lifting**) (02A, Lifting equipment).

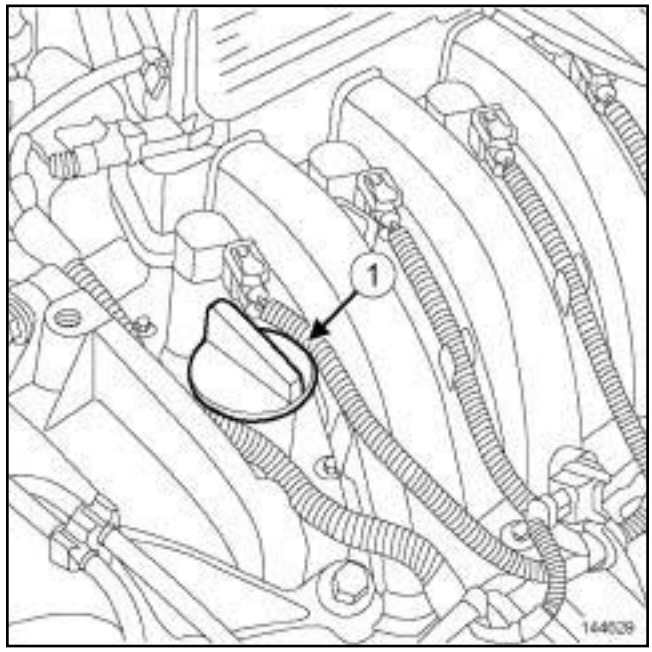

144629

- ❑ Remove:
  - the engine oil filler cap (**1**) ,
  - the dipstick.
- ❑ Place the **oil recovery tray** under the engine.

K4M or K9K

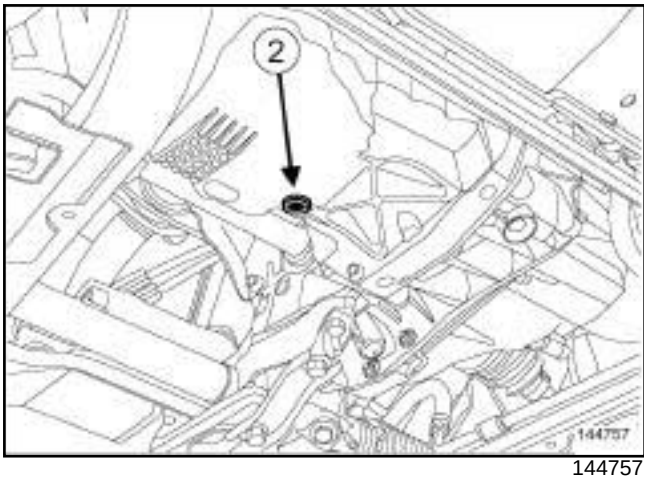

144757

- ❑ Remove the drain plug (**2**) using theor a **oil change wrench**.
- ❑ Let the engine oil flow out completely.
- ❑ Remove the drain plug seal.

Rubber-lipped seal

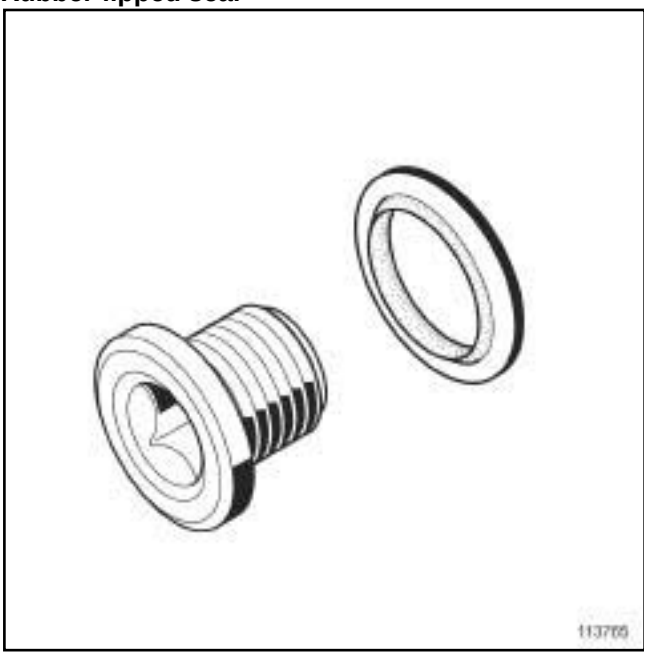

113765

- ❑ Refit a new seal to the drain plug (no direction of fitting).
- ❑ Refit the drain plug.
- ❑ Torque tighten the **drain plug (20 N.m)** using a **torque wrench** fitted with a **oil change end piece with an 8 mm square drive**.
- ❑ Clean any oil run-off from the engine oil sump using a cloth.
- ❑ Remove the **oil recovery tray**.

V - FILLING

- ❑ Fill the engine with oil, respecting the recommended quantity.
- ❑ Wait at least **10 minutes**.
- ❑ Check the oil level using the dipstick.
- ❑ Top up the engine oil level if necessary.
- ❑ Refit:
  - the engine oil filler cap,
  - the dipstick.

K9K

Special tooling required	
Mot. 1329	Oil filter removing tool (76 mm diameter)

WARNING

Always check the oil level using the dipstick.

Do not exceed the maximum level on the dipstick (could destroy the engine).

Correct the engine oil level if necessary before delivering the vehicle to the customer.

Note:

When topping up the engine oil, always leave at least 10 minutes for the oil to drain down before checking with a dipstick.

REMOVAL

OPERATION FOR REMOVAL OF PART CONCERNED

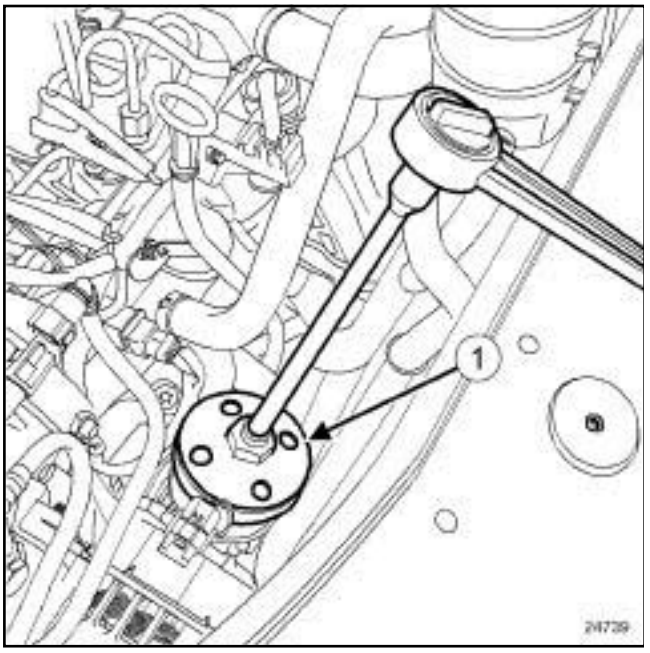

24739

- ❑ Position the **(Mot. 1329)** (**1**) with an extension piece and a ratchet on the oil filter.
- ❑ Remove the oil filter.

REFITTING

I - REFITTING PREPARATION OPERATION

- ❑ **parts always to be replaced: Oil filter**.
- ❑ Lubricate the new oil filter seal with new engine oil.

II - REFITTING OPERATION FOR PART CONCERNED

- ❑ Tighten the oil filter by hand until the oil filter seal makes contact with the oil filter support.
- ❑ Tighten the oil filter 3/4 of a turn manually or using the tool **(Mot. 1329)**.

III - FINAL OPERATION

- ❑ Wipe any oil run-off with a cloth.
- ❑ Check the oil level with the dipstick.
- ❑ Top up the oil level (if necessary).

K4M

Special tooling required	
Mot. 1329	Oil filter removing tool (76 mm diameter)

Equipment required
oil recovery tray

IMPORTANT
Wear leaktight gloves (Nitrile type) for this operation.

WARNING
Always check the oil level using the dipstick.

Do not exceed the maximum level on the dipstick (could destroy the engine).

Correct the engine oil level if necessary before delivering the vehicle to the customer.

Note:

When filling up the engine oil, always leave at least **10 minutes** for the oil to drain down before checking with a dipstick.

When removing the oil filter, check that the oil filter seal is not still stuck to the cylinder block or the oil filter support.

REMOVAL

I - REMOVAL PREPARATION OPERATION

- ❑ Position the vehicle on a two-post lift (see **Vehicle: Towing and lifting**) (02A, Lifting equipment).
- ❑ Remove:
  - the engine undertray bolts,
  - the engine undertray.
- ❑ Place the **oil recovery tray** under the engine.
- ❑ Remove the injector rail protector.

II - REMOVAL OPERATION

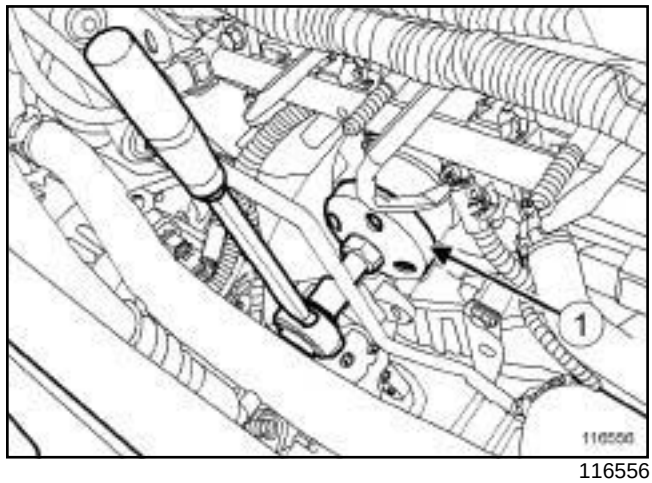

116556

- ❑ Remove the oil filter using the **(Mot. 1329)** (**1**) .

REFITTING

I - REFITTING PREPARATION OPERATION

- ❑ **parts always to be replaced: Oil filter**.
- ❑ Use **SURFACE CLEANER** (see **Vehicle: Parts and consumables for the repair**) (04B, Consumables - Products) to clean and degrease the cylinder block joint face.
- ❑ Lubricate the oil filter seal with new engine oil.

II - REFITTING OPERATION

- ❑ Fit a new oil filter.
- ❑ Tighten the oil filter until it makes contact with the engine.
- ❑ Manually tighten the oil filter by 3/4 of a turn.

III - FINAL OPERATION

- ❑ Refit the injector rail protector.
- ❑ Remove the **oil recovery tray**.
- ❑ Wipe any oil run-off with a cloth.
- ❑ Top up with engine oil recommended by the manufacturer (see **Engine oil: Specifications**) .
- ❑ Start the engine and wait until the oil pressure warning light goes out on the instrument panel.
- ❑ Check for leaks from the oil filter.
- ❑ Refit the engine undertray.
- ❑ Wait at least **10 minutes**.
- ❑ Check the oil level using the dipstick.

K4M

- Top up the engine oil level to the dipstick if necessary (see **10A**, **Engine and cylinder block assembly**, **Engine oil: Draining - Refilling**, page **10A-32**) .

K9K, and 796

Tightening torques ▽	
oil heat exchanger bolt	**39 N.m**
oil filter support bolt	**28 N.m**

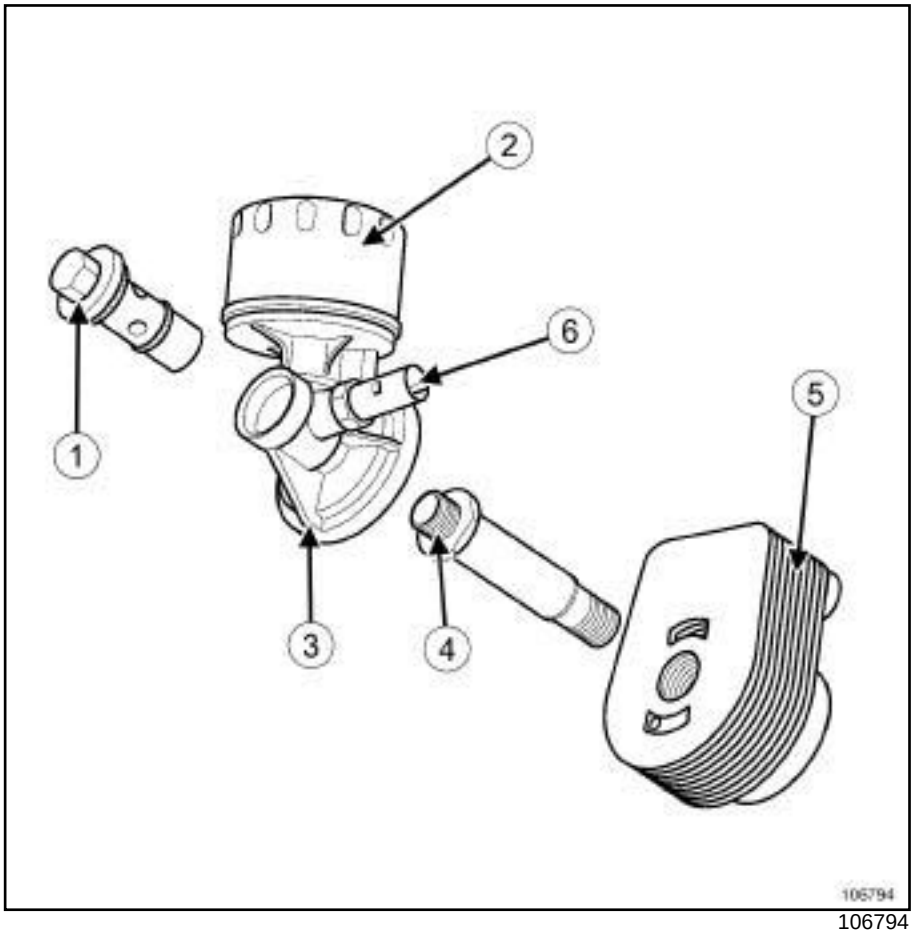

106794

(**1**) Oil filter holder mounting bolt
(**2**) Oil filter
(**3**) Oil filter holder
(**4**) Coolant - oil heat exchanger mounting bolts
(**5**) Coolant - oil heat exchanger
(**6**) Oil pressure sensor

❑

REMOVAL

REMOVAL PREPARATION OPERATION

❑ Position the vehicle on a two-post lift (see **Vehicle: Towing and lifting**) (02A, Lifting equipment).

❑ Remove:

- the engine cover,
- the engine undertray,
- the closure panel component under the diesel filter.

❑ Drain the cooling system (see **19A**, **Cooling**, **Cooling system: Draining - Refilling**, page **19A-6**) .

K9K, and 796

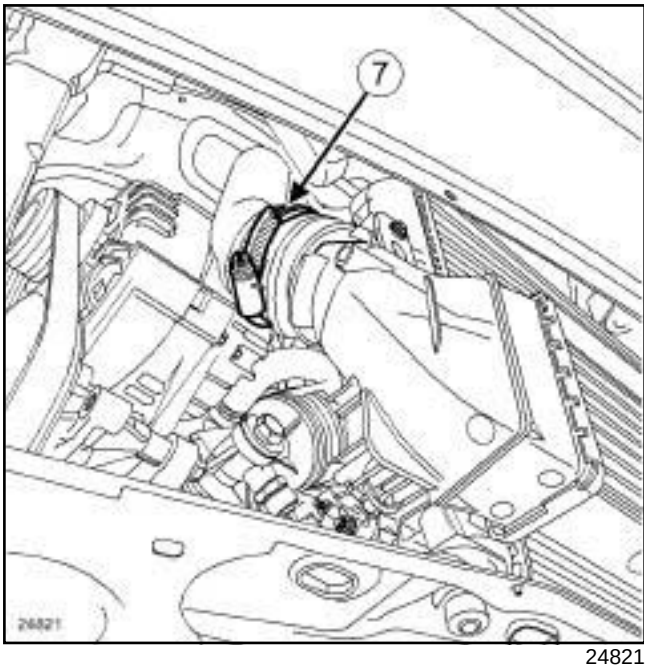

24821

❑ Disconnect the air outlet duct (**7**) on the intercooler.

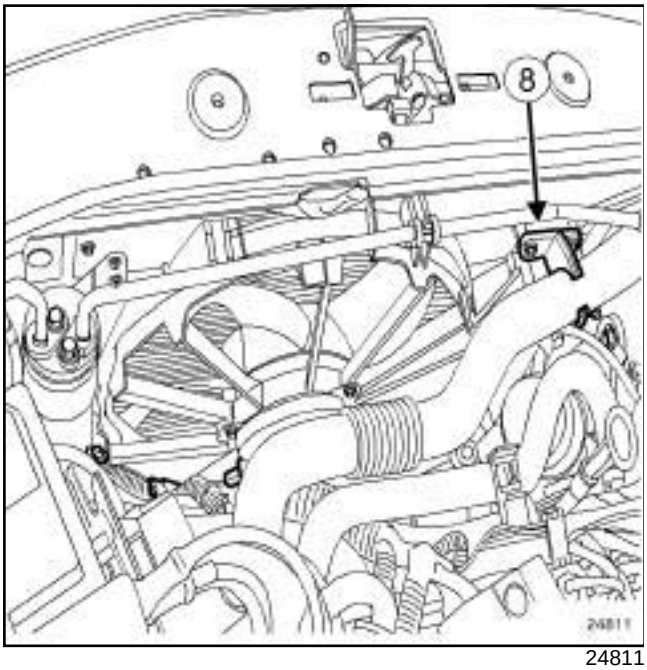

24811

❑ Move aside the air outlet duct.

❑ Remove the air outlet duct support (**8**) from the fan assembly mounting.

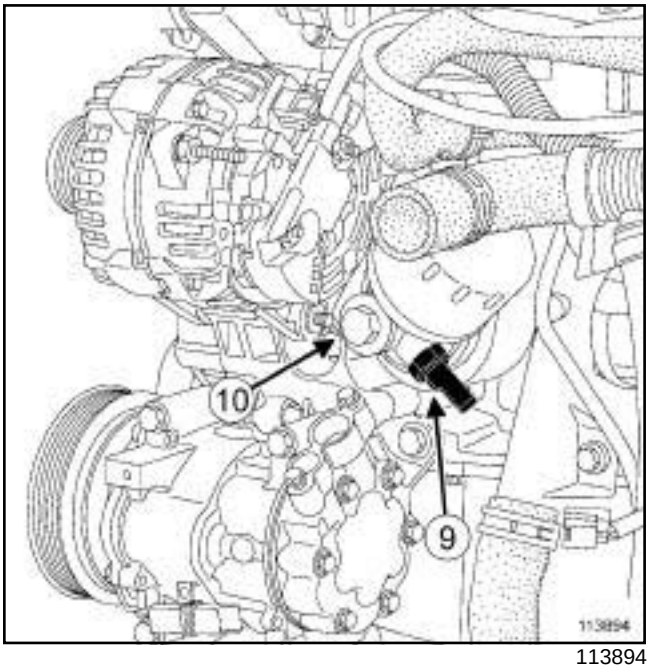

113894

❑ Disconnect the oil pressure sensor connector (**9**) .

❑ Place a container under the engine on the oil filter side.

❑ Remove the bolt (**10**) from the oil filter support.

❑ Remove the oil filter support.

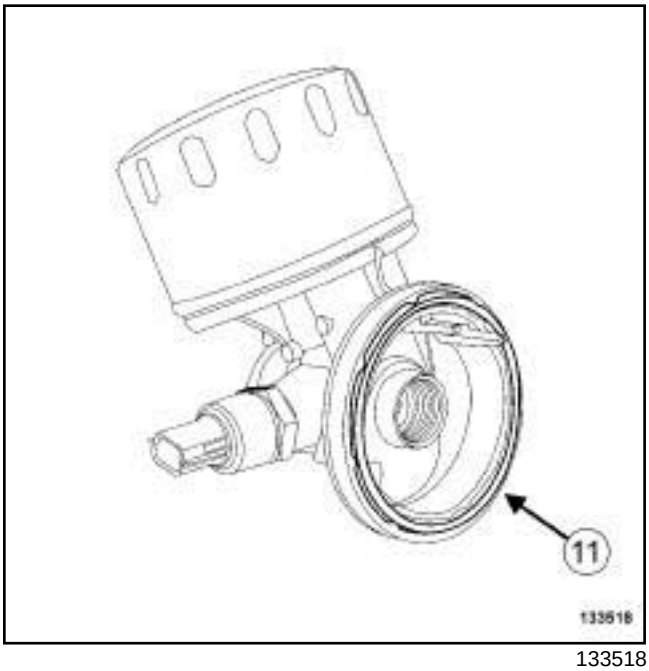

133518

❑ Remove the seal (**11**) from the oil filter support.

K9K, and 796

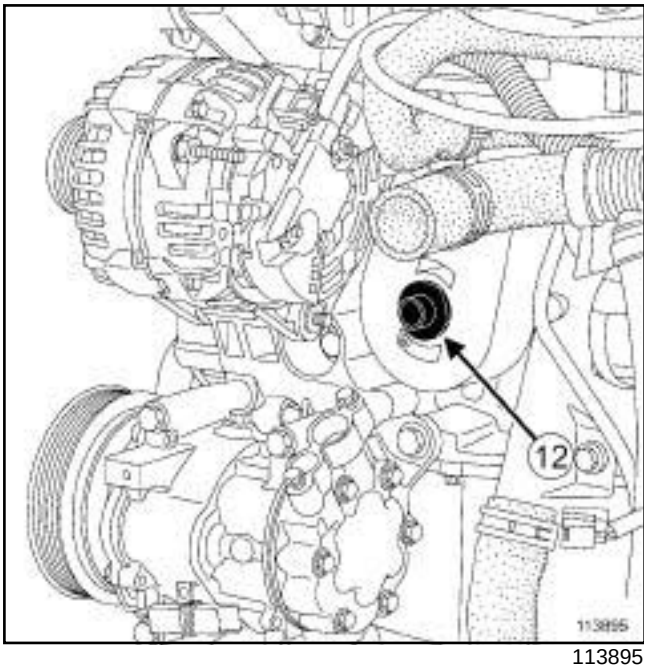

113895

❑ Remove:

- the bolt (**12**) from the oil-coolant heat exchanger,
- the oil-water heat exchanger.

❑ Using a clean cloth, clean up any oil and coolant runs on the cylinder block and on the oil filter support.

REFITTING

I - REFITTING PREPARATION OPERATION

❑ **parts always to be replaced: coolant-engine oil heat exchanger seal on the cylinder block**.

❑ Always replace:

- the seals of the oil filter support bolt,
- the oil filter support seal.

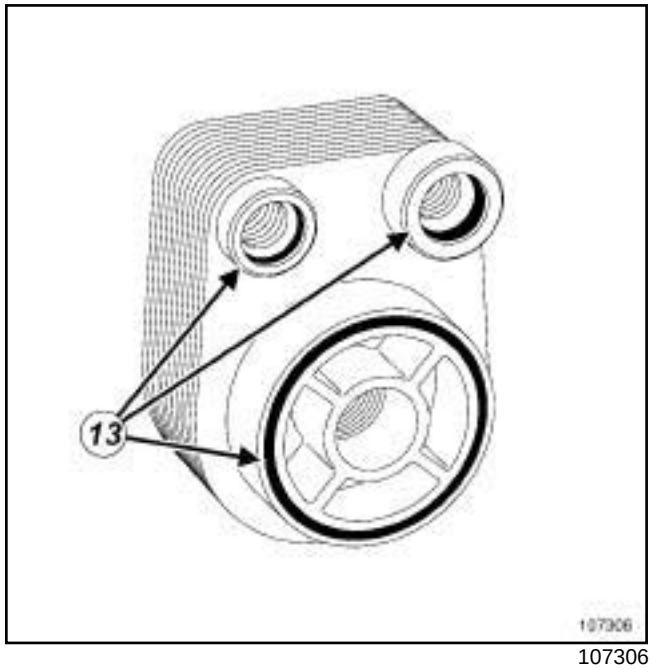

107306

❑ Remove the oil-water heat exchanger seals (**13**) .

❑ Use **SURFACE CLEANER** (see **Vehicle: Parts and consumables for the repair**) (04B, Consumables - Products) to clean and degrease:

- the housing of each seal in the oil-water heat exchanger if it is to be reused,
- the oil-coolant heat exchanger seal face if it is to be reused,
- the mating face of each seal on the coolant pump inlet pipe,
- the joint face on the cylinder block,
- the housing of each oil filter support seal,
- the housing of each seal in the oil filter support.

K9K, and 796

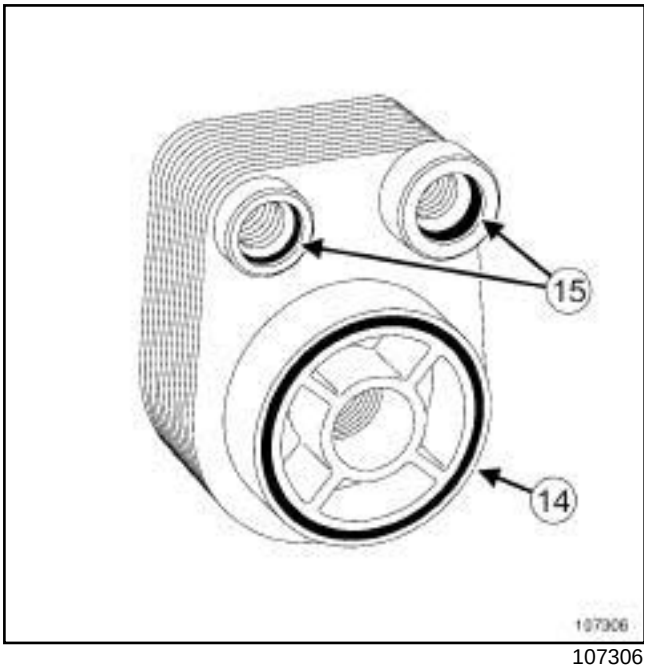

107306

- ❑ Refit new seals (**14**) and (**15**) on the oil-water heat exchanger.
- ❑ Apply soapy water to the two seals ***(15)*** in contact with the coolant pump inlet pipe.

II - REFITTING OPERATION FOR PART CONCERNED

- ❑ Refit the oil-water heat exchanger.
- ❑ Torque tighten the **oil heat exchanger bolt (39 N.m)**.

III - FINAL OPERATION

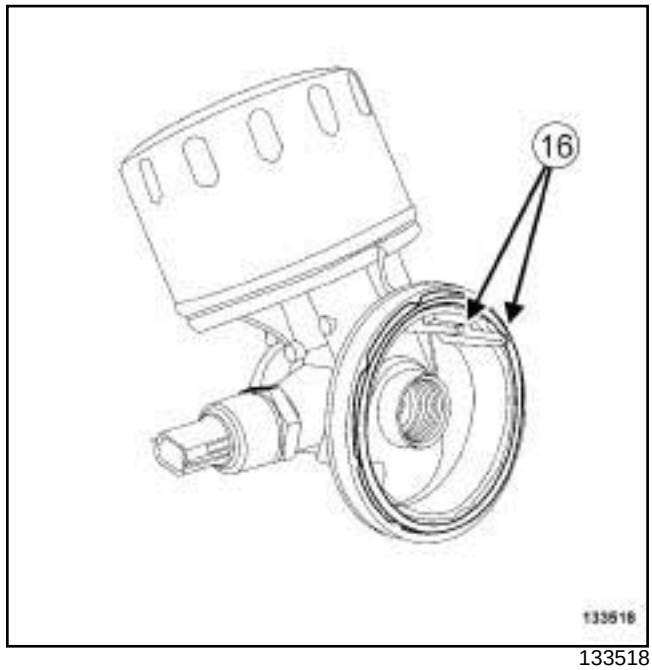

133518

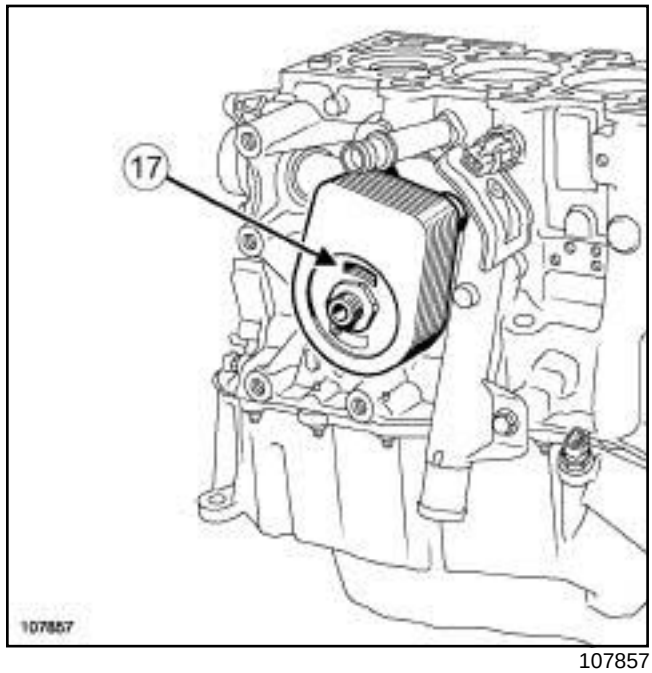

107857

- ❑ Refit:
  - a new seal in the housing of the oil filter support,
  - the oil filter support, positioning the lug (**16**) in the hole (**17**) of the oil-water heat exchanger.
- ❑ Refit the oil filter holder bolt.
- ❑ Torque tighten the **oil filter support bolt (28 N.m)**.
- ❑ Connect the oil pressure sensor connector.
- ❑ Refit the air outlet duct support on the fan assembly mounting.

K9K, and 796

- ❑ Connect the air outlet duct to the intercooler.
- ❑ Fill the cooling system (see **19A**, **Cooling**, **Cooling system: Draining - Refilling**, page **19A-6**) .
- ❑ Refit:
  - the closure panel component under the diesel filter,
  - the engine undertray,
  - the engine cover.
- ❑ Bleed the cooling system (see **19A**, **Cooling**, **Cooling system: Draining - Refilling**, page **19A-6**) .

K9K

Tightening torques ▽	
oil pressure sensor	**33 N.m**

REMOVAL

I - REMOVAL PREPARATION OPERATION

❏ Position the vehicle on a two-post lift (see **Vehicle: Towing and lifting**) (02A, Lifting equipment).

❏ Remove the engine undertray.

II - OPERATION FOR REMOVAL OF PART CONCERNED

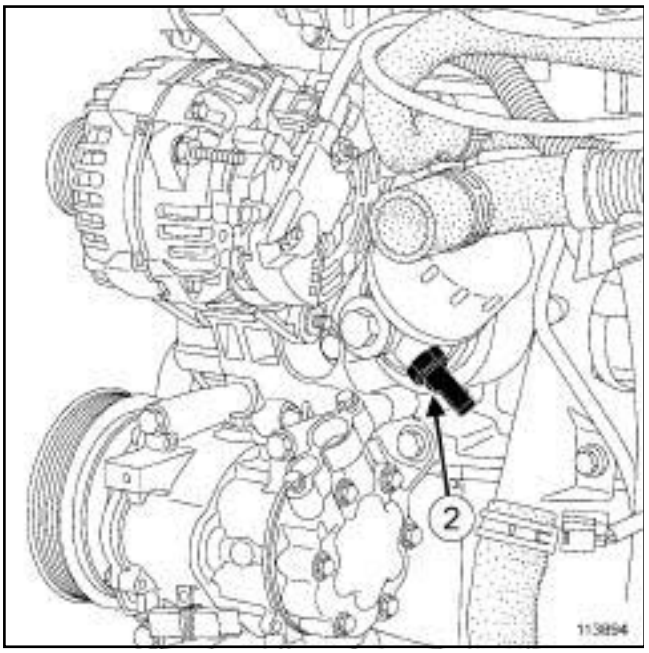

113894

❏ Disconnect the oil pressure sensor connector.

❏ Remove the oil pressure sensor (**2**) using the.

REFITTING

I - REFITTING OPERATION FOR PART CONCERNED

❏ Refit the oil pressure sensor.

❏ Torque tighten the **oil pressure sensor (33 N.m)**.

❏ Connect the oil pressure sensor connector.

II - FINAL OPERATION

❏ Refit the engine undertray.

K4M

Tightening torques ▽	
oil pressure sensor	**35 N.m**

REMOVAL

I - REMOVAL PREPARATION OPERATION

❏ Position the vehicle on a two-post lift (see **Vehicle: Towing and lifting**) (02A, Lifting equipment).

❏ Remove:

- the engine undertray bolts,
- the engine undertray.

II - REMOVAL OPERATION

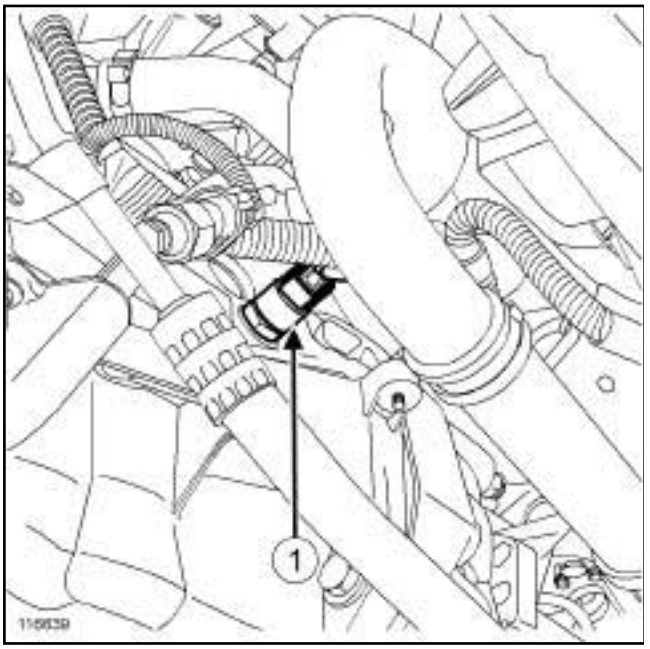

116639

❏ Disconnect the oil pressure sensor connector (**1**) .

❏ Remove the oil pressure sensor.

REFITTING

I - REFITTING OPERATION

❏ Degrease the mating face of the oil pressure sensor on the cylinder block using **SURFACE CLEANER** (see **Vehicle: Parts and consumables for the repair**) (04B, Consumables - Products).

❏ Refit the oil pressure sensor.

❏ Torque tighten the **oil pressure sensor (35 N.m)**.

II - FINAL OPERATION

❏ Connect the oil pressure sensor connector.

❏ Refit the engine undertray.

K9K

Tightening torques ▽	
oil pump bolts	**25 N.m**

REMOVAL

I - REMOVAL PREPARATION OPERATION

❏ Position the vehicle on a two-post lift (see **Vehicle: Towing and lifting**) (02A, Lifting equipment).

❏ Drain the engine oil (see **10A**, **Engine and cylinder block assembly**, **Engine oil: Draining - Refilling**, page **10A-32**) .

❏ Remove the sump (see **10A**, **Engine and cylinder block assembly**, **Lower cover: Removal - Refitting**, page **10A-9**) .

II - OPERATION FOR REMOVAL OF PART CONCERNED

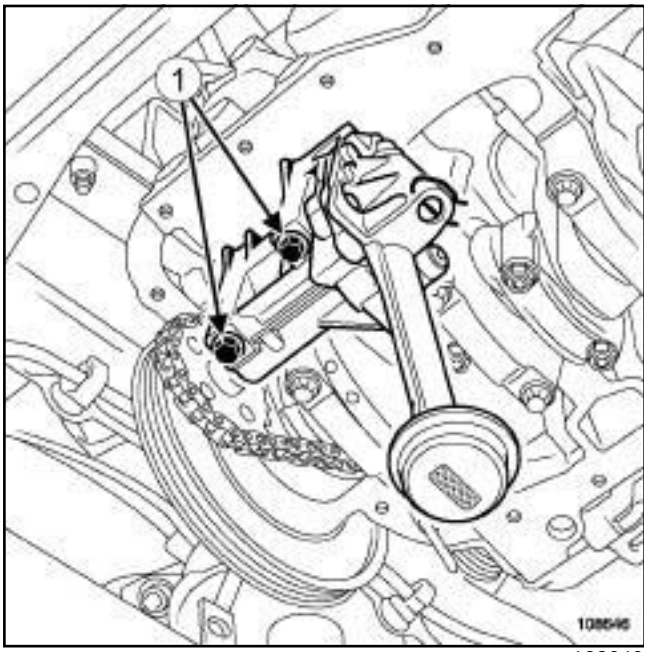

108646

❏ Remove:

- the oil pump bolts (**1**) ,
- the oil pump.

REFITTING

I - REFITTING PREPARATION OPERATION

❏ Check for oil pump centering rings on the cylinder block.

II - REFITTING OPERATION FOR PART CONCERNED

❏ Refit the oil pump.

❏ Torque tighten the **oil pump bolts (25 N.m)**.

III - FINAL OPERATION

❏ Refit the sump (see **10A**, **Engine and cylinder block assembly**, **Lower cover: Removal - Refitting**, page **10A-9**) .

❏ Top up the engine oil (see **10A**, **Engine and cylinder block assembly**, **Engine oil: Draining - Refilling**, page **10A-32**) .

K4M

Tightening torques ▽	
oil pump bolts	**25 N.m**

REMOVAL

I - REMOVAL PREPARATION OPERATION

❏ Position the vehicle on a two-post lift (see **Vehicle: Towing and lifting**) (02A, Lifting equipment).

❏ Drain the engine oil (see **10A**, **Engine and cylinder block assembly**, **Engine oil: Draining - Refilling**, page **10A-32**) .

❏ Remove the sump (see **10A**, **Engine and cylinder block assembly**, **Lower cover: Removal - Refitting**, page **10A-9**) .

II - REMOVAL OPERATION

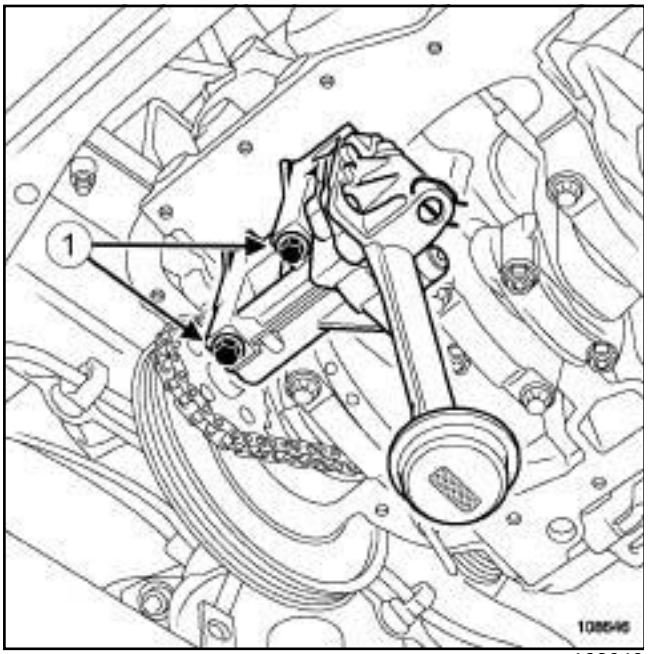

108646

❏ Remove:

- the oil pump bolts (**1**) ,
- the oil pump.

REFITTING

I - REFITTING PREPARATION OPERATION

❏ Check for centering rings on the oil pump.

II - REFITTING OPERATION

❏ Refit the oil pump.

❏ Torque tighten the **oil pump bolts (25 N.m)**.

III - FINAL OPERATION

❏ Refit the sump (see **10A**, **Engine and cylinder block assembly**, **Lower cover: Removal - Refitting**, page **10A-9**) .

❏ Top up the engine oil (see **10A**, **Engine and cylinder block assembly**, **Engine oil: Draining - Refilling**, page **10A-32**) .

K4M or K9K

Oil pressure tables:

Engine	Minimum oil pressure (bar)		Maximum oil pressure (bar)
	Idling speed	3000 rpm	3000 rpm
D4D, D4F	**1.5**	**3.9**	**5.3**
K7J, K7M	**1.3**	**3.7**	**5.0**

Engine	Minimum oil pressure (bar)		Maximum oil pressure (bar)
	Idling speed	4000 rpm	4000 rpm
K4M	**0.5**	**3.1**	**4.4**
K9K	**0.8**	**3.4**	**5.2**

End pieces to be used:

Engine	End pieces
D4D, D4F	**C + F**
K4M, K7J, K7M, K9K	**E + C + F**

I - REMOVAL PREPARATION OPERATION

❑

WARNING

Always check the oil level using the dipstick.

Do not exceed the maximum level on the dipstick (could destroy the engine).

Correct the engine oil level if necessary before delivering the vehicle to the customer.

Note:

When topping up the engine oil, always leave at least **10 minutes** before checking the level with a dipstick.

II - CHECK

❑ Remove the oil pressure sensor (see **10A**, **Engine and cylinder block assembly**, **Oil pressure sensor: Removal - Refitting**, page **10A-42**) .

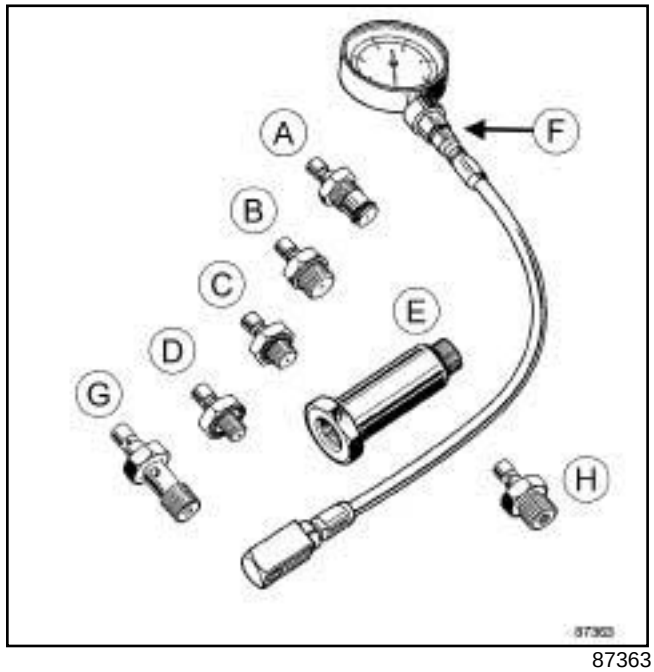

87363

❑ In place of the oil pressure sensor, fit thewith suitable adapters using theor a **22 mm** long socket.

❑ Start the vehicle.

❑ Monitor the engine oil pressure as the oil temperature rises (approximately **80°C** or the first time the engine cooling fan is activated); it should not be less than the pressure at idle speed.

❑ If the oil pressure is lower than the pressure at idle speed, check that:

- the oil filter is not clogged,
- dirt or swarf is not present in the engine oil,
- the oil pump is in good condition and being correctly driven.

❑ Check the oil pressure in comparison with the values given in the table above.

❑ Switch off the engine.

❑ Remove thewith the end pieces.

❑ Refit the oil pressure sensor (see **10A**, **Engine and cylinder block assembly**, **Oil pressure sensor: Removal - Refitting**, page **10A-42**) .

❑ Wipe any oil run-off with a cloth.

❑ Wait at least **10 minutes**.

❑ Check the oil level using the dipstick.

K4M or K9K

- Top up the engine oil level if necessary (see **Engine oil: Specifications**) .
- Start the vehicle and check that there are no oil leaks at the oil pressure sensor.

K4M, and POWER ASSISTED STEERING, and AIR CONDITIONING

Tightening torques ▽	
multifunction support bolts on the cylinder block	**44 N.m**
lower bolt of the multifunction support on the sump	**25 N.m**

REMOVAL

I - REMOVAL PREPARATION OPERATION

❏ Position the vehicle on a two-post lift (see **Vehicle: Towing and lifting**) (02A, Lifting equipment).

❏ Disconnect the battery (see **Battery: Removal - Refitting**) (80A, Battery).

❏ Remove:

- the front right-hand wheel (see **Wheel: Removal - Refitting**) (35A, Wheels and tyres),
- the front right-hand wheel arch side liner,
- the injector rail protector,
- the engine undertray bolts,
- the engine undertray.

❏ Remove the front bumper (see **Front bumper assembly: Exploded view**) and (see **Exterior body front trim assembly: Exploded view**) (55A, Exterior protection).

❏ Disconnect fuel supply pipe on the injector rail.

❏ Remove:

- the accessories belt (see **11A**, **Top and front of engine**, **Accessories belt: Removal - Refitting**, page **11A-2**) ,
- the alternator (see **16A**, **Starting - Charging**, **Alternator: Removal - Refitting**, page **16A-1**) .

❏ Remove (see **Power-assisted steering pump: Removal - Refitting**) (36B, Power-assisted steering):

- the bolt from the power-assisted steering high pressure pipe on the cylinder block,
- the bolts from the power-assisted steering pump on the multifunction support (without opening the circuit).

❏ Attach the power-assisted steering pump to the front end panel.

❏ Disconnect the connector from the air conditioning compressor.

❏ Remove the air conditioning compressor bolts (without opening the circuit) (see **Compressor: Removal - Refitting**) (62A, Air conditioning).

❏ Attach the air conditioning compressor to the subframe.

II - REMOVAL OPERATION

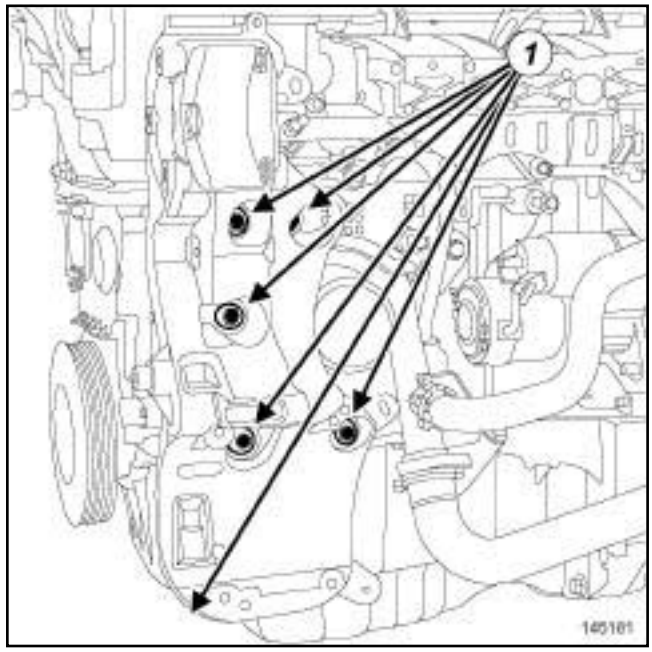

145181

❏ Remove:

- the multifunction support bolts (**1**) ,
- the multifunction support.

K4M, and POWER ASSISTED STEERING, and AIR CONDITIONING

REFITTING

I - REFITTING OPERATION

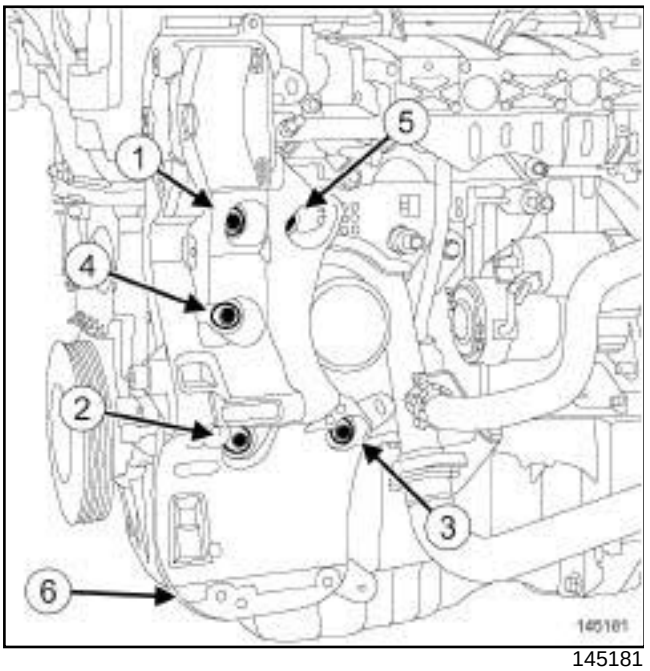

145181

- ❑ Refit the multifunction support.
- ❑ Position bolts (**1**) to (**6**) without tightening them.
- ❑ Pretighten the multifunction support bolts (**1**) and (**2**) on the cylinder block **5 N.m**.
- ❑ Loosen bolts (**1**) and (**2**) of the multifunction support by one half-turn.
- ❑ Pretighten the multifunction support bolt (**6**) on the sump **5 N.m**.
- ❑ Pretighten the multifunction support bolts (**1**) and (**2**) on the cylinder block **5 N.m**.
- ❑ Pretighten in order (**3**) , (**4**) , (**5**) , (**6**) the multifunction support bolts on the cylinder block (**5 N.m**).
- ❑ Torque tighten in order (**1**) , (**2**) , (**3**) , (**4**) , (**5**) the **multifunction support bolts on the cylinder block (44 N.m)**.
- ❑ Torque tighten the **lower bolt of the multifunction support on the sump (25 N.m)** (**6**) .

II - FINAL OPERATION

- ❑ Refit the air conditioning compressor (see **Compressor: Removal - Refitting**) (62A, Air conditioning).
- ❑ Connect the air conditioning compressor connector.
- ❑ Refit (see **Power-assisted steering pump: Removal - Refitting**) (36B, Power-assisted steering):
  - the power-assisted steering pump,
  - the bolt of the power-assisted steering high pressure pipe on the cylinder block.
- ❑ Refit:
  - the alternator (see **16A**, **Starting - Charging**, **Alternator: Removal - Refitting**, page **16A-1**) ,
  - the accessories belt (see **11A**, **Top and front of engine**, **Accessories belt: Removal - Refitting**, page **11A-2**) .
- ❑ Connect the fuel supply pipe on the injector rail.
- ❑ Refit the front bumper (see **Front bumper assembly: Exploded view**) and (see **Exterior body front trim assembly: Exploded view**) (55A, Exterior protection).
- ❑ Refit:
  - the engine undertray,
  - the injector rail protector.
- ❑ Connect the battery (see **Battery: Removal - Refitting**) (80A, Battery).

K4M, and STANDARD HEATING RECIRCULATION

Tightening torques ▽	
multifunction support bolts on the cylinder block	**44 N.m**
multifunction support bolt on the sump	**25 N.m**

REMOVAL

I - REMOVAL PREPARATION OPERATION

❑ Position the vehicle on a two-post lift (see **Vehicle: Towing and lifting**) (02A, Lifting equipment).

❑ Disconnect the battery (see **Battery: Removal - Refitting**) (80A, Battery).

❑ Remove:

- the front right-hand wheel (see **Wheel: Removal - Refitting**) (35A, Wheels and tyres),
- the front right-hand wheel arch side liner,
- the engine undertray bolts,
- the engine undertray.

❑ Remove the front bumper (see **Front bumper assembly: Exploded view**) and (see **Exterior body front trim assembly: Exploded view**) (55A, Exterior protection).

❑ Remove:

- the accessories belt (see **11A**, **Top and front of engine**, **Accessories belt: Removal - Refitting**, page **11A-2**) ,
- the alternator (see **16A**, **Starting - Charging**, **Alternator: Removal - Refitting**, page **16A-1**) .

POWER ASSISTED STEERING

❑ Remove (see **Power-assisted steering pump: Removal - Refitting**) (36B, Power-assisted steering):

- the power-assisted steering pump bolts,
- the high pressure pipe bolt on the cylinder block.

❑ Attach the power-assisted steering pump to the front end panel.

II - REMOVAL OPERATION

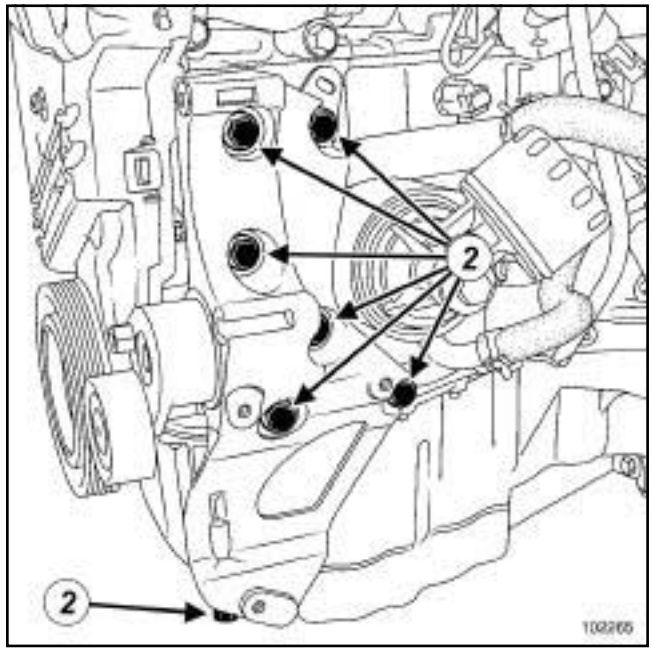

102265

❑ Remove:

- the multifunction support bolts (**2**) ,
- the multifunction support.

K4M, and STANDARD HEATING RECIRCULATION

REFITTING

I - REFITTING OPERATION

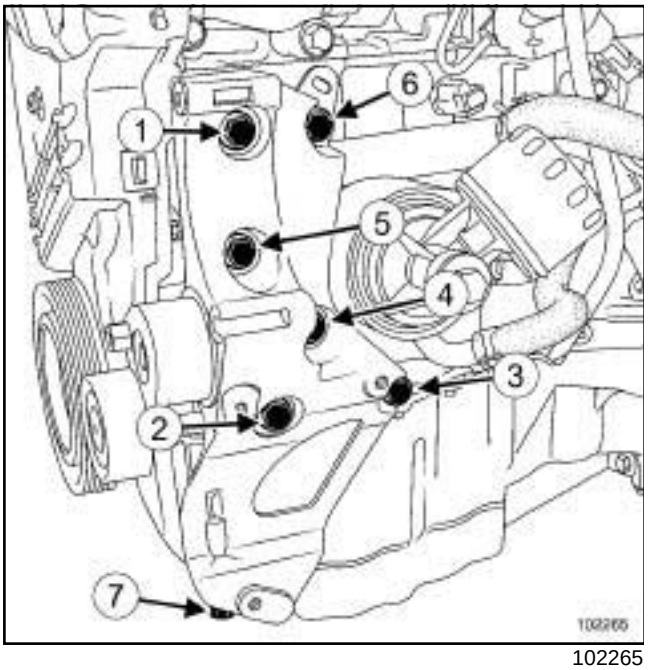

102265

- ❑ Refit the multifunction support.
- ❑ Position bolts (**1**) to (**7**) without tightening them.
- ❑ Pretighten the multifunction support bolts (**1**) and (**2**) on the cylinder block **5 N.m**.
- ❑ Loosen bolts (**1**) and (**2**) a half-turn.
- ❑ Pretighten the multifunction support bolt (**7**) on the sump **5 N.m**.
- ❑ Pretighten the multifunction support bolts (**1**) and (**2**) on the cylinder block **5 N.m**.
- ❑ Pretighten the multifunction support bolts (**3**) , (**4**) , (**5**) , (**6**) on the cylinder block **5 N.m**.
- ❑ Torque tighten in order **(1), (2), (3), (4), (5), (6)** the **multifunction support bolts on the cylinder block (44 N.m)**.
- ❑ Torque tighten the **multifunction support bolt on the sump (25 N.m)** (**7**) .

II - FINAL OPERATION

POWER ASSISTED STEERING

- ❑ Refit (see **Power-assisted steering pump: Removal - Refitting**) (36B, Power-assisted steering):
  - the power-assisted steering pump,
  - the power-assisted steering pump bolts,
  - the high pressure pipe bolt on the cylinder block.

- ❑ Refit:
  - the alternator (see **16A**, **Starting - Charging**, **Alternator: Removal - Refitting**, page **16A-1**) ,
  - the accessories belt (see **11A**, **Top and front of engine**, **Accessories belt: Removal - Refitting**, page **11A-2**) .
- ❑ Refit the front bumper (see **Front bumper assembly: Exploded view**) and (see **Exterior body front trim assembly: Exploded view**) (55A, Exterior protection).
- ❑ Refit the front right-hand wheel (see **Wheel: Removal - Refitting**) (35A, Wheels and tyres).
- ❑ Connect the battery (see **Battery: Removal - Refitting**) (80A, Battery).

K9K

Tightening torques ▽	
multifunction support bolts on the cylinder block	**44 N.m**
multifunction support bolt on the sump	**25 N.m**

REMOVAL

I - REMOVAL PREPARATION OPERATION

❏ Position the vehicle on a two-post lift (see **Vehicle: Towing and lifting**) (02A, Lifting equipment).

❏ Disconnect the battery (see **Battery: Removal - Refitting**) (80A, Battery).

❏ Remove:

- the front right-hand wheel (see **Wheel: Removal - Refitting**) (35A, Wheels and tyres),
- the front right-hand wheel arch side liner,
- the engine undertray bolts,
- the engine undertray,
- the front bumper (see **Front bumper assembly: Exploded view**) and (see **Exterior body front trim assembly: Exploded view**) (55A, Exterior protection),
- the accessories belt (see **11A**, **Top and front of engine**, **Accessories belt: Removal - Refitting**, page **11A-2**) ,
- the alternator (see **16A**, **Starting - Charging**, **Alternator: Removal - Refitting**, page **16A-1**) .

POWER ASSISTED STEERING, and STANDARD HEATING RECIRCULATION

❏ Remove the bolts from the power-assisted steering pump on the multifunction support (without opening the circuit) (see **Power-assisted steering pump: Removal - Refitting**) (36B, Power-assisted steering).

❏ Attach the power-assisted steering pump to the front end panel.

AIR CONDITIONING

❏ Disconnect the air conditioning compressor connector.

❏ Remove the air conditioning compressor bolts (without opening the circuit) (see **Compressor: Removal - Refitting**) (62A, Air conditioning).

❏ Attach the air conditioning compressor to the lower front cross member.

❏ Unpick the wiring harness on the multifunction support.

II - REMOVAL OPERATION

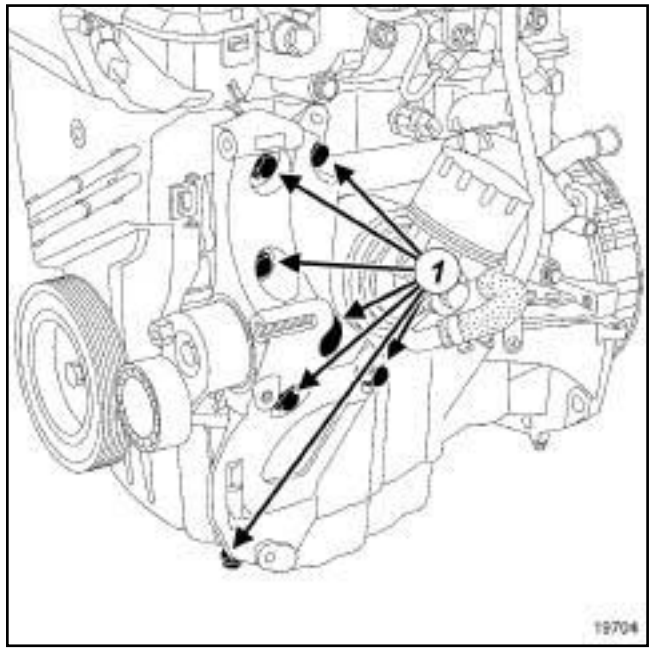

19704

❏ Remove:

- the multifunction support bolts (**1**) ,
- the multifunction support.

K9K

REFITTING

REFITTING OPERATION

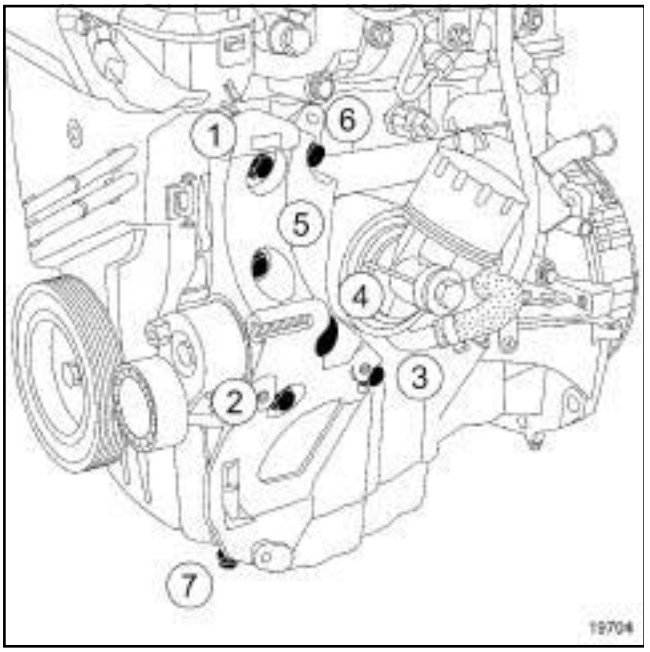

19704

- ❑ Refit the multifunction support.
- ❑ Position bolts (**1**) to (**7**) without tightening them.
- ❑ Pretighten the multifunction support bolts (**1**) and (**2**) on the cylinder block **5 N.m**.
- ❑ Loosen bolts (**1**) and (**2**) a half-turn.
- ❑ Pretighten the multifunction support bolt (**7**) on the sump **5 N.m**.
- ❑ Pretighten the multifunction support bolts (**1**) and (**2**) on the cylinder block **5 N.m**.
- ❑ Pretighten the multifunction support bolts (**3**) , (**4**) , (**5**) , (**6**) on the cylinder block **5 N.m**.
- ❑ Torque tighten in order (**1**) , (**2**) , (**3**) , (**4**) , (**5**) , (**6**) the **multifunction support bolts on the cylinder block (44 N.m)**.
- ❑ Torque tighten the **multifunction support bolt on the sump (25 N.m)** (**7**) .
- ❑ Proceed in the reverse order to removal.

K4M

Special tooling required	
Mot. 1448	Remote operation pliers for hose clips.
Mot. 1390	Support for removal - refitting of engine - gearbox assembly

Equipment required
refrigerant charging station

Tightening torques ▽	
nut on the rubber pad support of the left-hand suspended engine mounting	**62 N.m**
exhaust flange bolts	**21 N.m**
front axle subframe tie-rod upper bolts	**21 N.m**
anti-roll bar tie rod upper bolts	**37 N.m**
earth strap bolt on the gearbox	**21 N.m**
power-assisted steering low pressure pipe bolt on the front axle sub-frame	**21 N.m**
power-assisted steering pipe bolts on the gear-box support	**21 N.m**
power-assisted steering pipe bolts on the gear-box	**21 N.m**
power-assisted steering pipe bolt on the cylinder block	**21 N.m**

IMPORTANT
Wear cut-resistant gloves during the operation.

REMOVAL

I - REMOVAL PREPARATION OPERATION

❑

IMPORTANT
To prevent the vehicle from falling, lash it to the vehicle lift using a strap.

❑ Position the vehicle on a two-post lift (see **Vehicle: Towing and lifting**) (02A, Lifting equipment).

AIR CONDITIONING

❑ Drain the refrigerant circuit using the tool **refrigerant charging station** (see **Refrigerant circuit: Draining - Filling**) (62A, Air conditioning).

❑ Remove:

- the air inlet sleeve,
- the battery (see **Battery: Removal - Refitting**) (80A, Battery),
- the air resonator (see **12A**, **Fuel mixture**, **Air resonator: Removal - Refitting**, page **12A-2**) ,
- the air filter unit (see **12A**, **Fuel mixture**, **Air filter unit: Removal - Refitting**, page **12A-6**) ,
- the injector rail protector,
- the battery tray,
- the injection computer (see **17B**, **Petrol injection**, **Petrol injection computer: Removal - Refitting**, page **17B-7**) .

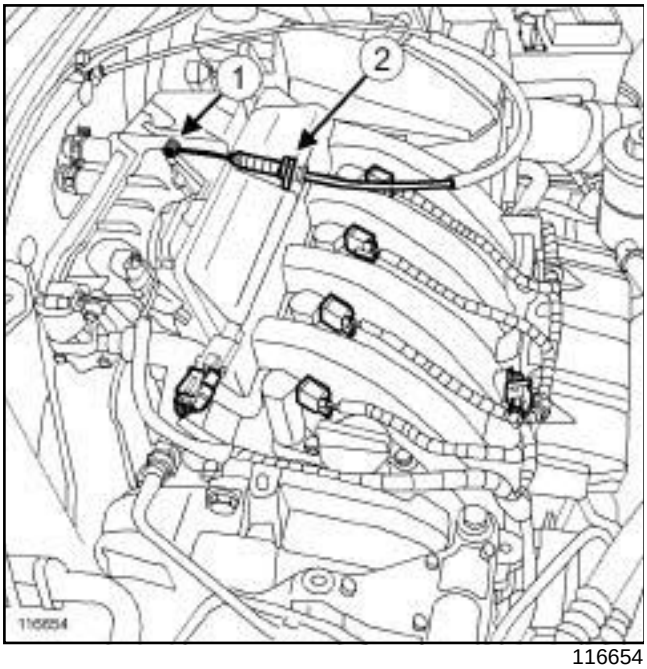

116654

- ❑ Disconnect the accelerator cable on the throttle valve at (**1**) .
- ❑ Remove the accelerator cable from the inlet distributor at (**2**) .

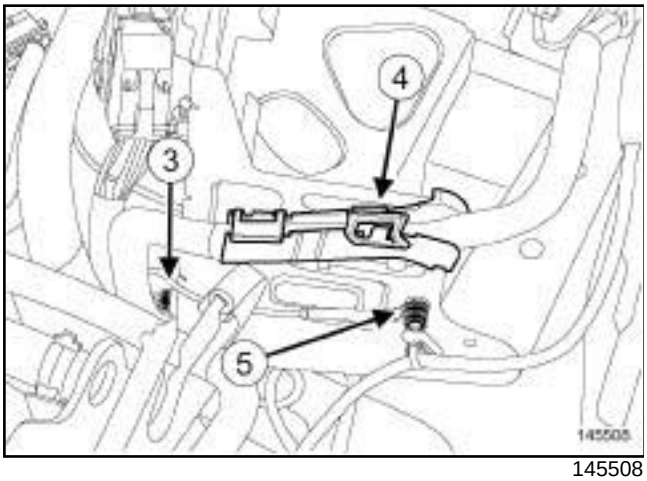

145508

- ❑ Remove the engine wiring bolt (**3**) on the battery mounting.
- ❑ Unclip the battery wiring at (**4**) .
- ❑ Remove the earth strap bolt (**5**) on the battery mounting.

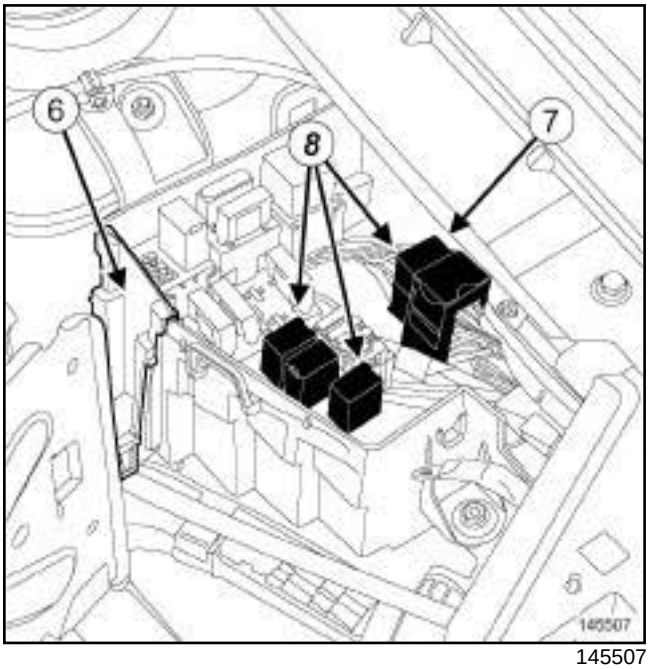

145507

- ❑ Remove the fuse and relay box cover.
- ❑ Remove the side protector (**6**) of the fuse and relay box.
- ❑ Disconnect the engine harness - front wiring connector (**7**) .
- ❑ Unclip the engine harness fuse holders and relays (**8**) from their mountings on the fuse and relay box in the engine compartment.
- ❑ Position the engine harness, fuses and relays on the engine.
- ❑ Remove:
  - the front wheels (see **Wheel: Removal - Refitting**) (35A, Wheels and tyres),
  - the engine undertray bolts,
  - the engine undertray,
  - the front bumper (see **Front bumper assembly: Exploded view**) and (see **Exterior body front trim assembly: Exploded view**) (55A, Exterior protection),
  - the front wheel arch liners (see **Exterior body front trim assembly: Exploded view**) (55A, Exterior protection).
- ❑ Drain:
  - the engine oil if necessary (see **10A**, **Engine and cylinder block assembly**, **Engine oil: Draining - Refilling**, page **10A-32**) ,
  - the gearbox oil (see **Manual gearbox oils: Draining - Filling**) (21A, Manual gearbox),

K4M

- the cooling system (see **19A**, **Cooling**, **Cooling system: Draining - Refilling**, page **19A-6**) .

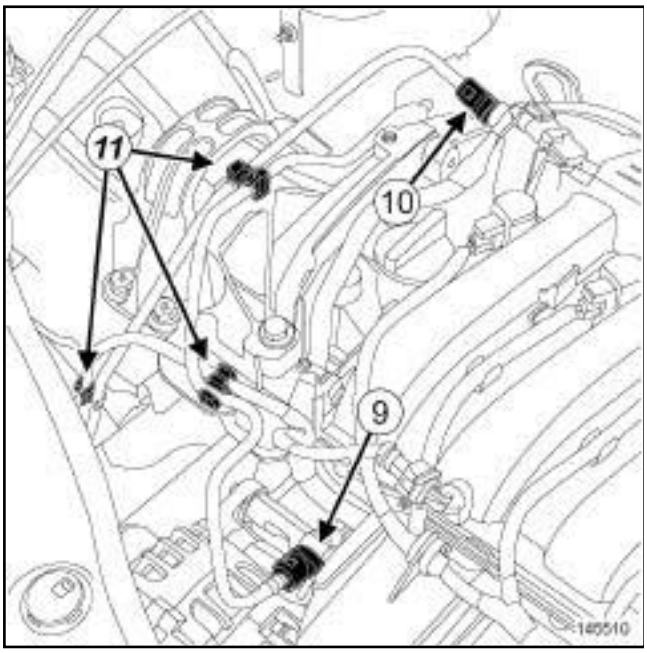

145510

❑ Disconnect:

- the fuel supply pipe (**9**) on the injector rail,
- the petrol vapour rebreather pipe (**10**) .

WARNING
To avoid any corrosion or damage, protect the areas on which fuel is likely to run.

❑ Fit blanking plugs on the fuel supply pipe.

❑ Unclip the pipes at (**11**) .

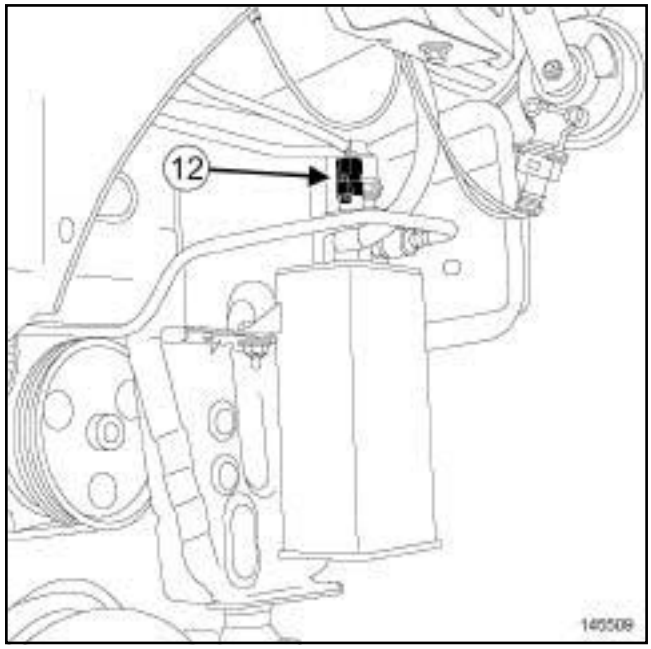

145509

❑ Disconnect the connector (**12**) from the fuel vapour recirculation solenoid valve.

❑ Disconnect (see **Power-assisted steering pump: Removal - Refitting**) (36B, Power-assisted steering):

- the power-assisted steering low pressure hose on the power-assisted steering pump using the **(Mot. 1448)** and drain the circuit,
- the power-assisted steering high pressure pipe on the power-assisted steering pump,
- the connector from the power-assisted steering pressure switch.

K4M

STANDARD HEATING RECIRCULATION

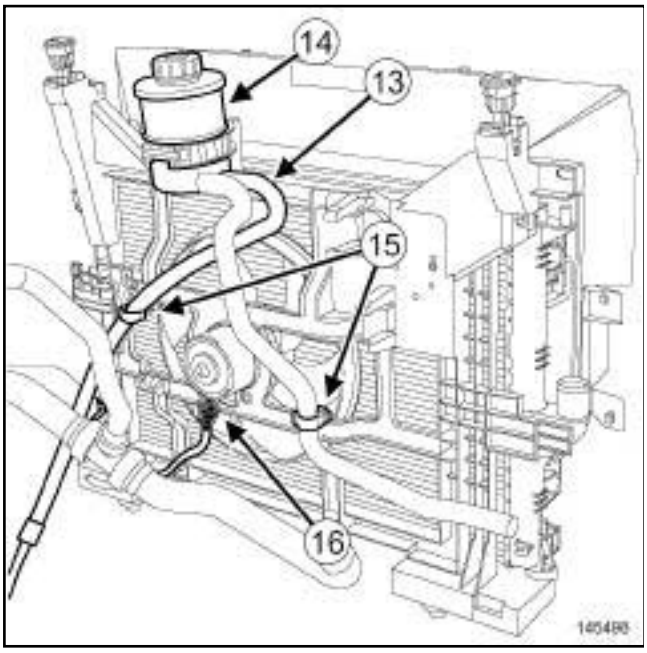

145498

- ❑ Remove:
  - the power-assisted steering low pressure pipe (**13**) on the oil reservoir using the **(Mot. 1448)**,
  - the power assisted steering oil reservoir (**14**) ,
  - the bolt of the power-assisted steering high pressure pipe on the cylinder block.
- ❑ Unclip the power-assisted steering pipes on the fan assembly mounting at (**15**) .
- ❑ Disconnect the fan assembly connector (**16**) .

AIR CONDITIONING

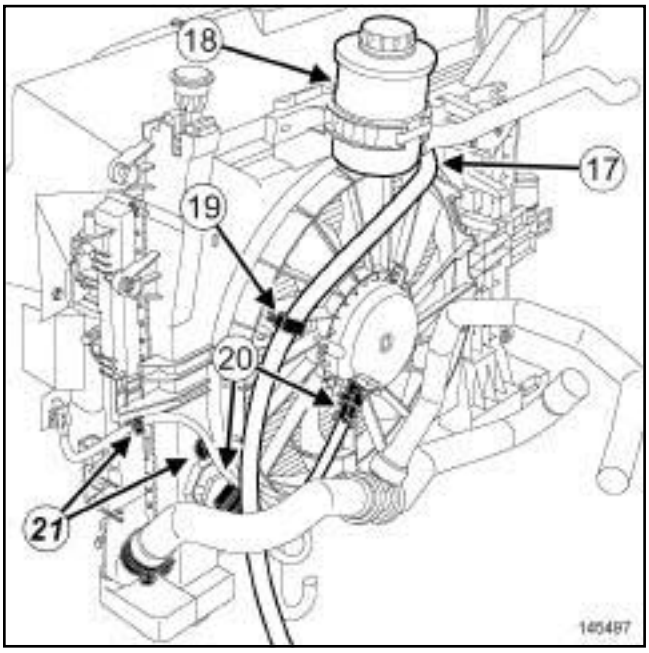

145497

- ❑ Remove:
  - the power-assisted steering low pressure pipe (**17**) on the oil reservoir using the **(Mot. 1448)**,
  - the power assisted steering oil reservoir (**18**) ,
  - the bolt of the power-assisted steering high pressure pipe on the cylinder block.
- ❑ Unclip the power-assisted steering pipes on the fan assembly mounting at (**19**) .
- ❑ Disconnect the connectors (**20**) from the fan assembly.
- ❑ Unclip the fan assembly wiring at (**21**) .

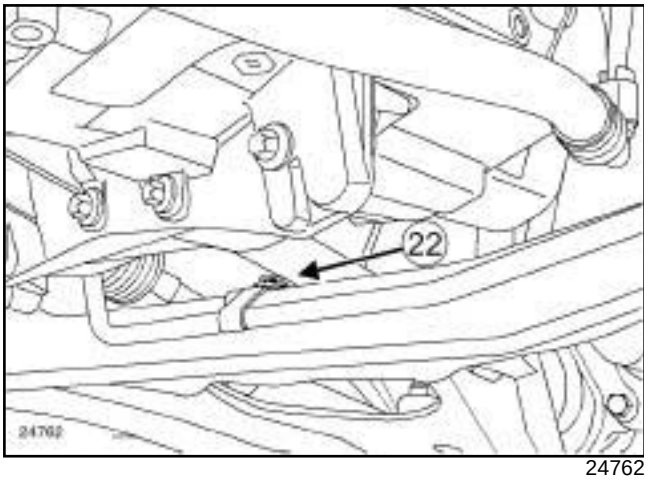

24762

❑ Remove the power-assisted steering low pressure pipe bolt (**22**) on the front axle subframe.

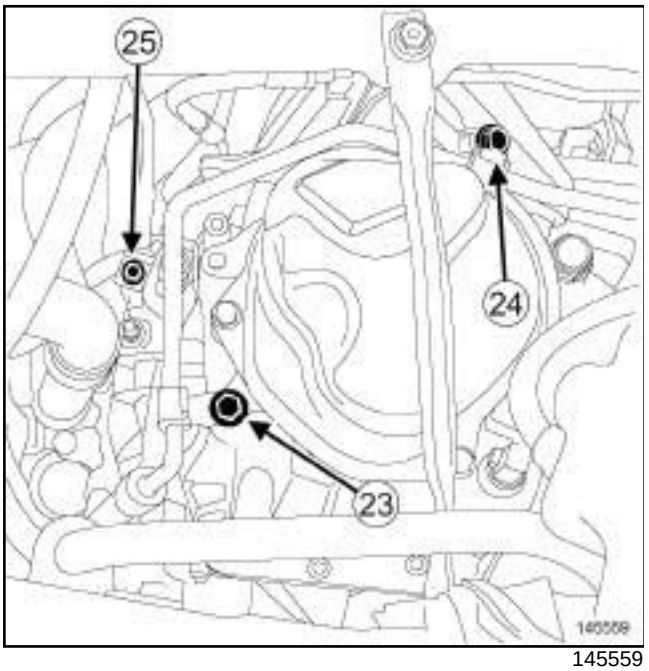

145559

❑ Remove:

- the power-assisted steering high pressure pipe bolt (**23**) on the gearbox,
- the power-assisted steering high pressure pipe bolt (**24**) on the gearbox support,
- the earth strap bolt (**25**) on the gearbox.

AIR CONDITIONING

❑ Remove (see **Compressor: Removal - Refitting**) (62A, Air conditioning):

- the pipe retaining bracket bolt on the compressor,
- the pipe union bolts on the compressor.

> Note:
> Plugs must be fitted on the hoses to prevent moisture from entering the system.

❑ Disconnect the compressor pipes.

❑ Fit blanking plugs in the pipe openings.

❑ Disconnect the air conditioning pressostat connector.

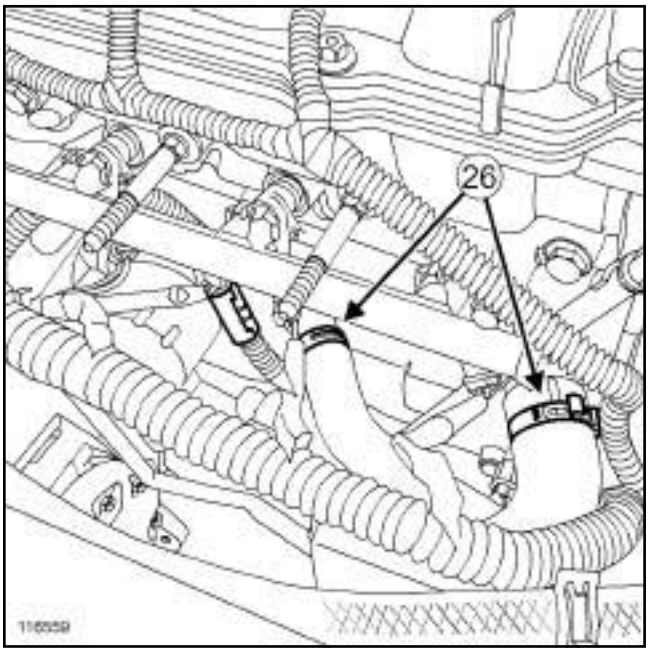

116559

❑ Move aside the cooling hose clips (**26**) on the coolant pump inlet pipe using the **(Mot. 1448)**.

❑ Disconnect:

- the cooling hoses on the coolant pump inlet pipe,
- the vacuum pipe on the inlet distributor chamber.

K4M

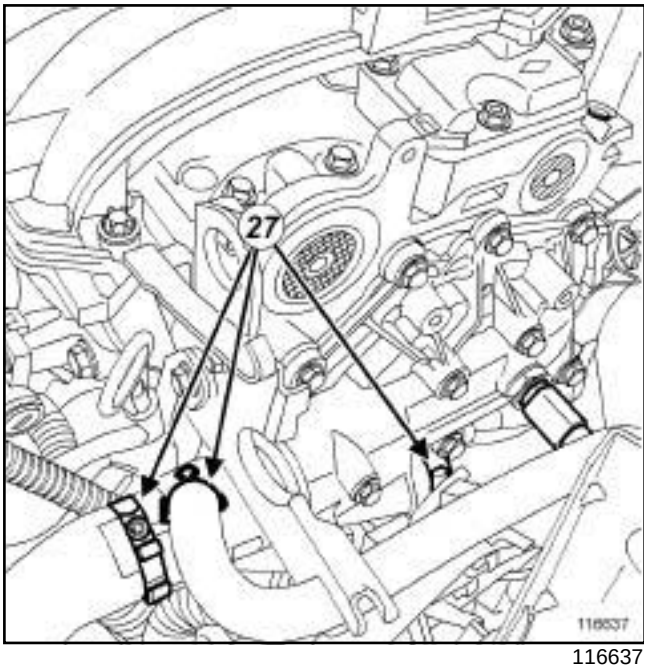

116637

- ❑ Move aside the clips (**27**) of the coolant hoses on the water chamber using the **(Mot. 1448)**.
- ❑ Disconnect the cooling hoses from the water chamber.
- ❑ Unclip the downstream oxygen sensor wiring on the steering box heat shield.
- ❑ Disconnect the downstream oxygen sensor connector.

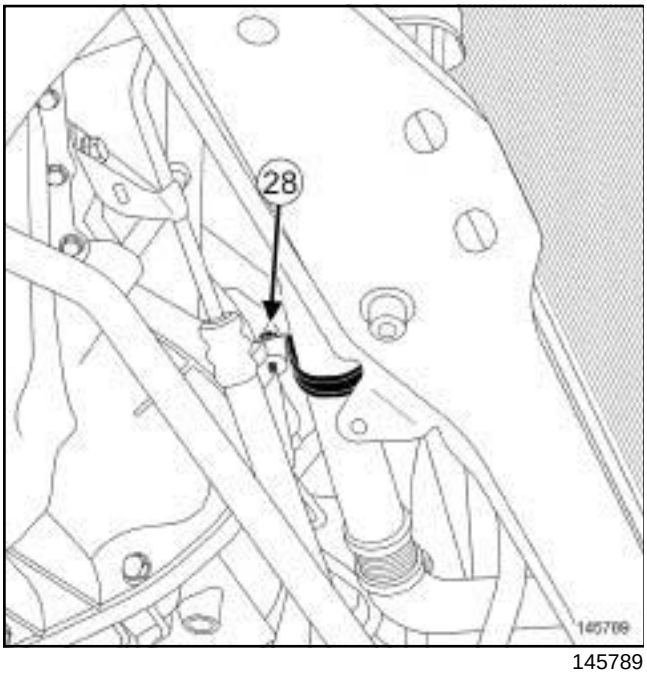

145789

- ❑ Remove the cooling pipe support bolt (**28**) on the sump.
- ❑ Remove (see) (36A, Steering assembly):
  - the heat shield bolts on the steering box,
  - the steering box heat shield,
  - the steering box bolts on the front axle subframe.
- ❑ Attach the steering rack to the body.

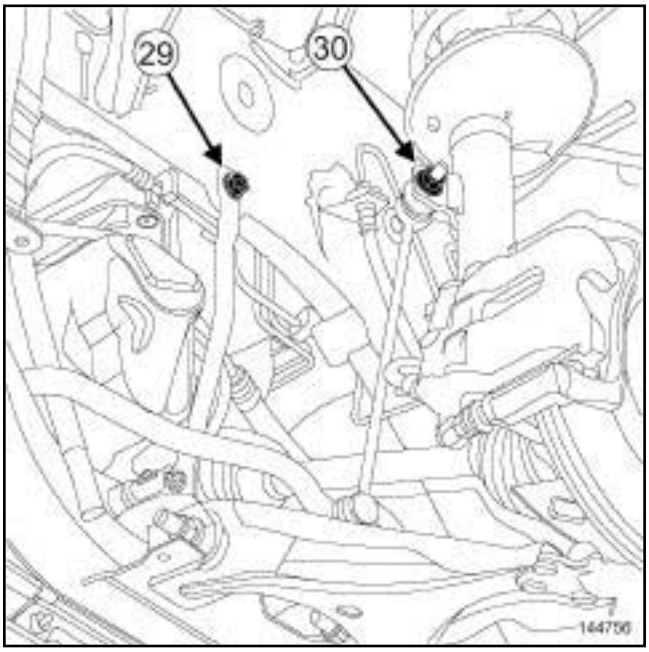

144756

- ❑ Remove:
  - the front axle subframe tie-rod upper bolts (**29**) ,
  - the anti-roll bar tie rod upper bolts (**30**) ,
  - the front right-hand wheel driveshaft (see **Front right-hand driveshaft: Removal - Refitting**) (29A, Driveshaft),
  - the front left-hand wheel driveshaft (see **Front left-hand driveshaft: Removal - Refitting**) (29A, Transmission).
- ❑ Pass the power-assisted steering low pressure pipe over the gearbox cover.

K4M

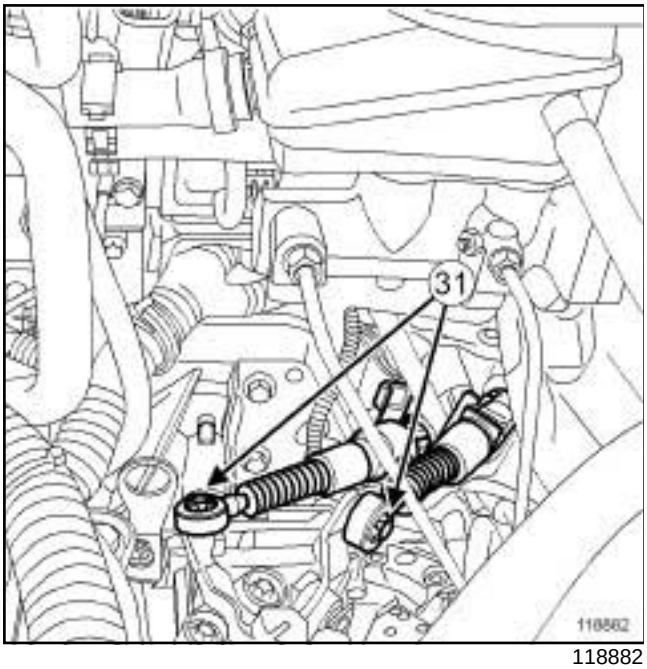

118882

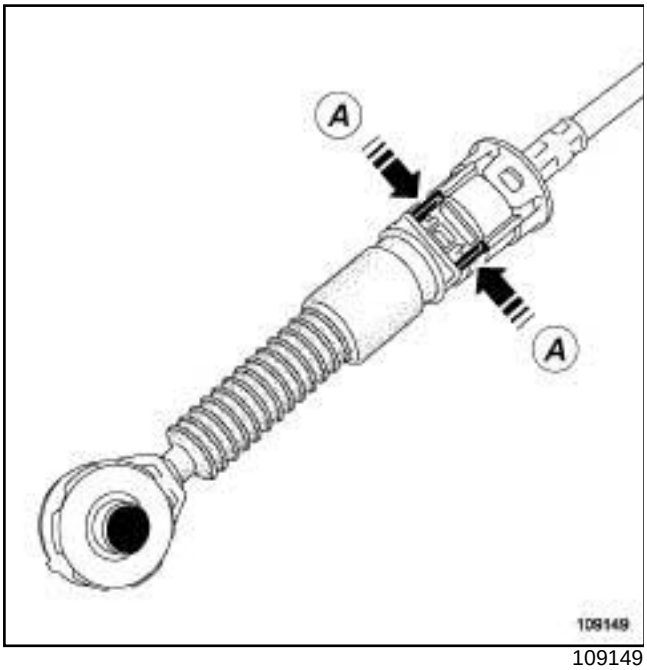

109149

❑ Unclip:

- the gear control cables on the gearbox at (**31**) using a screwdriver,
- the gear control cables from the sleeve stops by pressing at (**A**) .

❑ Move the gear control cables away from the gearbox.

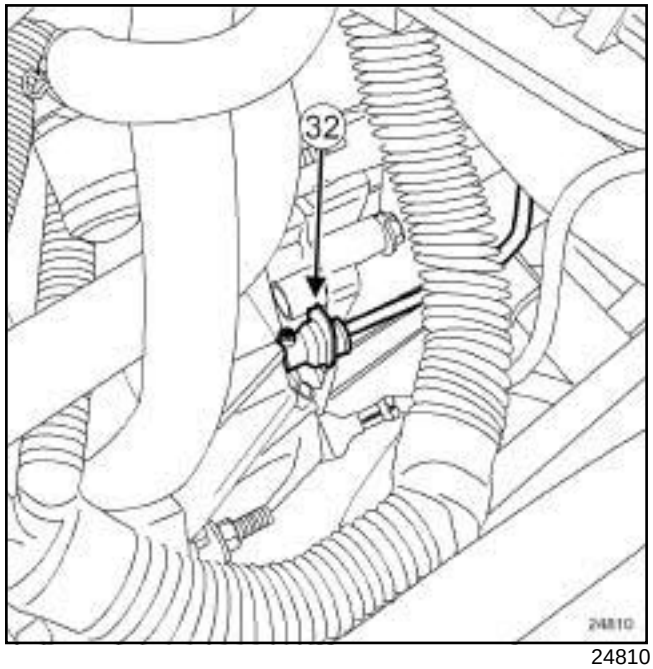

24810

❑

WARNING

Do not pull the clip. If it is incorrectly handled in any way, the pipe will need to be replaced.

❑ Disconnect the clutch control pipe on the clutch slave cylinder by pressing the clip (**32**) .

❑ Recover the brake fluid in a container.

❑ Fit blanking plugs on the pipe openings.

❑ Remove the lower engine tie-bar (see **19D**, **Engine mounting**, **Lower engine tie-bar: Removal - Refitting**, page **19D-8**) .

K4M

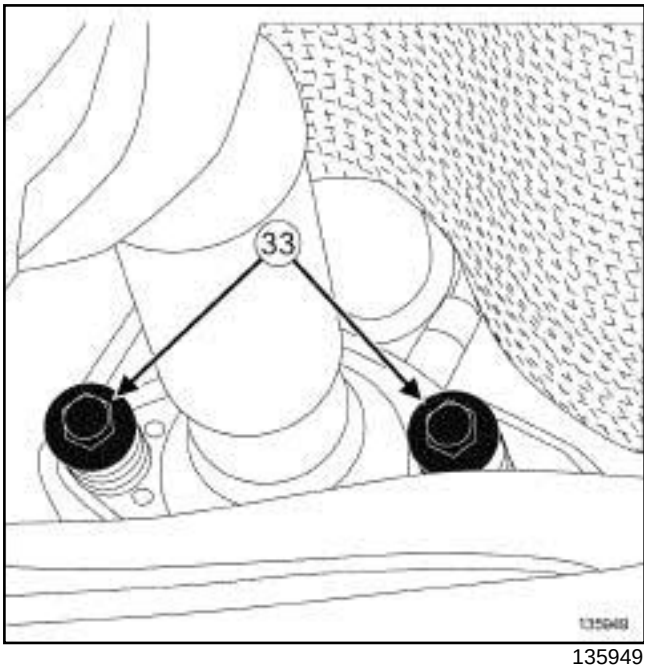

135949

❑ Remove:

- the bolts (**33**) from the exhaust flange,
- the exhaust bracket ring.

❑ Move aside the exhaust pipe.

> Note:
>
> Pull the exhaust pipe backwards.

❑ Remove the front axle subframe (see **Front axle subframe: Removal - Refitting**) (31A, Front axle components).

II - REMOVAL OPERATION

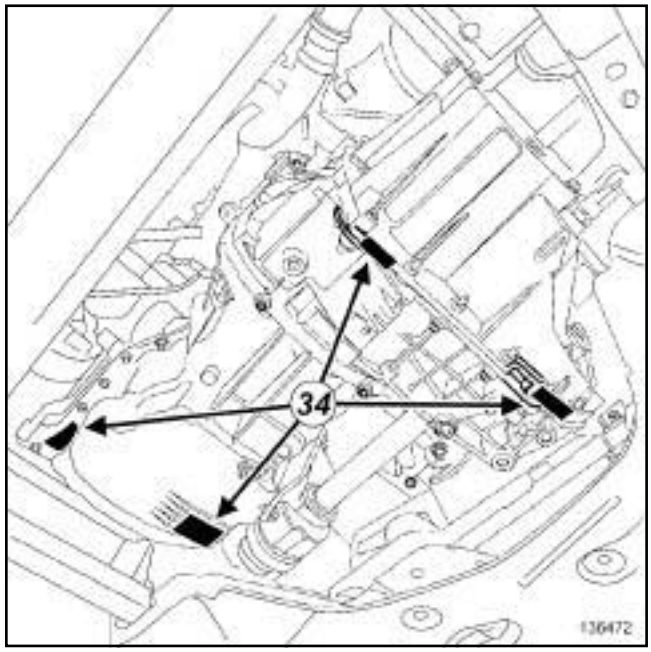

136472

❑ Mark the positions of the suspended engine mountings on the body.

❑ Support the engine - gearbox assembly on the engine marks (**34**) using the **(Mot. 1390)**.

❑ Remove the right-hand suspended engine mounting (see **19D**, **Engine mounting**, **Right-hand suspended engine mounting: Removal - Refitting**, page **19D-4**) .

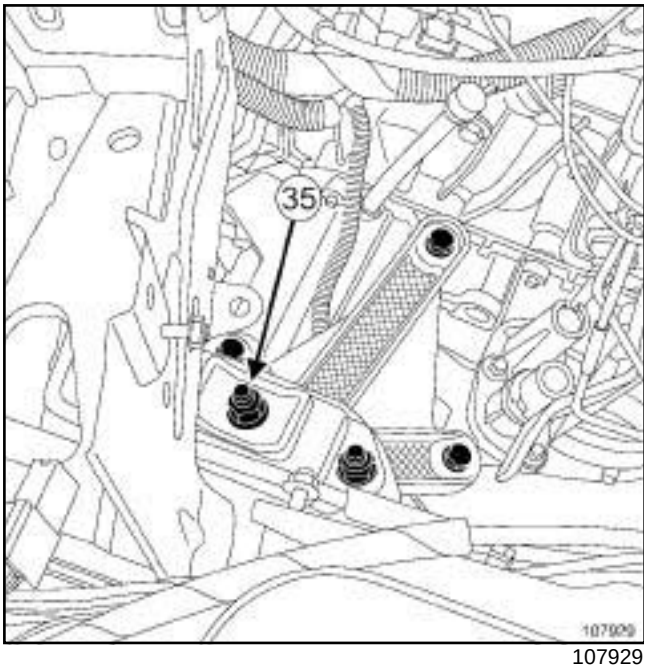

107929

- Remove the nut (**35**) on the rubber pad support of the left-hand suspended engine mounting.
- Strike the gearbox stud with a copper hammer to separate the engine - gearbox assembly from the body.

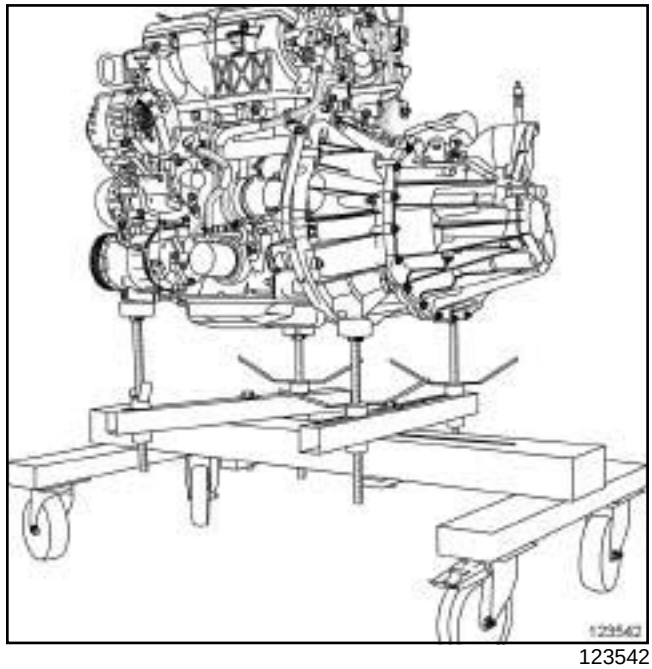
123542

- Lift the vehicle to remove the engine - gearbox assembly.

> Note:
>
> Ensure that no component obstructs the movement of the body around the engine - gearbox assembly.

- Remove the engine - gearbox assembly.

REFITTING

I - REFITTING PREPARATION OPERATION

- For standard engine replacements (see **Engine: Standard replacement**) (Technical Note 6006A, 10A, Engine and peripherals).
- **parts always to be replaced: ring between exhaust manifold and catalytic converter**

II - REFITTING OPERATION

- Fit the engine - gearbox assembly.
- Refit the nut on the rubber pad support of the left-hand suspended engine mounting.
- Torque tighten the **nut on the rubber pad support of the left-hand suspended engine mounting (62 N.m)**.
- Refit the right-hand suspended engine mounting (see **19D**, **Engine mounting**, **Right-hand suspended engine mounting: Removal - Refitting**, page **19D-4**) .

K4M

❏ Remove the **(Mot. 1390)** from the engine - gearbox assembly.

III - FINAL OPERATION

❏ Proceed in the reverse order to removal.

❏ Torque tighten:

- the **exhaust flange bolts (21 N.m)**,
- the **front axle subframe tie-rod upper bolts (21 N.m)**,
- the **anti-roll bar tie rod upper bolts (37 N.m)**,
- the **earth strap bolt on the gearbox (21 N.m)**,
- the **power-assisted steering low pressure pipe bolt on the front axle subframe (21 N.m)**,
- the **power-assisted steering pipe bolts on the gearbox support (21 N.m)**,
- the **power-assisted steering pipe bolts on the gearbox (21 N.m)**,
- the **power-assisted steering pipe bolt on the cylinder block (21 N.m)**.

❏ Perform the following operations:

- top up the engine oil (see **10A**, **Engine and cylinder block assembly**, **Engine oil: Draining - Refilling**, page **10A-32**) ,
- fill up the gearbox oil (see **Manual gearbox oils: Draining - Filling**) (21A, Manual gearbox),
- fill and bleed the cooling circuit (see **19A**, **Cooling**, **Cooling system: Draining - Refilling**, page **19A-6**) ,
- bleed the clutch circuit (see **Clutch circuit: Bleed**) (37A, Mechanical component controls).

AIR CONDITIONING

❏ Fill the refrigerant circuit using the tool **refrigerant charging station** (see **Refrigerant circuit: Draining - Filling**) (62A, Air conditioning).

❏ Fill up the power-assisted steering circuit.

❏ First, bleed the power-assisted steering circuit by turning the steering wheel fully from left to right with the engine off.

❏ Bleed the power-assisted steering circuit by turning the steering wheel fully from lock to lock with the engine running.

❏ Top up the oil in the power-assisted steering oil reservoir.

❏ Check that there are no leaks.

K9K, and 796

Special tooling required	
Mot. 1448	Remote operation pliers for hose clips.
Mot. 1390	Support for removal - refitting of engine - gearbox assembly

Equipment required
refrigerant charging station

Tightening torques ▽	
nut on the rubber pad support of the left-hand suspended engine mounting	**62 N.m**
exhaust flange bolts	**21 N.m**
front axle subframe tie-rod upper bolts	**21 N.m**
anti-roll bar tie rod upper bolts	**37 N.m**
earth strap bolt on the gearbox	**21 N.m**
power-assisted steering low pressure pipe bolt on the front axle sub-frame	**21 N.m**
power-assisted steering pipe bolts on the gear-box support	**21 N.m**
power-assisted steering pipe bolts on the gear-box	**21 N.m**
power-assisted steering pipe bolt on the cylinder block	**21 N.m**

IMPORTANT
Wear cut-resistant gloves during the operation.

REMOVAL

I - REMOVAL PREPARATION OPERATION

❑

IMPORTANT
To prevent the vehicle from falling, lash it to the vehicle lift using a strap.

❑ Position the vehicle on a two-post lift (see **Vehicle: Towing and lifting**) (02A, Lifting equipment).

AIR CONDITIONING

❑ Drain the refrigerant circuit using the tool **refrigerant charging station** (see **Refrigerant circuit: Draining - Filling**) (62A, Air conditioning).

❑ Remove:

- the engine cover,
- the air inlet sleeve,
- the air filter unit (see **12A**, **Fuel mixture**, **Air filter unit: Removal - Refitting**, page **12A-6**) ,
- the battery (see **Battery: Removal - Refitting**) (80A, Battery),
- the battery tray,
- the injection computer (see **17B**, **Petrol injection**, **Petrol injection computer: Removal - Refitting**, page **17B-7**) .

K9K, and 796

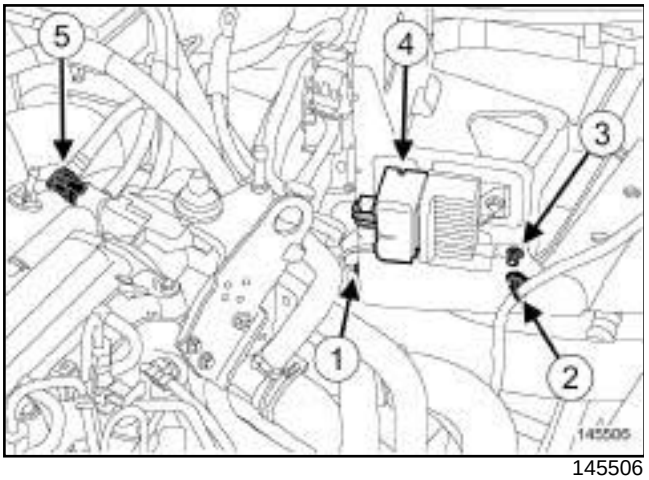

145506

- ❑ Remove the engine wiring bolt (**1**) on the battery mounting.
- ❑ Unclip the battery wiring at (**2**) .
- ❑ Remove the earth strap bolt (**3**) on the battery mounting.
- ❑ Disconnect the connector (**4**) from the pre-postheating unit.
- ❑ Disconnect the non-return valve (**5**) at the vacuum pump.

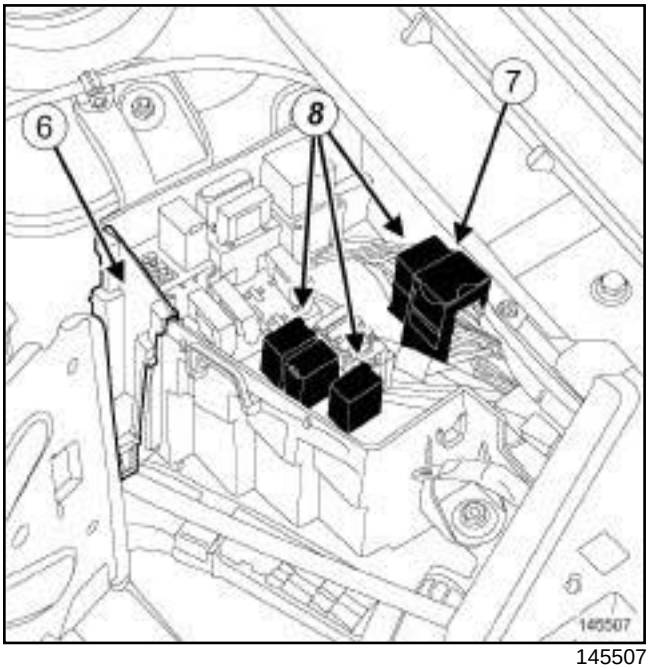

145507

- ❑ Remove the fuse and relay box cover.
- ❑ Remove the side protector (**6**) of the fuse and relay box.
- ❑ Disconnect the engine harness - front wiring connector (**7**) .
- ❑ Unclip the engine harness fuse holders and relays (**8**) from their mountings on the fuse and relay box in the engine compartment.
- ❑ Position the engine harness, fuses and relays on the engine.
- ❑ Remove:
  - the front wheels (see **Wheel: Removal - Refitting**) (35A, Wheels and tyres),
  - the engine undertray bolts,
  - the engine undertray,
  - the front bumper (see **Front bumper assembly: Exploded view**) and (see **Exterior body front trim assembly: Exploded view**) (55A, Exterior protection),
  - the front wheel arch liners (see **Exterior body front trim assembly: Exploded view**) (55A, Exterior protection).
- ❑ Drain:
  - the engine oil if necessary (see **10A**, **Engine and cylinder block assembly**, **Engine oil: Draining - Refilling**, page **10A-32**) ,
  - the gearbox oil (see **Manual gearbox oils: Draining - Filling**) (21A, Manual gearbox),

K9K, and 796

- the cooling system (see **19A**, **Cooling**, **Cooling system: Draining - Refilling**, page **19A-6**) .

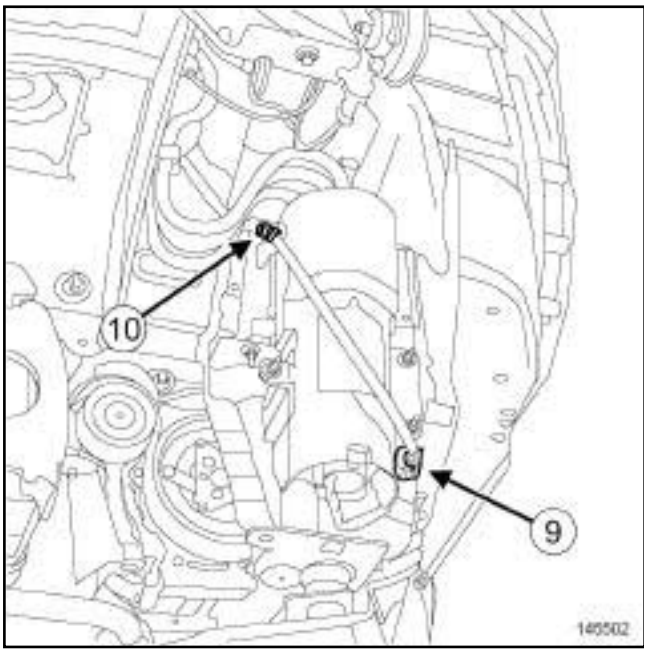

145502

❑ Disconnect the connector (**9**) from the water detection sensor on the diesel filter.

❑ Unclip the water detection connector on the diesel filter mounting at (**10**) .

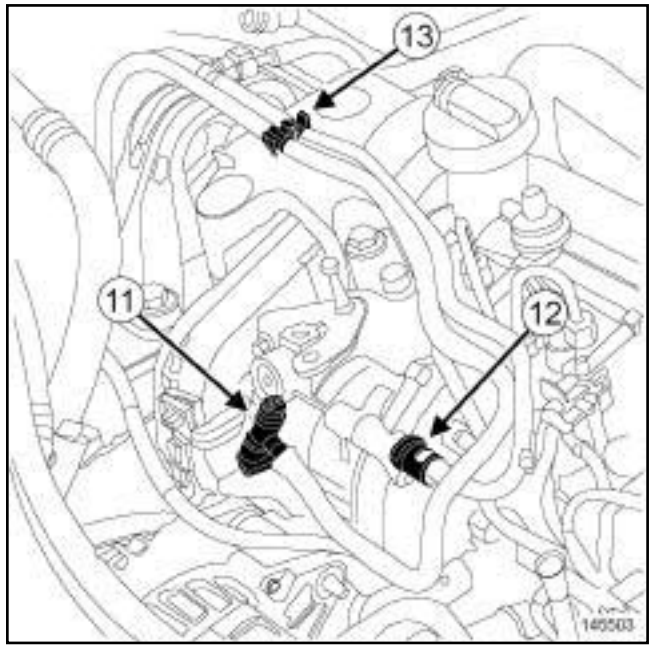

145503

❑ Disconnect:

- the fuel supply pipe (**11**) ,
- the fuel return pipe (**12**) .

WARNING

To avoid any corrosion or damage, protect the areas on which fuel is likely to run.

❑ Fit blanking plugs on the fuel supply pipe.

❑ Unclip the pipes at (**13**) .

❑ Disconnect the intercooler ducts (see **12B**, **Turbocharging**, **Intercooler: Removal - Refitting**, page **12B-8**) .

K9K, and 796

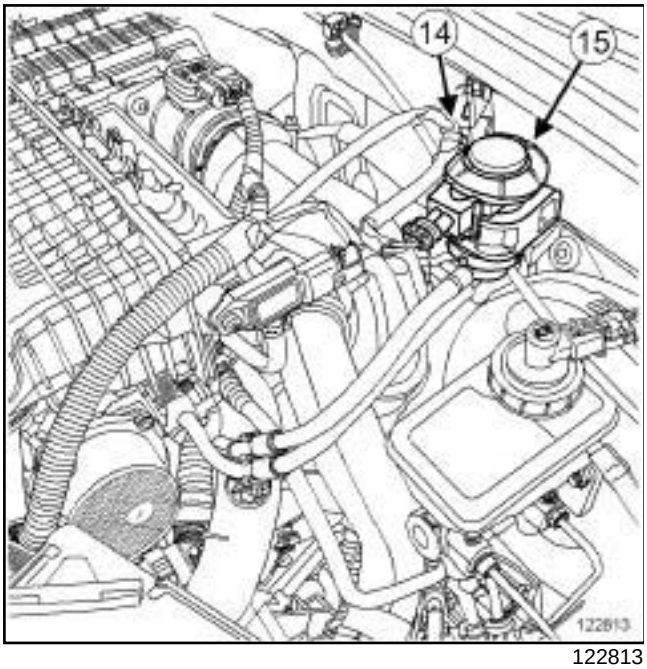

122813

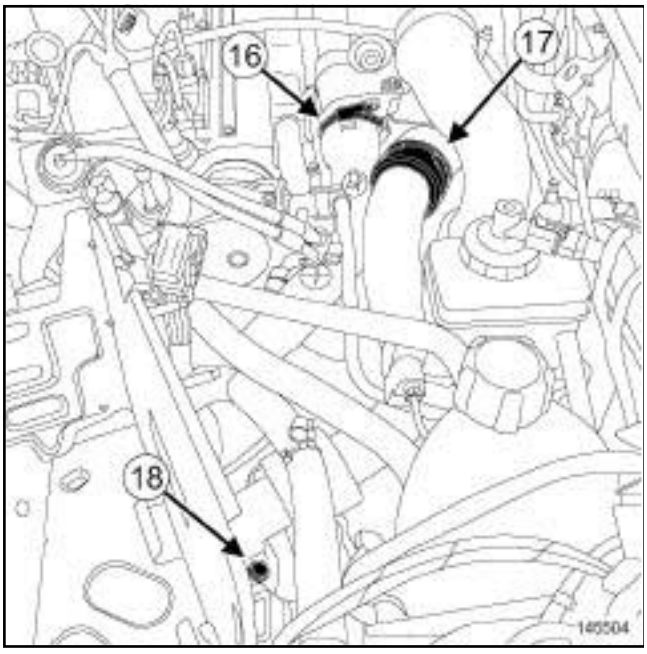

145504

❑ Unclip:

- the turbocharger control solenoid valve wiring at (**14**) ,
- the turbocharger control solenoid valve (**15**) from its support.

❑ Disconnect:

- the air duct (**16**) on the EGR assembly,
- the air duct between the turbocharger and the intercooler at (**17**) .

❑ Remove:

- the air duct nut (**18**) on the gearbox,
- the intercooler air ducts.

❑ Disconnect (see **Power-assisted steering pump: Removal - Refitting**) (36B, Power-assisted steering):

- the power-assisted steering low pressure hose on the power-assisted steering pump using the **(Mot. 1448)** and drain the circuit,
- the power-assisted steering high pressure pipe on the power-assisted steering pump,
- the connector from the power-assisted steering pressure switch.

STANDARD HEATING RECIRCULATION

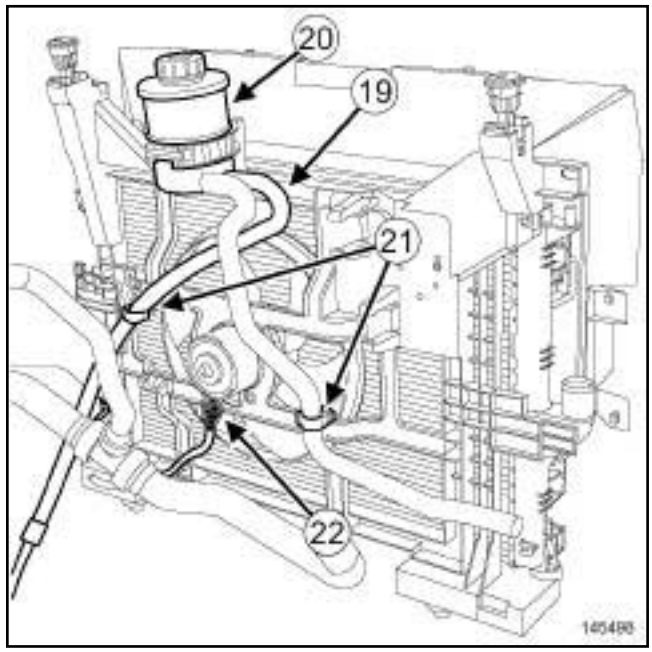

145498

❑ Remove:

- the power-assisted steering low pressure pipe (**19**) on the oil reservoir using the **(Mot. 1448)**,
- the power assisted steering oil reservoir (**20**) ,
- the bolt of the power-assisted steering high pressure pipe on the cylinder block.

❑ Unclip the power-assisted steering pipes on the fan assembly mounting at (**21**) .

❑ Disconnect the fan assembly connector (**22**) .

K9K, and 796

AIR CONDITIONING

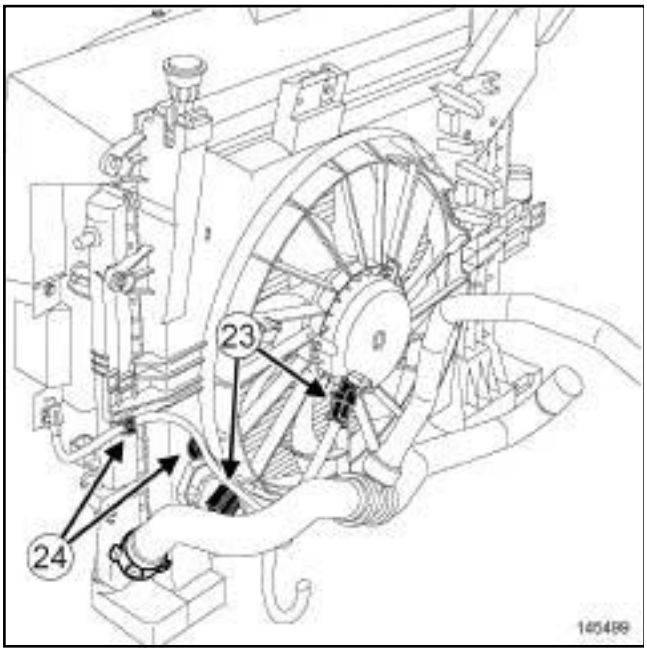

145499

- ❑ Remove the power-assisted steering high pressure pipe bolt on the cylinder block.
- ❑ Disconnect the connectors (**23**) from the fan assembly.
- ❑ Unclip the fan assembly wiring at (**24**) .

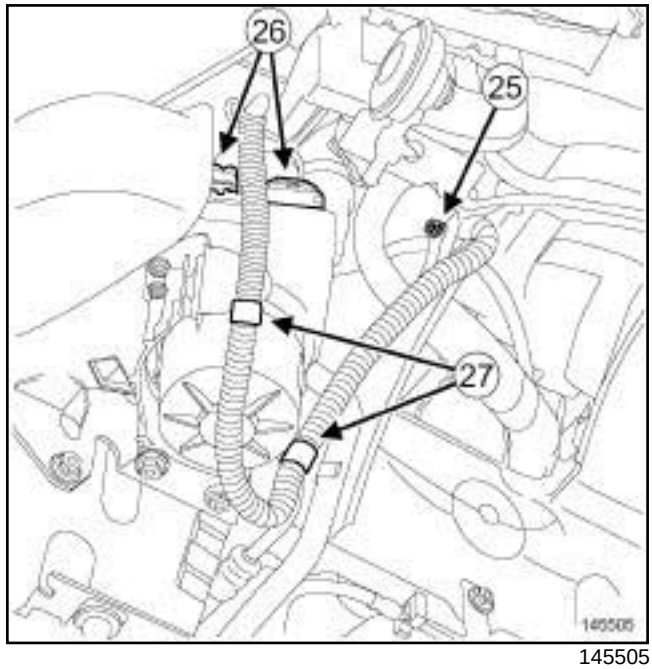

145505

- ❑ Remove the earth strap bolt (**25**) on the body.
- ❑ Disconnect the pump assembly connectors (**26**) .
- ❑ Unclip the pump assembly wiring at (**27**) .

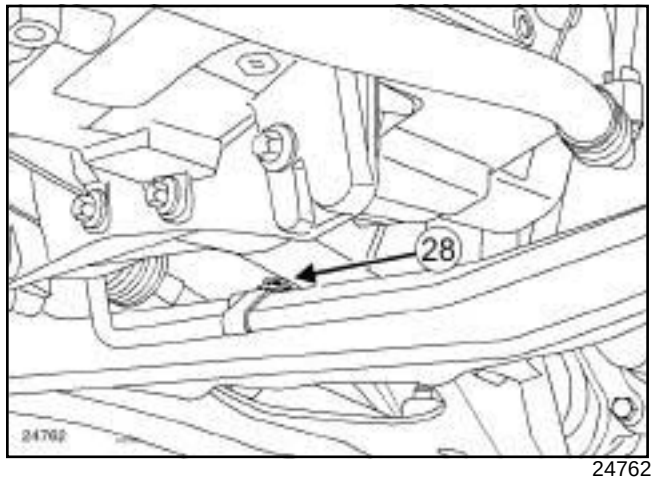

24762

- ❑ Remove the power-assisted steering low pressure pipe bolt (**28**) on the front axle subframe.

K9K, and 796

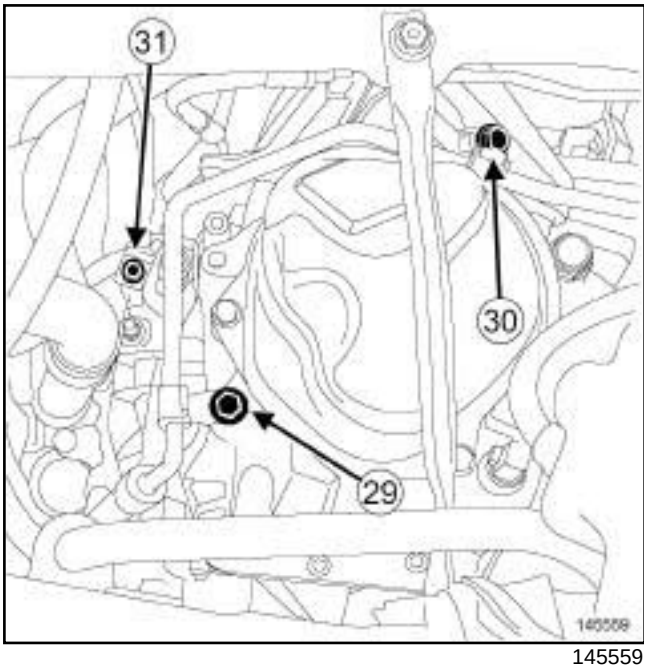

145559

❑ Remove:

- the power-assisted steering high pressure pipe bolt (**29**) on the gearbox,
- the power-assisted steering high pressure pipe bolt (**30**) on the gearbox support,
- the earth strap bolt (**31**) on the gearbox.

AIR CONDITIONING

❑ Remove the bolts from the pipe unions on the compressor.

❑ Disconnect the compressor pipes.

> Note:
>
> Plugs must be fitted on the hoses to prevent moisture from entering the system.

❑ Fit blanking plugs in the pipe openings.

❑ Disconnect the air conditioning pressostat connector.

❑ Remove the expansion bottle nuts.

❑ Move aside the expansion bottle.

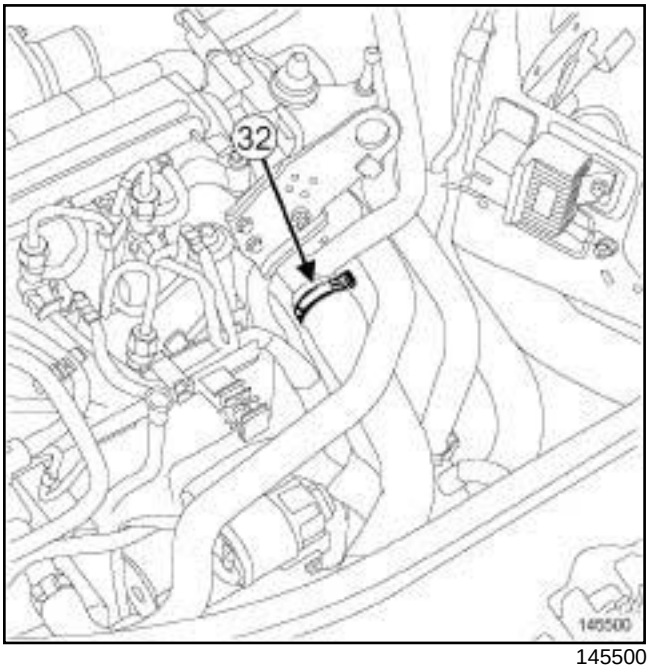

145500

❑ Move aside the cooling hose clip (**32**) on the water chamber using the **(Mot. 1448)**.

❑ Disconnect the cooling hose on the water chamber.

145501

❑ Move aside the cooling hose clips (**33**) on the heating radiator using the **(Mot. 1448)**.

❑ Disconnect the cooling hoses on the heating radiator.

❑ Remove the cooling hoses from their mountings.

❑ Remove (see) (36A, Steering assembly):

- the steering box heat shield bolts,

K9K, and 796

- the steering box heat shield,
- the steering box bolts on the front axle subframe.

❏ Attach the steering rack to the body.

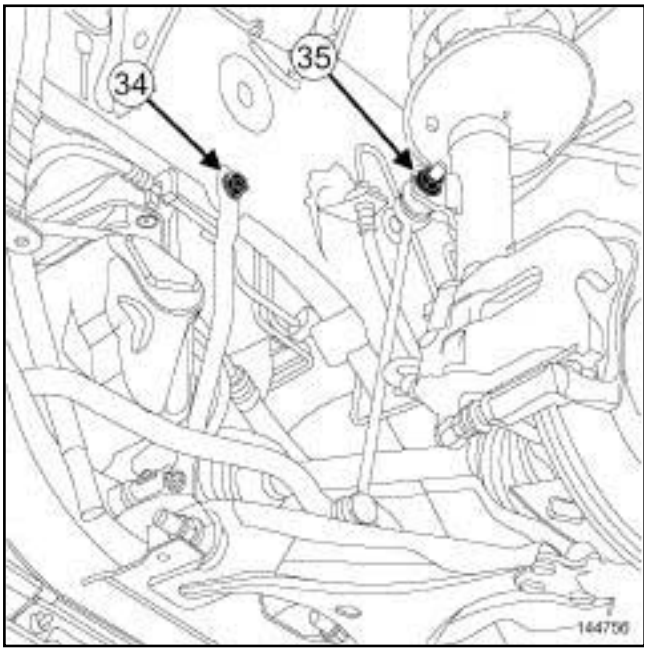

144756

❏ Remove:

- the front axle subframe tie-rod upper bolts (**34**) ,
- the anti-roll bar tie rod upper bolts (**35**) .

❏ Remove:

- the front right-hand wheel driveshaft (see **Front right-hand driveshaft: Removal - Refitting**) (29A, Driveshaft),
- the front left-hand wheel driveshaft (see **Front left-hand driveshaft: Removal - Refitting**) (29A, Transmission).

❏ Pass the power-assisted steering low pressure pipe over the gearbox cover.

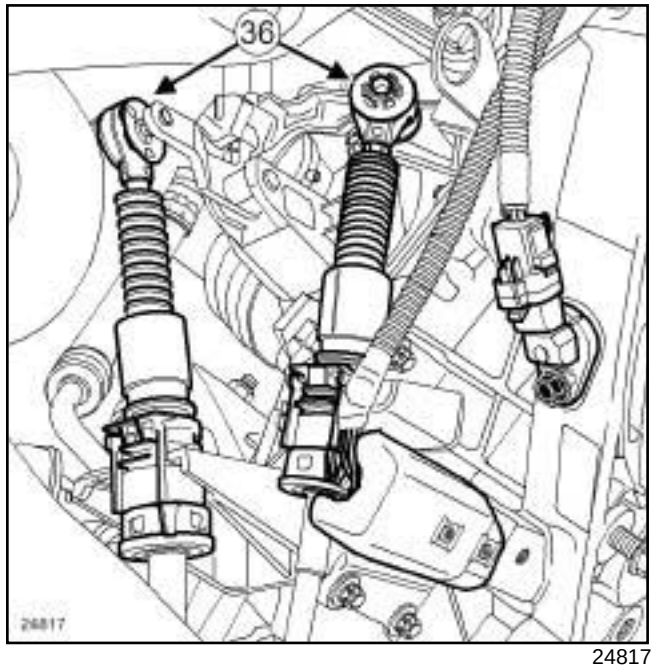

24817

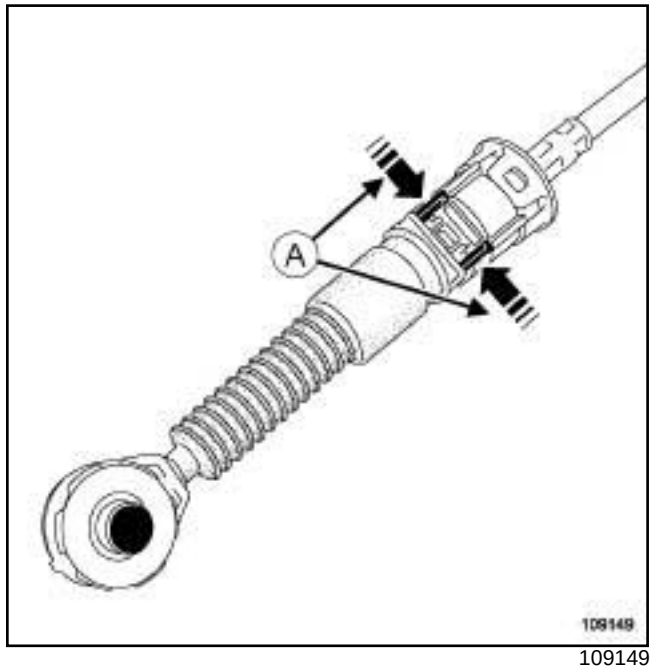

109149

❏ Unclip:

- the gear control cables on the gearbox at (**36**) using a screwdriver,
- the gear control cables from the sleeve stops by pressing at (**A**) .

❏ Move the gear control cables away from the gearbox.

K9K, and 796

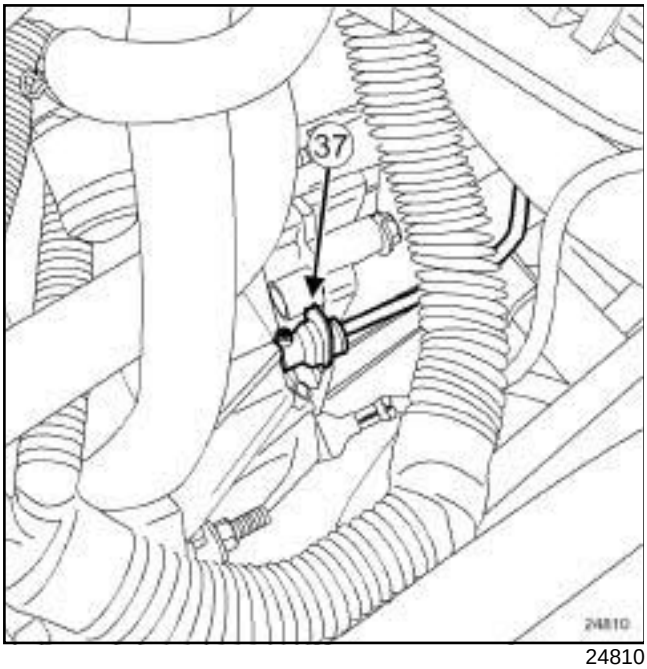

24810

❑

WARNING

Do not pull the clip. If it is incorrectly handled in any way, the pipe will need to be replaced.

❑ Disconnect the clutch control pipe on the clutch slave cylinder by pressing the clip (**37**) .

❑ Recover the brake fluid in a container.

❑ Fit blanking plugs in the pipe openings.

❑ Remove the lower engine tie-bar (see **19D**, **Engine mounting**, **Lower engine tie-bar: Removal - Refitting**, page **19D-8**) .

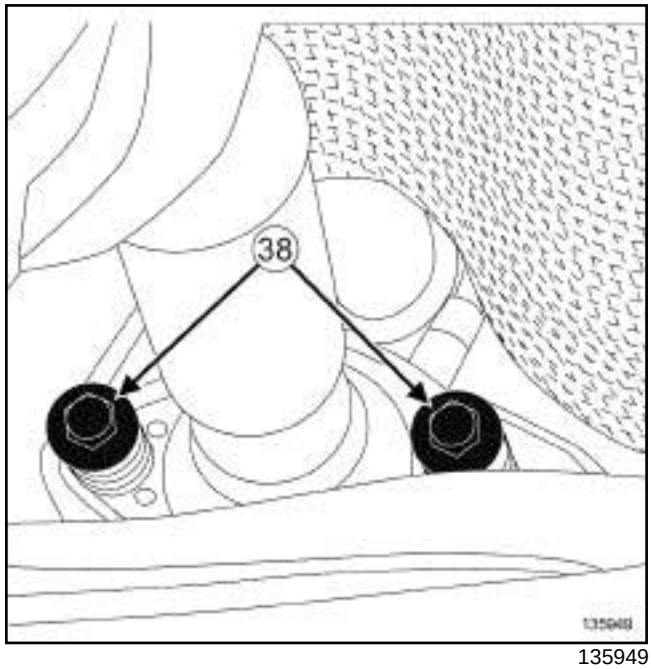

135949

❑ Remove:

- the bolts (**38**) from the exhaust flange,
- the exhaust bracket ring.

❑ Move aside the exhaust pipe.

Note:

Pull the exhaust pipe backwards.

❑ Remove the front axle subframe (see **Front axle subframe: Removal - Refitting**) (31A, Front axle components).

K9K, and 796

II - REMOVAL OPERATION

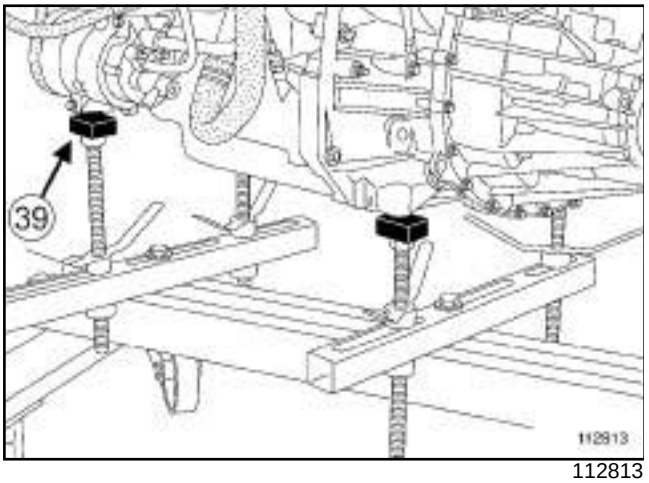

112813

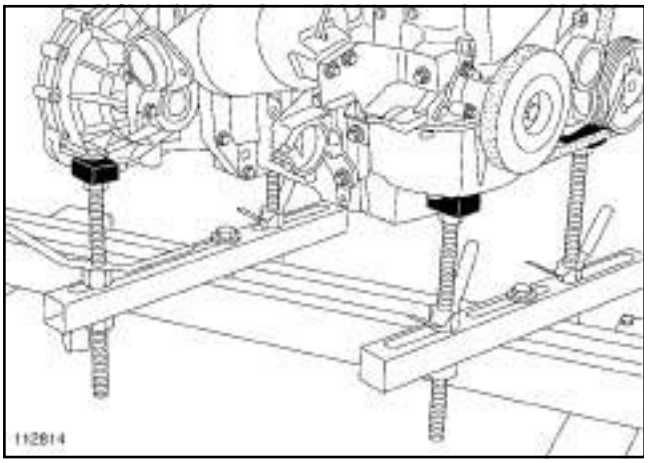

112814

❑

> Note:
>
> Ensure that the **(Mot. 1390)** is correctly positioned on the multifunction support at (**39**) .

❑ Position the **(Mot. 1390)** under the engine - gearbox assembly.

❑ Remove the right-hand suspended engine mounting (see **19D**, **Engine mounting**, **Right-hand suspended engine mounting: Removal - Refitting**, page **19D-4**) .

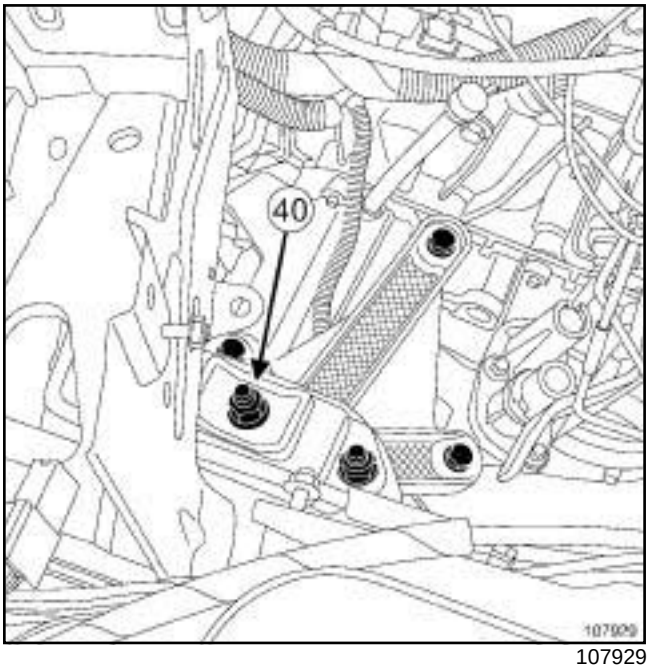

107929

❑ Remove the nut (**40**) on the rubber pad support of the left-hand suspended engine mounting.

❑ Strike the gearbox stud with a copper hammer to separate the engine - gearbox assembly from the body.

K9K, and 796

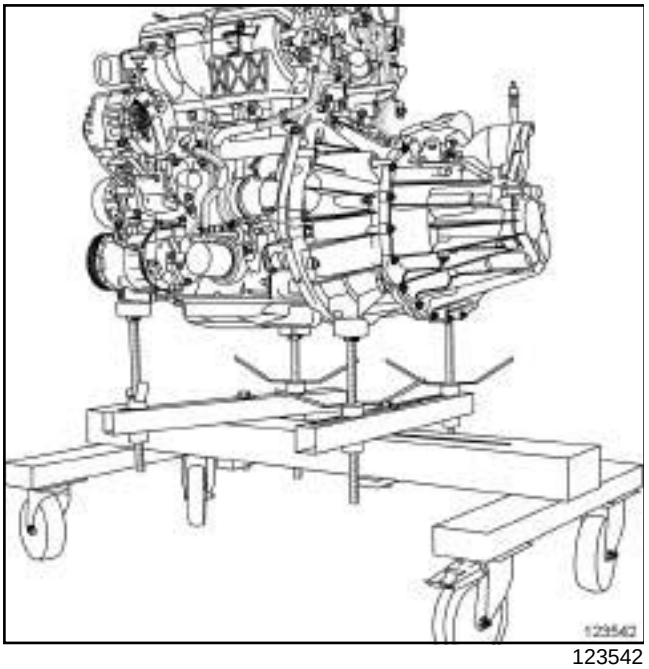

123542

❑ Lift the vehicle to remove the engine - gearbox assembly.

> Note:
>
> Ensure that no component obstructs the movement of the body around the engine - gearbox assembly.

❑ Remove the engine - gearbox assembly.

REFITTING

I - REFITTING PREPARATION OPERATION

❑ For standard engine replacements (see **Engine: Standard replacement**) (Technical Note 6006A, 10A, Engine and peripherals).

❑ **parts always to be replaced: ring between exhaust manifold and catalytic converter**

II - REFITTING OPERATION

❑ Fit the engine - gearbox assembly.

❑ Refit the nut on the rubber pad support of the left-hand suspended engine mounting.

❑ Torque tighten the **nut on the rubber pad support of the left-hand suspended engine mounting (62 N.m)**.

❑ Refit the right-hand suspended engine mounting (see **19D**, **Engine mounting**, **Right-hand suspended engine mounting: Removal - Refitting**, page **19D-4**) .

❑ Remove the **(Mot. 1390)** from the engine - gearbox assembly.

III - FINAL OPERATION

❑ Proceed in the reverse order to removal.

❑ Torque tighten:

- the **exhaust flange bolts (21 N.m)**,
- the **front axle subframe tie-rod upper bolts (21 N.m)**,
- the **anti-roll bar tie rod upper bolts (37 N.m)**,
- the **earth strap bolt on the gearbox (21 N.m)**,
- the **power-assisted steering low pressure pipe bolt on the front axle subframe (21 N.m)**,
- the **power-assisted steering pipe bolts on the gearbox support (21 N.m)**,
- the **power-assisted steering pipe bolts on the gearbox (21 N.m)**,
- the **power-assisted steering pipe bolt on the cylinder block (21 N.m)**.

❑ Perform the following operations:

- top up the engine oil (see **10A**, **Engine and cylinder block assembly**, **Engine oil: Draining - Refilling**, page **10A-32**) ,
- fill up the gearbox oil (see **Manual gearbox oils: Draining - Filling**) (21A, Manual gearbox),
- fill and bleed the cooling circuit (see **19A**, **Cooling**, **Cooling system: Draining - Refilling**, page **19A-6**) ,
- bleed the clutch circuit (see **Clutch circuit: Bleed**) (37A, Mechanical component controls).

AIR CONDITIONING

❑ Fill the refrigerant circuit using the tool **refrigerant charging station** (see **Refrigerant circuit: Draining - Filling**) (62A, Air conditioning).

❑ Fill up the power-assisted steering circuit.

❑ First, bleed the power-assisted steering circuit by turning the steering wheel fully from left to right with the engine off.

❑ Bleed the power-assisted steering circuit by turning the steering wheel fully from lock to lock with the engine running.

❑ Top up the oil in the power-assisted steering oil reservoir.

K9K, and 796

❑ Check that there are no leaks.

K4M

Tightening torques ▽	
flywheel bolts	**25 N.m + 50° ± 6°**

REMOVAL

I - REMOVAL PREPARATION OPERATION

❑ Remove:

- the gearbox (see **Manual gearbox: Removal - Refitting**) ,
- the clutch pressure plate (see **Pressure plate - Disc: Removal - Refitting**) .

II - REMOVAL OPERATION

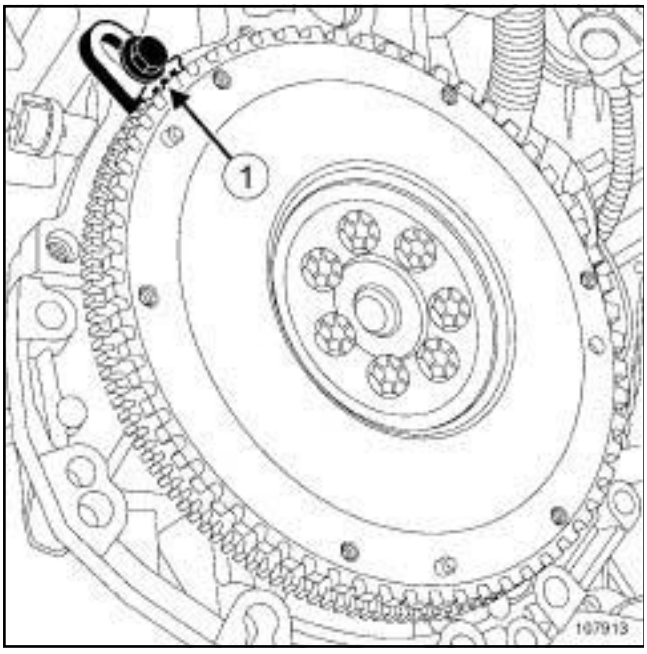

107913

❑ Lock the engine using the (**1**) .

❑ Remove:

- the flywheel bolts,
- the flywheel,
- the.

REFITTING

I - REFITTING PREPARATION OPERATION

❑ Check the condition of the flywheel.

❑ On the crankshaft, clean the flywheel bolt threading.

❑ Use **SURFACE CLEANER** (see **Vehicle: Parts and consumables for the repair**) (04B, Consumables - Products) to clean and degrease:

- the flywheel bearing face if reusing,
- the crankshaft bearing face.

❑ **parts always to be replaced: Flywheel bolts**.

❑ Coat the new flywheel bolts using **FRENETANCHE** (see **Vehicle: Parts and consumables for the repair**) (04B, Consumables - Products).

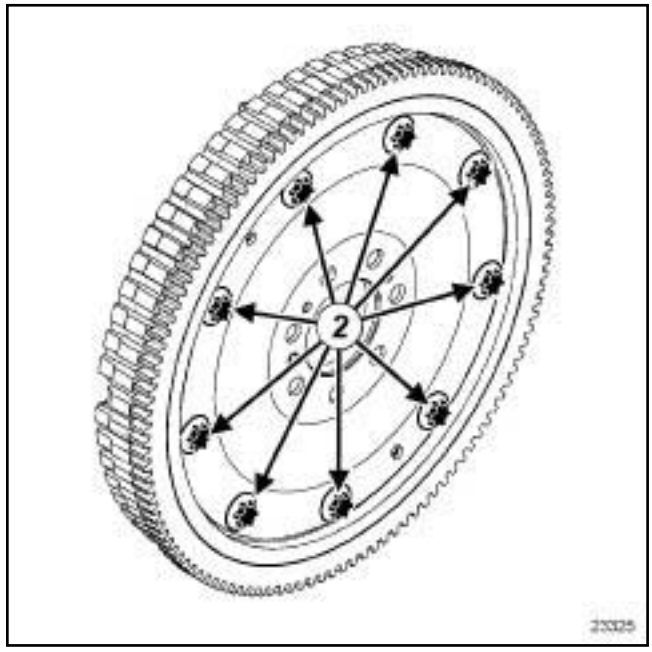

23325

❑

> **WARNING**
> Do not remove the bolts (**2**) from the flywheel drive plate.

II - REFITTING OPERATION

❑ Refit the flywheel.

K4M

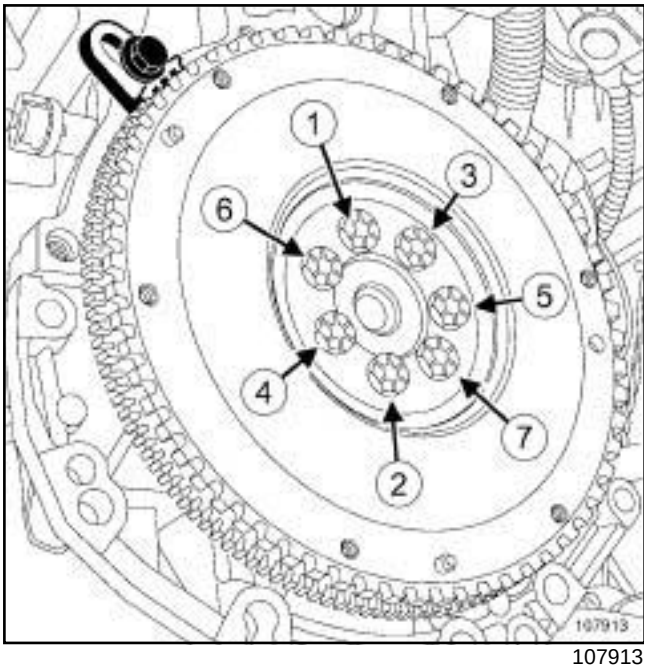

107913

- ❑ Screw in the new flywheel bolts without tightening them.
- ❑ Lock the engine using the.
- ❑ Torque tighten in order the **flywheel bolts (25 N.m + 50° ± 6°)**.
- ❑ Remove the tool.

III - FINAL OPERATION

- ❑ Refit:
  - the clutch pressure plate (see **Pressure plate - Disc: Removal - Refitting**) ,
  - the gearbox (see **Manual gearbox: Removal - Refitting**) .

K9K

Tightening torques ▽	
flywheel bolts	**55 N.m**

REMOVAL

I - REMOVAL PREPARATION OPERATION

❑ Remove:

- the manual gearbox (see **Manual gearbox: Removal - Refitting**) ,
- the clutch pressure plate (see **Pressure plate - Disc: Removal - Refitting**) .

II - OPERATION FOR REMOVAL OF PART CONCERNED

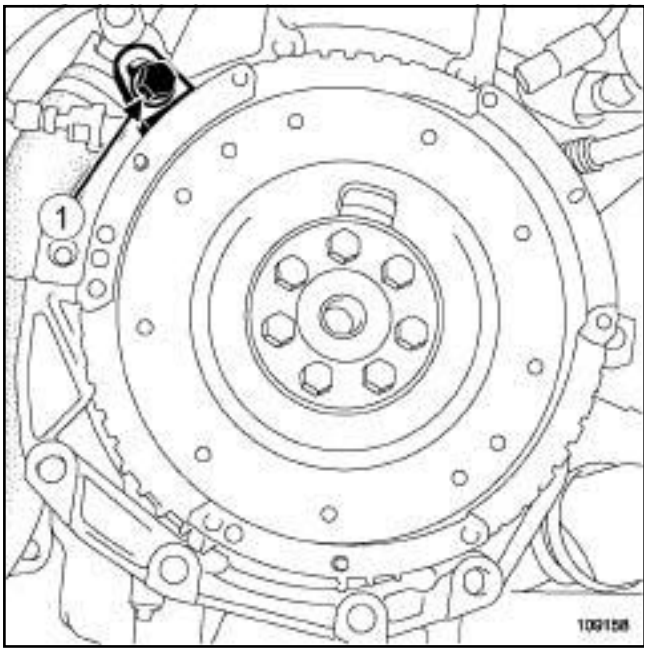

109158

❑ Lock the flywheel with the(**1**).

❑ Remove the flywheel bolts.

❑ Remove:

- the flywheel,
- the.

REFITTING

I - REFITTING PREPARATION OPERATION

❑ Check the condition of the flywheel.

❑ **parts always to be replaced: Flywheel bolts**.

❑ Use **SURFACE CLEANER** (see **Vehicle: Parts and consumables for the repair**) (04B, Consumables - Products) to clean and degrease:

- the crankshaft bearing face on the flywheel if reused,
- the flywheel pressure face on the crankshaft,
- the flywheel threading.

II - REFITTING OPERATION FOR PART CONCERNED

❑ Refit the flywheel.

❑ Coat the new flywheel bolts with **FRENETANCH** (see **Vehicle: Parts and consumables for the repair**) (04B, Consumables - Products).

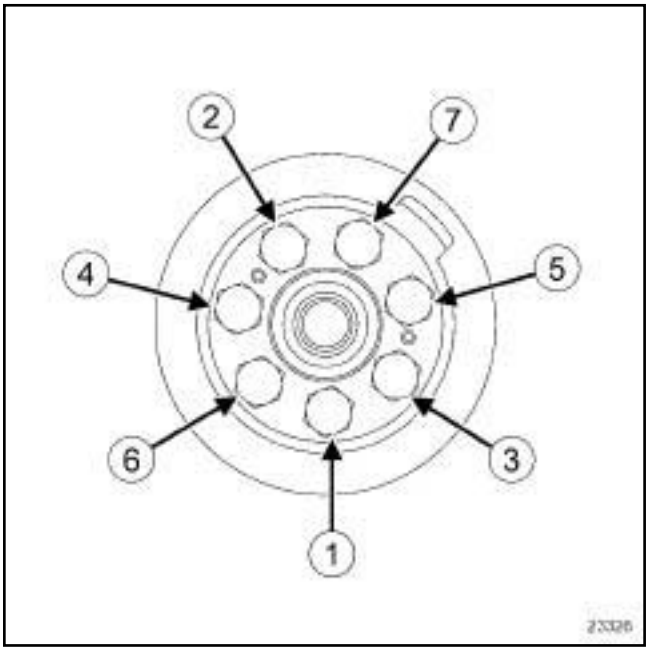

23326

❑ Lock the flywheel using tool.

❑ Tighten to torque and in order the **flywheel bolts (55 N.m)**.

III - FINAL OPERATION

❑ Refit:

- the clutch pressure plate (see **Pressure plate - Disc: Removal - Refitting**) ,
- the manual gearbox (see **Manual gearbox: Removal - Refitting**) .

K4M

Equipment required
petrol compression gauge
Diagnostic tool

CHECK

I - PREPARATION OPERATION FOR CHECK

❑ Remove:

- the coils (see **17A**, **Ignition**, **Coils: Removal - Refitting**, page **17A-1**) ,
- the spark plugs (see **Plugs: Removal - Refitting**) .

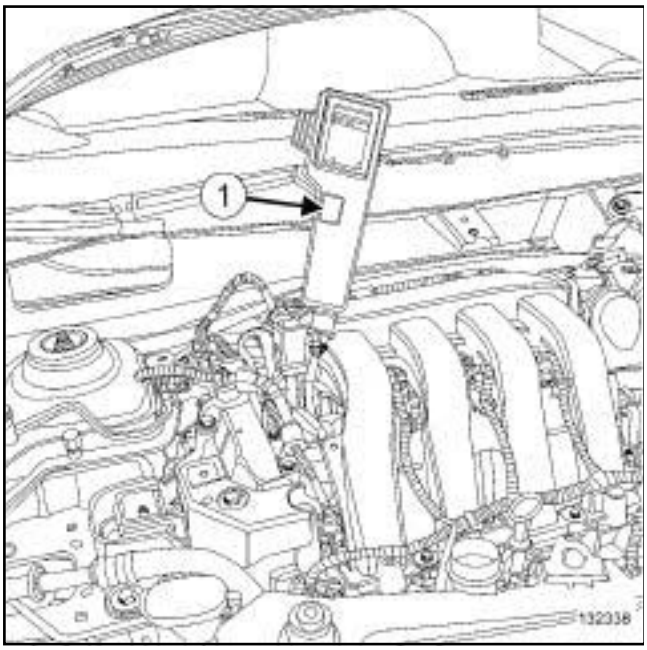

132338

❑ Connect a **petrol compression gauge** (**1**) .

❑ Put the vehicle under starting conditions:

- gear lever in neutral position for manual gearbox,
- gear lever in position P (park) for an automatic gearbox.

❑ Disconnect the injector connectors.

II - TEST OPERATION

❑ Activate the starter until the needle of the petrol compression gauge stabilises.

❑ Measure the compression of the engine, cylinder by cylinder.

❑ Fully depress the accelerator pedal in order to open the throttle valve during the compression measurements.

> Note:
>
> It is necessary to wait for at least **10 seconds** before starting the engine each time (the starter will not run due to its thermal protection).

III - FINAL OPERATION

❑ Disconnect the **petrol compression gauge**.

❑ Refit:

- the spark plugs (see **Plugs: Removal - Refitting**) ,
- the coils (see **17A**, **Ignition**, **Coils: Removal - Refitting**, page **17A-1**) .

❑ Connect the injector connectors.

❑ Using the **Diagnostic tool**, check that there are no faults stored in the computer.

❑ Start the vehicle.

K9K, and STANDARD HEATING RECIRCULATION

Equipment required
offset spanner

Tightening torques ▽	
new accessories belt tensioning roller bolt	**40 N.m**

WARNING

Do not run the engine without the accessories belt to avoid damaging the crankshaft accessories pulley.

WARNING

In order to avoid any refrigerant leaks, do not damage (deform, twist, etc.) the pipe.

REMOVAL

I - REMOVAL PREPARATION OPERATION

❑ Position the vehicle on a two-post lift (see **Vehicle: Towing and lifting**) (02A, Lifting equipment).

❑ Remove:

- the front right-hand wheel (see **Wheel: Removal - Refitting**) (35A, Wheels and tyres),
- the front wheel arch side liner,
- the front right-hand wheel arch liner partially (see **Front wheel arch liner: Removal - Refitting**) (55A, Exterior protection),
- the plastic shield underneath the diesel filter.

II - OPERATION FOR REMOVAL OF PART CONCERNED

Auto tensioner

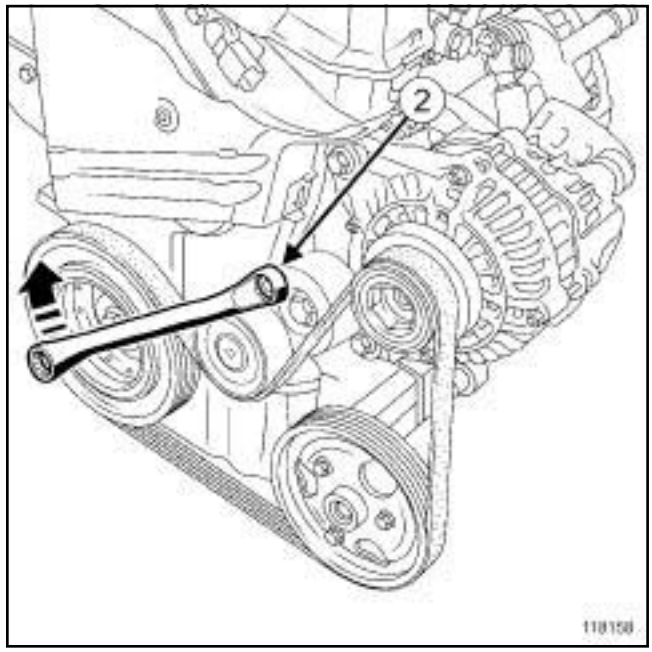

118158

❑ Turn the accessories belt tensioning roller clockwise at (**2**) using a **16 mm offset spanner**.

❑ Remove the accessories belt.

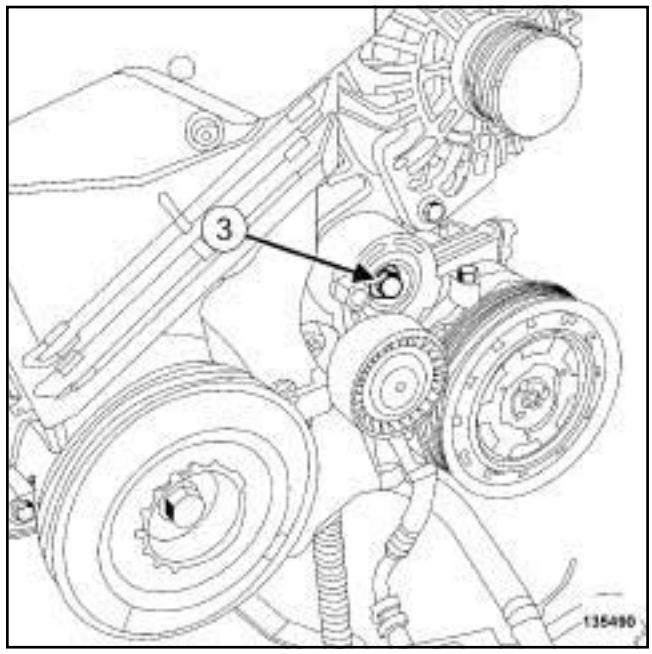

135490

❑ Remove:

- the accessories belt tensioning roller bolt (**3**) ,
- the accessories belt tension wheel.

K9K, and STANDARD HEATING RECIRCULATION

REFITTING

I - REFITTING PREPARATION OPERATION

❑

> **WARNING**
> Only use brushes with plastic or non-corrosive metal (brass) bristles.

❑ Use a brush to remove any deposits from the crankshaft accessories pulley V-grooves.

❑ **parts always to be replaced: Accessories belt**

❑ **parts always to be replaced: Accessories belt tensioning roller**

❑ **parts always to be replaced: Accessories tensioning roller bolt**

II - REFITTING OPERATION FOR PART CONCERNED

❑ Refit a new accessories belt tensioning roller.

Auto tensioner

❑ Torque tighten the **new accessories belt tensioning roller bolt (40 N.m)**.

❑ Refit a new accessories belt.

❑ Rotate the crankshaft clockwise through two revolutions (timing end).

III - FINAL OPERATION

❑ Refit:

- the front right-hand wheel arch liner (see **Front wheel arch liner: Removal - Refitting**) (55A, Exterior protection),
- the front wheel arch side liner,
- the plastic shield underneath the diesel filter,
- the front right-hand wheel (see **Wheel: Removal - Refitting**) (35A, Wheels and tyres).

Tightening torques ▽	
tensioning roller bolt	**40 N.m**

WARNING
Do not run the engine without the accessories belt to avoid damaging the crankshaft accessories pulley.

WARNING
In order to avoid any refrigerant leaks, do not damage (deform, twist, etc.) the pipe.

REMOVAL

I - REMOVAL PREPARATION OPERATION

❑ Position the vehicle on a two-post lift (see **Vehicle: Towing and lifting**) (02A, Lifting equipment).

❑ Remove:

- the front right-hand wheel (see **Wheel: Removal - Refitting**) (35A, Wheels and tyres),
- the front right-hand wheel arch side liner,
- the front right-hand wheel arch liner partially (see **Front wheel arch liner: Removal - Refitting**) (55A, Exterior protection),
- the plastic shield underneath the diesel filter.

II - REMOVAL OPERATION

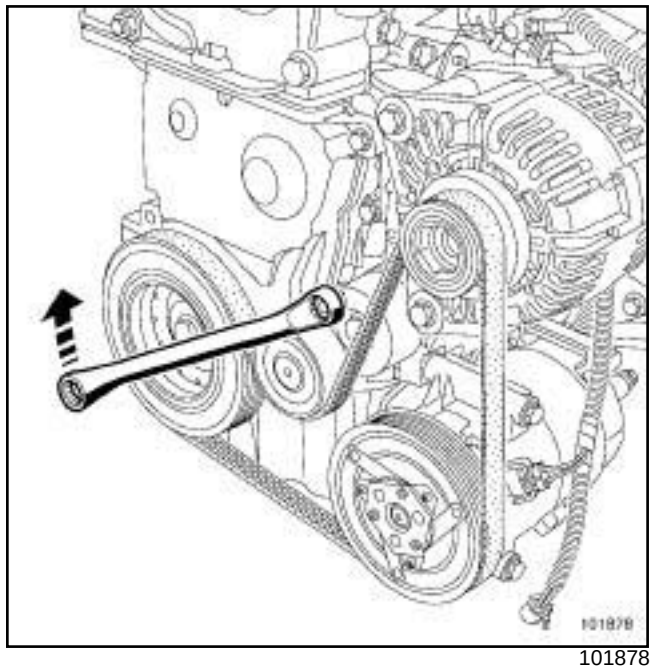

101878

❑ Rotate the accessories belt auto tensioner clockwise using a **16 mm** offset wrench.

❑ Remove:

- the accessories belt,
- the accessories belt tension wheel.

REFITTING

I - REPAIR PREPARATION OPERATION

❑ **parts always to be replaced: Accessories belt**.

❑ **parts always to be replaced: Accessories belt tensioning roller**

❑ **parts always to be replaced: Accessories tensioning roller bolt**

WARNING
Only use brushes with plastic or non-corrosive metal (brass) bristles.

❑ To remove all deposits, use a brush to clean the grooves of:

- the crankshaft pulley,
- the air conditioning compressor pulley,
- the alternator pulley,

❑ Refit a new tensioning roller fitted with a new bolt.

❑ Tighten to torque the **tensioning roller bolt (40 N.m)**.

II - REFITTING OPERATION FOR PART CONCERNED

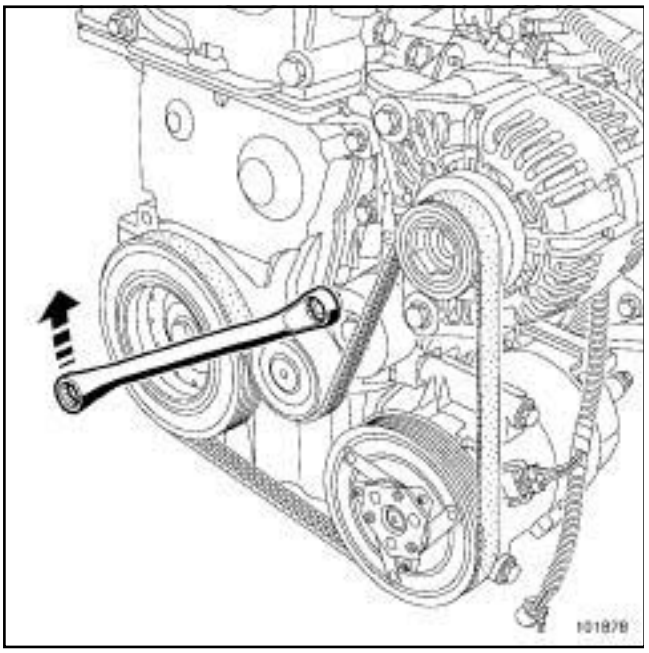

101878

- ❑ Rotate the tensioning roller clockwise using a **16 mm** offset wrench.
- ❑ Refit a new accessories belt.
- ❑ Turn the crankshaft two revolutions clockwise (timing end) to position the accessories belt correctly.

III - FINAL OPERATION

- ❑ Refit:
  - the front right-hand wheel arch liner (see **Front wheel arch liner: Removal - Refitting**) (55A, Exterior protection),
  - the front right-hand wheel arch side liner,
  - the plastic shield underneath the diesel filter,
  - the front right-hand wheel (see **Wheel: Removal - Refitting**) (35A, Wheels and tyres).

K4M, and POWER ASSISTED STEERING, and AIR CONDITIONING

Tightening torques ▽	
the automatic tensioning roller mounting bolts	**21 N.m**
the fixed roller mounting bolt	**21 N.m**

❑

IMPORTANT
Wear cut-resistant gloves during the operation.

WARNING
Do not run the engine without the accessories belt to avoid damaging the crankshaft accessories pulley.

REMOVAL

I - REMOVAL PREPARATION OPERATION

❑ Position the vehicle on a two-post lift (see **Vehicle: Towing and lifting**) (02A, Lifting equipment).

❑ Remove the front right-hand wheel (see **Wheel: Removal - Refitting**) (35A, Wheels and tyres).

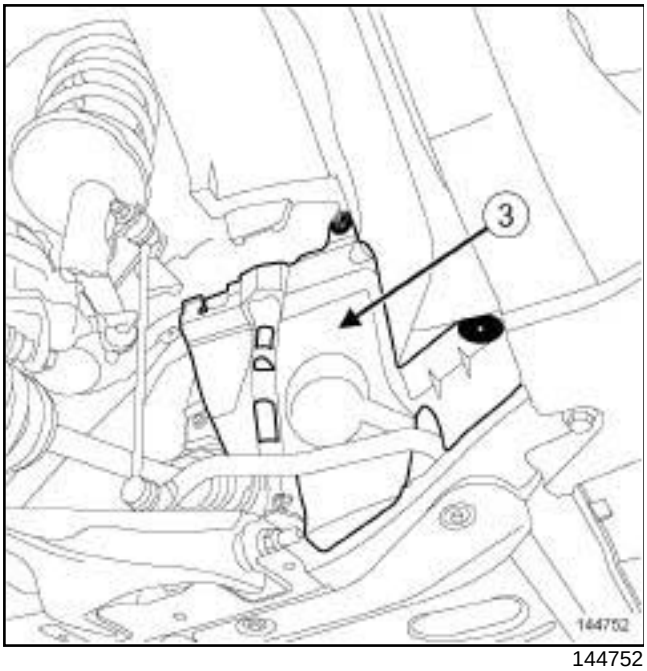

144752

❑ Remove the front right-hand wheel arch side liner (**3**) .

II - REMOVAL OPERATION

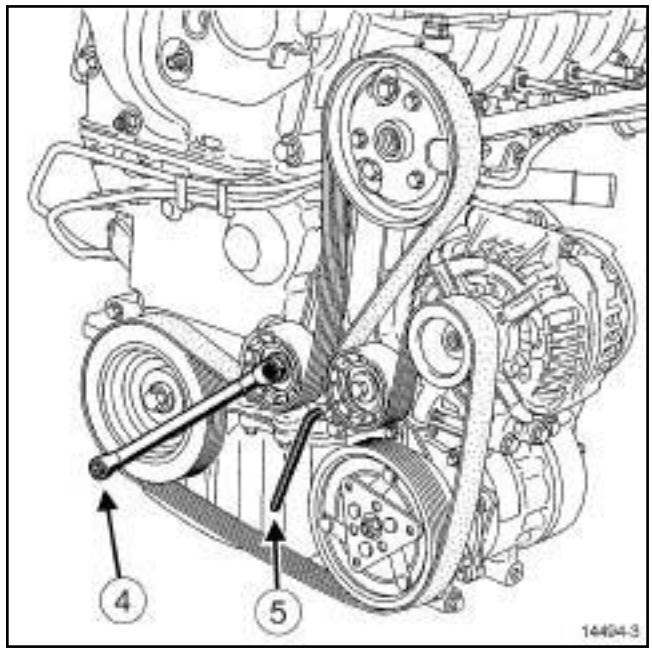

14494-3

❑ Turn the accessories belt auto tensioner anti-clockwise using a spanner (**4**) (**16 mm**), to relax the belt.

❑ Lock the auto tensioner using a **6 mm** Allen key (**5**) .

❑ Remove:

- the accessories belt,
- the auto tensioner bolts,
- the auto tensioner,
- the fixed roller bolt,
- the fixed roller.

REFITTING

I - REFITTING PREPARATION OPERATION

❑ **parts always to be replaced: Accessories belt**

parts always to be replaced: Accessories belt tensioning roller

parts always to be replaced: Accessories fixed roller

❑ Use a brush to remove any deposits from the crankshaft pulley V-grooves.

II - REFITTING OPERATION

❑ Refit:

- a new fixed roller,
- a new automatic tensioner.

K4M, and POWER ASSISTED STEERING, and AIR CONDITIONING

- Torque tighten:
  - **the automatic tensioning roller mounting bolts (21 N.m)**,
  - **the fixed roller mounting bolt (21 N.m)**.
- Turn the accessories belt auto tensioner clockwise using a **16 mm** spanner.
- Lock the auto tensioner using a **6 mm** Allen key.
- Refit a new accessories belt.
- Unlock the auto tensioner.
- Turn the crankshaft two revolutions clockwise to position the accessories belt correctly.

III - FINAL OPERATION

- Proceed in the reverse order to removal.

K4M, and STANDARD HEATING RECIRCULATION

Tightening torques ▽	
auto tensioner bolts	**40 N.m**

IMPORTANT
Wear cut-resistant gloves during the operation.

WARNING
Do not run the engine without the accessories belt to avoid damaging the crankshaft accessories pulley.

REMOVAL

I - REMOVAL PREPARATION OPERATION

❑ Position the vehicle on a two-post lift (see **Vehicle: Towing and lifting**) (02A, Lifting equipment).

❑ Remove the front right-hand wheel (see **Wheel: Removal - Refitting**) (35A, Wheels and tyres).

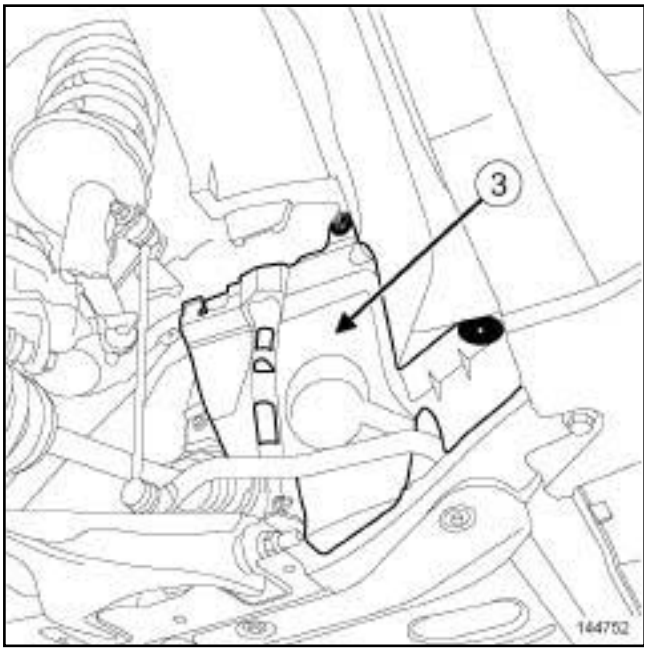

144752

❑ Remove the front right-hand wheel arch side liner (**3**) .

II - REMOVAL OPERATION

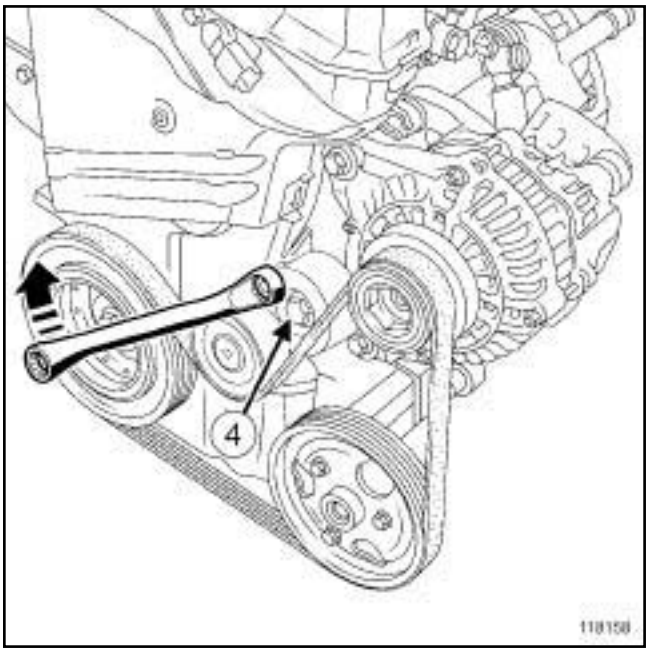

118158

❑ Pivot the accessories belt auto tensioner clockwise.

❑ Remove:

- the accessories belt,
- the tensioning roller bolt (**4**) ,
- the tensioning roller.

REFITTING

I - REFITTING PREPARATION OPERATION

❑ **parts always to be replaced: Accessories belt**

parts always to be replaced: Accessories belt tensioning roller

❑ Use a brush to remove any deposits from the crankshaft pulley V-grooves.

II - REFITTING OPERATION

❑ Refit a new tensioning roller.

❑ Torque tighten the **auto tensioner bolts (40 N.m)**.

❑ Pivot the accessories belt auto tensioner clockwise.

❑ Refit a new accessories belt.

❑ Turn the crankshaft two revolutions clockwise to position the accessories belt correctly.

III - FINAL OPERATION

❑ Refit the front right-hand wheel arch side liner.

K4M, and STANDARD HEATING RECIRCULATION

- Refit the front right-hand wheel (see **Wheel: Removal - Refitting**) (35A, Wheels and tyres).

K9K

Special tooling required	
Mot. 1489	TDC locating pin.

Tightening torques ▽	
accessories pulley bolt	**120 N.m + 95° ±15°**
TDC pin plug	**25 N.m**

IMPORTANT
Wear cut-resistant gloves during the operation.

WARNING
Do not run the engine without the accessories belt to avoid damaging the crankshaft accessories pulley.

REMOVAL

I - REMOVAL PREPARATION OPERATION

❑ Position the vehicle on a two-post lift (see **Vehicle: Towing and lifting**) (02A, Lifting equipment).

❑ Remove:

- the front right-hand wheel (see **Wheel: Removal - Refitting**) (35A, Wheels and tyres),
- the front right-hand wheel arch side liner,
- the front right-hand wheel arch partially (see **Front wheel arch liner: Removal - Refitting**) (55A, Exterior protection),
- the plastic shield underneath the diesel filter,
- the accessories belt (see **11A**, **Top and front of engine**, **Accessories belt: Removal - Refitting**, page **11A-2**) .

II - REMOVAL OPERATION

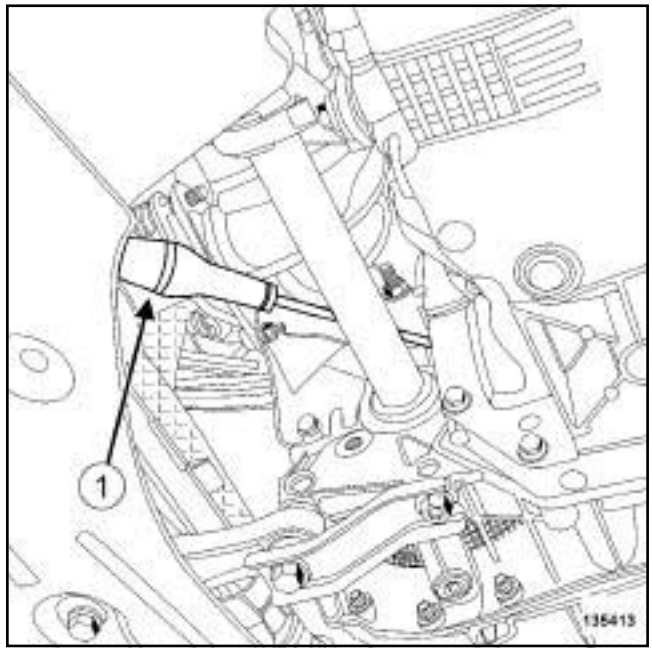

135413

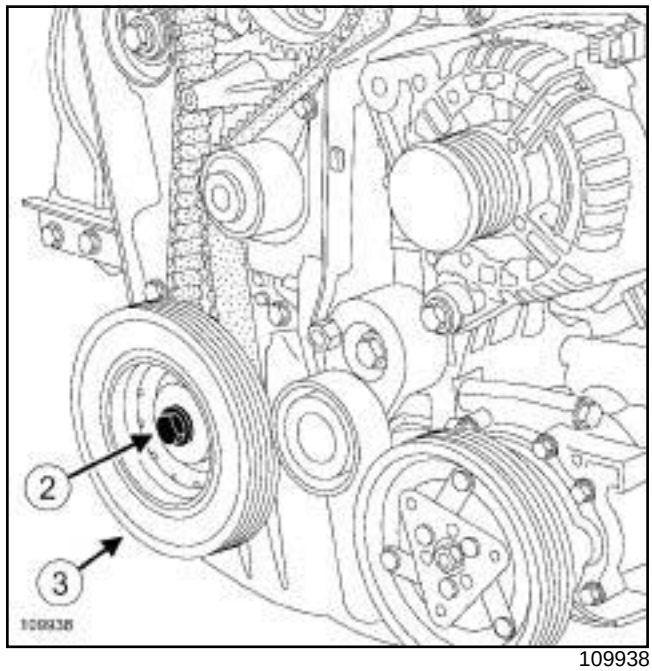

109938

❑ Remove:

- the crankshaft accessories pulley bolt (**2**) , locking the flywheel using a large screwdriver (**1**) ,
- the crankshaft accessories pulley (**3**) .

K9K

REFITTING

I - REFITTING PREPARATION OPERATION

❑ **parts always to be replaced: Crankshaft accessories pulley bolts**.

> **WARNING**
> Only use brushes with plastic or non-corrosive metal (brass) bristles.

❑ If reusing the crankshaft accessories pulley, clean the crankshaft accessories pulley V-grooves with a brush to eliminate any deposits.

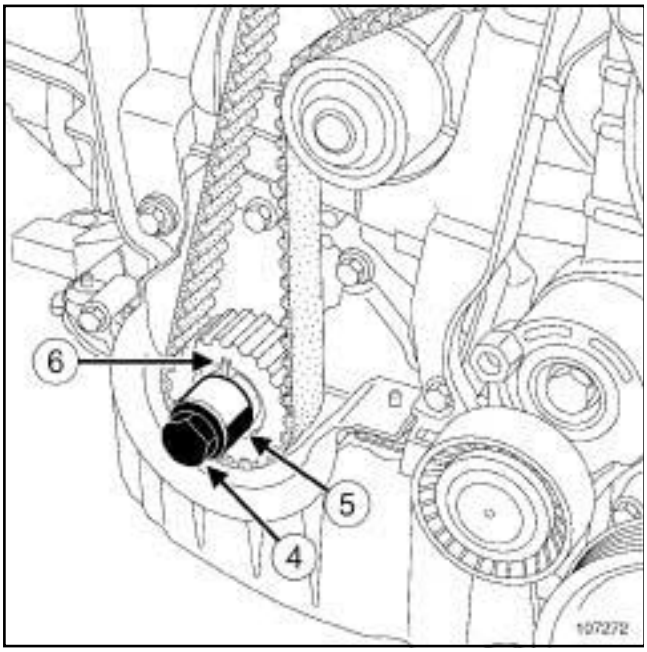

107272

❑ Refit the old crankshaft accessories pulley bolt (**4**) with a spacer (**5**) .

❑ Turn the crankshaft clockwise (timing end) using the old bolt of the crankshaft accessories pulley, until the collet ***(6)*** of the crankshaft timing pinion is almost vertical and facing upwards.

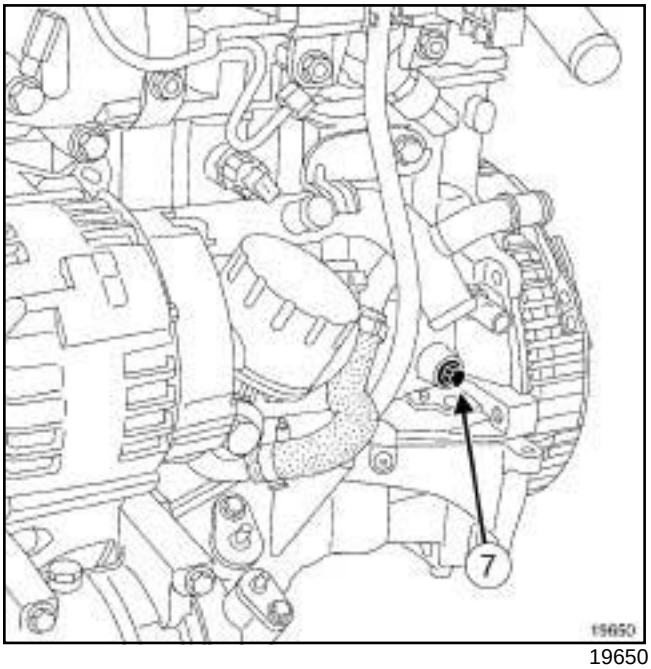

19650

❑ Remove the TDC setting pin plug (**7**) .

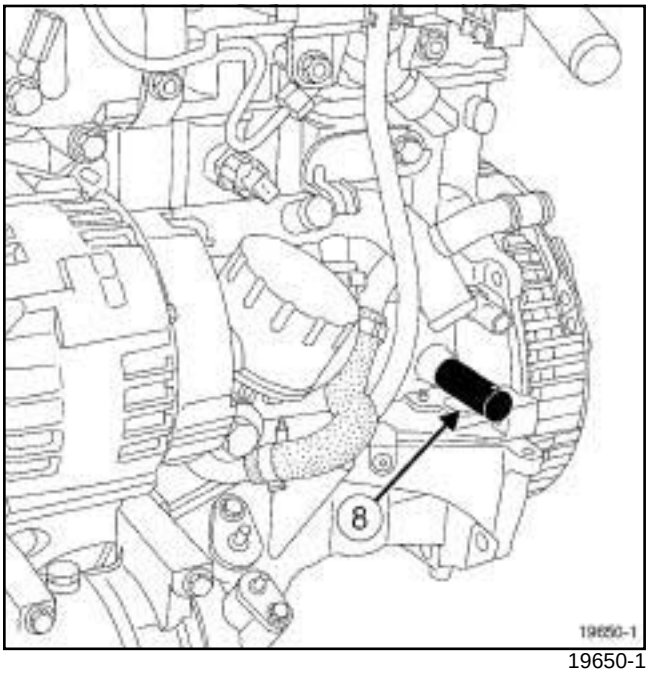

19650-1

❑ Screw the TDC setting pin **(Mot. 1489)** (**8**) into the cylinder block.

❑ Remove the old bolt from the crankshaft accessories pulley fitted with its spacer.

II - REFITTING OPERATION

❑ Refit the accessories crankshaft pulley with a new bolt.

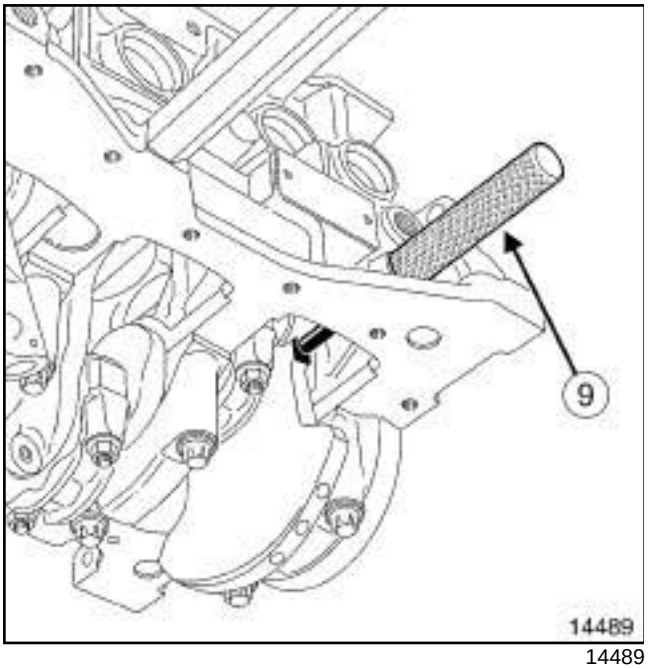

14489

- Turn the crankshaft clockwise (timing end) smoothly using the bolt of the crankshaft accessories pulley, until the crankshaft presses against the tool **(Mot. 1489)** (**9**) .

- Torque and angle tighten (with the crankshaft in contact with the TDC setting pin) the **accessories pulley bolt (120 N.m + 95° ±15°)**.

- Remove the TDC setting rod **(Mot. 1489)**.

III - FINAL OPERATION

- Apply a drop of **silicone adhesive sealant** (see **Vehicle: Parts and consumables for the repair**) (04B, Consumables - Products) to the thread of the TDC setting pin plug.

- Torque tighten the **TDC pin plug (25 N.m)**.

- Refit:

  - the accessories belt (see **11A**, **Top and front of engine**, **Accessories belt: Removal - Refitting**, page **11A-2**) ,

  - the front right-hand wheel arch side liner,

  - the front right-hand wheel arch (see **Front wheel arch liner: Removal - Refitting**) (55A, Exterior protection),

  - the plastic shield underneath the diesel filter,

  - the front right-hand wheel (see **Wheel: Removal - Refitting**) (35A, Wheels and tyres).

K4M

Tightening torques ▽	
new crankshaft accessories pulley bolt	**40 N.m + 145° ± 15°**
TDC pin plug	**25 N.m**

IMPORTANT
Wear cut-resistant gloves during the operation.

REMOVAL

I - REMOVAL PREPARATION OPERATION

❑ Position the vehicle on a lift (see **Vehicle: Towing and lifting**) (02A, Lifting equipment).

❑ Disconnect the battery (see **Battery: Removal - Refitting**) (80A, Battery).

❑ Remove:

- the air inlet duct,
- the air resonator (see **12A**, **Fuel mixture**, **Air resonator: Removal - Refitting**, page **12A-2**) ,
- the front right-hand wheel (see **Wheel: Removal - Refitting**) (35A, Wheels and tyres),
- the accessories belt (see **11A**, **Top and front of engine**, **Accessories belt: Removal - Refitting**, page **11A-2**) .

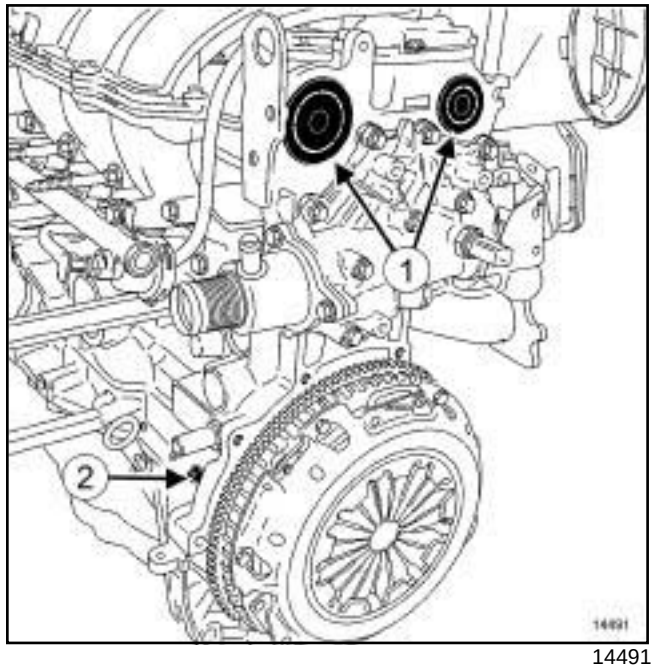

14491

❑ Pierce the centre of the plugs (**1**) at the camshaft ends with a screwdriver.

❑ Remove:

- the plugs from the camshaft ends with a screwdriver,
- the TDC setting pin plug (**2**) .

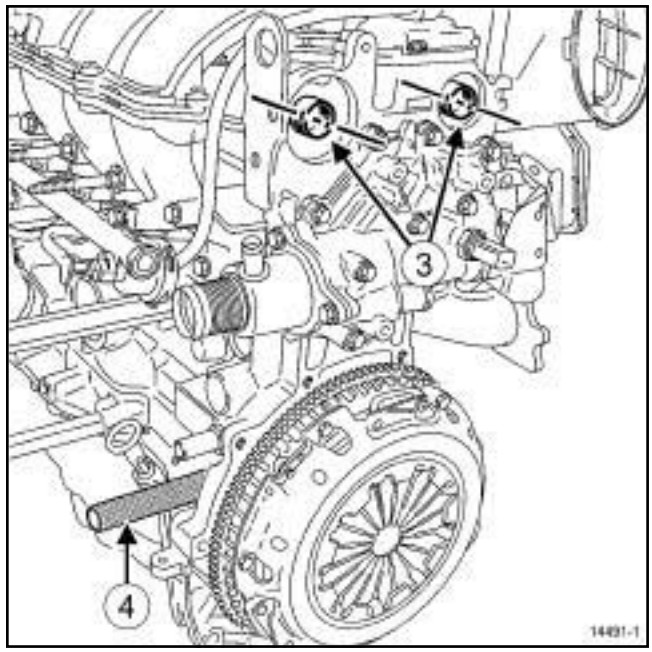

14491-1

❑ Position the camshaft grooves (**3**) almost horizontally and offset towards the bottom turning the crankshaft in the operating direction (clockwise at timing end).

❑ Screw in the TDC setting pin (**4**) .

K4M

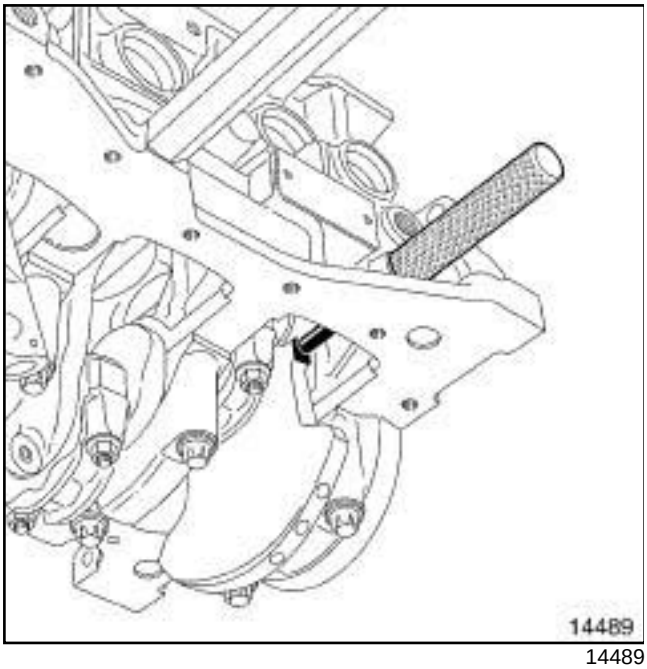

14489

❑ Turn the crankshaft in its operating direction (clockwise at timing end), until the crankshaft presses against the TDC setting pin.

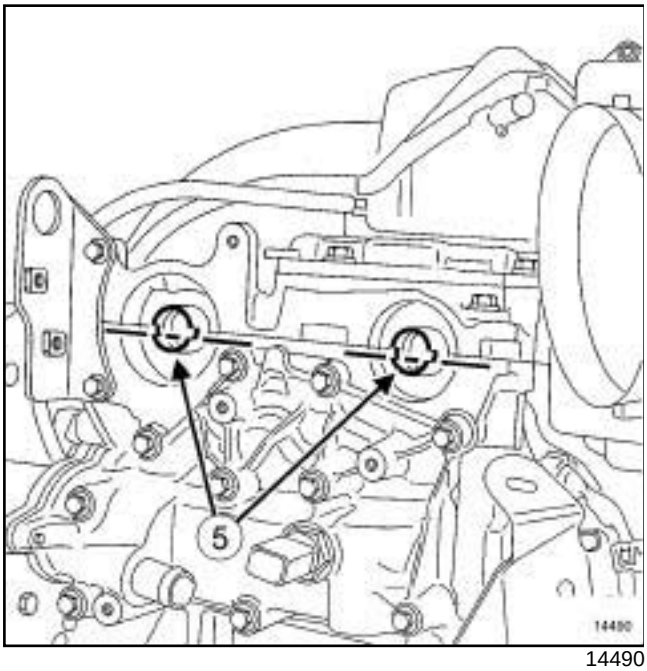

14490

❑ The camshaft grooves (**5**) must be horizontal and offset downwards.

❑ Remove the TDC setting pin.

❑ Lock the flywheel using a screwdriver.

II - REMOVAL OPERATION

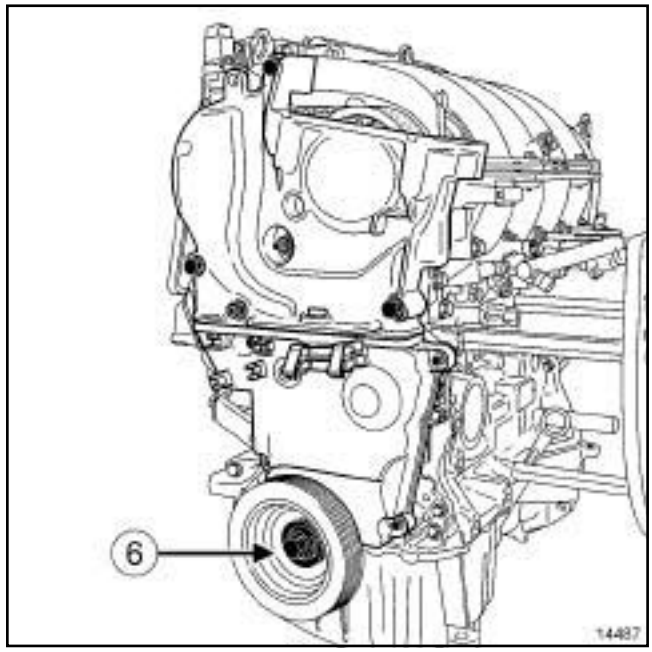

14487

❑ Remove the crankshaft accessories pulley bolt (**6**) .

REFITTING

I - REFITTING PREPARATION OPERATION

❑ **parts always to be replaced: Crankshaft accessories pulley bolts**

❑

WARNING

Be sure to degrease:

- the end of the crankshaft,
- the bearing face of the crankshaft accessories pulley.

This is to prevent timing slippage.

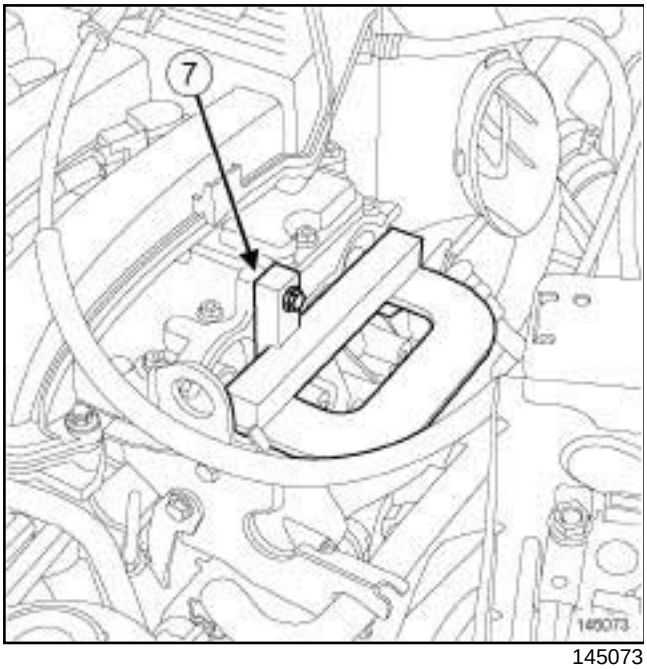

145073

- ❑ Position the setting tool.
- ❑ Secure theto the ends of the camshafts using an M6 bolt (**7**) .

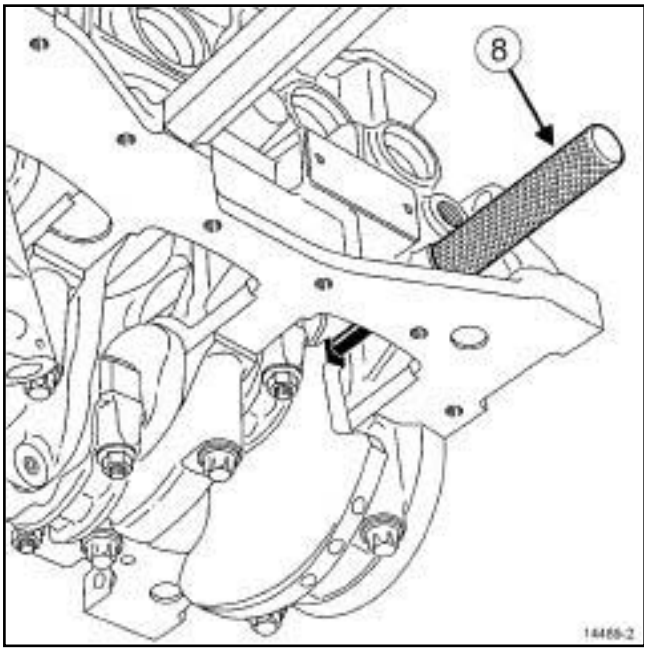

14489-2

- ❑ Screw in the TDC setting pin (**8**) .
- ❑ Check that the crankshaft is pressing against the TDC tool.
- ❑ The crankshaft groove must be upwards.

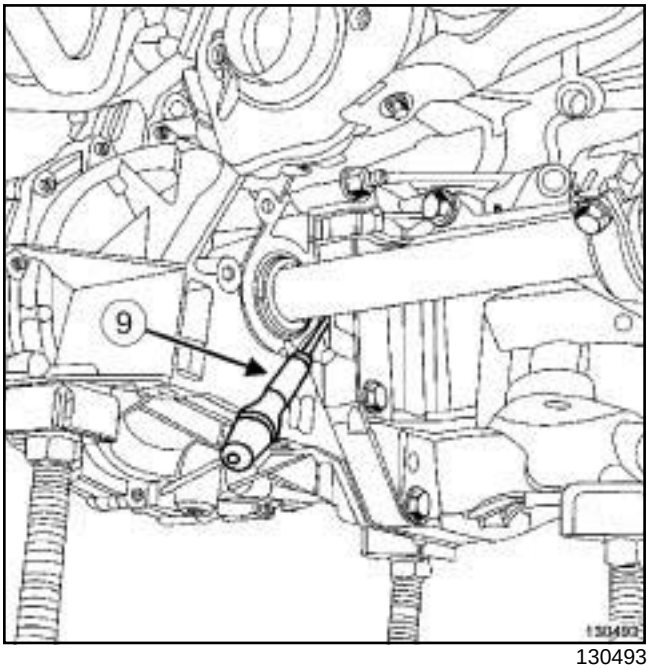

130493

- ❑ If the crankshaft is not pressing against the TDC tool, bring the crankshaft back by turning the flywheel using a screwdriver (**9**) .

II - REFITTING OPERATION

- ❑ Refit the crankshaft accessories pulley.
- ❑ Torque and angle tighten the **new crankshaft accessories pulley bolt (40 N.m + 145° ± 15°)**.

III - FINAL OPERATION

- ❑ Remove:
  - the TDC tool,
  - the setting tool.
- ❑ Refit:
  - a new inlet camshaft plug using the,
  - a new exhaust camshaft plug using the.
- ❑ Place a drop of **SILICONE ADHESIVE SEALANT** (see **Vehicle: Parts and consumables for the repair**) on the threading of the TDC pin plug.
- ❑ Refit the TDC setting pin plug.
- ❑ Torque tighten the **TDC pin plug (25 N.m)**.
- ❑ Refit:
  - the accessories belt (see **11A**, **Top and front of engine**, **Accessories belt: Removal - Refitting**, page **11A-2**) ,
  - the front right-hand wheel (see **Wheel: Removal - Refitting**) (35A, Wheels and tyres),

K4M

- the air resonator (see **12A**, **Fuel mixture**, **Air resonator: Removal - Refitting**, page **12A-2**) ,
- the air inlet duct.

❑ Connect the battery (see **Battery: Removal - Refitting**) (80A, Battery).

K4M

Tightening torques ▽	
timing fixed roller bolt	**50 N.m**
new crankshaft accessories pulley bolt	**40 N.m + 145° ± 15°**
timing tension wheel nut	**27 N.m**
lower timing cover bolts	**12 N.m**
nut of each camshaft sprocket	**30 N.m + 84° ± 4°**
TDC pin plug	**20 N.m**
upper timing cover bolts	**46 N.m**
upper timing cover nuts	**46 N.m**
flywheel end lifting eye bolts	**10 N.m**

IMPORTANT
Wear cut-resistant gloves during the operation.

REMOVAL

I - REMOVAL PREPARATION OPERATION

❑ Position the vehicle on a two-post lift (see **Vehicle: Towing and lifting**) (02A, Lifting equipment).

❑ Disconnect the battery (see **Battery: Removal - Refitting**) (80A, Battery).

❑ Remove:

- the air inlet duct,
- the air resonator (see **12A**, **Fuel mixture**, **Air resonator: Removal - Refitting**, page **12A-2**) ,
- the front right-hand wheel (see **Wheel: Removal - Refitting**) (35A, Wheels and tyres),
- the accessories belt (see **11A**, **Top and front of engine**, **Accessories belt: Removal - Refitting**, page **11A-2**) ,
- the crankshaft accessories pulley (see **11A**, **Top and front of engine**, **Crankshaft accessories pulley: Removal - Refitting**, page **11A-10**) ,
- the right-hand suspended engine mounting (see **19D**, **Engine mounting**, **Right-hand suspended engine mounting: Removal - Refitting**, page **19D-4**) .

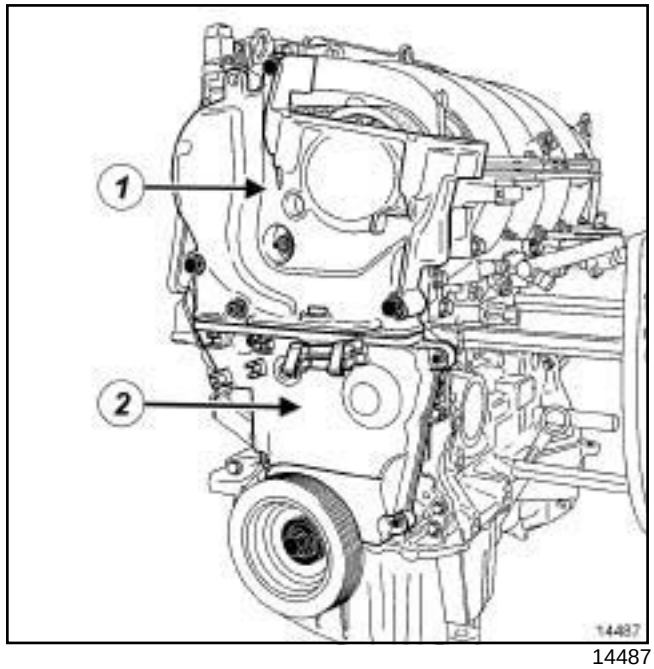

14487

❑ Remove:

- the upper timing cover bolts (**1**) ,
- the upper timing cover,
- the lower timing cover bolts (**2**) ,
- the lower timing cover.

K4M

II - REMOVAL OPERATION

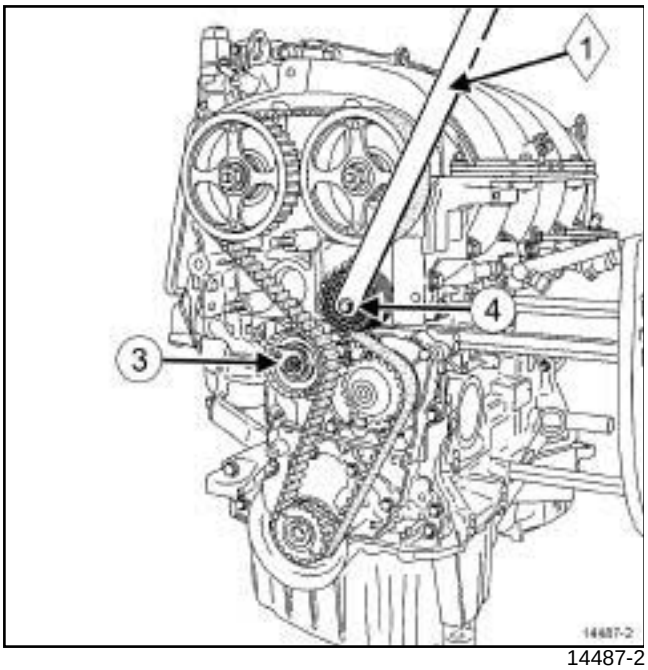

14487-2

❑ Loosen the nut (**3**) of the timing tensioning roller.

> Note:
>
> Do not drop the crankshaft timing sprocket when removing the timing belt.

❑ Remove:

- the timing fixed roller bolt (**4**) using the tool (**1**) ,
- the timing fixed roller,
- the timing belt,
- the timing tensioning roller nut,
- the timing tensioning roller,
- the crankshaft timing sprocket.

REFITTING - PROCEDURE 1

I - REFITTING PREPARATION OPERATION

❑ **parts always to be replaced: Timing belt**,

❑ **parts always to be replaced: Timing belt tensioning roller**,

❑ **parts always to be replaced: Crankshaft accessories pulley bolts**,

❑ **parts always to be replaced: Inlet camshaft cap**,

❑ **parts always to be replaced: Timing fixed roller**,

❑ **parts always to be replaced: Exhaust camshaft cap**.

II - REFITTING OPERATION FOR PART CONCERNED

❑ The first procedure applies to replacing any timing face component which has a crankshaft timing sprocket without a collet and which does not require one or more of the camshaft sprockets to be loosened.

1 - Adjusting the timing

❑

> **WARNING**
>
> Be sure to degrease:
>
> - the end of the crankshaft (timing end),
> - the timing sprocket pressure faces and bore of the crankshaft,
> - the crankshaft accessories pulley bearing faces,
> - the camshaft ends (timing end),
> - the camshaft sprocket bores and bearing faces.
>
> This is to avoid timing slippage.
>
> This slippage leads to engine damage.

❑ Set the camshaft grooves horizontally and below the centre line by turning the camshafts with theif necessary.

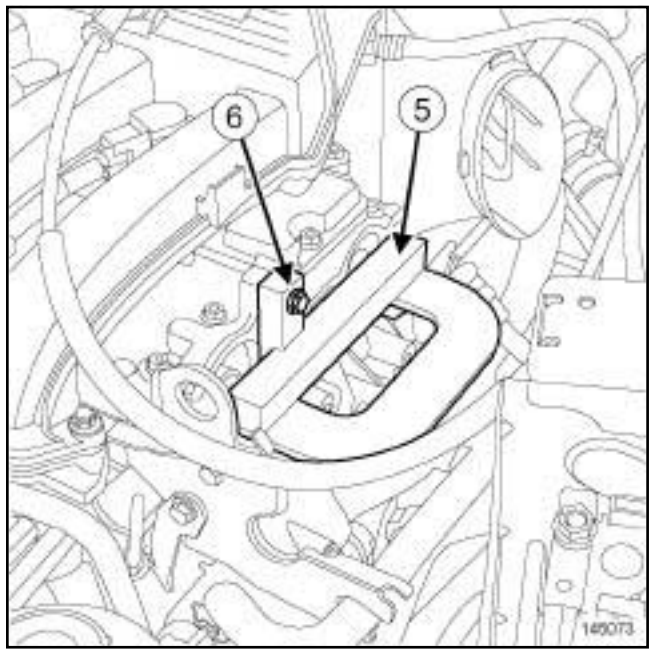

145073

❑ Fit:

- the (**5**) onto the ends of the camshafts,
- a lifting eye bolt (**6**) to secure the.

K4M

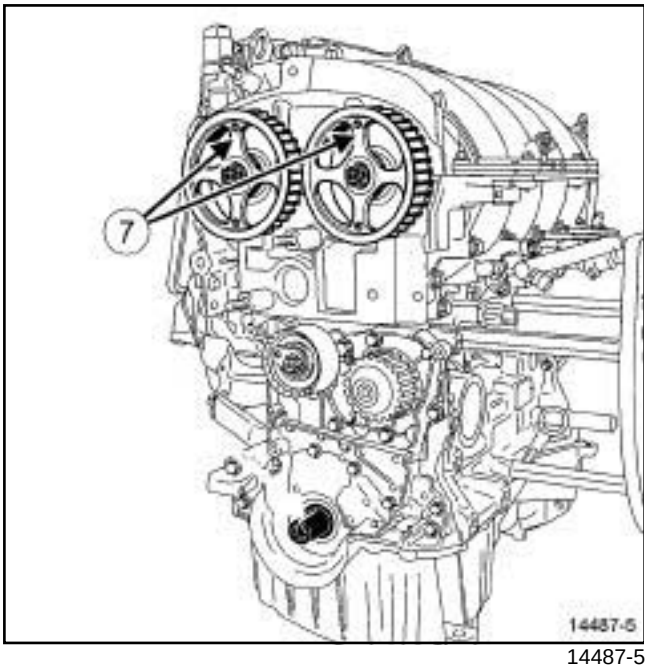

14487-5

❑ Position the RENAULT badge (**7**) engraved on the stem of each camshaft sprocket vertically and pointing upwards.

2 - Refitting

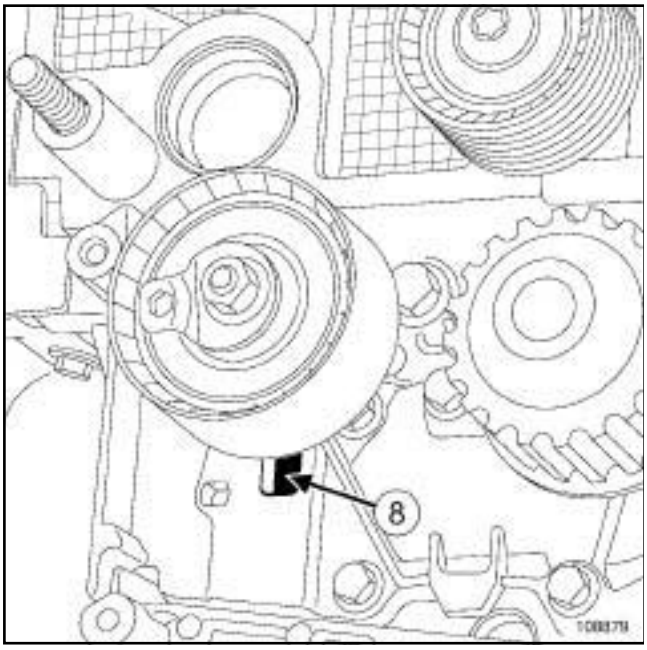

108879

❑ Refit a new timing tensioning roller by positioning the lug of the timing tensioning roller in the groove (**8**) .

❑ Screw on the timing tensioning roller nut without tightening it.

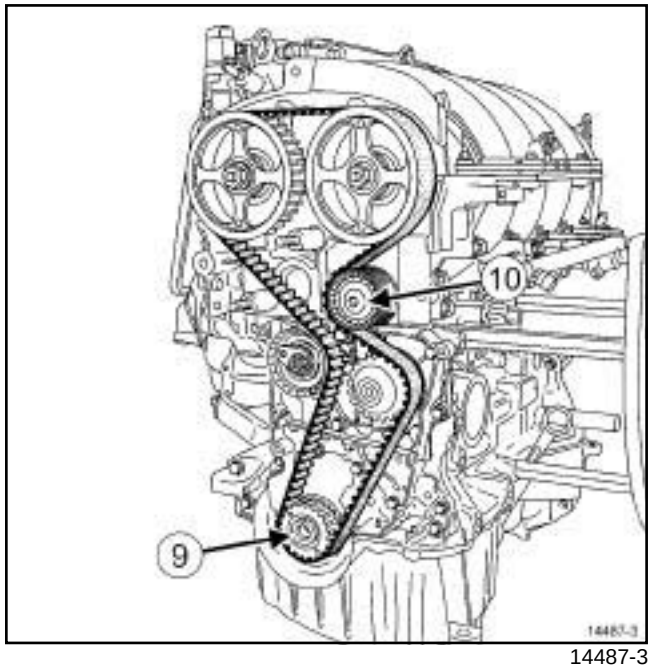

14487-3

❑ Refit:

- the crankshaft timing sprocket (**9**) ,
- a new timing belt,
- a new timing fixed roller (**10**) .

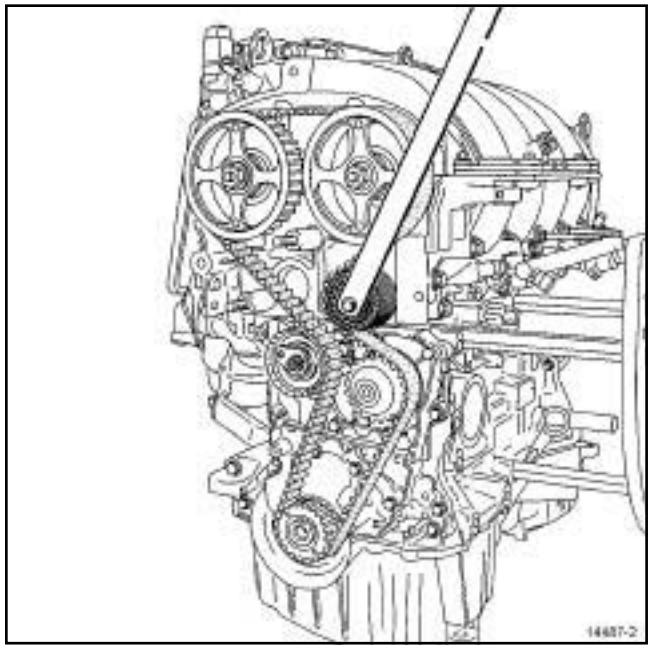

14487-2

❑ Torque tighten the **timing fixed roller bolt (50 N.m)** using the tool.

K4M

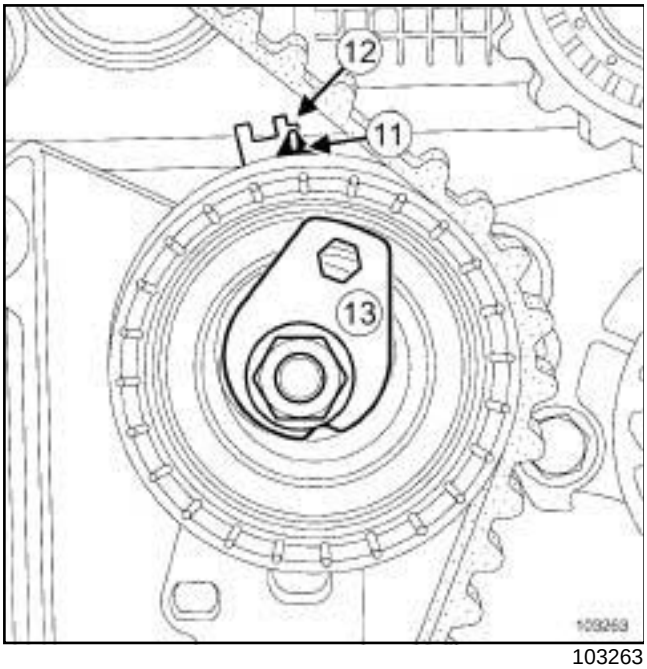

103263

- ❑ Position the adjustable index (**11**) opposite the mark (**12**) , by turning the eccentric (**13**) clockwise using a **6 mm** Allen key.
- ❑ Torque tighten the **timing tensioning roller nut (7 N.m)**.
- ❑ Refit the toolon the cylinder block.

> Note:
>
> There are two types of lower timing cover:
>
> - without a timing flap,
> - with a timing flap.

a - Lower timing cover with a timing flap

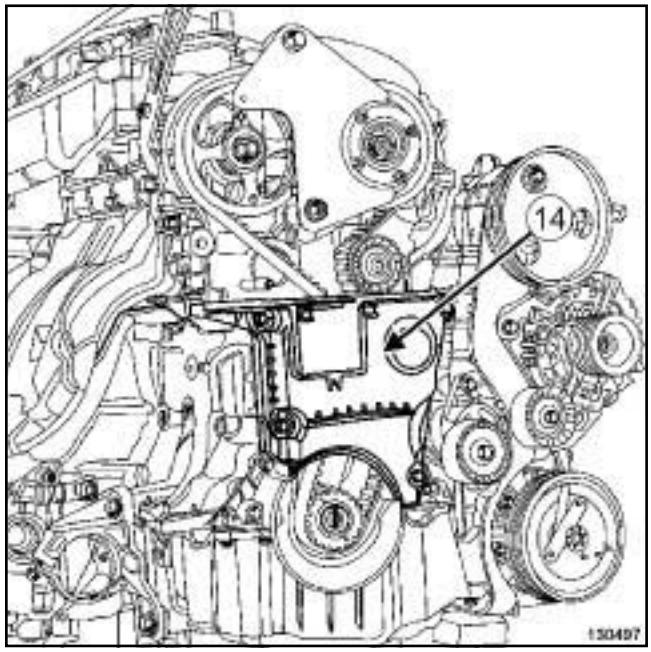

130497

- ❑ Refit the lower timing cover (**14**) .
- ❑ Tighten to torque the **lower timing cover bolts (12 N.m)**.

b - continuation of the refitting procedure regardless of the type of lower timing cover

- ❑ Refit a new crankshaft accessories pulley.

K4M

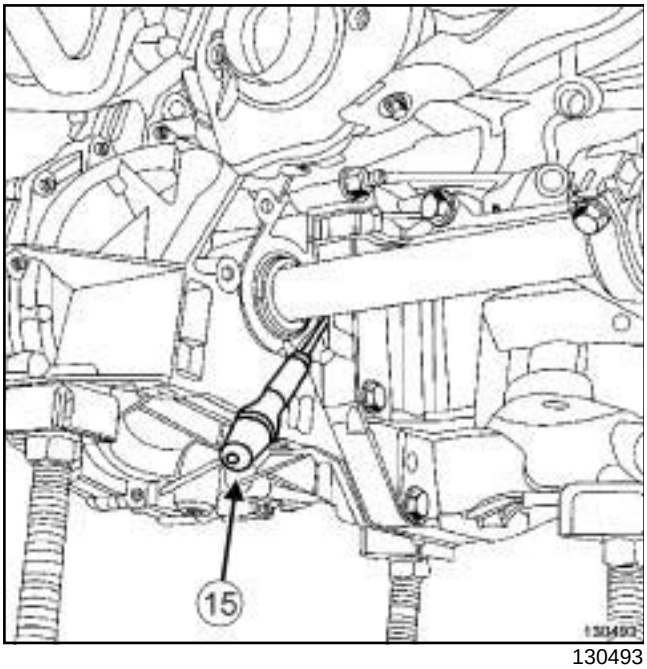

130493

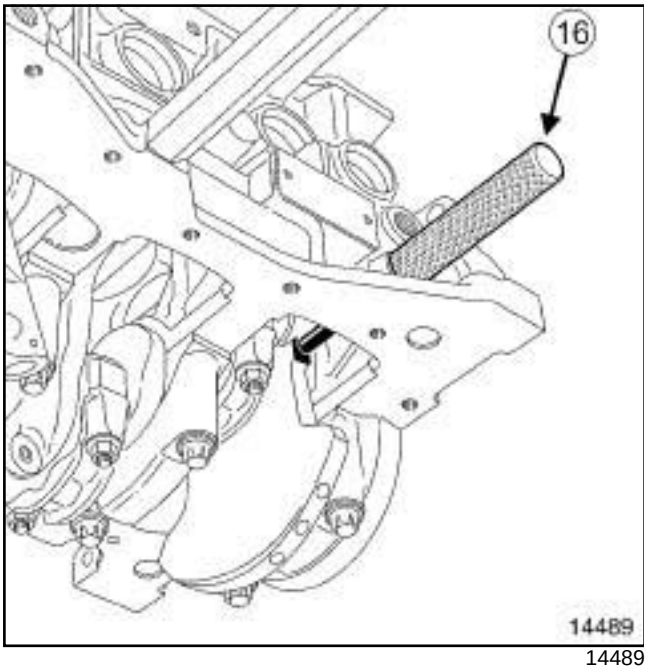

14489

❑ Use a screwdriver (**15**) to check that the flywheel does not turn (clockwise at the timing end), otherwise bring the crankshaft back into contact with the tool (**16**) using the screwdriver; the crankshaft groove should be at the top.

❑ Torque and angle tighten a **new crankshaft accessories pulley bolt (40 N.m + 145° ± 15°)** (crankshaft in contact with the tool).

c - Lower timing cover with a timing flap

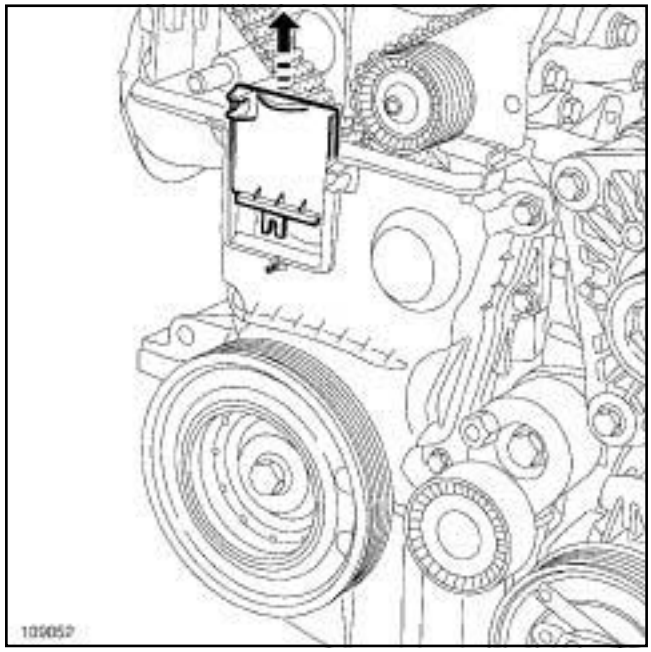

109052

❑ Remove the timing flap from the lower timing cover.

d - continuation of the refitting procedure regardless of the type of lower timing cover

❑ Remove:

- the bolt of the tool,
- the setting tool,
- thefrom the cylinder block.

3 - Checking the tension

❑ Rotate the crankshaft twice clockwise at the timing end and before aligning the marks made previously by the operator (on the camshaft dephaser), screw the toolinto the cylinder block.

❑ Move the crankshaft slowly and smoothly until it comes into contact with the tool.

❑ Remove the toolfrom the cylinder block.

K4M

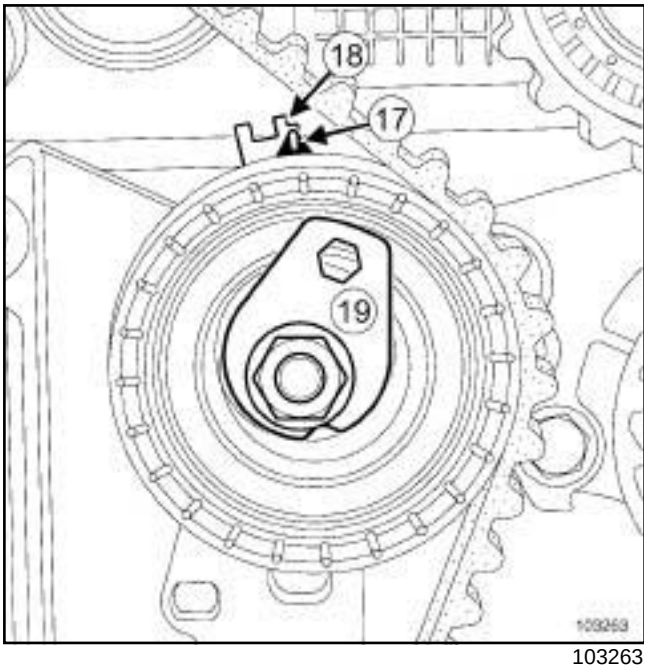

103263

❑ Check that the adjustable index (**17**) is opposite the notch (**18**) , if this is not the case:

- loosen the timing tensioning roller nut by up to one turn while holding the eccentric with a **6 mm** Allen key,
- gradually move the adjustable index marker (**17**) opposite the mark (**18**) turning the eccentric cam (**19**) clockwise.

❑ Torque tighten the **timing tension wheel nut (27 N.m)**.

4 - Checking the timing

❑ Ensure that the index and the notch on the timing tensioning roller are in the correct position before checking the timing.

❑ Screw toolinto the cylinder block.

❑ Move the crankshaft slowly and smoothly until it comes into contact with the tool.

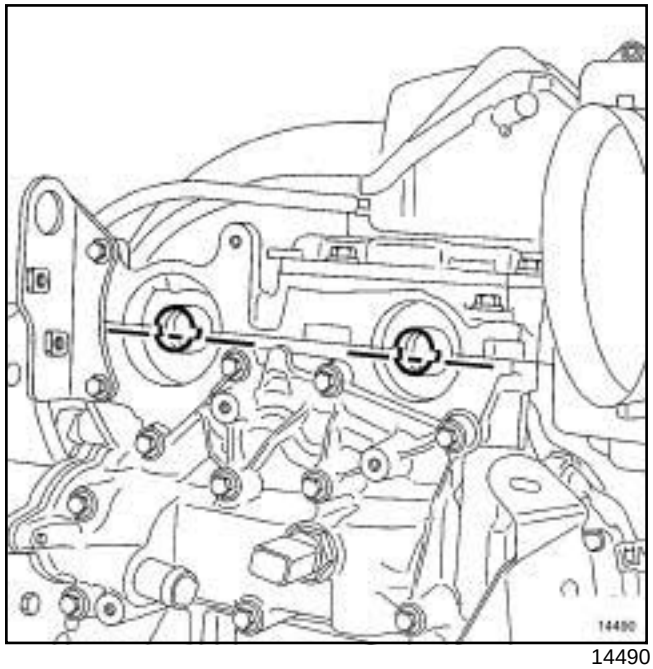

14490

❑ Position (without forcing) the camshaft setting tool(the camshaft end grooves must be horizontal and offset towards the bottom).

> Note:
>
> The timing adjustment and tensioning operation must be repeated if the camshaft setting tool does not engage.

❑ Remove:

- the setting tool,
- thefrom the cylinder block.

K4M

a - Lower timing cover with a timing flap

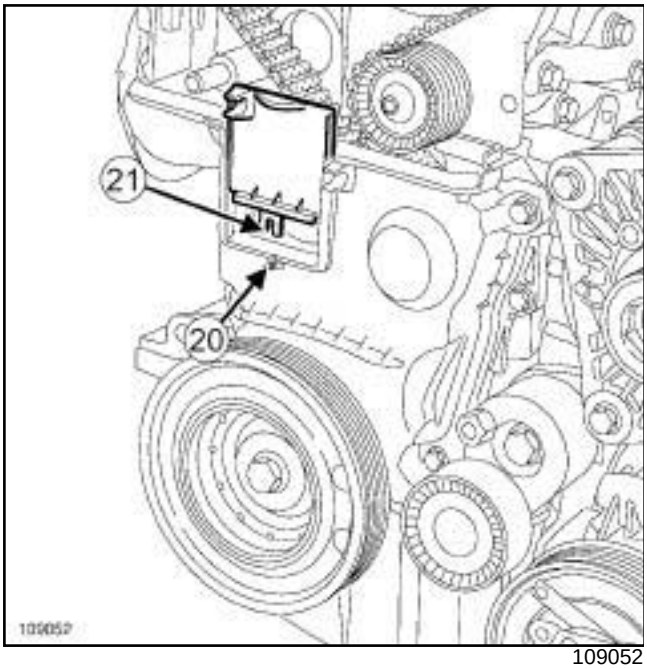

109052

❑ Refit the lower timing cover flap, checking that the locating pin (**20**) fits properly in the notch (**21**) .

b - Lower timing cover without a timing flap

❑ Refit the lower timing cover.

❑ Tighten to torque the **lower timing cover bolts (12 N.m)**.

REFITTING -PROCEDURE 2

I - REFITTING PREPARATION OPERATION

❑ **parts always to be replaced: Timing belt**,

❑ **parts always to be replaced: Timing belt tensioning roller**,

❑ **parts always to be replaced: Timing fixed roller**,

❑ **parts always to be replaced: Crankshaft accessories pulley**,

❑ **parts always to be replaced: camshaft timing sprocket nut**,

❑ **parts always to be replaced: Crankshaft accessories pulley bolts**,

❑ **parts always to be replaced: Inlet camshaft cap**,

❑ **parts always to be replaced: Exhaust camshaft cap**.

II - REFITTING OPERATION

❑ The second procedure is used when replacing any timing face component which has a crankshaft timing sprocket with or without a collet, that requires one or more of the camshaft sprockets to be loosened.

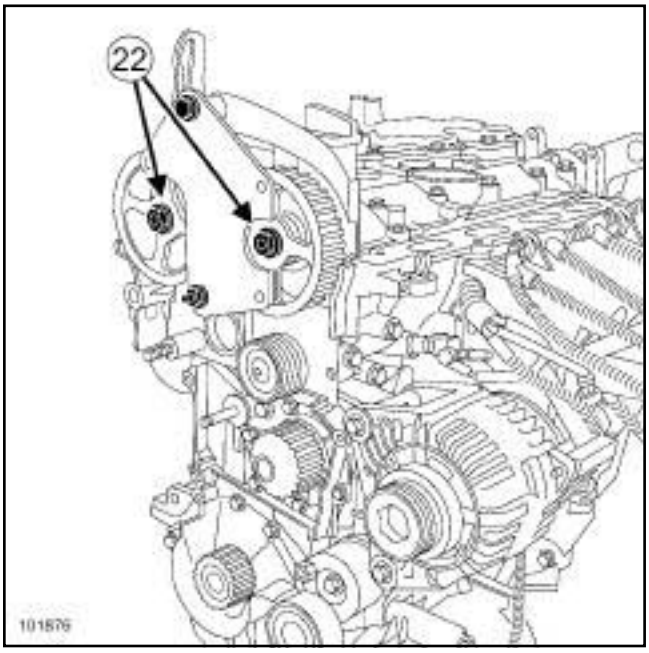

101876

❑ Fit the toolon the camshaft sprockets using the tool.

❑ Loosen the nuts (**22**) of each camshaft sprocket.

❑ Remove:

- the toolfrom the cylinder block,
- every camshaft sprocket nut,
- the camshaft sprockets.

K4M

1 - Adjusting the timing

❑

Note:

If the stud loosens with the nut (see **11A**, **Top and front of engine**, **Camshaft: Removal - Refitting**, page **11A-49**) (11A, Top and front of engine).

WARNING

Always degrease:

- the end of the crankshaft (timing end),
- the timing sprocket pressure faces and bore of the crankshaft,
- the crankshaft accessories pulley bearing faces,
- the camshaft ends (timing end),
- the camshaft sprocket bores and bearing faces.

This is to avoid timing slippage.

This slippage leads to engine damage.

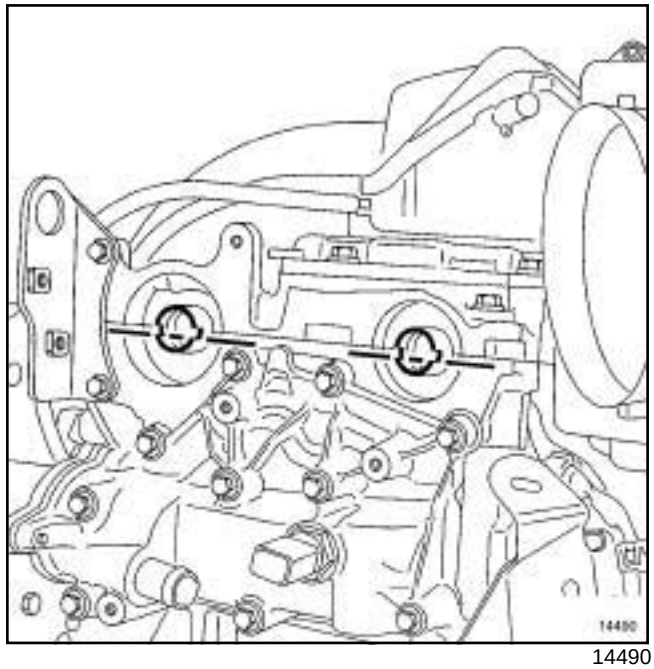

14490

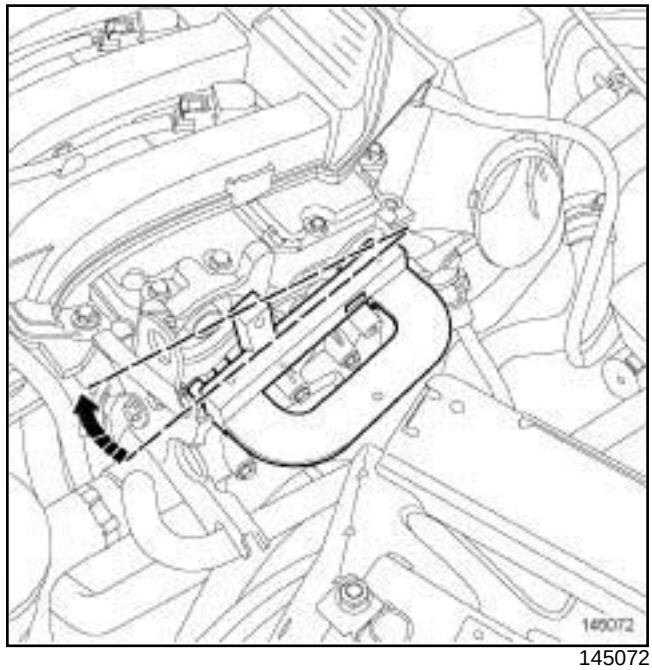

145072

❑ Position the camshaft grooves horizontally and below the centre line, by turning the camshafts with theif necessary.

K4M

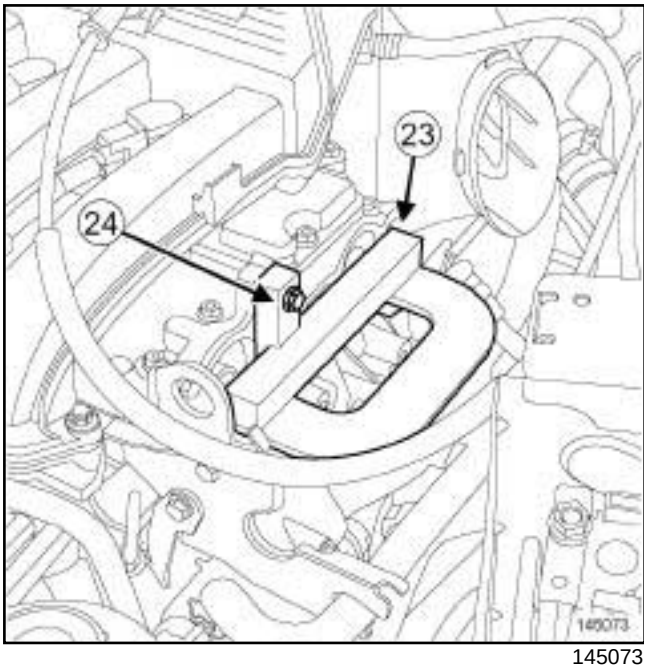

145073

❑ Fit:

- the (**23**) onto the ends of the camshafts,
- an M6 bolt (**24**) to hold the.

❑ Refit:

- the crankshaft timing sprocket,
- the camshaft sprockets,
- every camshaft sprocket nut.

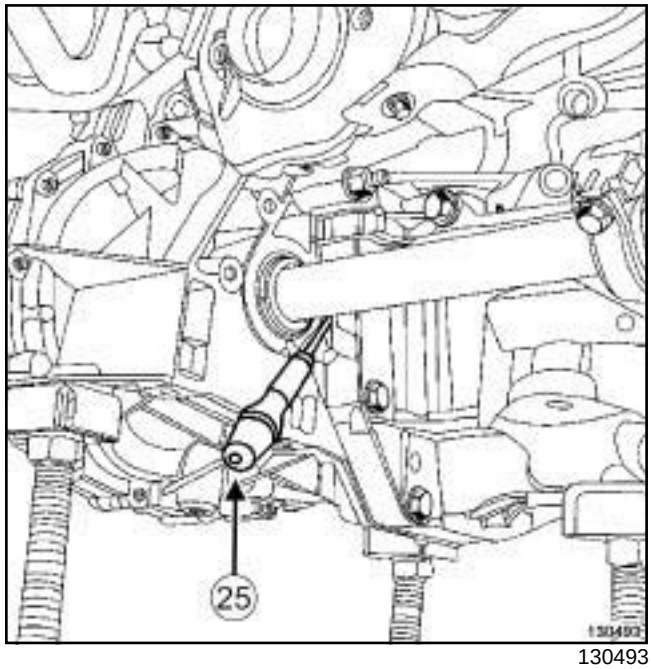

130493

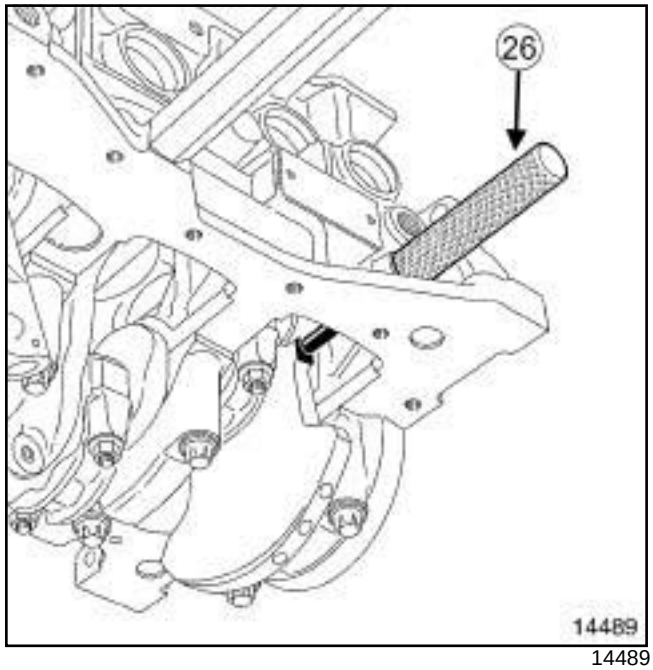

14489

❑ Refit the toolon the cylinder block.

❑ Use a screwdriver (**25**) to check that the flywheel does not turn (clockwise at the timing end), otherwise bring the crankshaft back into contact with the tool (**26**) using the screwdriver; the crankshaft groove should be at the top.

K4M

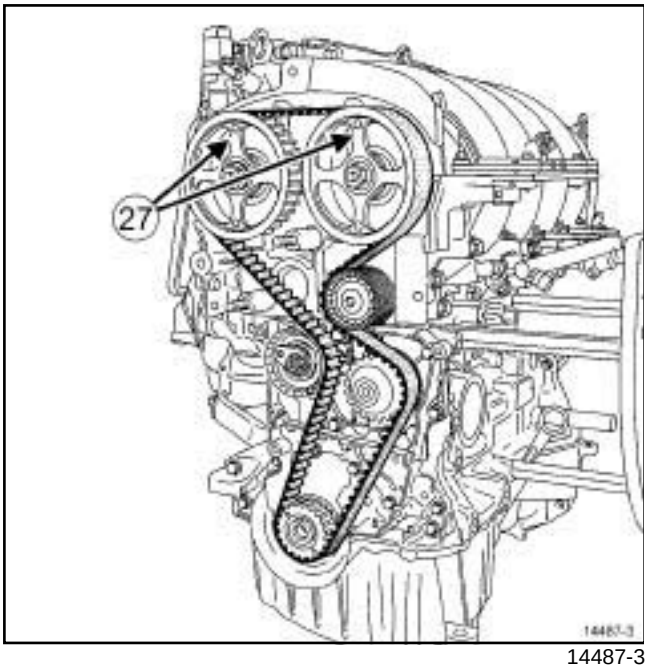

14487-3

❑ Position the RENAULT badge (**27**) etched on the stem of each camshaft sprocket vertically and pointing upwards.

2 - Refitting

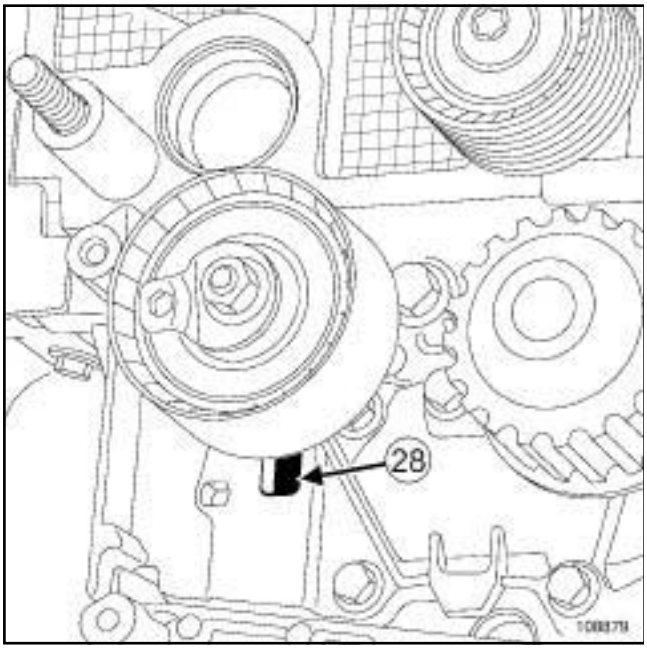

108879

❑ Refit a new timing tensioning roller by positioning the lug of the timing tensioning roller in the groove (**28**) .

❑ Screw on the timing tensioning roller nut without tightening it.

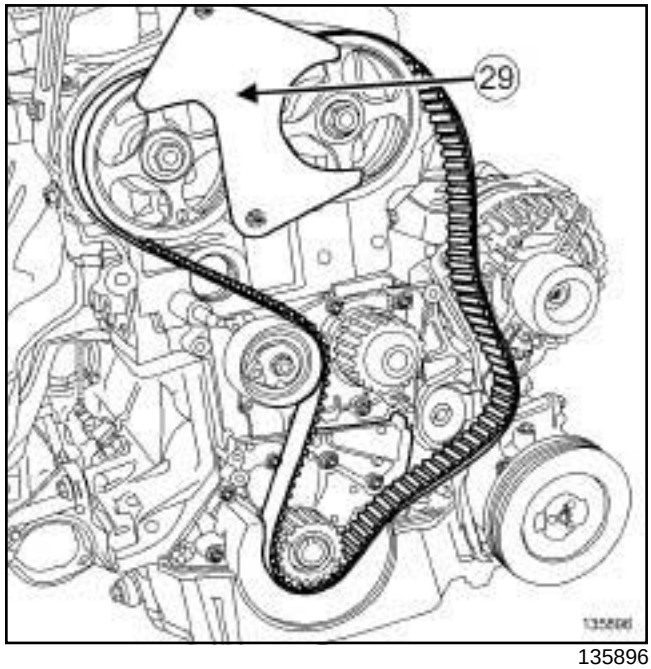

135896

❑ Refit a new timing belt starting with the sprocket of each camshaft (without moving the sprocket of each camshaft).

❑ Fit the tool (**29**) on the camshaft sprockets (use the bolt and nut of the upper timing cover to fit the tool).

Note:

Take care to properly tighten the timing belt between the two camshaft sprockets.

Note:

If the engine is equipped with a crankshaft timing sprocket with a collet, take care to properly tighten the timing belt between the exhaust camshaft sprocket and the crankshaft timing sprocket.

K4M

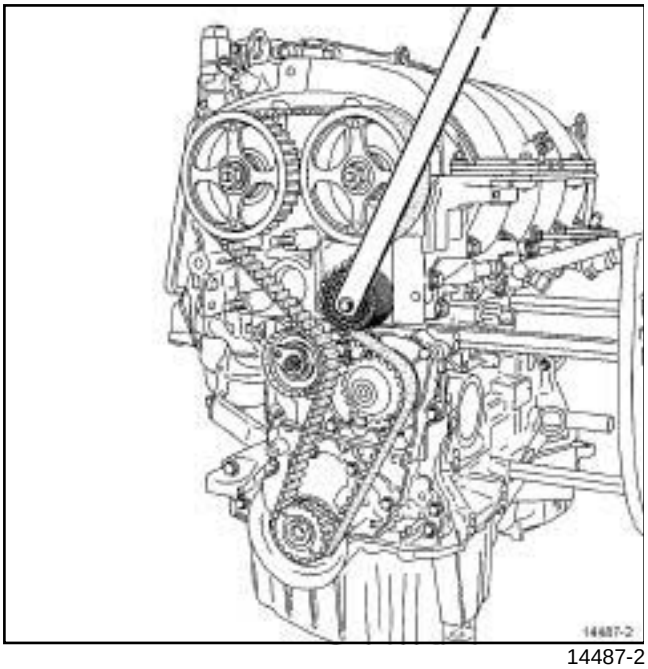

14487-2

❑ Refit a new timing fixed roller.

❑ Torque tighten the **timing fixed roller bolt (50 N.m)** using the tool.

3 - Timing belt tension

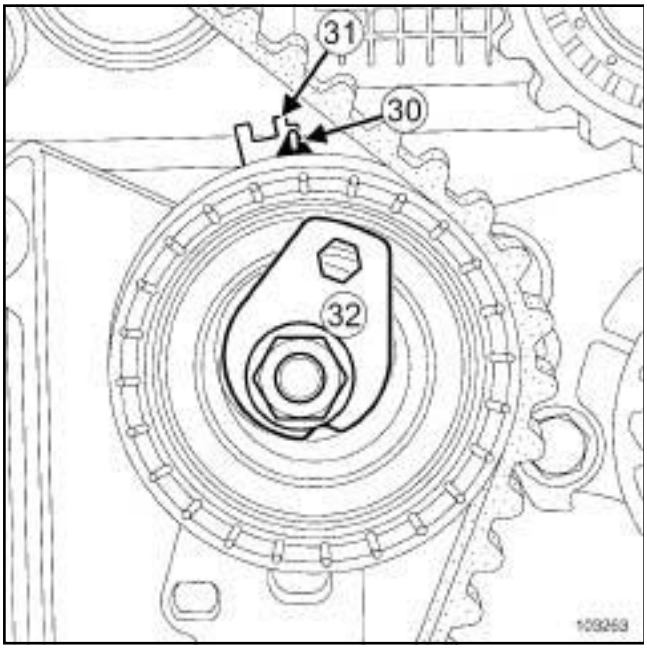

103263

❑ Position the adjustable index (**30**) opposite the mark (**31**) , by turning the eccentric (**32**) clockwise using an Allen key.

❑ Torque tighten the **timing tensioning roller nut (7 N.m)**.

> Note:
>
> There are two types of lower timing cover:
>
> - without a timing flap,
>
> - with a timing flap.

a - Lower timing cover with a timing flap

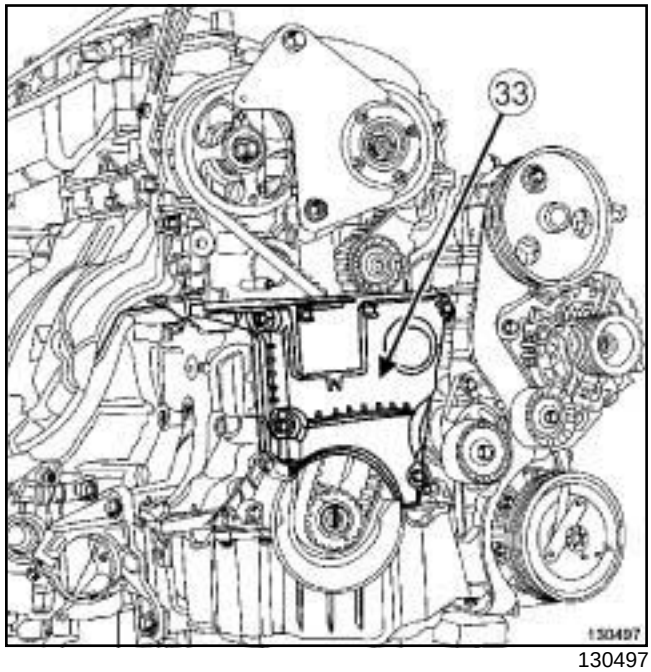

130497

❑ Refit the lower timing cover (**33**) .

❑ Tighten to torque the **lower timing cover bolts (12 N.m)**.

b - continuation of the refitting procedure regardless of the type of lower timing cover

❑ Refit a new crankshaft accessories pulley.

❑ Torque and angle tighten:

- the **new bolt of the crankshaft accessories pulley (40 N.m + 145° ± 15°)**,
- the **nut of each camshaft sprocket (30 N.m + 84° ± 4°)**.

K4M

c - Lower timing cover with a timing flap

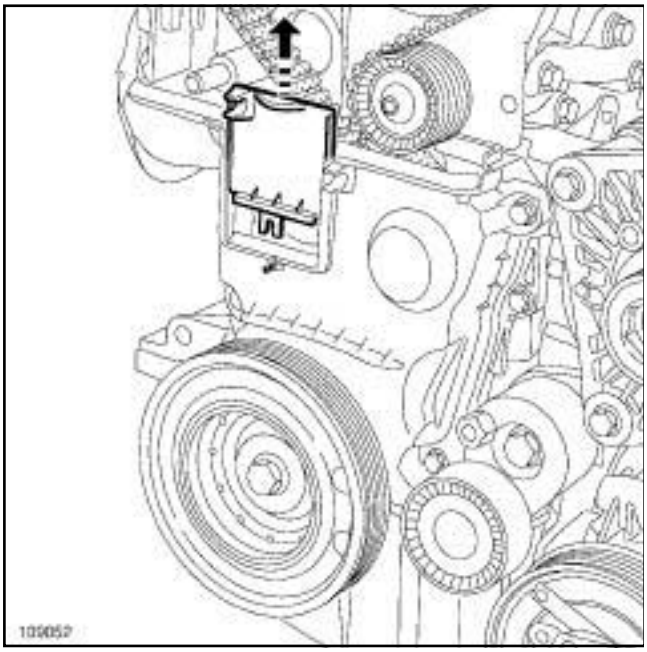

109052

❑ Remove the timing flap from the lower timing cover.

d - continuation of the refitting procedure regardless of the type of lower timing cover

❑ Remove:

- the bolt of the tool,
- the,
- the toolfrom the cylinder block,
- the.

4 - Checking the tension

❑ Rotate the crankshaft twice clockwise at the timing end and before aligning the marks made previously by the operator (on the camshaft dephaser), screw the toolinto the cylinder block.

❑ Move the crankshaft slowly and smoothly until it comes into contact with the tool.

❑ Remove the toolfrom the cylinder block.

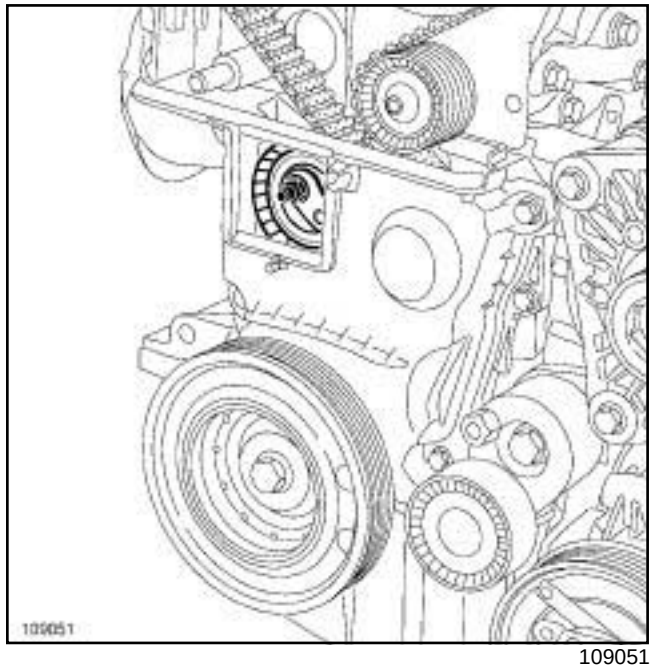

109051

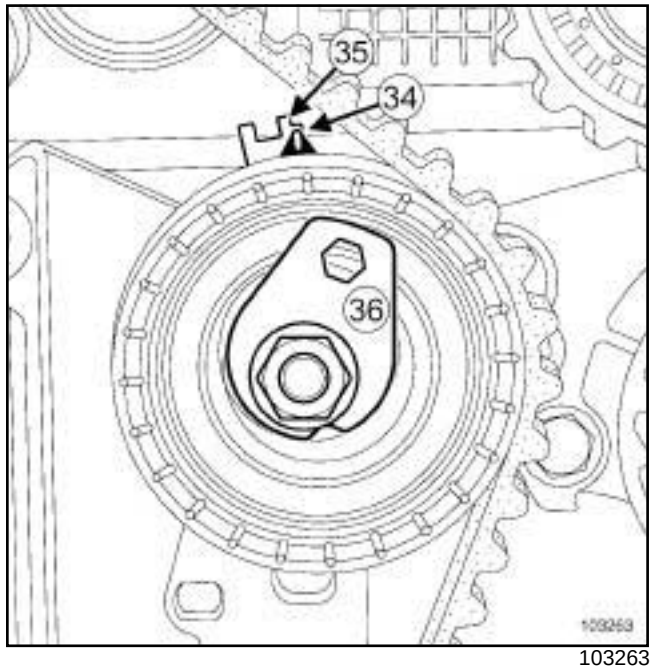

103263

❑ Check that the adjustable index (**34**) is opposite the notch (**35**) , if this is not the case:

- loosen the timing tensioning roller nut by up to one turn while holding the eccentric with an Allen key,
- gradually move the adjustable index marker (**34**) opposite the mark (**35**) turning the eccentric cam (**36**) clockwise.

❑ Torque tighten the **timing tensioning roller nut (27 N.m)**.

K4M

5 - Checking the timing

❑ Ensure that the index and the notch on the timing tensioning roller are in the correct position before checking the timing.

❑ Screw toolinto the cylinder block.

❑ Move the crankshaft slowly and smoothly until it comes into contact with the tool.

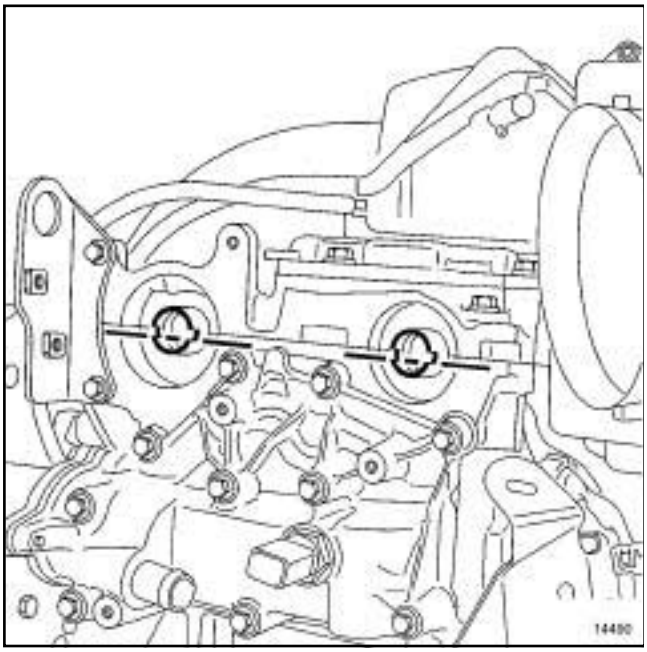

14490

❑ Position (without forcing) the(the camshaft end grooves must be horizontal and offset downwards).

> Note:
>
> If thecannot be engaged, readjust the timing and the tension.

❑ Remove:

- the setting tool,
- thefrom the cylinder block.

a - Lower timing cover with a timing flap

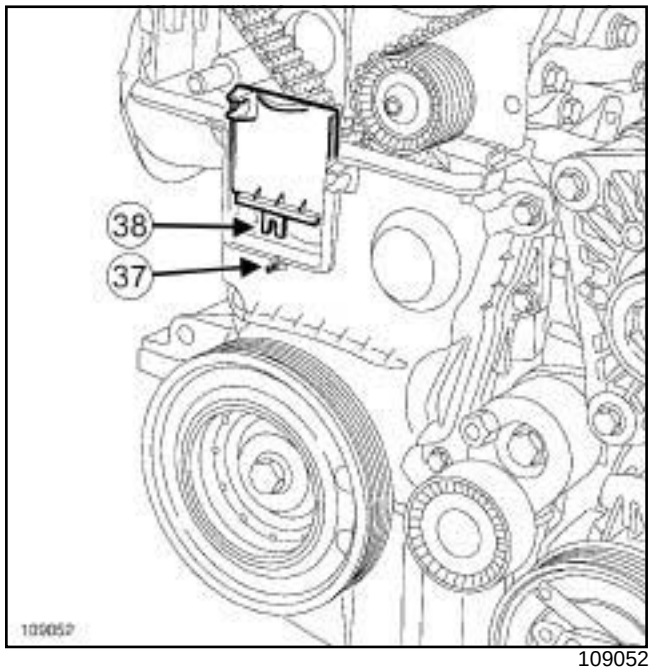

109052

❑ Refit the lower timing cover flap, checking that the locating pin (**37**) fits properly in the notch (**38**) .

b - Lower timing cover without a timing flap

❑ Refit the lower timing cover.

❑ Tighten to torque the **lower timing cover bolts (12 N.m)**.

III - FINAL OPERATION

❑ Apply a drop of **SILICONE ADHESIVE SEALANT** (see **Vehicle: Parts and consumables for the repair**) (04B, Consumables - Products) to the thread of the TDC pin plug.

❑ Tighten to torque the **TDC pin plug (20 N.m)**.

❑ Refit the upper timing cover.

❑ Torque tighten:

- the **upper timing cover bolts (46 N.m)**,
- the **upper timing cover nuts (46 N.m)**.

❑ Refit:

- a new inlet camshaft plug using the,
- a new exhaust camshaft plug using the,
- the engine lifting eye at the flywheel end.

❑ Torque tighten the **flywheel end lifting eye bolts (10 N.m)**.

K4M

❑ Refit:

- the right-hand suspended engine mounting (see **19D**, **Engine mounting**, **Right-hand suspended engine mounting: Removal - Refitting**, page **19D-4**) ,
- the accessories belt (see **11A**, **Top and front of engine**, **Accessories belt: Removal - Refitting**, page **11A-2**) ,
- the front right-hand wheel (see **Wheel: Removal - Refitting**) (35A, Wheels and tyres),
- the air resonator (see **12A**, **Fuel mixture**, **Air resonator: Removal - Refitting**, page **12A-2**) ,
- the air inlet duct.

❑ Connect the battery (see **Battery: Removal - Refitting**) (80A, Battery).

K9K, and 796

Special tooling required	
Mot. 1453	Engine anchorage support with multiple adjustments and retaining straps.
Mot. 1489	TDC locating pin.
Mot. 1430	Set of 5 crankshaft and camshaft pulley timing pins.

Tightening torques ▽	
timing belt tensioning roller bolt	**27 N.m**
accessories pulley M14 bolt	**120 N.m + 95° ± 15°**
timing belt tensioning roller bolt	**27 N.m**
TDC pin plug	**25 N.m**
right-hand suspended engine mounting bolts	**25 N.m**

IMPORTANT
To avoid all risk of damage to the systems, apply the safety and cleanliness instructions and operation recommendations before carrying out any repair (see **Engine: Precautions for the repair**) .

IMPORTANT
Wear protective gloves during every operation.

WARNING
Never run the engine in the opposite direction to that of normal operation.

WARNING
Do not run the engine without the accessories belt to avoid damaging the crankshaft accessories pulley.

REMOVAL

I - REMOVAL PREPARATION OPERATION

❑ Position the vehicle on a two-post lift (see **Vehicle: Towing and lifting**) (02A, Lifting equipment).

❑ Disconnect the battery (see **Battery: Removal - Refitting**) (80A, Battery).

❑ Remove the front right-hand wheel (see **Wheel: Removal - Refitting**) (35A, Wheels and tyres).

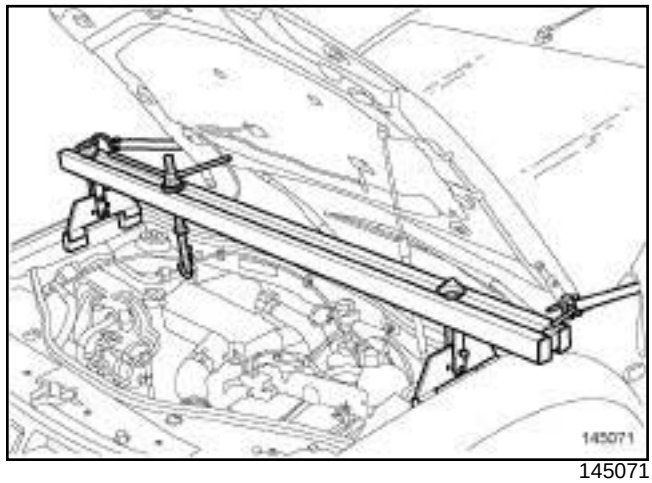

145071

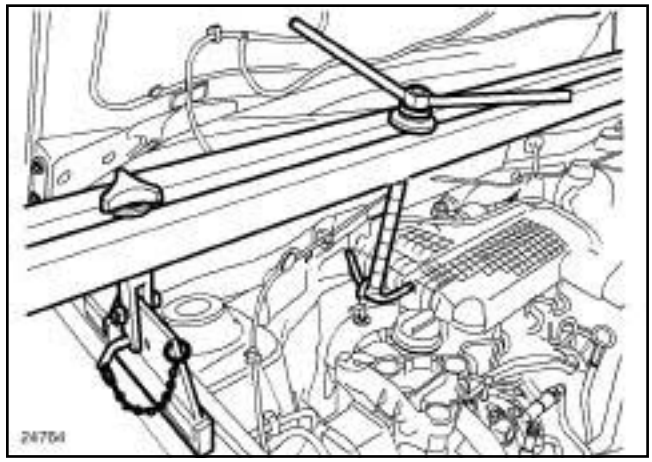

24764

❑ Fit the engine support tool **(Mot. 1453)** with the retaining belt, taking the timing end lifting eye as an anchoring point.

K9K, and 796

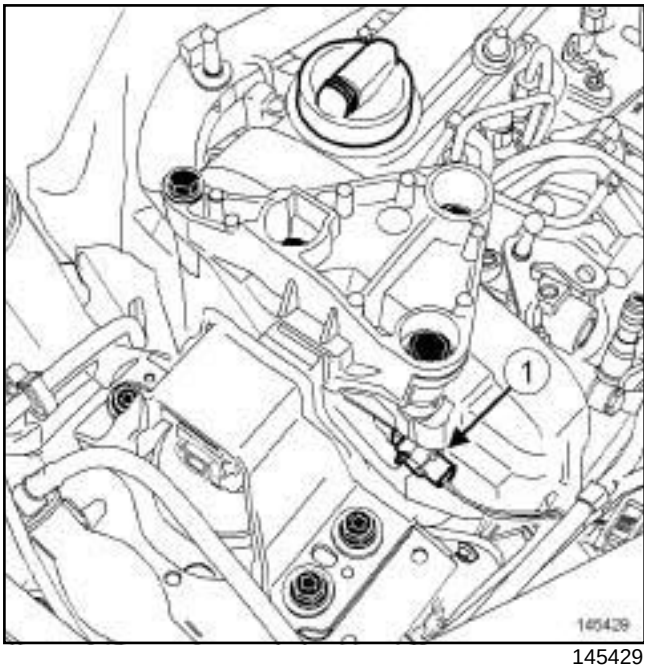

145429

❑ Mark the position of the suspended engine mounting in relation to the body.

❑ Remove:

- the right-hand suspended engine mounting (see **19D**, **Engine mounting**, **Right-hand suspended engine mounting: Removal - Refitting**, page **19D-4**) ,
- the camshaft position sensor (**1**) (see **13B**, **Diesel injection**, **Camshaft position sensor: Removal - Refitting**, page **13B-7**) ,
- the accessories belt (see **11A**, **Top and front of engine**, **Accessories belt: Removal - Refitting**, page **11A-2**) .

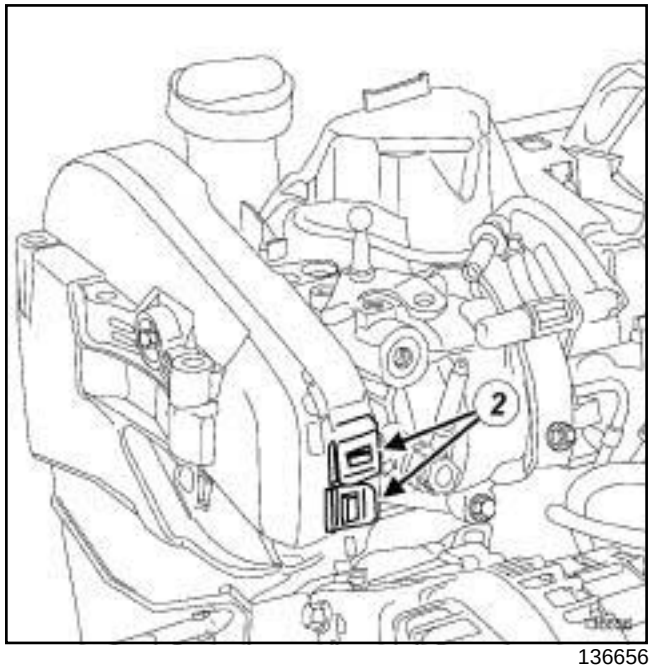

136656

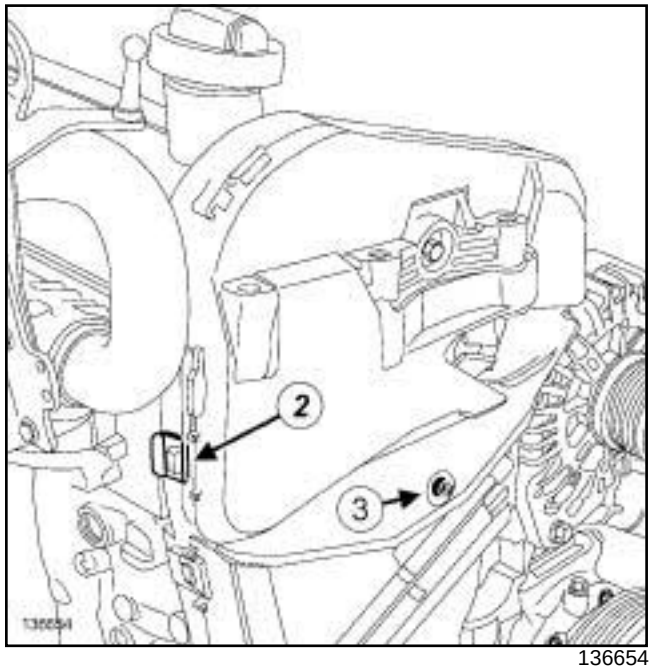

136654

❑ Remove:

- the bolt (**3**) from the upper timing cover,
- the upper timing cover by unclipping the three tabs (**2**) .

K9K, and 796

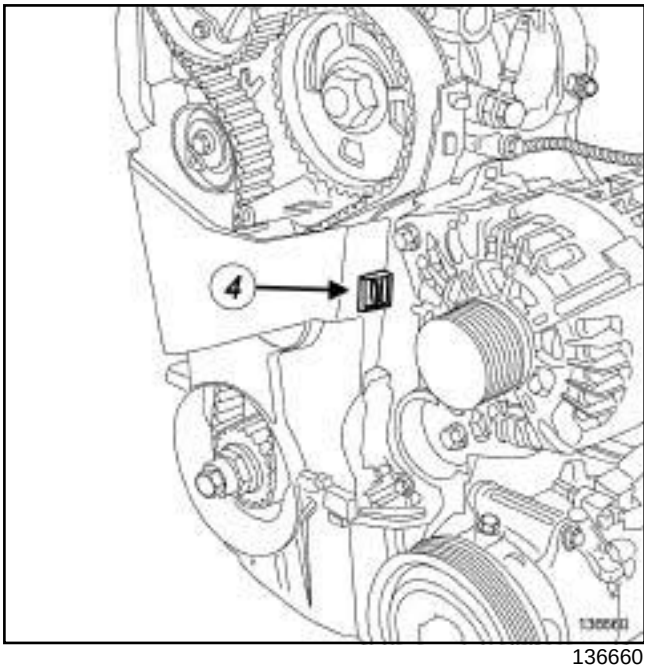

136660

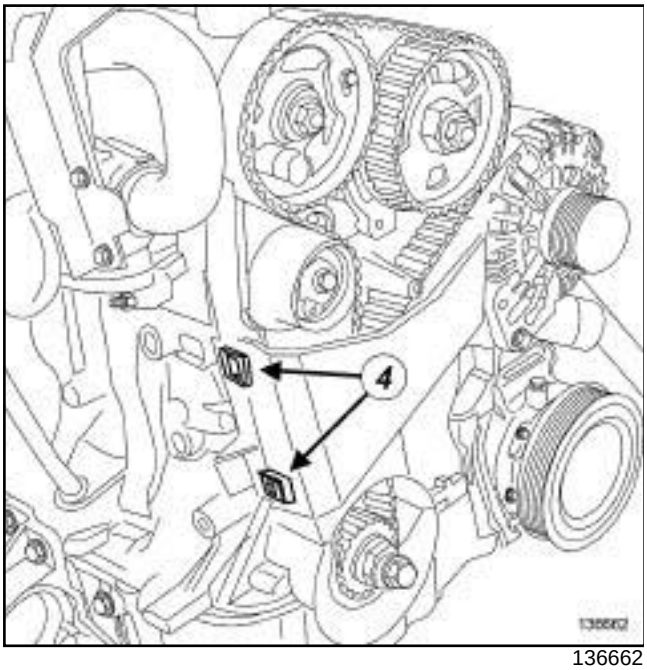

136662

❑ Unclip the three tabs (**4**) .

❑ Remove the lower timing cover.

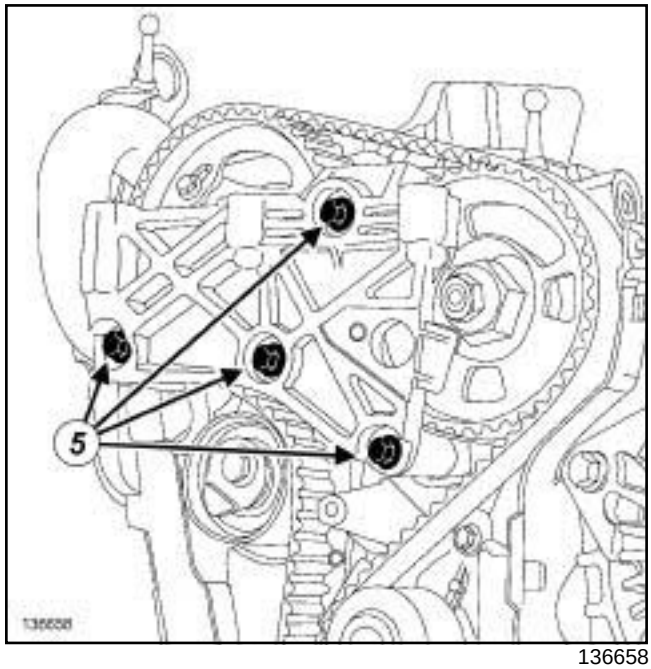

136658

❑ Remove:

- the bolts (**5**) from the right-hand suspended engine mounting support on the cylinder head,
- the right-hand pendulum suspension support.

II - REMOVAL OPERATION

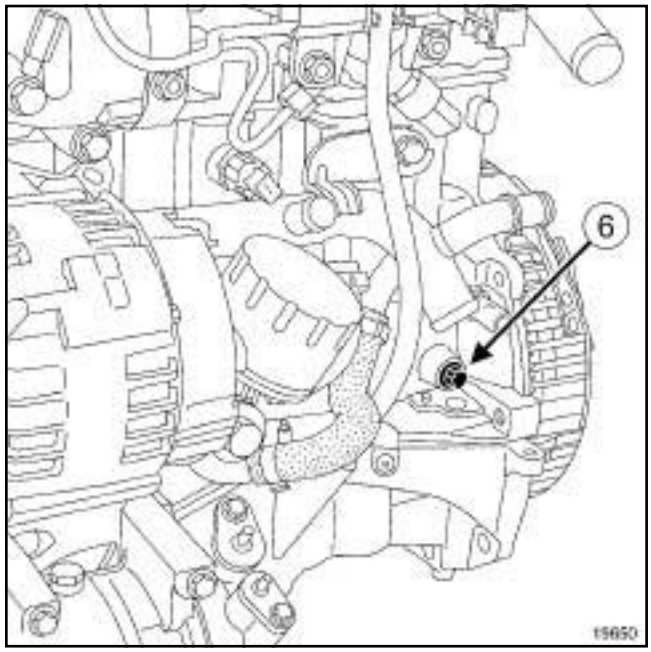

19650

❑ Remove the TDC pin plug (**6**) using a **14** female torx socket.

K9K, and 796

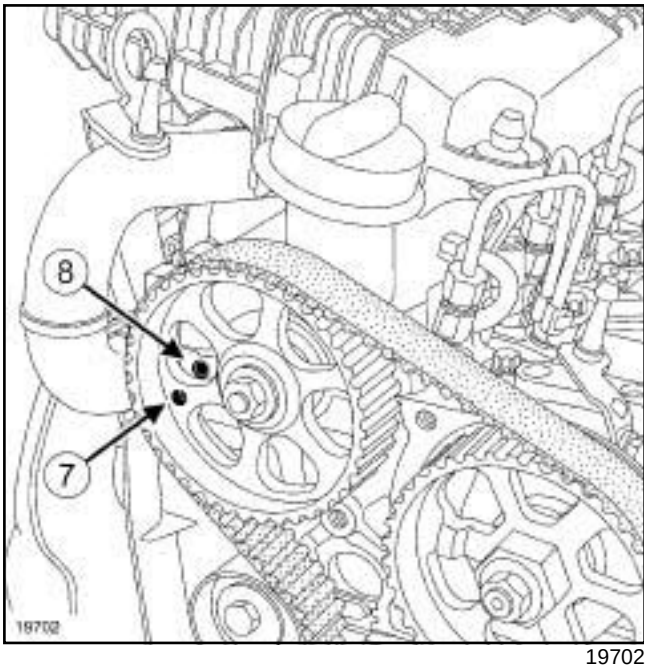

19702

❑ Turn the crankshaft to position the camshaft pulley hole (**7**) almost opposite the cylinder head hole (**8**) .

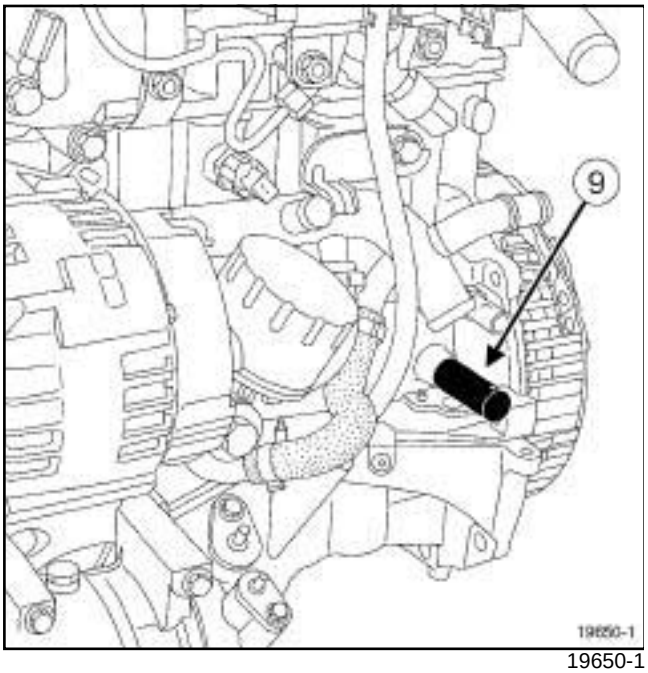

19650-1

❑ Screw tool **(Mot. 1489)** (**9**) into the cylinder block.

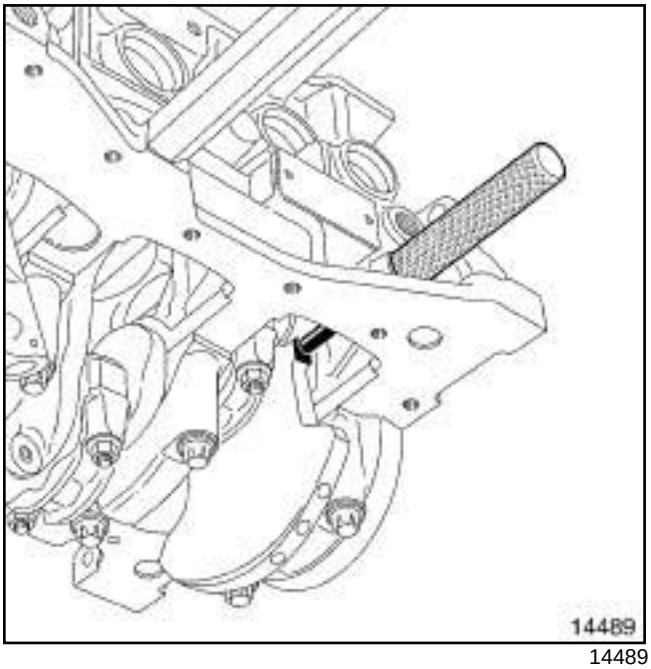

14489

❑ Turn the crankshaft clockwise (timing end) smoothly until the crankshaft is against the **(Mot. 1489)**.

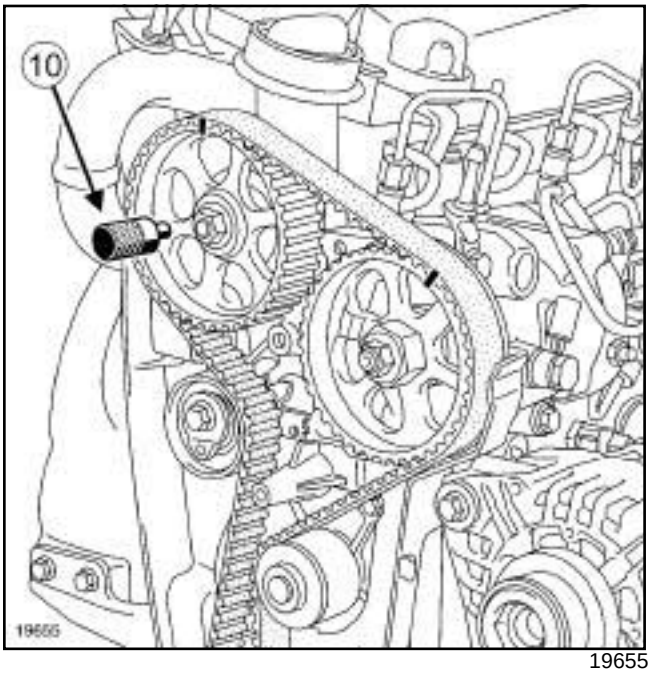

19655

❑ Insert the **(Mot. 1430)** (**10**) in the holes of the camshaft pulley and cylinder head.

❑ Remove:

- the **(Mot. 1430)**,
- the **(Mot. 1489)**.

K9K, and 796

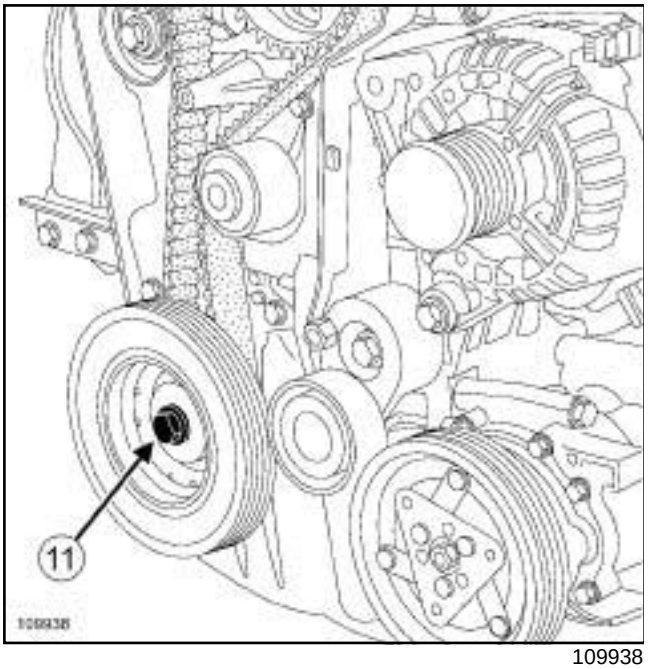

109938

❑ Remove:

- the bolt (**11**) from the crankshaft accessories pulley, locking the flywheel using a large screwdriver,
- the crankshaft accessories pulley.

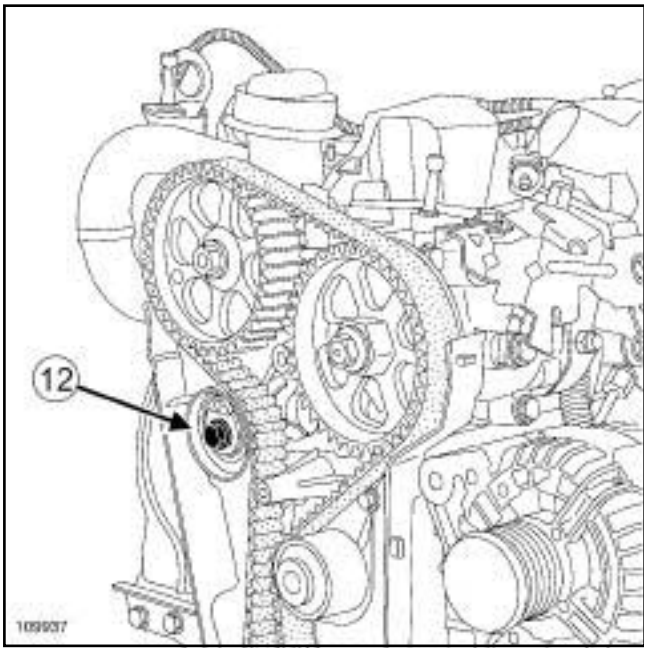

109937

❑ Undo the timing belt tensioning roller bolt (**12**) .

❑ Loosen the timing belt tensioning roller by turning the eccentric cam using a **6 mm** Allen key.

❑ Remove:

- the timing belt taking care not to let the crankshaft timing sprocket fall out.
- the timing belt tensioning roller.

REFITTING

I - REFITTING PREPARATION OPERATION

❑

WARNING
The belt must be replaced with a new one if it has been removed.

WARNING
When replacing the belt, always replace the tension wheels and idler pulleys.

WARNING

Always degrease:

- the end of the crankshaft (timing end),
- the timing sprocket pressure faces and bore of the crankshaft,
- the contact surfaces of the crankshaft accessories pulley.

This is to avoid timing slippage.

This slippage leads to engine damage.

II - PARTS AND CONSUMABLES FOR THE REPAIR

❑ **parts always to be replaced: Crankshaft accessories pulley bolts**,

❑ **parts always to be replaced: Timing belt tensioning roller**,

❑ **parts always to be replaced: Timing belt**.

K9K, and 796

III - REFITTING OPERATION

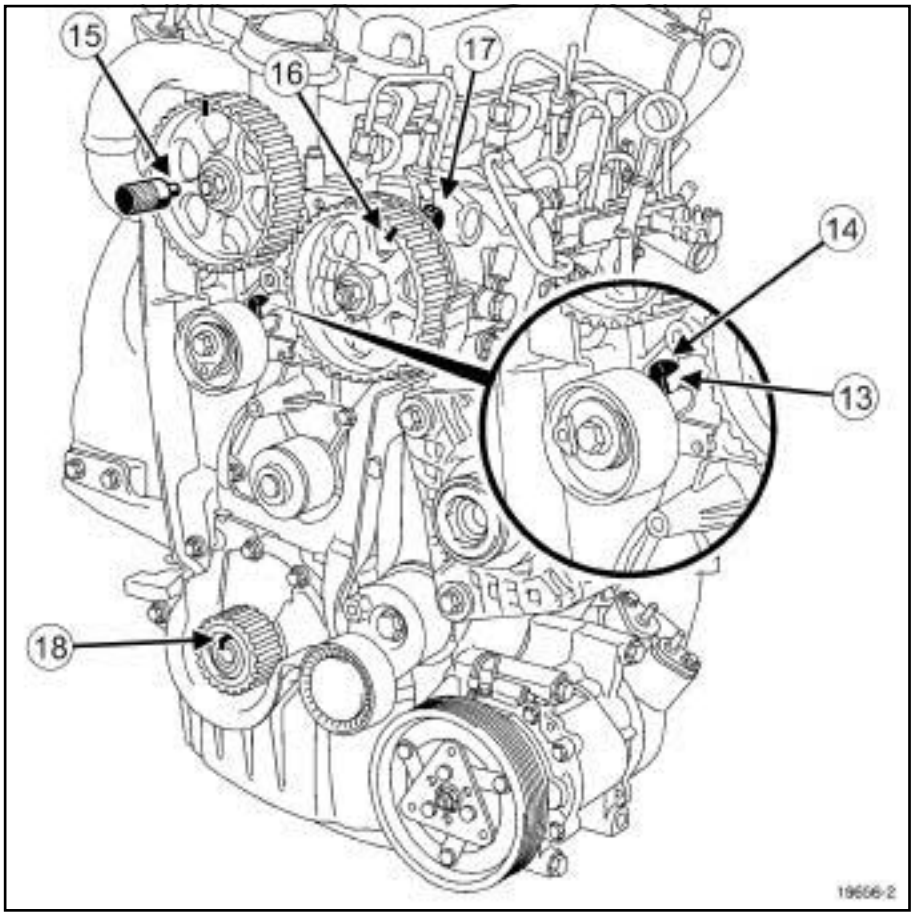

19656-2

- ❑ Refit:
  - the crankshaft timing sprocket,
  - a new timing belt tensioning roller.
- ❑ Put the tensioning roller lug (**13**) in the cylinder head groove (**14**) .
- ❑ Engage the **(Mot. 1430)** in the camshaft pulley hole and the cylinder head hole at (**15**) , turning the camshaft using an **18 mm** offset wrench if necessary.
- ❑ Check that high-pressure pump pulley marking (**16**) is opposite the bolt head (**17**) .

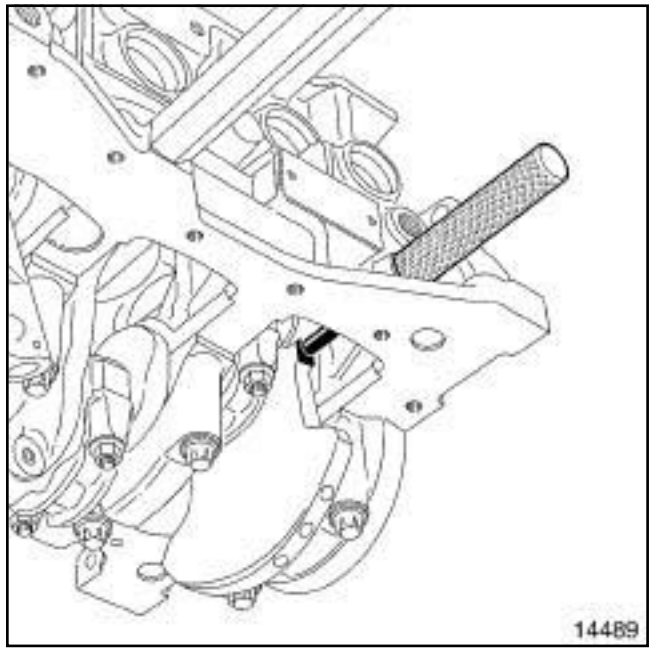

14489

- ❑ Refit the **(Mot. 1489)**.
- ❑ Place the crankshaft against the **(Mot. 1489)** (the crankshaft groove ***(18)*** must be upwards).

K9K, and 796

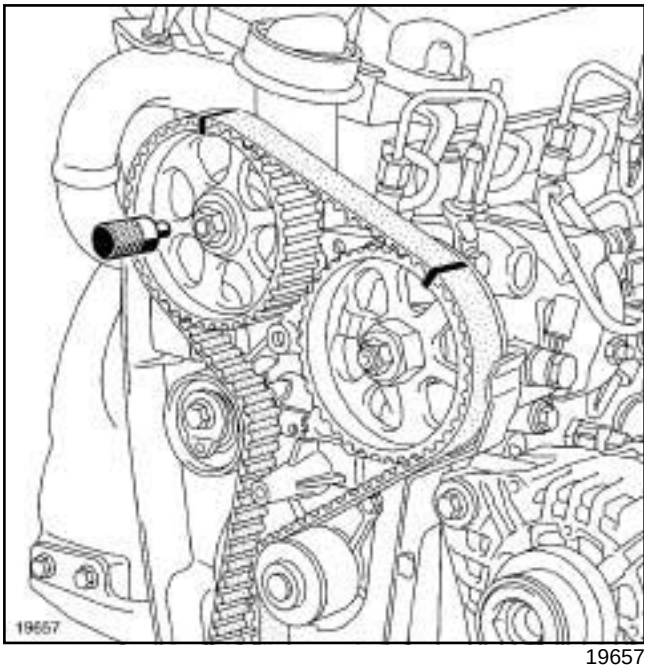

19657

- ❑ Fit the new timing belt, starting with the crankshaft sprocket, aligning the marks on the belt with those on the camshaft and high pressure pump pulleys.

> Note:
>
> There must be **19 timing belt tooth grooves** between the marks of the camshaft and high pressure pump pulleys and **51 timing belt tooth grooves** between the marks of the crankshaft timing sprocket and the high pressure pump pulley.

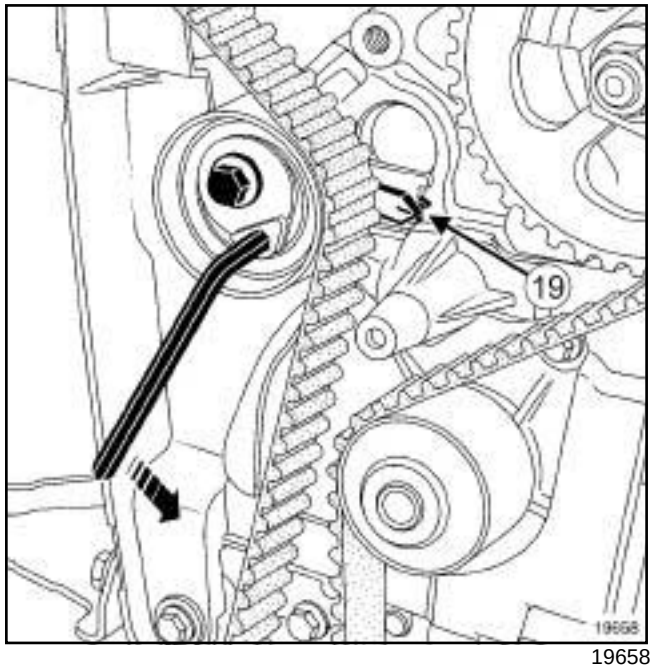

19658

- ❑ Position the timing belt tensioning roller adjustable index opposite the lug (**19**) by turning the eccentric cam anti-clockwise using a **6 mm** Allen key.
- ❑ Torque tighten the **timing belt tensioning roller bolt (27 N.m)**.
- ❑ Refit the accessories crankshaft pulley with a new bolt.
- ❑ Torque and angle tighten (crankshaft against the **(Mot. 1489)**) the **accessories pulley M14 bolt (120 N.m + 95° ± 15°)**.
- ❑ Remove:
  - the **(Mot. 1430)**,
  - the **(Mot. 1489)**.

K9K, and 796

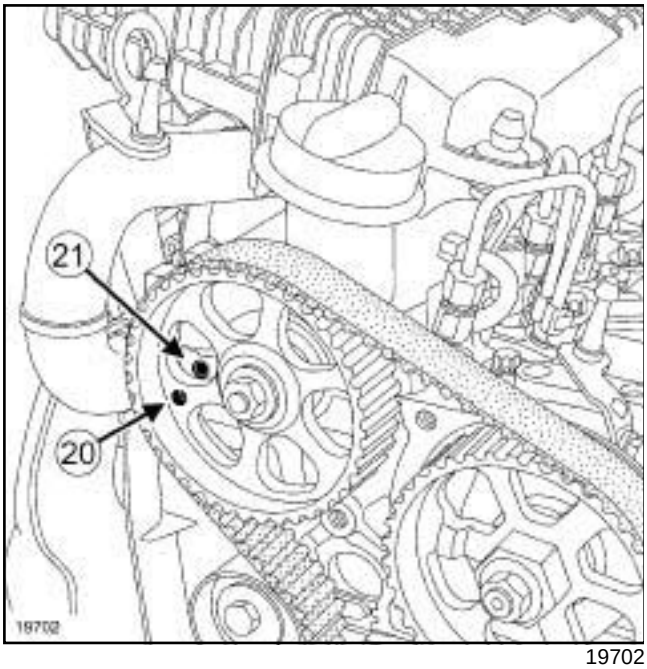

19702

- Rotate the crankshaft clockwise through two revolutions (timing end).
- Before the camshaft pulley hole (**20**) is opposite the cylinder head hole (**21**) , screw the **(Mot. 1489)** into the cylinder block.
- Bring the crankshaft slowly and smoothly into contact with the tool **(Mot. 1489)**.

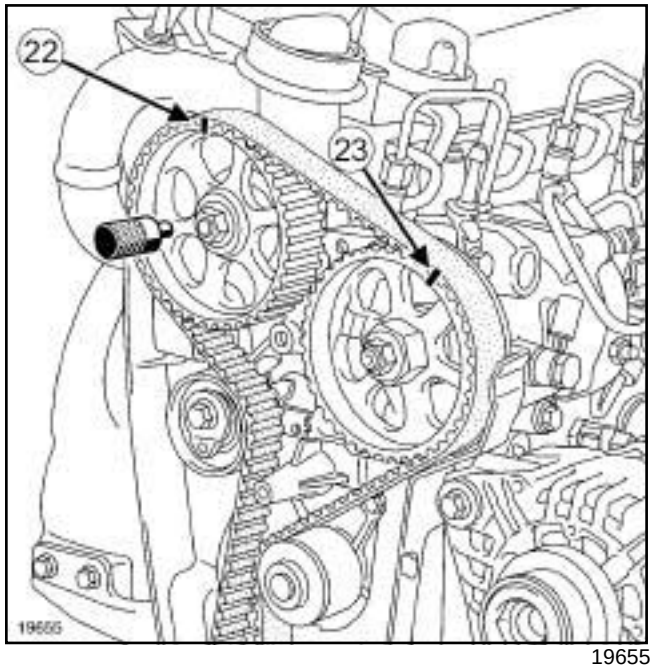

19655

- Set the camshaft pulley using the **(Mot. 1430)**.

> Note:
>
> There should be **19 belt tooth grooves** between the marks on the camshaft pulley (**22**) and the high pressure pump pulley (**23**) .

- Remove:
  - the **(Mot. 1489)**,
  - the **(Mot. 1430)**.

> Note:
>
> After rotating the crankshaft through two revolutions, the tensioning roller adjustable index may be in one of two positions.
>
> The rotation of the tension wheel eccentric depends on the position.

K9K, and 796

1 - First position

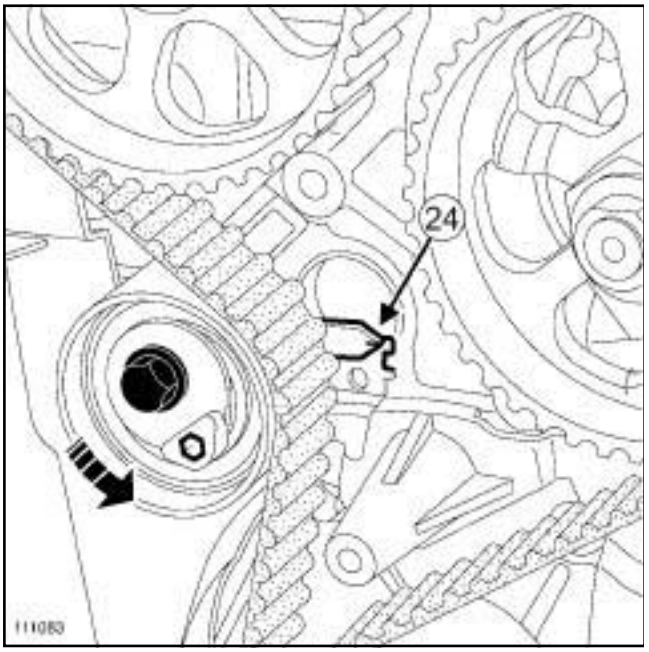

111083

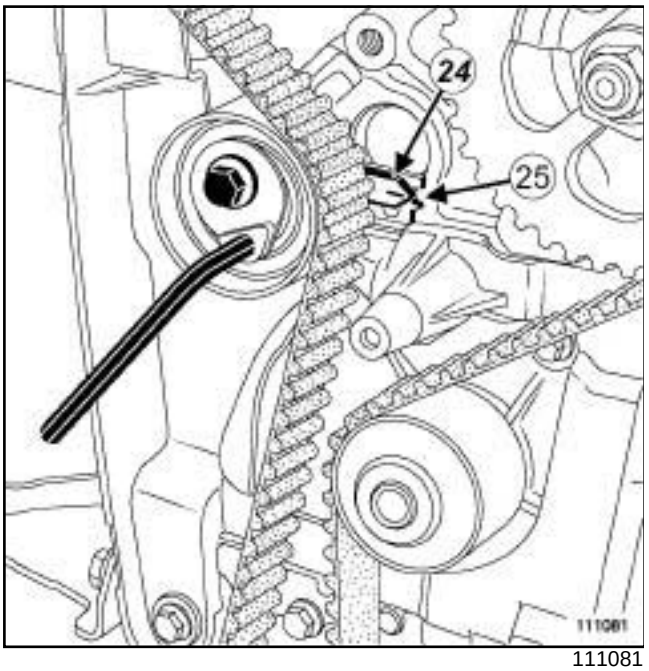

111081

- Loosen the tensioning roller bolt by no more than one turn, holding it with a **6 mmAllen key.**
- Gradually align the adjustable index marker (**24**) in the middle of the timing window (**25**) , turning the key anti-clockwise.

K9K, and 796

2 - Second position

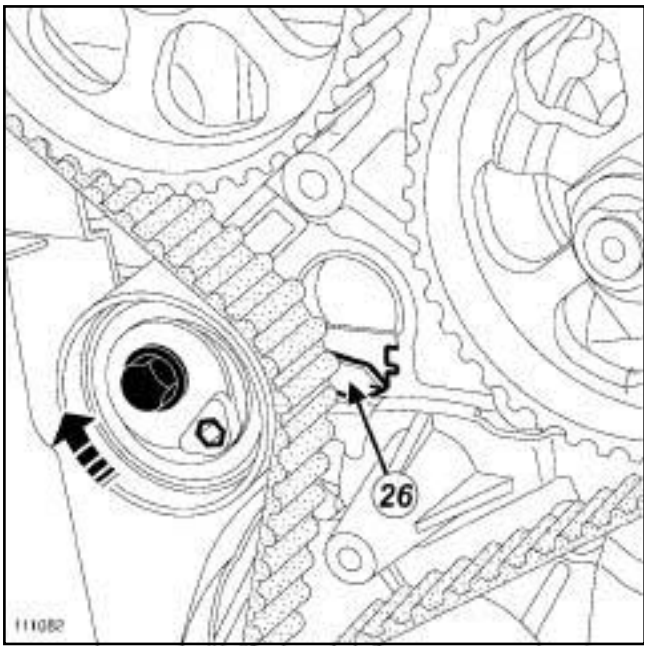

111082

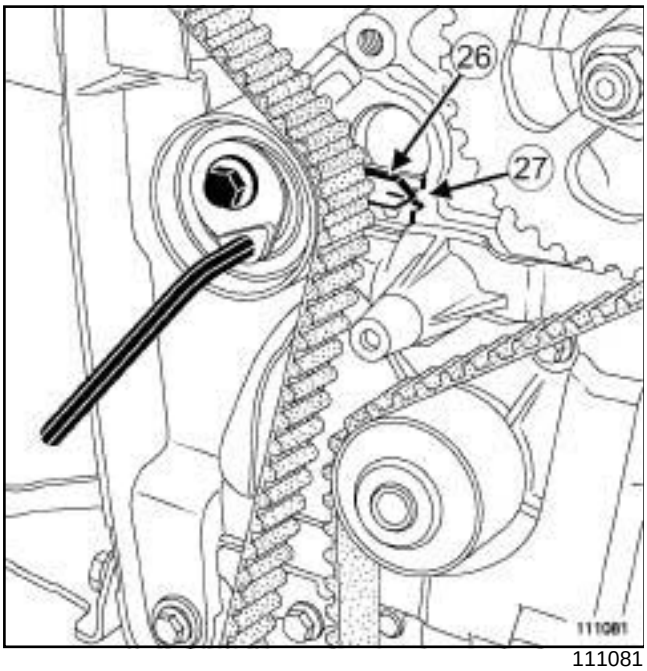

111081

- ❑ Loosen the tensioning roller bolt by one turn, holding it with a **6 mm** Allen key.
- ❑ Gradually align the adjustable index marker (**26**) in the middle of the timing window (**27**) , turning the key clockwise.
- ❑ Torque tighten the **timing belt tensioning roller bolt (27 N.m)**.
- ❑ Rotate the crankshaft clockwise through two revolutions (timing end).
- ❑ Before the camshaft pulley hole is opposite the cylinder head hole, screw the **(Mot. 1489)** into the cylinder block.
- ❑ Bring the crankshaft slowly and smoothly into contact with the tool **(Mot. 1489)**.

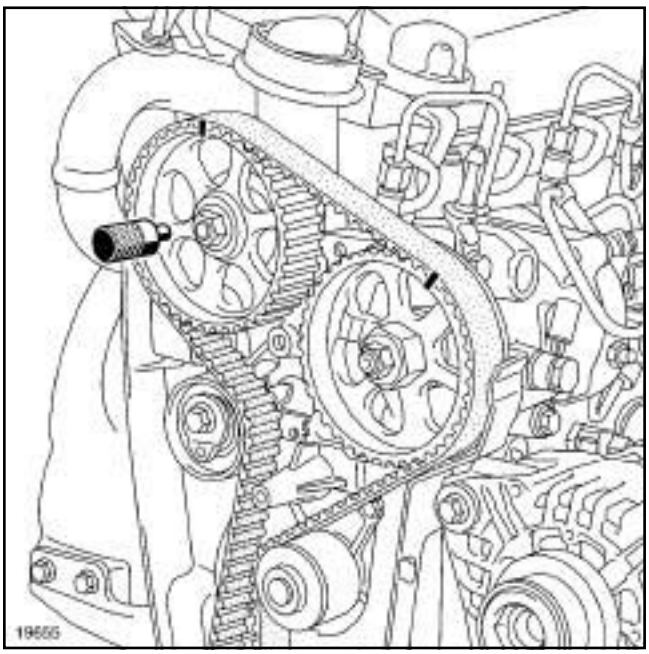

19655

- ❑ Set the camshaft pulley using the **(Mot. 1430)**.
- ❑ If the tool **(Mot. 1430)** does not engage, repeat the timing belt refitting operation.
- ❑ Remove:
  - the **(Mot. 1489)**,
  - the **(Mot. 1430)**.

IV - FINAL OPERATION

- ❑ Place a drop of **SILICONE ADHESIVE SEALANT** (see **Vehicle: Parts and consumables for the repair**) on the threading of the TDC pin plug.
- ❑ Torque tighten the **TDC pin plug (25 N.m)**.
- ❑ Refit the right-hand suspended engine mounting support on the cylinder head.
- ❑ Torque tighten the **right-hand suspended engine mounting bolts (25 N.m)**.

K9K, and 796

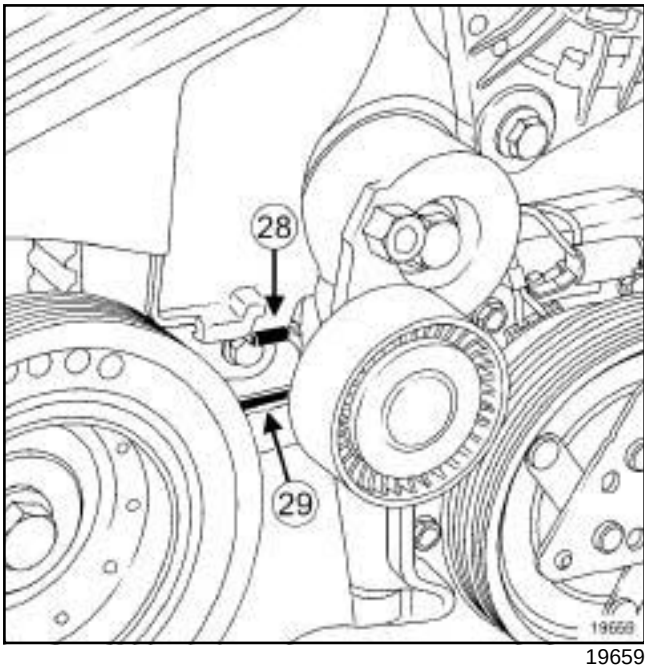

19659

- Refit the lower timing cover, positioning the tab (**28**) in the opening (**29**) on the inner cover.
- Clip on the lower timing cover.
- Refit:
  - the upper timing cover,
  - the upper timing cover bolt.
- Clip on the upper timing cover.
- Refit:
  - the camshaft position sensor (see **13B**, **Diesel injection**, **Camshaft position sensor: Removal - Refitting**, page **13B-7**) ,
  - the accessories belt (see **11A**, **Top and front of engine**, **Accessories belt: Removal - Refitting**, page **11A-2**) ,
  - the right-hand suspended engine mounting (see **19D**, **Engine mounting**, **Right-hand suspended engine mounting: Removal - Refitting**, page **19D-4**) , observing the marks made during removal.
- Remove the engine support tool **(Mot. 1453)**.
- Refit the front right-hand wheel (see **Wheel: Removal - Refitting**) (35A, Wheels and tyres).
- Connect the battery (see **Battery: Removal - Refitting**) (80A, Battery).

K4M

Tightening torques ▽	
rocker cover bolts 22, 23, 20 and 13	**8 N.m**
rocker cover bolts 1 to 12, 14 to 19, 21 to 24	**15 N.m**
rocker cover bolts 22, 23, 20 and 13	**15 N.m**
flywheel end lifting eye bolts on the rocker cover	**11 N.m**

REMOVAL

I - REMOVAL PREPARATION OPERATION

❑ Position the vehicle on a two-post lift (see **Vehicle: Towing and lifting**) (02A, Lifting equipment).

❑ Disconnect the battery (see **Battery: Removal - Refitting**) (80A, Battery).

❑ Remove:

- the front right-hand wheel (see **Wheel: Removal - Refitting**) (35A, Wheels and tyres),
- the accessories belt (see **11A**, **Top and front of engine**, **Accessories belt: Removal - Refitting**, page **11A-2**) ,
- the air resonator (see **12A**, **Fuel mixture**, **Air resonator: Removal - Refitting**, page **12A-2**) ,
- the timing belt (see **11A**, **Top and front of engine**, **Timing belt: Removal - Refitting**, page **11A-17**) ,
- the air filter unit (see **12A**, **Fuel mixture**, **Air filter unit: Removal - Refitting**, page **12A-6**) ,
- the throttle valve (see **12A**, **Fuel mixture**, **Throttle valve: Removal - Refitting**, page **12A-11**) ,
- the inlet distributor (see **12A**, **Fuel mixture**, **Inlet distributor: Removal - Refitting**, page **12A-12**) ,
- the timing end camshaft seals (see **11A**, **Top and front of engine**, **Camshaft seal, timing end: Removal - Refitting**, page **11A-56**) ,
- the ignition coils (see **17A**, **Ignition**, **Coils: Removal - Refitting**, page **17A-1**) ,
- the oil decanter (see **11A**, **Top and front of engine**, **Oil decanter: Removal - Refitting**, page **11A-68**) ,
- the flywheel end lifting eye on the rocker cover.

K4M

II - REMOVAL OPERATION

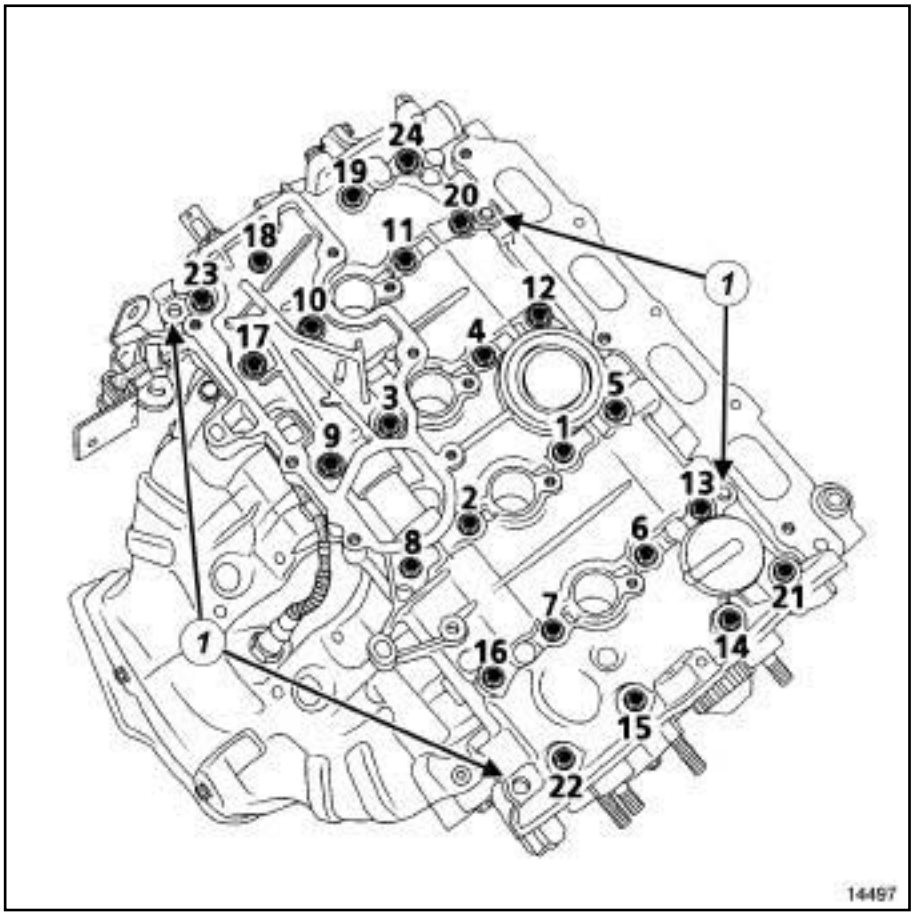

14497

- ❑ Remove the rocker cover bolts.
- ❑ Remove the rocker cover vertically by tapping the lugs (**1**) with a copper hammer.
- ❑ Remove the rocker cover.

K4M

REFITTING

I - REFITTING PREPARATION OPERATION

❑

IMPORTANT
Wear cut-resistant gloves during the operation.

IMPORTANT
Wear goggles with side protectors for this operation.

WARNING
Do not scrape the joint faces of the aluminium, any damage caused to the joint face will result in a risk of leaks.

WARNING
Do not allow this product to drip onto the paintwork.

Clean the cylinder head carefully to prevent foreign bodies from entering the oil supply and return galleries.

Failure to follow this advice could lead to the blocking of the various oil inlet galleries, which would quickly result in engine damage.

Note:
The gasket faces on the rocker cover must be clean, dry and free from grease (avoid finger marks).

❑ Clean the gasket face of the rocker cover and cylinder head with **SUPER CLEANING AGENT FOR JOINT FACES** (see **Vehicle: Parts and consumables for the repair**) (04B, Consumables - Products) to dissolve any pieces of seal that are still attached.

❑ Apply the product to the section to be cleaned.

❑ Wait approximately fifteen minutes, then remove any residue with a wooden spatula.

❑ Lubricate the cylinder head camshaft bearings with engine oil.

❑

WARNING
Applying excess sealant could cause it to be squeezed out when parts are tightened. A mixture of sealant and fluid could damage certain components (engine, radiator, etc.)

Note:
Do not put oil on the gasket face of the cylinder head cover.

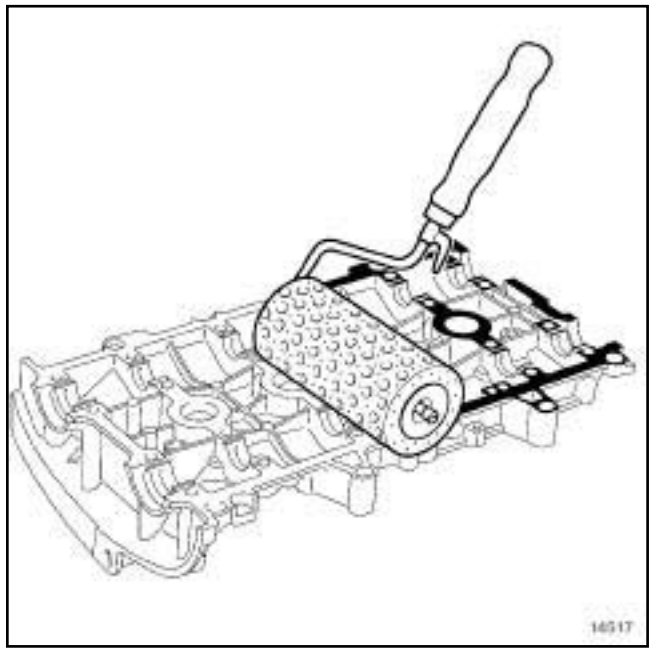

14517

❑ Using a stipple roller, apply **RESIN ADHESIVE** (see **Vehicle: Parts and consumables for the repair**) (04B, Consumables - Products) to the gasket face until it is well coated.

K4M

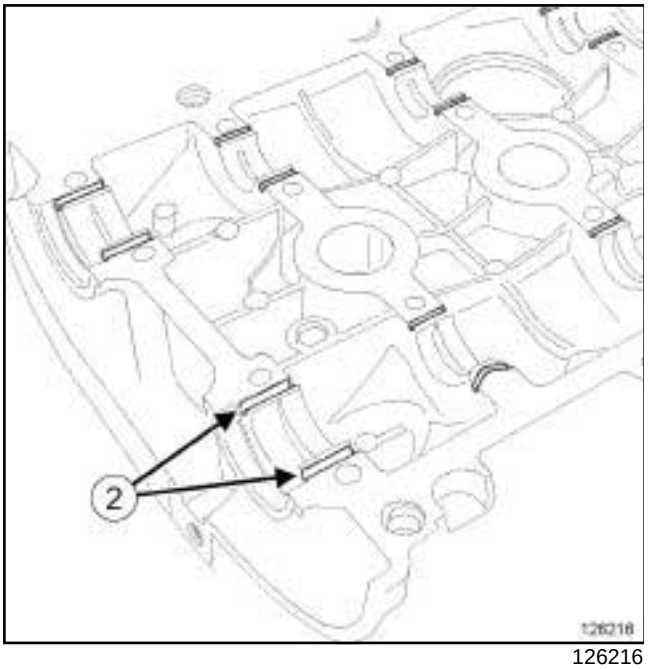

126216

❑ Use a cloth to remove any **RESIN GLUE** in the bearing channels (**2**) on the rocker cover.

K4M

II - REFITTING OPERATION

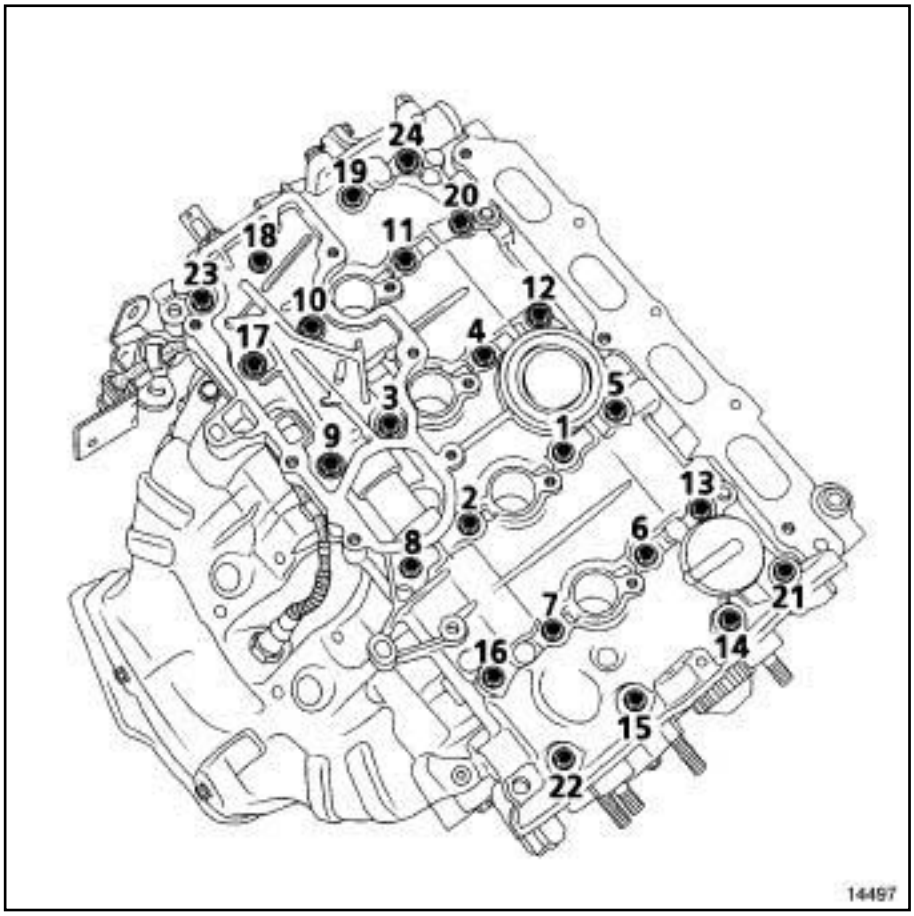

14497

- ❑ Refit the rocker cover.
- ❑ Tighten to torque and in order:
  - **rocker cover bolts 22, 23, 20 and 13 (8 N.m)**,
  - **rocker cover bolts 1 to 12, 14 to 19, 21 to 24 (15 N.m)**.
- ❑ Loosen bolts 22, 23, 20 and 13, in order.
- ❑ Torque tighten in order **rocker cover bolts 22, 23, 20 and 13 (15 N.m)**.

III - FINAL OPERATION

- ❑ Refit the flywheel end lifting eye.
- ❑ Torque tighten the **flywheel end lifting eye bolts on the rocker cover (11 N.m)**.
- ❑ Refit:
  - the oil decanter (see **11A**, **Top and front of engine**, **Oil decanter: Removal - Refitting**, page **11A-68**) ,
  - the ignition coils (see **17A**, **Ignition**, **Coils: Removal - Refitting**, page **17A-1**) ,
  - the camshaft seals (see **11A**, **Top and front of engine**, **Camshaft seal, timing end: Removal - Refitting**, page **11A-56**) ,
  - the inlet distributor (see **12A**, **Fuel mixture**, **Inlet distributor: Removal - Refitting**, page **12A-12**) ,
  - the throttle valve (see **12A**, **Fuel mixture**, **Throttle valve: Removal - Refitting**, page **12A-11**) ,
  - the air filter unit (see **12A**, **Fuel mixture**, **Air filter unit: Removal - Refitting**, page **12A-6**) ,
  - the timing belt (see **11A**, **Top and front of engine**, **Timing belt: Removal - Refitting**, page **11A-17**) ,
  - the air resonator (see **12A**, **Fuel mixture**, **Air resonator: Removal - Refitting**, page **12A-2**) ,
  - the accessories belt (see **11A**, **Top and front of engine**, **Accessories belt: Removal - Refitting**, page **11A-2**) ,
  - the front right-hand wheel (see **Wheel: Removal - Refitting**) (35A, Wheels and tyres).
- ❑ Connect the battery (see **Battery: Removal - Refitting**) (80A, Battery).

K9K

Tightening torques ▽	
rocker cover bolts	**12 N.m**

REMOVAL

I - REMOVAL PREPARATION OPERATION

❑ Remove the air filter unit (see **12A**, **Fuel mixture**, **Air filter unit: Removal - Refitting**, page **12A-6**) .

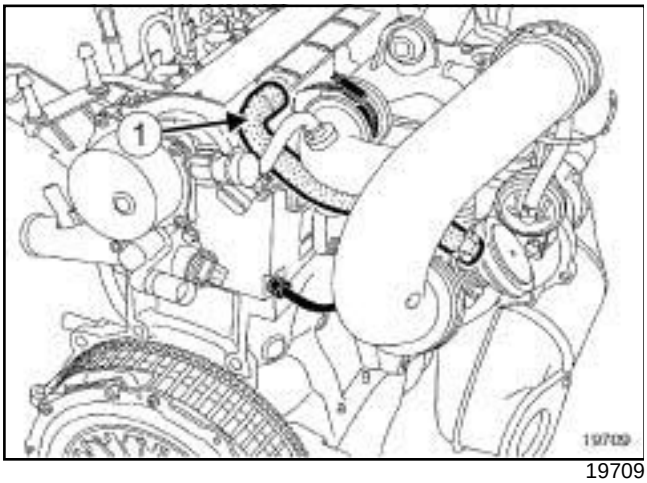

19709

❑ Remove the oil vapour rebreathing hose (**1**) .

II - REMOVAL OPERATION

❑ Remove:

- the rocker cover bolts,
- the rocker cover,
- the rocker cover seal.

REFITTING

I - REFITTING PREPARATION OPERATION

❑ Clean the cylinder head joint face using **GREY ABRASIVE PADS** (see **Vehicle: Parts and consumables for the repair**) (04B, Consumables - Products).

❑ Use **SURFACE CLEANER** (see **Vehicle: Parts and consumables for the repair**) (04B, Consumables - Products) to degrease:

- the cylinder head joint face,
- the housing of the rocker cover seal, if reusing.

❑ **parts always to be replaced: rocker cover seal**.

II - REFITTING OPERATION

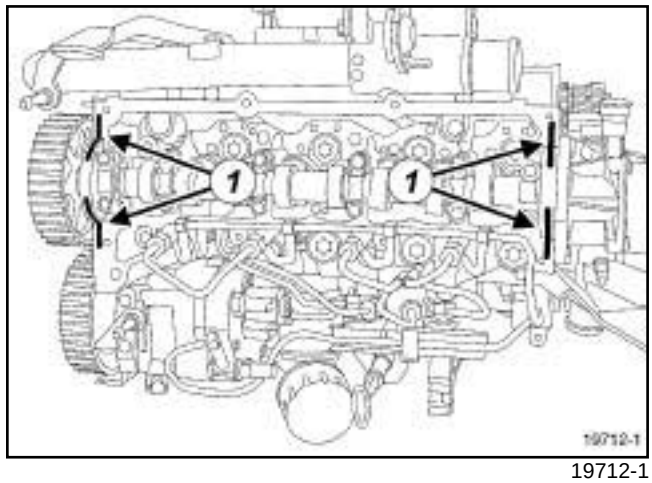

19712-1

❑

> **WARNING**
> Applying excess sealant could cause it to be squeezed out when parts are tightened. A mixture of sealant and fluid could damage certain components (engine, radiator, etc.).

❑ Deposit four beads (**1**) of **SILICONE ADHESIVE SEALANT** that are **2 mm** in diameter and **10 mm** long.

❑ Refit:

- the rocker cover,
- the rocker cover bolts.

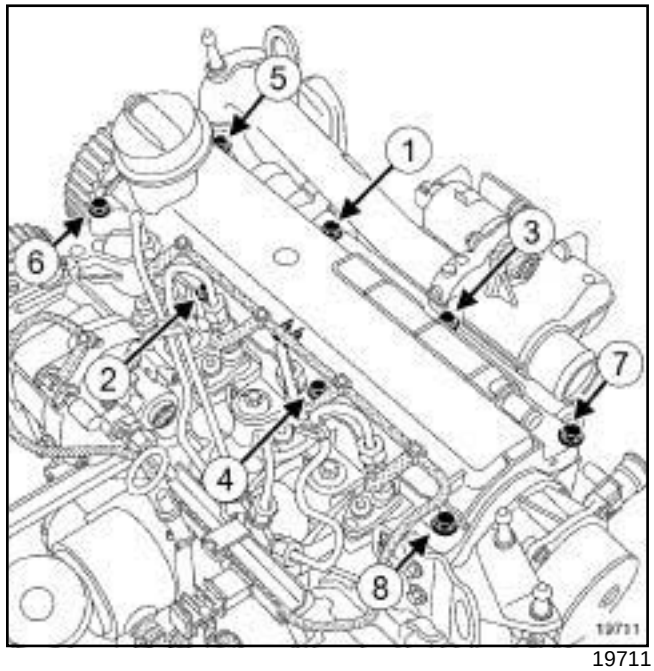

19711

❑ Torque tighten in order the **rocker cover bolts (12 N.m)**.

K9K

III - FINAL OPERATION

- ❑ Connect the oil vapour rebreathing pipe.
- ❑ Refit the air filter unit (see **12A**, **Fuel mixture**, **Air filter unit: Removal - Refitting**, page **12A-6**) .

K4M

Equipment required
roller-type stud removal tool

Tightening torques ▽	
the camshaft dowel	**8 N.m**

REMOVAL

I - REMOVAL PREPARATION OPERATION

❏ Position the vehicle on a two-post lift (see **Vehicle: Towing and lifting**) (02A, Lifting equipment).

❏ Disconnect the battery (see **Battery: Removal - Refitting**) (80A, Battery).

❏ Remove:

- the front right-hand wheel (see **Wheel: Removal - Refitting**) (35A, Wheels and tyres),
- the accessories belt (see **11A**, **Top and front of engine**, **Accessories belt: Removal - Refitting**, page **11A-2**) ,
- the right-hand suspended engine mounting (see **19D**, **Engine mounting**, **Right-hand suspended engine mounting: Removal - Refitting**, page **19D-4**) ,
- the air resonator (see **12A**, **Fuel mixture**, **Air resonator: Removal - Refitting**, page **12A-2**) ,
- the timing belt (see **11A**, **Top and front of engine**, **Timing belt: Removal - Refitting**, page **11A-17**) ,
- the air filter unit (see **12A**, **Fuel mixture**, **Air filter unit: Removal - Refitting**, page **12A-6**) ,
- the throttle valve (see **12A**, **Fuel mixture**, **Throttle valve: Removal - Refitting**, page **12A-11**) ,
- the inlet distributor (see **12A**, **Fuel mixture**, **Inlet distributor: Removal - Refitting**, page **12A-12**) ,
- the ignition coils (see **17A**, **Ignition**, **Coils: Removal - Refitting**, page **17A-1**) ,
- the rocker cover (see **11A**, **Top and front of engine**, **Rocker cover: Removal - Refitting**, page **11A-42**) ,
- the timing end camshaft seals (see **11A**, **Top and front of engine**, **Camshaft seal, timing end: Removal - Refitting**, page **11A-56**) .

K4M

II - REMOVAL OPERATION

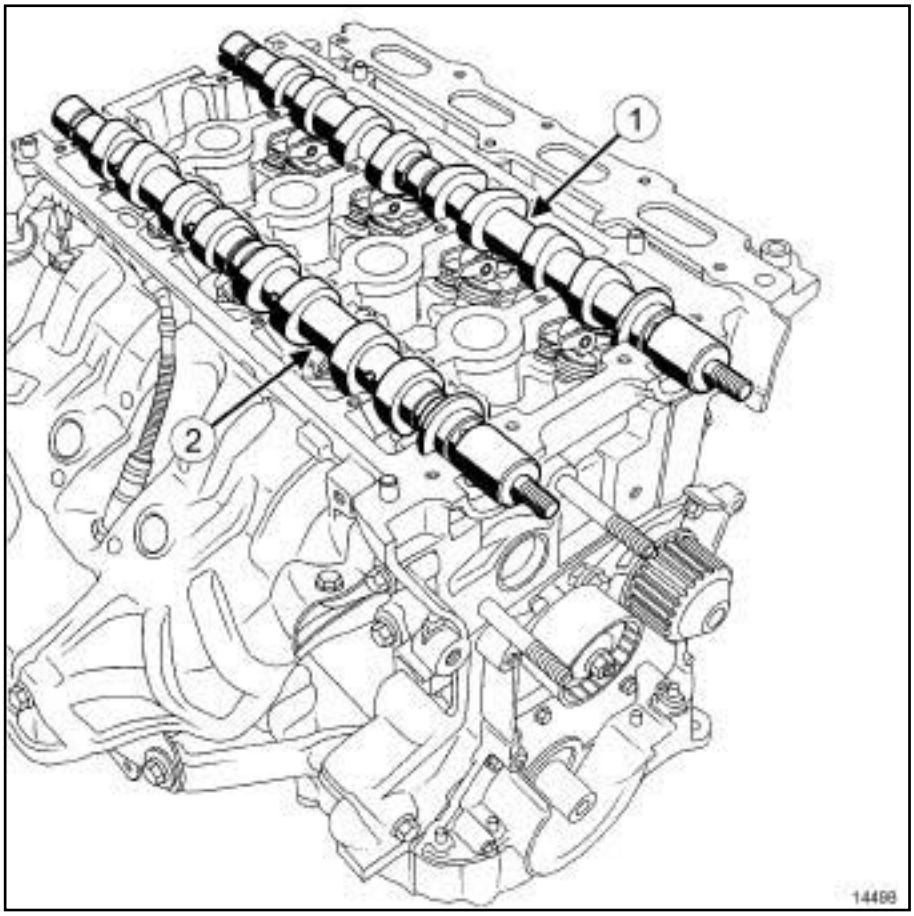

14498

❑ Remove:

- the inlet camshaft (**1**) ,
- the exhaust camshaft (**2**) .

K4M

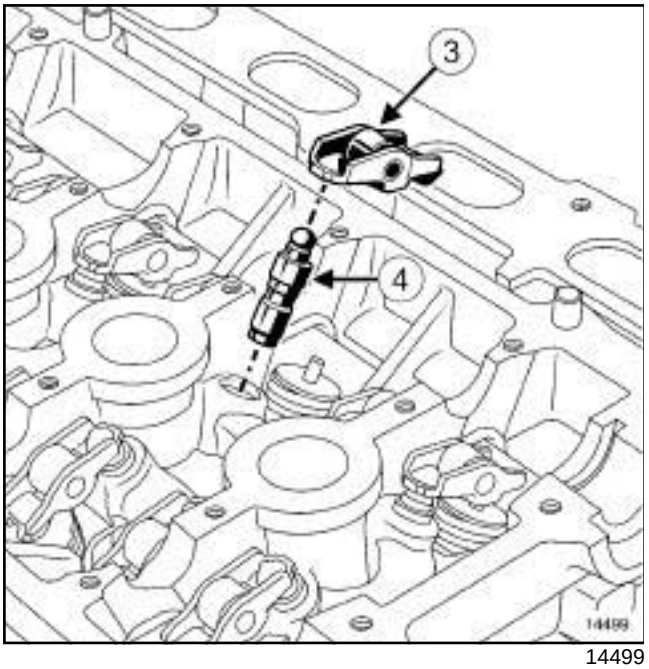

14499

❑ Remove:

- the valve rockers (**3**) ;
- the hydraulic tappets (**4**) .

> Note:
>
> To prevent any risk of unpriming the hydraulic tappets make sure that they are vertical.

REFITTING

I - REFITTING PREPARATION OPERATION

❑ Refit the camshafts while positioning them correctly (see) (Technical Note 6023A, 10A, Engine and peripherals).

> Note:
>
> It is essential to reprime the hydraulic tappets as these may become drained if removed for a long time.

❑ To check if re-priming is necessary, press the top of the tappet with your thumb. If the tappet piston depresses, immerse the tappets in a container full of diesel then reprime them.

Replacing a camshaft dowel

❑

> Note:
>
> It is essential to replace the camshaft dowel if it comes loose at the same time as the nut.

a - Removal

❑ Place the camshaft in a vice with **aluminium jaws**.

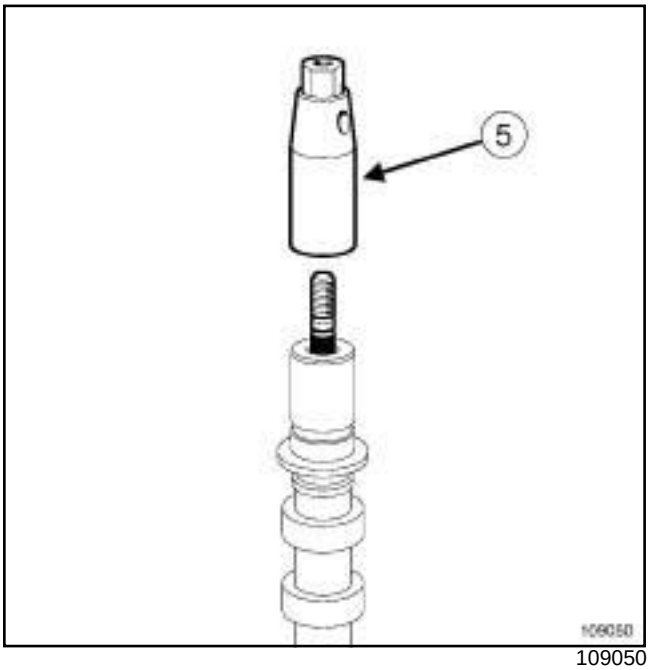

109050

❑ Remove the dowel using a **roller-type stud removal tool** (**5**) .

b - Cleaning the camshaft

❑

> Note:
>
> Clean the thread hole of the camshaft carefully to prevent foreign bodies from entering the latter.
>
> Failure to follow this advice could lead to the blocking of the oil inlet holes, which would quickly result in engine damage.

c - Refitting

❑ Place the camshaft in a vice with **aluminium jaws**.

K4M

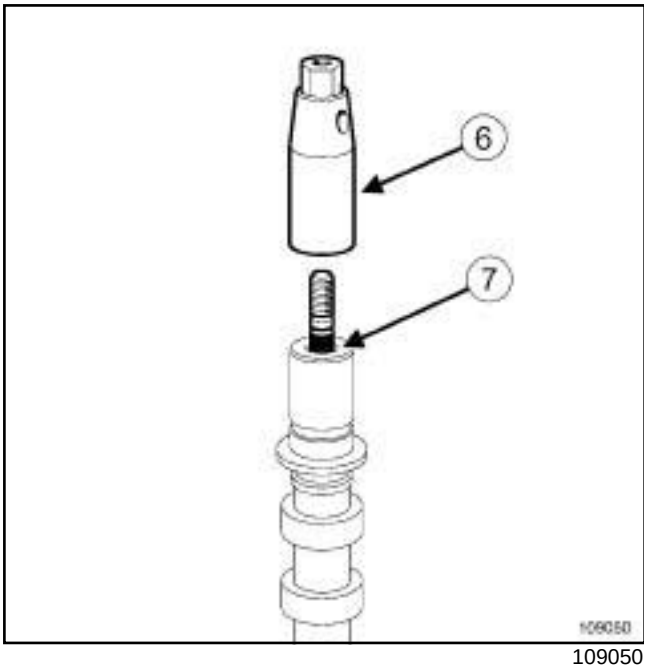

109050

❑ Refit the new camshaft dowel (precoated section (**7**) on the camshaft side).

❑ Torque tighten **the camshaft dowel (8 N.m)** using a **roller-type stud removal tool** (**6**) .

II - REFITTING OPERATION

❑ Refit:

- the hydraulic tappets,
- the valve rockers,
- the inlet camshaft, by lubricating the inlet camshaft bearings,
- the exhaust camshaft, by lubricating the exhaust camshaft bearings.

III - FINAL OPERATION

❑ Refit:

- the rocker cover (see **11A**, **Top and front of engine**, **Rocker cover: Removal - Refitting**, page **11A-42**) ,
- the camshaft seals (see **11A**, **Top and front of engine**, **Camshaft seal, timing end: Removal - Refitting**, page **11A-56**) ,
- the ignition coils (see **17A**, **Ignition**, **Coils: Removal - Refitting**, page **17A-1**) ,
- the inlet distributor (see **12A**, **Fuel mixture**, **Inlet distributor: Removal - Refitting**, page **12A-12**) ,
- the throttle valve (see **12A**, **Fuel mixture**, **Throttle valve: Removal - Refitting**, page **12A-11**) ,
- the air filter unit (see **12A**, **Fuel mixture**, **Air filter unit: Removal - Refitting**, page **12A-6**) ,
- the timing belt (see **11A**, **Top and front of engine**, **Timing belt: Removal - Refitting**, page **11A-17**) ,
- the air resonator (see **12A**, **Fuel mixture**, **Air resonator: Removal - Refitting**, page **12A-2**) ,
- the right-hand suspended engine mounting (see **19D**, **Engine mounting**, **Right-hand suspended engine mounting: Removal - Refitting**, page **19D-4**) ,
- the accessories belt (see **11A**, **Top and front of engine**, **Accessories belt: Removal - Refitting**, page **11A-2**) ,
- the front right-hand wheel (see **Wheel: Removal - Refitting**) (35A, Wheels and tyres).

❑ Connect the battery (see **Battery: Removal - Refitting**) (80A, Battery).

K9K

Tightening torques ▽	
bolts of the camshaft bearings	**10 N.m**

REMOVAL

I - REMOVAL PREPARATION OPERATION

❏ Position the vehicle on a two-post lift (see **Vehicle: Towing and lifting**) (02A, Lifting equipment).

❏ Disconnect the battery (see **Battery: Removal - Refitting**) (80A, Battery).

❏ Remove:

- the air filter box (see **12A**, **Fuel mixture**, **Air filter unit: Removal - Refitting**, page **12A-6**) ,
- the front right-hand wheel (see **Wheel: Removal - Refitting**) (35A, Wheels and tyres),
- the front right-hand wheel arch liner partially (see **Front wheel arch liner: Removal - Refitting**) (55A, Exterior protection),
- the engine undertray bolts,
- the engine undertray,
- the accessories belt (see **11A**, **Top and front of engine**, **Accessories belt: Removal - Refitting**, page **11A-2**) ,
- the right-hand suspended engine mounting (see **19D**, **Engine mounting**, **Right-hand suspended engine mounting: Removal - Refitting**, page **19D-4**) ,
- the camshaft position sensor (see **13B**, **Diesel injection**, **Camshaft position sensor: Removal - Refitting**, page **13B-7**) ,
- the crankshaft accessories pulley (see **11A**, **Top and front of engine**, **Crankshaft accessories pulley: Removal - Refitting**, page **11A-10**) ,
- the timing belt (see **11A**, **Top and front of engine**, **Timing belt: Removal - Refitting**, page **11A-17**) ,
- the vacuum pump (see **Vacuum pump: Removal - Refitting**) (37A, Mechanical component controls),
- the rocker cover (see **11A**, **Top and front of engine**, **Rocker cover: Removal - Refitting**, page **11A-42**) .

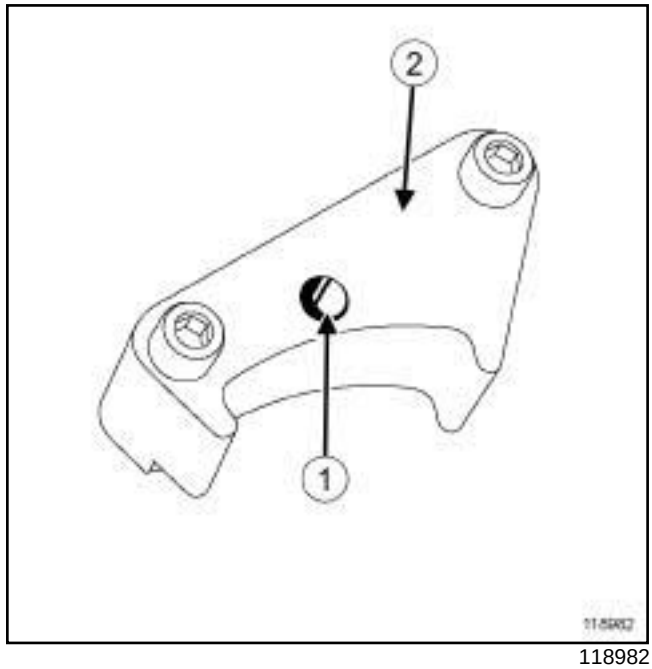

118982

❏ Increase the hole (**1**) of the (**2**) using an **8.5 mm** drill bit.

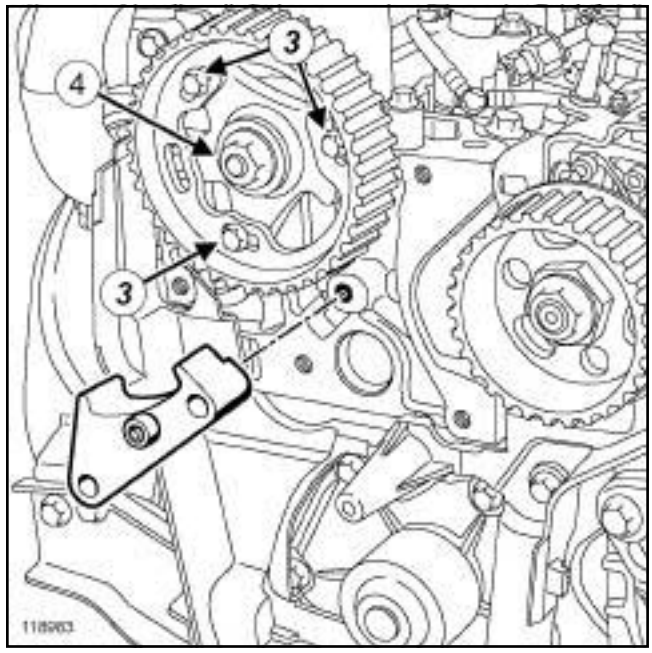

118983

❏ Undo the camshaft pulley hub bolts (**3**) .

❏ Fit theon the cylinder head to lock the camshaft pulley wheel.

❏ Tighten the camshaft pulley hub bolts ***(3)*** .

❏ Remove:

- the nut ***(4)*** from the camshaft pulley,
- the,
- the camshaft pulley.

K9K

II - OPERATION FOR REMOVAL OF PART CONCERNED

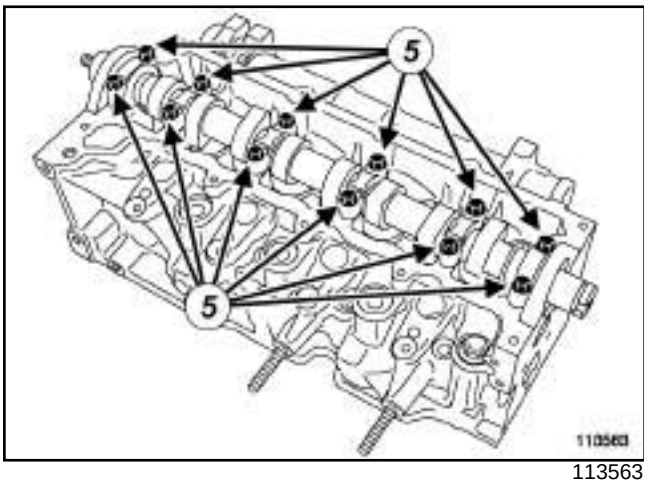

113563

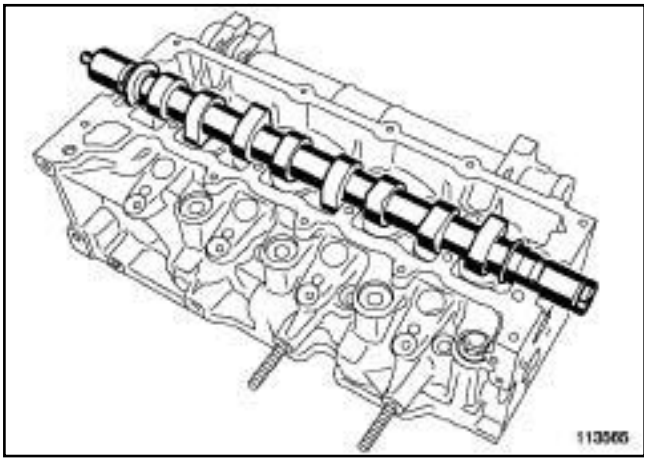
113565

- Mark the position of the camshaft bearings.
- Remove:
  - the camshaft bearing bolts ***(5)*** ,
  - the camshaft bearings,
  - the camshaft,
  - the timing end camshaft seal.

REFITTING

I - REFITTING PREPARATION OPERATION

- **parts always to be replaced: Camshaft seal on timing end**.

> **WARNING**
> To ensure proper sealing, the gasket surfaces must be clean, dry and not greasy (avoid any finger marks).

> **WARNING**
> Do not scrape the joint faces of the aluminium, any damage caused to the joint face will result in a risk of leaks.

- Use **GREY ABRASIVE PADS** (see **Vehicle: Parts and consumables for the repair**) (04B, Consumables - Products) to clean the bearing faces of the camshaft bearings.
- Use **SURFACE CLEANER** (see **Vehicle: Parts and consumables for the repair**) (04B, Consumables - Products) to clean and degrease:
  - the bearing faces of the camshaft bearings on the cylinder head,
  - the bearing faces of the camshaft bearings on the camshaft bearings.

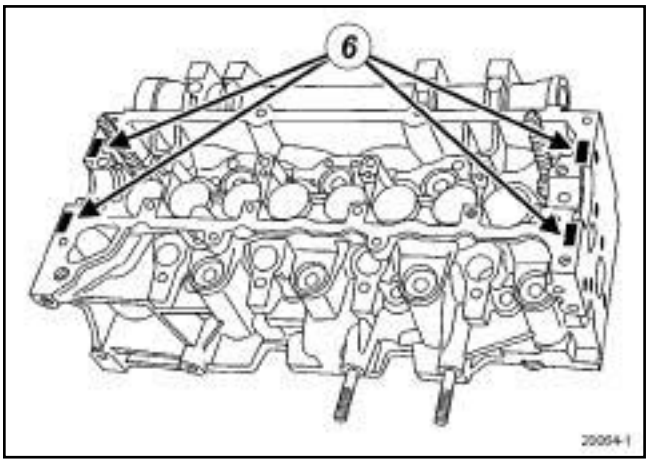

20064-1

-

> **WARNING**
> Applying excess sealant could cause it to be squeezed out when parts are tightened. A mixture of sealant and fluid could damage certain components (engine, radiator, etc.).

❑ Apply four beads (**6**) of **RESIN ADHESIVE** (see **Vehicle: Parts and consumables for the repair**) (04B, Consumables - Products) **7 mm** in diameter on the cylinder head.

II - REFITTING OPERATION FOR PART CONCERNED

❑ Fit the camshaft in place by placing the camshaft groove on the timing end vertically and facing upwards.

❑ Refit the camshaft bearings, observing their original positions (bearing **No. 1** at the flywheel end).

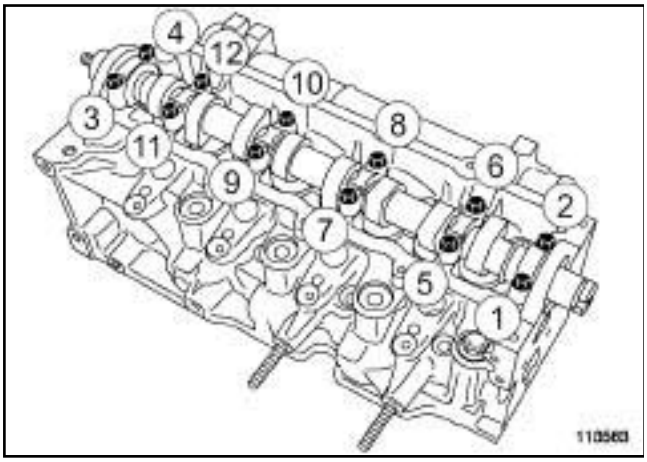

113563

❑ Refit the camshaft bearing bolts (**1**) , (**3**) , (**4**) and (**2**) in order.

❑ Tighten the camshaft bearing bolts ***(1)*** , ***(3)*** , ***(4)*** and ***(2)*** in order.

❑ Refit the camshaft bearing bolts in order.

❑ Tighten to torque and in order the **bolts of the camshaft bearings (10 N.m)**.

❑ Check and adjust (if necessary) the valve clearance (see **Valves: Adjustment**) .

III - FINAL OPERATION

❑ Refit:

- the camshaft seal (see **11A**, **Top and front of engine**, **Camshaft seal, timing end: Removal - Refitting**, page **11A-56**) ,
- the rocker cover (see **11A**, **Top and front of engine**, **Rocker cover: Removal - Refitting**, page **11A-42**) ,
- the vacuum pump (see **Vacuum pump: Removal - Refitting**) (37A, Mechanical component controls),
- the timing belt (see **11A**, **Top and front of engine**, **Timing belt: Removal - Refitting**, page **11A-17**) ,
- the crankshaft accessories pulley (see **11A**, **Top and front of engine**, **Crankshaft accessories pulley: Removal - Refitting**, page **11A-10**) ,
- the camshaft position sensor (see **13B**, **Diesel injection**, **Camshaft position sensor: Removal - Refitting**, page **13B-7**) ,
- the right-hand suspended engine mounting (see **19D**, **Engine mounting**, **Right-hand suspended engine mounting: Removal - Refitting**, page **19D-4**) ,
- the accessories belt (see **11A**, **Top and front of engine**, **Accessories belt: Removal - Refitting**, page **11A-2**) ,
- the engine undertray,
- the front right-hand wheel arch liner (see **Front wheel arch liner: Removal - Refitting**) (55A, Exterior protection),
- the front right-hand wheel (see **Wheel: Removal - Refitting**) (35A, Wheels and tyres),
- the air filter box (see **12A**, **Fuel mixture**, **Air filter unit: Removal - Refitting**, page **12A-6**) .

❑ Connect the battery (see **Battery: Removal - Refitting**) (80A, Battery).

K4M

Tightening torques ▽	
inlet camshaft hub nut	**30 N.m + 84° ± 4°**
exhaust camshaft hub nut	**30 N.m + 84° ± 4°**

REMOVAL

I - REMOVAL PREPARATION OPERATION

❑ Position the vehicle on a two-post lift (see **Vehicle: Towing and lifting**) (02A, Lifting equipment).

❑ Disconnect the battery (see **Battery: Removal - Refitting**) (80A, Battery).

❑ Remove:

- the front right-hand wheel (see **Wheel: Removal - Refitting**) (35A, Wheels and tyres),
- the air filter unit (see **12A**, **Fuel mixture**, **Air filter unit: Removal - Refitting**, page **12A-6**) ,
- the throttle valve (see **12A**, **Fuel mixture**, **Throttle valve: Removal - Refitting**, page **12A-11**) ,
- the air inlet distributor (see **12A**, **Fuel mixture**, **Inlet distributor: Removal - Refitting**, page **12A-12**) ,
- the right-hand suspended engine mounting (see **19D**, **Engine mounting**, **Right-hand suspended engine mounting: Removal - Refitting**, page **19D-4**) ,
- the accessories belt (see **11A**, **Top and front of engine**, **Accessories belt: Removal - Refitting**, page **11A-2**) ,
- the timing belt (see **11A**, **Top and front of engine**, **Timing belt: Removal - Refitting**, page **11A-17**) .

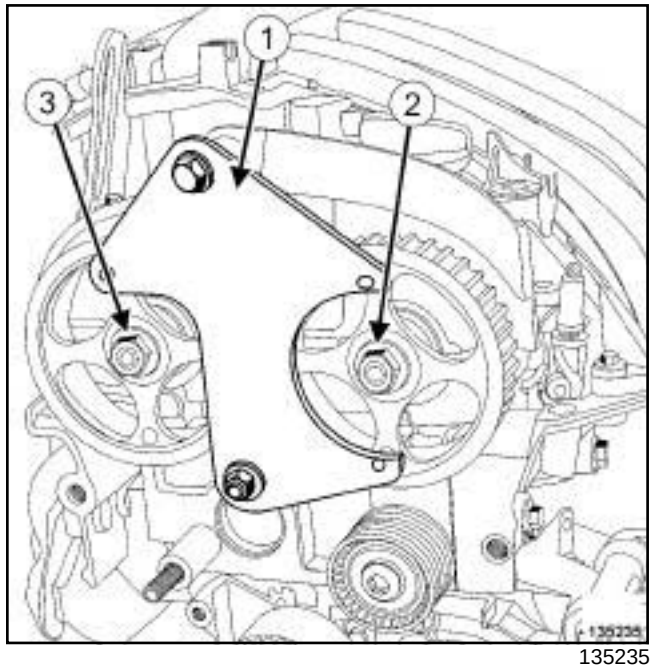

135235

❑ Fit the locking tool (**1**) on the camshaft pulleys.

❑ Remove:

- the inlet camshaft pulley nut (**2**) ,
- the exhaust camshaft pulley nut (**3**) ,
- the,
- the inlet camshaft pulley,
- the exhaust camshaft pulley.

K4M

II - REMOVAL OPERATION

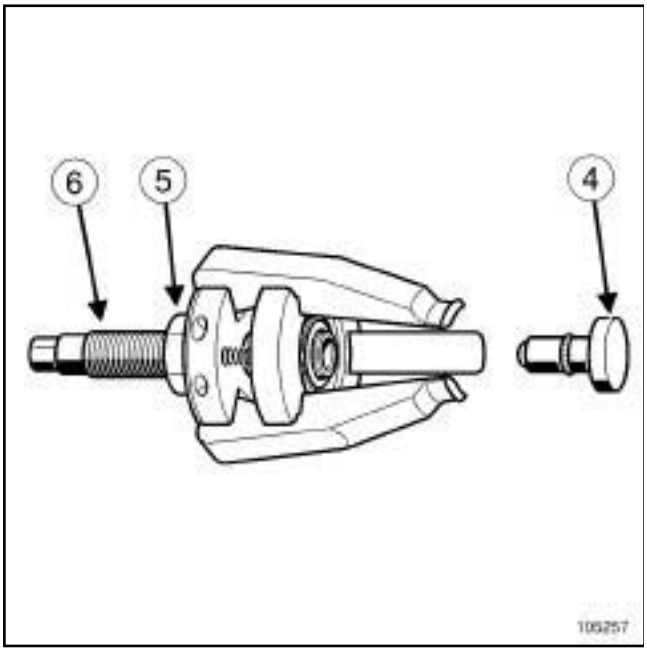

105257

❑

> Note:
>
> The inlet and exhaust camshaft seals are removed using the.

❑ Always remove the end piece (**4**) of the tool.

❑ Loosen bolts (**5**) and (**6**) fully from the.

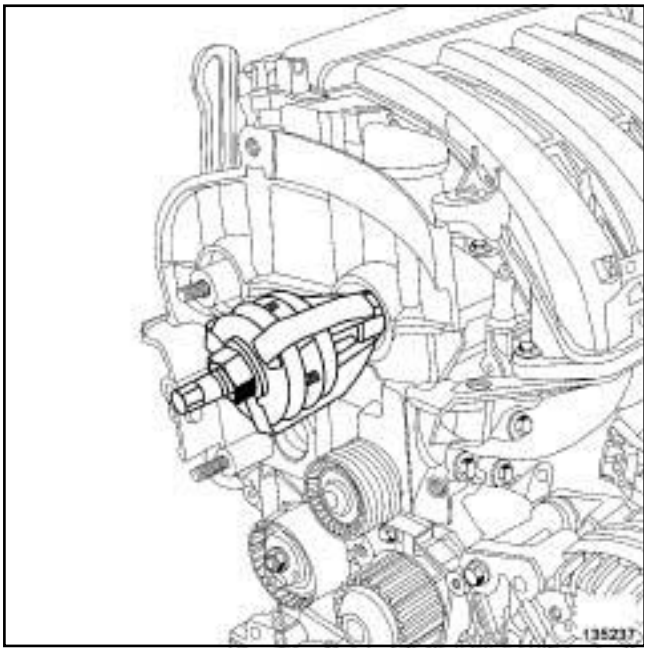

135237

❑ Position the claws of theon the camshaft.

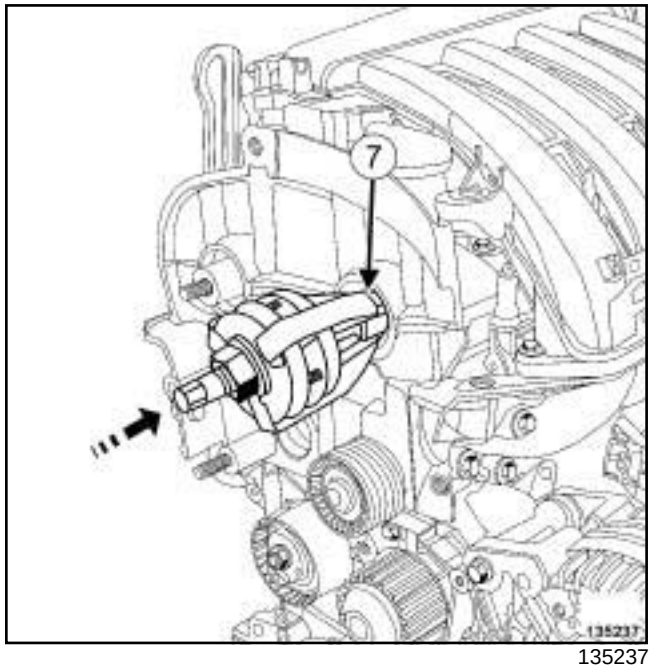

135237

❑ Push theuntil contact is made between the ends of the claws (**7**) and the camshaft seal.

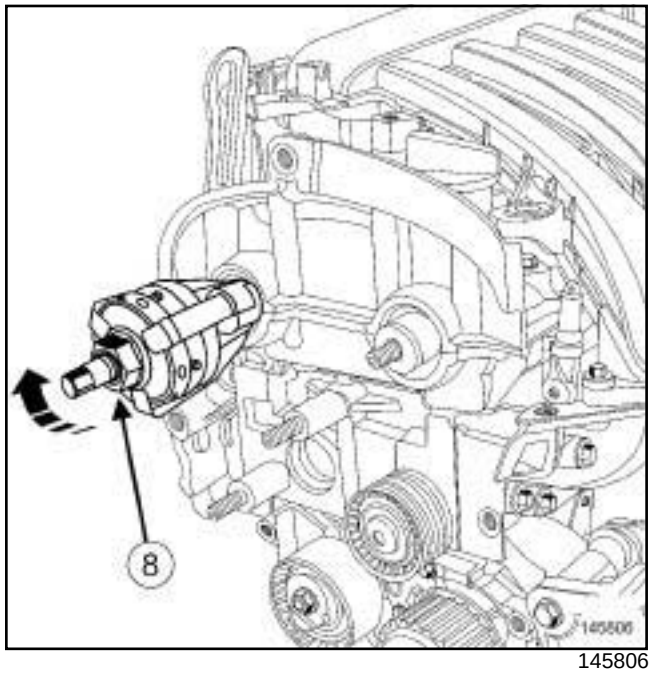

145806

❑ Separate the claws by turning the nut (**8**) clockwise using an open-jawed spanner.

K4M

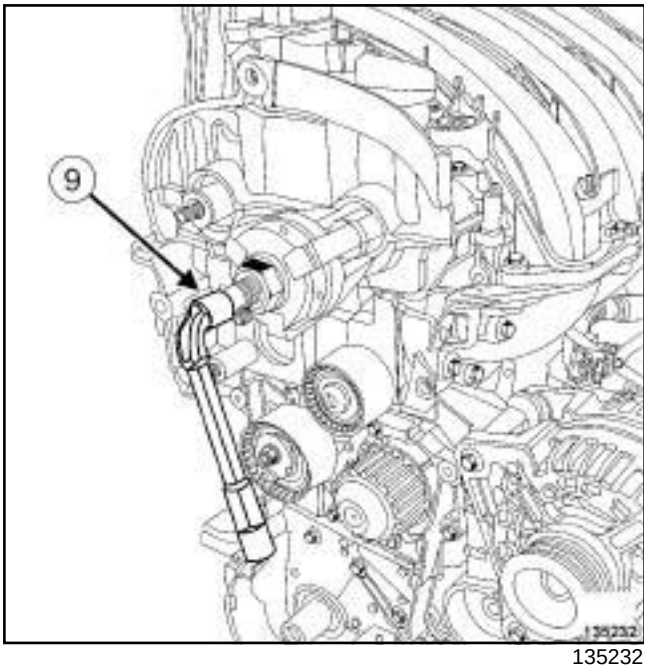

135232

- Remove the camshaft seal by turning the bolt (**9**) clockwise.
- Repeat the previous operations for the other camshaft seal.

REFITTING

I - REFITTING PREPARATION OPERATION

- **parts always to be replaced: Camshaft seal on timing end**
- **parts always to be replaced: Exhaust camshaft pulley nut**
- **Always replace the inlet camshaft pulley nut.**

> **WARNING**
> Do not scrape the joint faces of the aluminium, any damage caused to the joint face will result in a risk of leaks.

> **WARNING**
> To ensure proper sealing, the gasket surfaces must be clean, dry and not greasy (avoid any finger marks).

- Use **SURFACE CLEANER** (see **Vehicle: Parts and consumables for the repair**) (04B, Consumables - Products) to clean and degrease:
  - the seal mating face of each camshaft,
  - the camshaft seal housings.

> Note:
> It is strictly forbidden to lubricate the outer diameter of the ring before fitting.

II - REFITTING OPERATION

Fitting the camshaft seal.

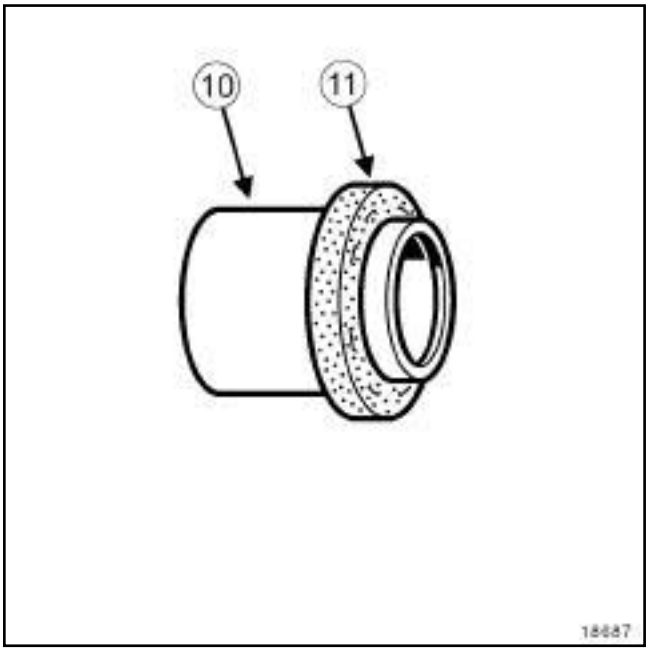

18687

-

> Note:
> Always hold the camshaft seal with the protector (**10**) when handling, as this type of seal is very fragile. It is strictly forbidden to touch seal; (**11**) this is to prevent any oil leaks once the oil seal is fitted to the engine.

K4M

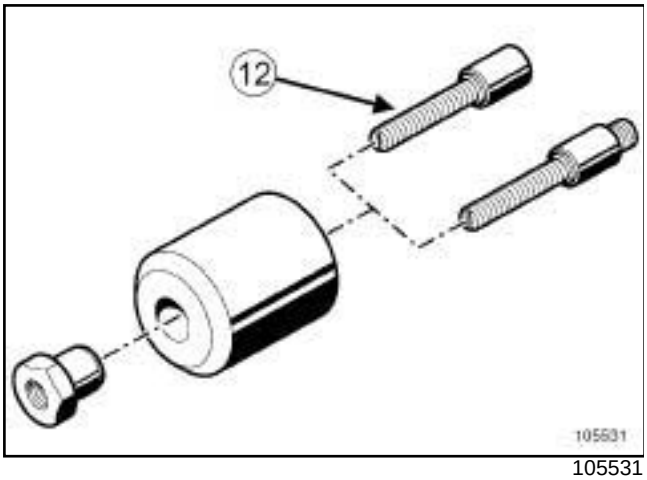

105531

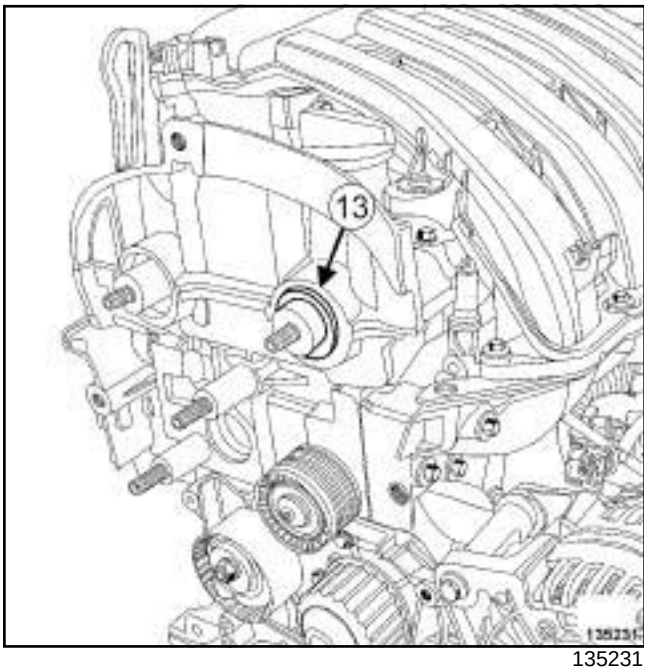

135231

❑ Fit the protector fitted with a new seal (**13**) on the inlet and exhaust camshaft, taking care not to touch the seal.

❑ Screw on the stud (**12**) of the toolon the inlet and exhaust camshafts.

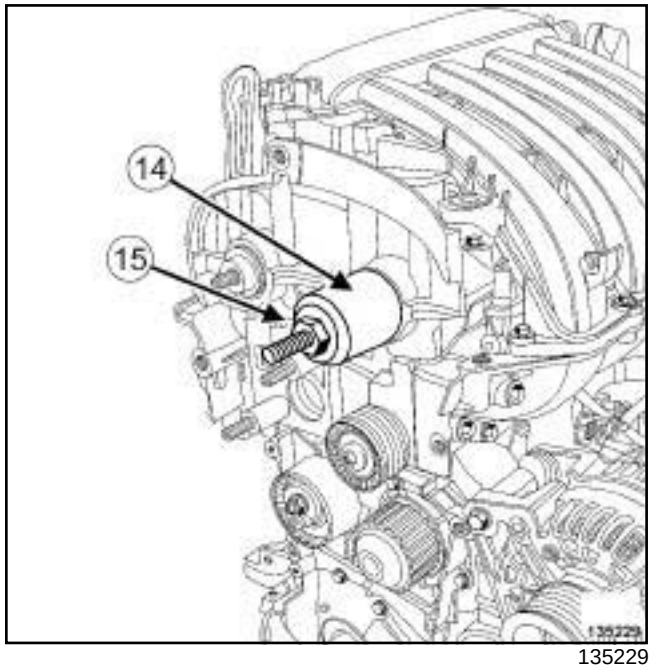

135229

❑ Fit the cover (**14**) and the collar nut (**15**) of the.

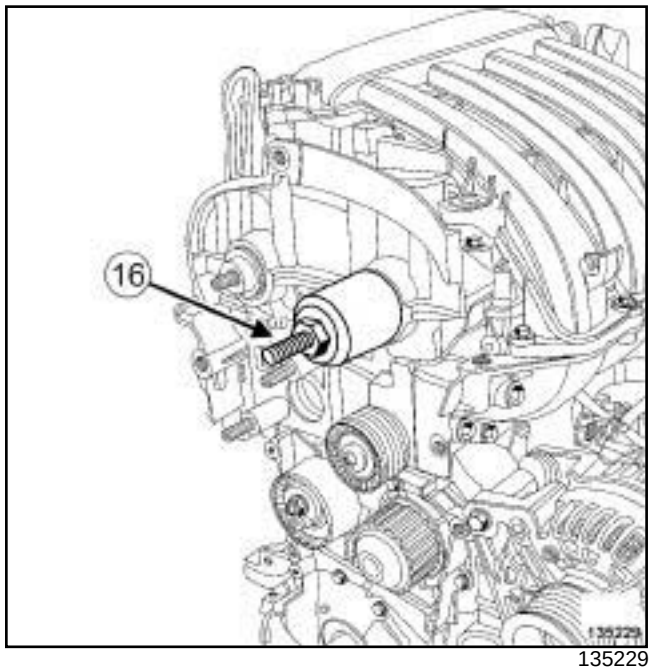

135229

❑ Screw on the collar nut until the cover touches the cylinder head.

❑ Remove:

- the nut,
- the cover,
- the threaded rod (**16**) .

K4M

III - FINAL OPERATION

❏ Refit:

- the inlet camshaft pulley with a new nut,
- the exhaust camshaft pulley with a new nut.

❏ Fit the locking toolon the camshaft pulleys.

❏ Torque tighten:

- the **inlet camshaft hub nut (30 N.m + 84° ± 4°)**,
- the **exhaust camshaft hub nut (30 N.m + 84° ± 4°)**.

❏ Remove the locking tool.

❏ Refit:

- the timing belt (see **11A**, **Top and front of engine**, **Timing belt: Removal - Refitting**, page **11A-17**) ,
- the accessories belt (see **11A**, **Top and front of engine**, **Accessories belt: Removal - Refitting**, page **11A-2**) ,
- the right-hand suspended engine mounting (see **19D**, **Engine mounting**, **Right-hand suspended engine mounting: Removal - Refitting**, page **19D-4**) ,
- the inlet distributor (see **12A**, **Fuel mixture**, **Inlet distributor: Removal - Refitting**, page **12A-12**) ,
- the throttle valve (see **12A**, **Fuel mixture**, **Throttle valve: Removal - Refitting**, page **12A-11**) ,
- the air filter unit (see **12A**, **Fuel mixture**, **Air filter unit: Removal - Refitting**, page **12A-6**) ,
- the front right-hand wheel (see **Wheel: Removal - Refitting**) (35A, Wheels and tyres).

❏ Connect the battery (see **Battery: Removal - Refitting**) (80A, Battery).

K9K

Special tooling required	
Mot. 1430	Set of 5 crankshaft and camshaft pulley timing pins.

Tightening torques ▽	
camshaft stud	**12 N.m**
camshaft pulley nut	**30 N.m + 86° ± 6°.**

REMOVAL

I - REMOVAL PREPARATION OPERATION

❑ Remove the front engine cover.

❑ Remove:

- the front right-hand wheel (see **Wheel: Removal - Refitting**) (35A, Wheels and tyres),
- the front right-hand wheel arch liner (see **Front wheel arch liner: Removal - Refitting**) (55A, Exterior protection),
- the engine undertray bolts,
- the engine undertray,
- the right-hand suspended engine mounting (see **19D**, **Engine mounting**, **Right-hand suspended engine mounting: Removal - Refitting**, page **19D-4**) ,
- the camshaft position sensor (see **13B**, **Diesel injection**, **Camshaft position sensor: Removal - Refitting**, page **13B-7**) ,
- the accessories belt (see **11A**, **Top and front of engine**, **Accessories belt: Removal - Refitting**, page **11A-2**) ,
- the crankshaft accessories pulley (see **11A**, **Top and front of engine**, **Crankshaft accessories pulley: Removal - Refitting**, page **11A-10**) ,
- the timing belt (see **11A**, **Top and front of engine**, **Timing belt: Removal - Refitting**, page **11A-17**) ,
- the **(Mot. 1430)**.

II - REMOVAL OPERATION

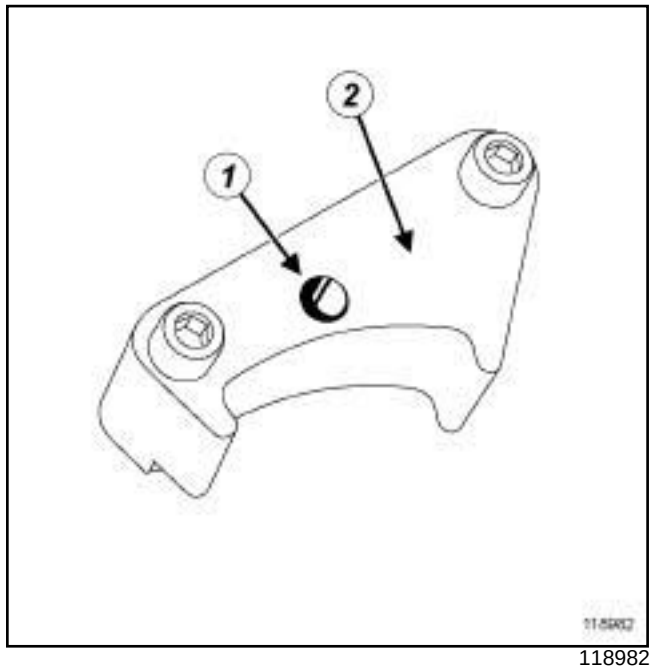

118982

❑ Increase the hole (**1**) of the (**2**) using an **8.5 mm** drill bit.

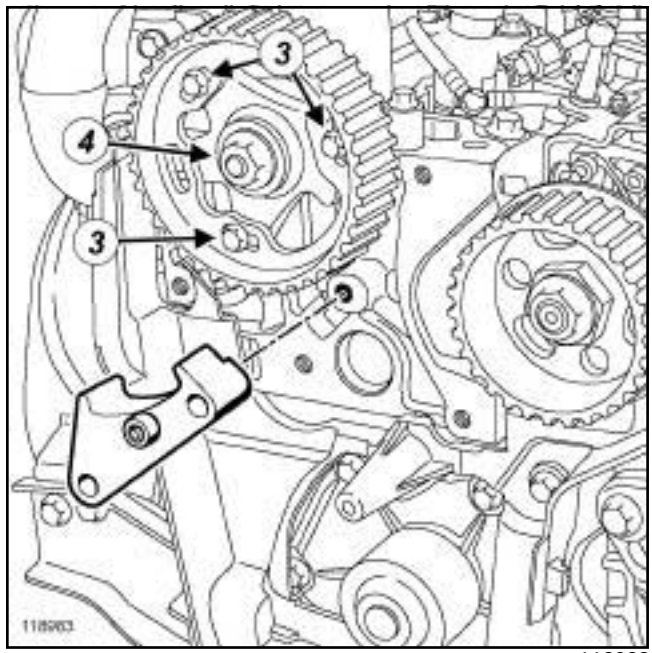

118983

❑ Undo the camshaft pulley hub bolts (**3**) .

❑ Fit theon the cylinder head to lock the camshaft pulley wheel.

❑ Tighten the camshaft pulley hub bolts (**3**) .

❑ Remove:

- the nut (**4**) from the camshaft pulley,
- the,

K9K

- the camshaft pulley.

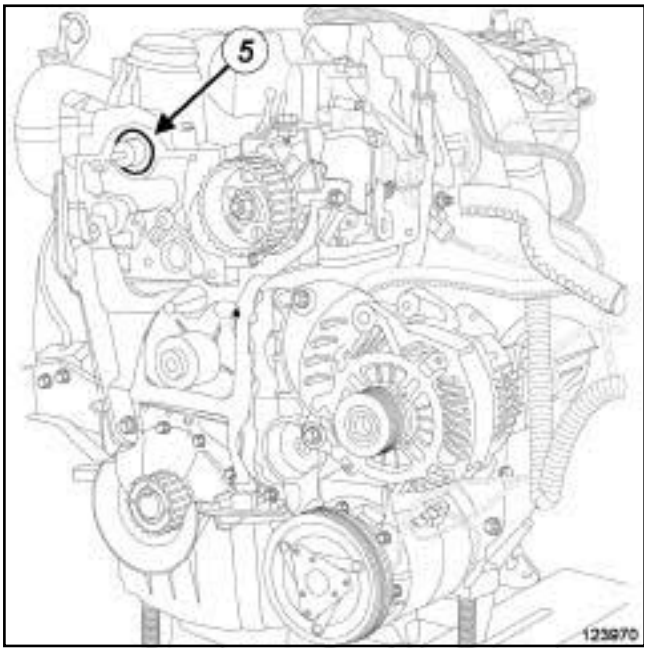

123970

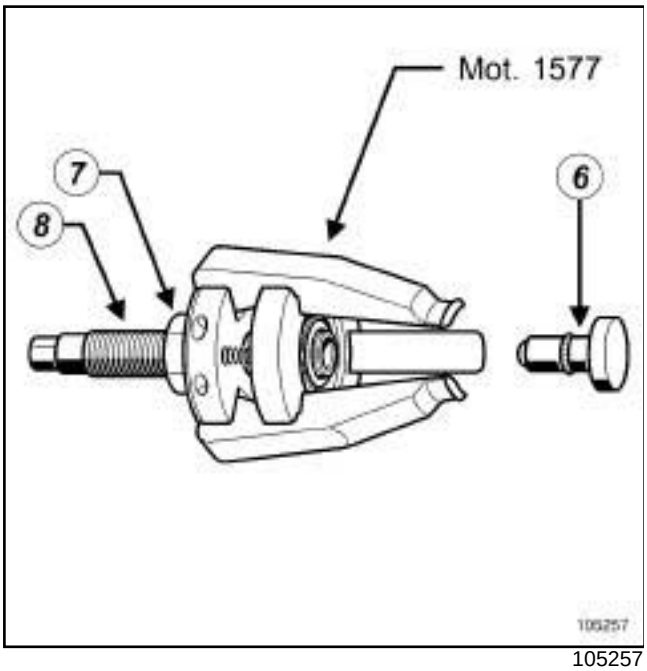

105257

❑

> Note:
>
> The camshaft seal is removed using the.

❑ Remove the camshaft seal (**5**) making sure that the end piece (**6**) of the toolis always removed.

❑ Loosen bolts (**7**) and (**8**) fully from the.

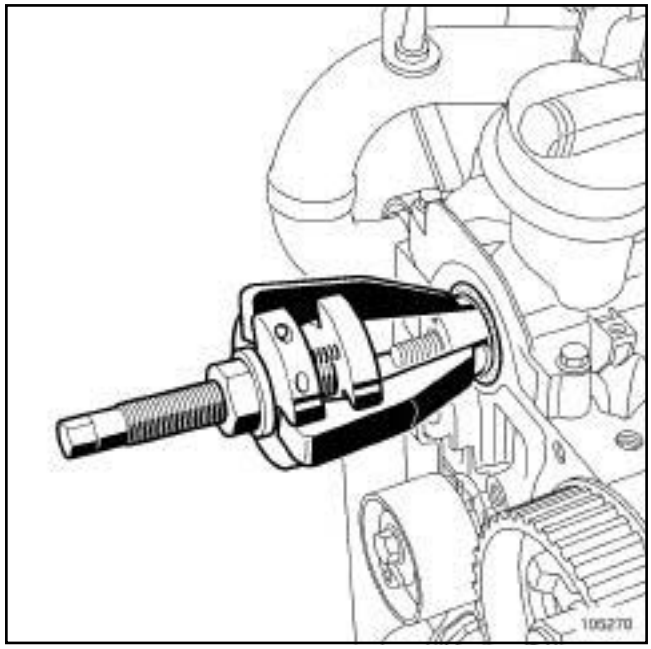

105270

❑ Position the claws of theon the camshaft.

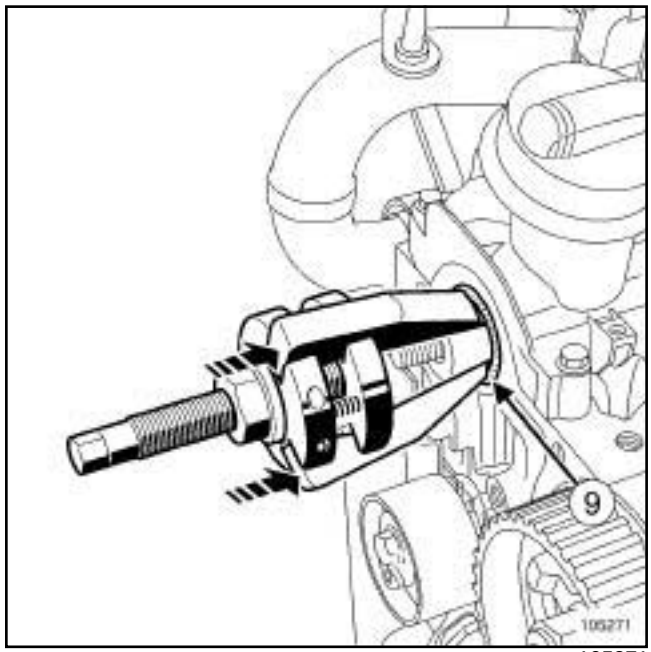

105271

❑ Push the tooluntil contact is made between the ends (**9**) of the claws and the camshaft seal.

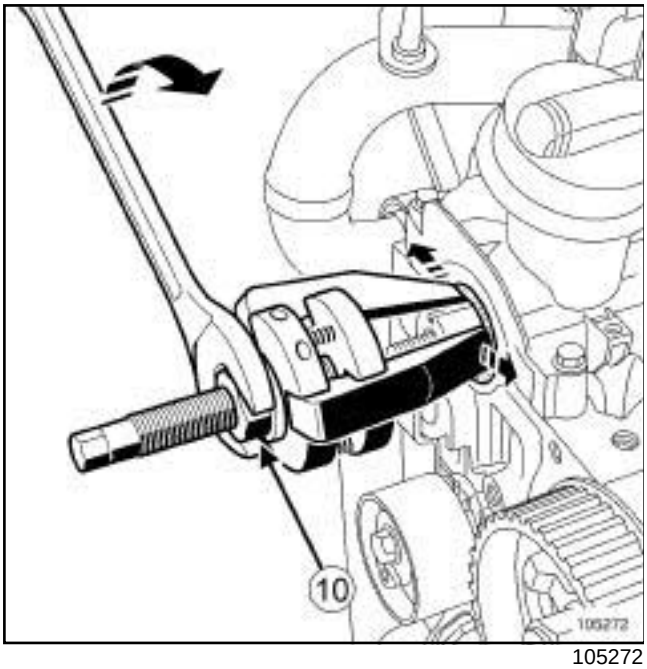

105272

❑ Separate the claws by turning the bolt (**10**) clockwise using an open-jawed spanner.

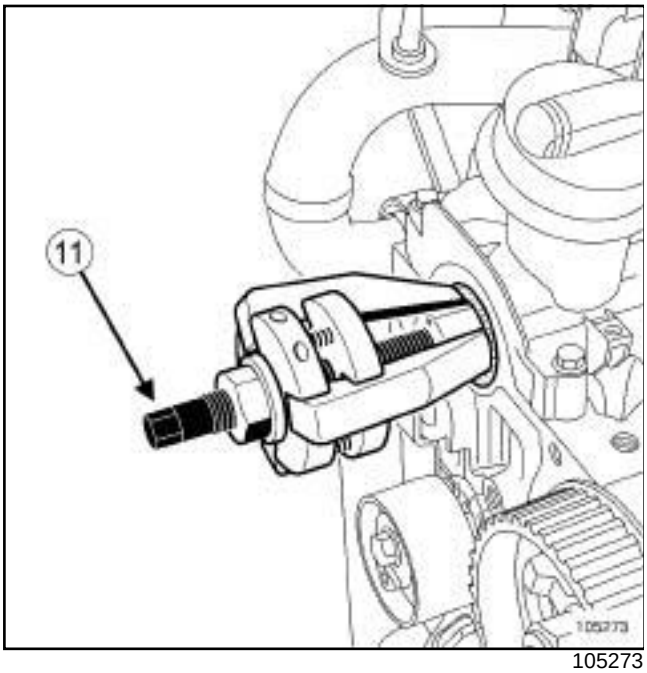

105273

❑ Remove the camshaft seal by turning the bolt (**11**) clockwise.

REFITTING

I - REFITTING PREPARATION OPERATION

❑ Use **SURFACE CLEANER** (see **Vehicle: Parts and consumables for the repair**) (04B, Consumables - Products) to clean and degrease:

- the camshaft seal housing in the cylinder head,
- the camshaft seal mating face on the camshaft.

WARNING
Do not scrape the joint faces of the aluminium, any damage caused to the joint face will result in a risk of leaks.

WARNING
To ensure proper sealing, the gasket surfaces must be clean, dry and not greasy (avoid any finger marks).

❑ **parts always to be replaced: Camshaft seal on timing end**.

❑ **parts always to be replaced: camshaft timing sprocket nut**.

❑ **parts always to be replaced: camshaft timing sprocket stud (if loosened)**.

K9K

II - REFITTING OPERATION FOR PART CONCERNED

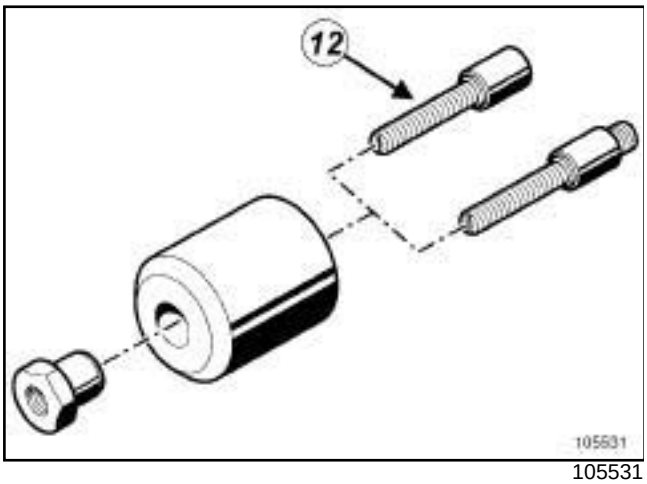

105531

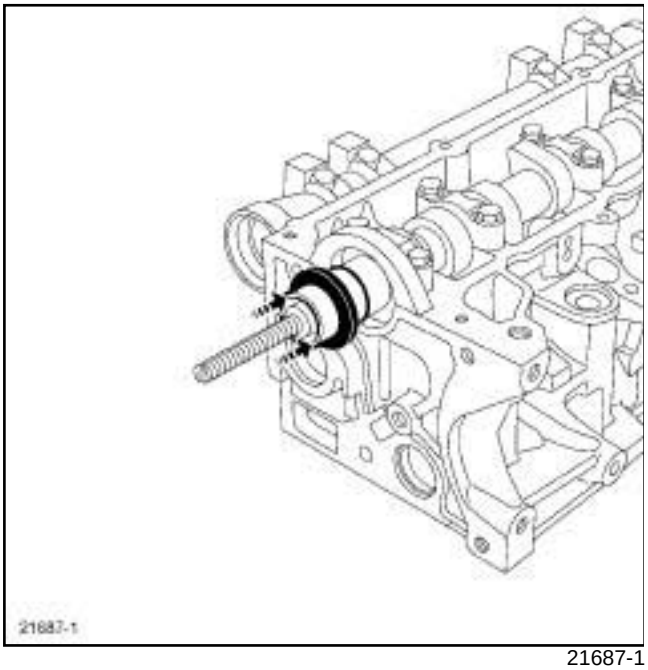

21687-1

❏ Screw the stud (**12**) of theonto the camshaft.

❏ Fit a new camshaft seal on the camshaft.

Note:

For camshaft seals delivered fitted to a protective sleeve:

- do not remove the camshaft seal from its protective sleeve,
- fit the sleeve fitted with the camshaft seal to the camshaft,
- push the protective sleeve towards the cylinder head until the camshaft seal reaches its limit on the cylinder head,
- fit the seal on the camshaft by following the recommendations below.

1 - First fitting of the camshaft seal

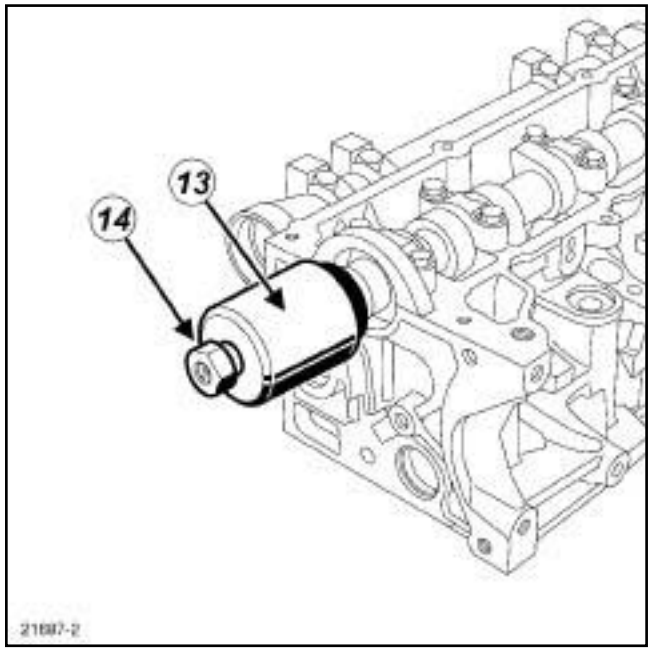

21687-2

❏ Fit the cover (**13**) and the collar nut (**14**) of the.

K9K

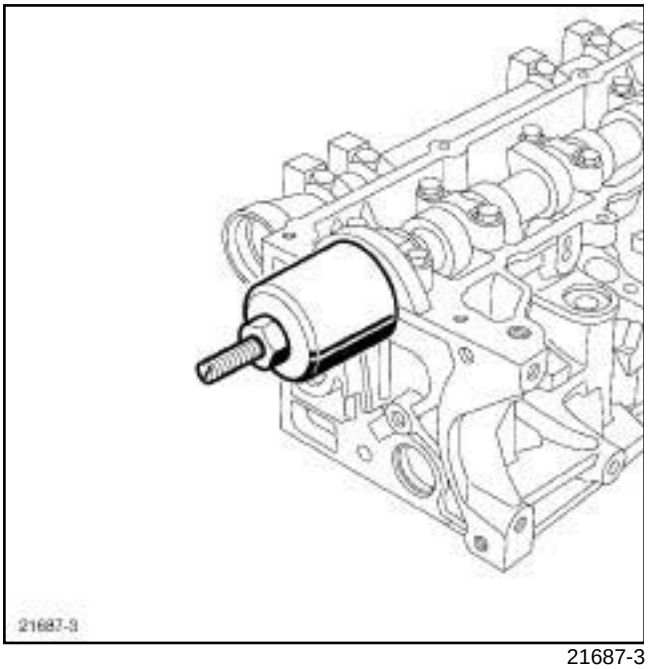

21687-3

❑ Screw on the collar nut until the cover touches the cylinder head.

2 - Second fitting of the camshaft seal

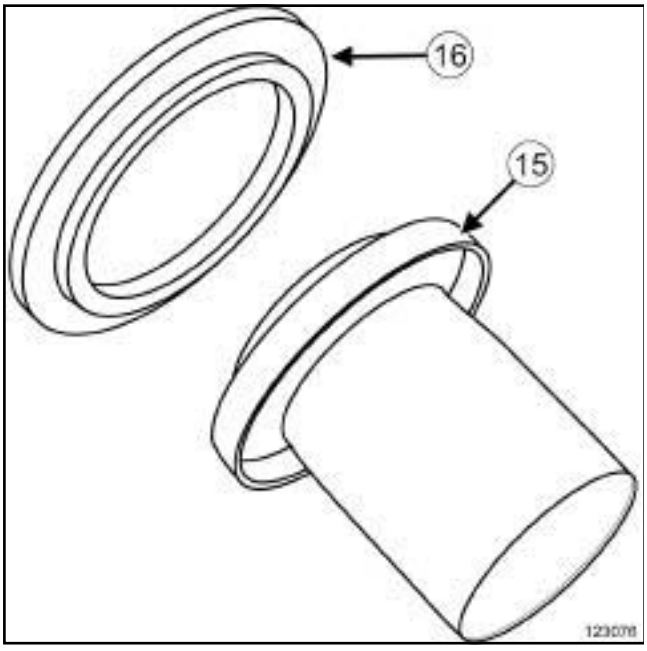

123076

❑ Depending on the case, the Parts Department delivers seals (**15**) equipped with a spacer (**16**) amongst other things.

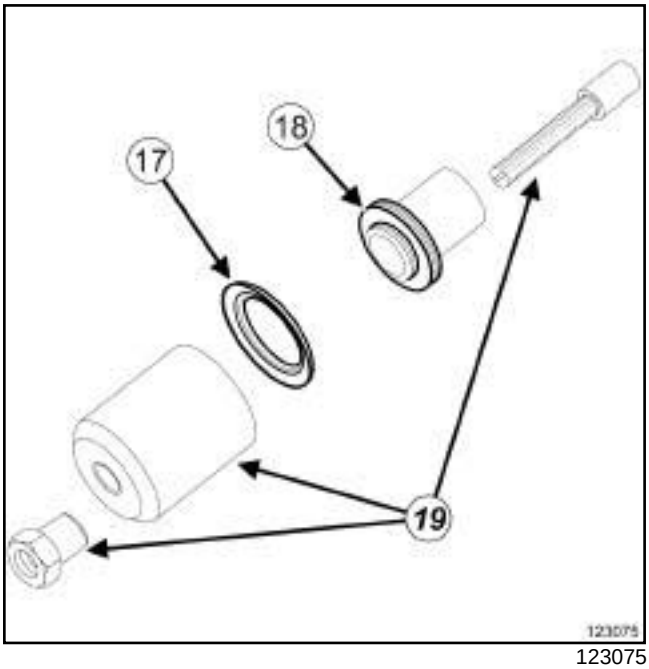

123075

❑

Note:

The spacer (**17**) is used to fit the seal (**18**) and is used in addition to the tool (**19**) .

K9K

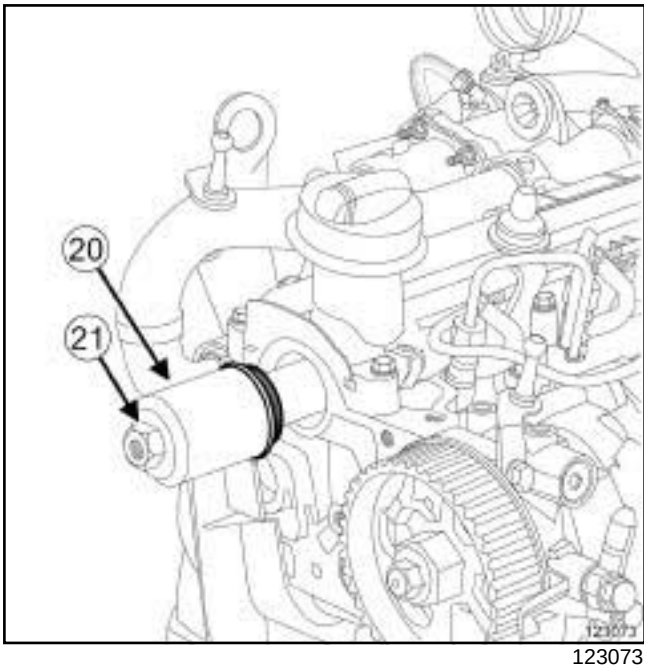

123073

❑ Position the bell (**20**) fitted with the spacer on the camshaft seal side and then position the collared nut (**21**) of the tool.

> Note:
>
> The spacer fits on the bell of the toolso that the internal edge of the spacer is on the side of the camshaft seal.

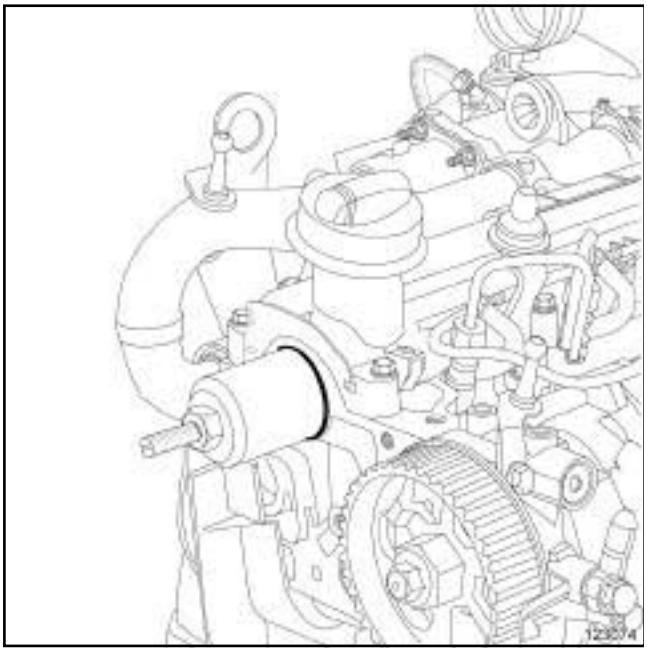

123074

❑ Screw on the collar nut until the spacer fitted on the cover touches the cylinder head.

3 - Continued for both methods

❑ Remove:

- the collar nut from the,
- the cover from the,
- the stud of the,
- the protective sleeve and the spacer, if fitted then throw them away.

❑ Torque tighten the **camshaft stud (12 N.m)**

❑ Refit:

- the camshaft pulley,
- a new camshaft pulley nut.

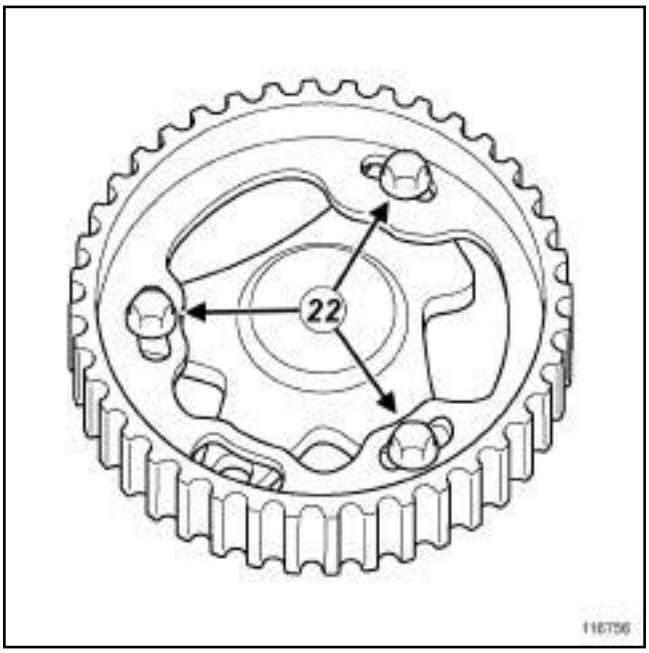

116756

❑ Undo the camshaft pulley hub bolts (**22**) .

❑ Fit theon the cylinder head to lock the camshaft pulley wheel.

❑ Tighten:

- the camshaft pulley hub bolts,
- to torque and angle the **camshaft pulley nut (30 N.m + 86° ± 6°.)**

❑ Remove the tool.

K9K

III - FINAL OPERATION

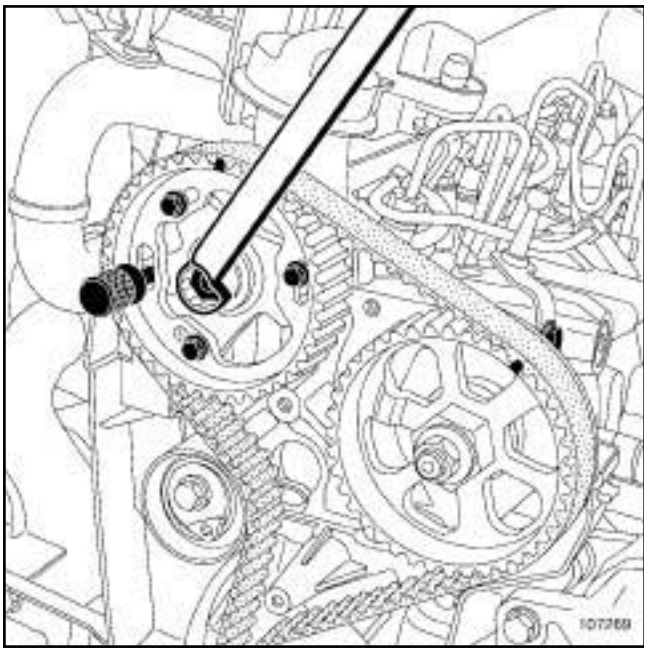

107269

❑ Set the camshaft pulley hub using the tool **(Mot. 1430)**.

> Note:
>
> If the pin **(Mot. 1430)** does not engage, tum the camshaft pulley hub using an **18 mm** offset wrench to facilitate the setting of the camshaft pulley hub.

❑ Refit:

- the timing belt (see **11A**, **Top and front of engine**, **Timing belt: Removal - Refitting**, page **11A-17**) .
- the accessories belt (see **11A**, **Top and front of engine**, **Accessories belt: Removal - Refitting**, page **11A-2**) ,
- the camshaft position sensor (see **13B**, **Diesel injection**, **Camshaft position sensor: Removal - Refitting**, page **13B-7**) ,
- the right-hand suspended engine mounting (see **19D**, **Engine mounting**, **Right-hand suspended engine mounting: Removal - Refitting**, page **19D-4**) ,
- the engine undertray,
- the front right-hand wheel arch liner (see **Front wheel arch liner: Removal - Refitting**) (55A, Exterior protection),
- the front right-hand wheel (see **Wheel: Removal - Refitting**) (35A, Wheels and tyres).

❑ Refit the engine cover.

K4M

Tightening torques ▽	
new oil separator bolts	**15 N.m**

REMOVAL

I - REMOVAL PREPARATION OPERATION

❑ Remove:

- the air resonator (see **12A**, **Fuel mixture**, **Air resonator: Removal - Refitting**, page **12A-2**) ,
- the air filter unit (see **12A**, **Fuel mixture**, **Air filter unit: Removal - Refitting**, page **12A-6**) ,
- the throttle valve (see **12A**, **Fuel mixture**, **Throttle valve: Removal - Refitting**, page **12A-11**) ,
- the inlet distributor (see **12A**, **Fuel mixture**, **Inlet distributor: Removal - Refitting**, page **12A-12**) ,
- the ignition coils (see **17A**, **Ignition**, **Coils: Removal - Refitting**, page **17A-1**) .

II - REMOVAL OPERATION

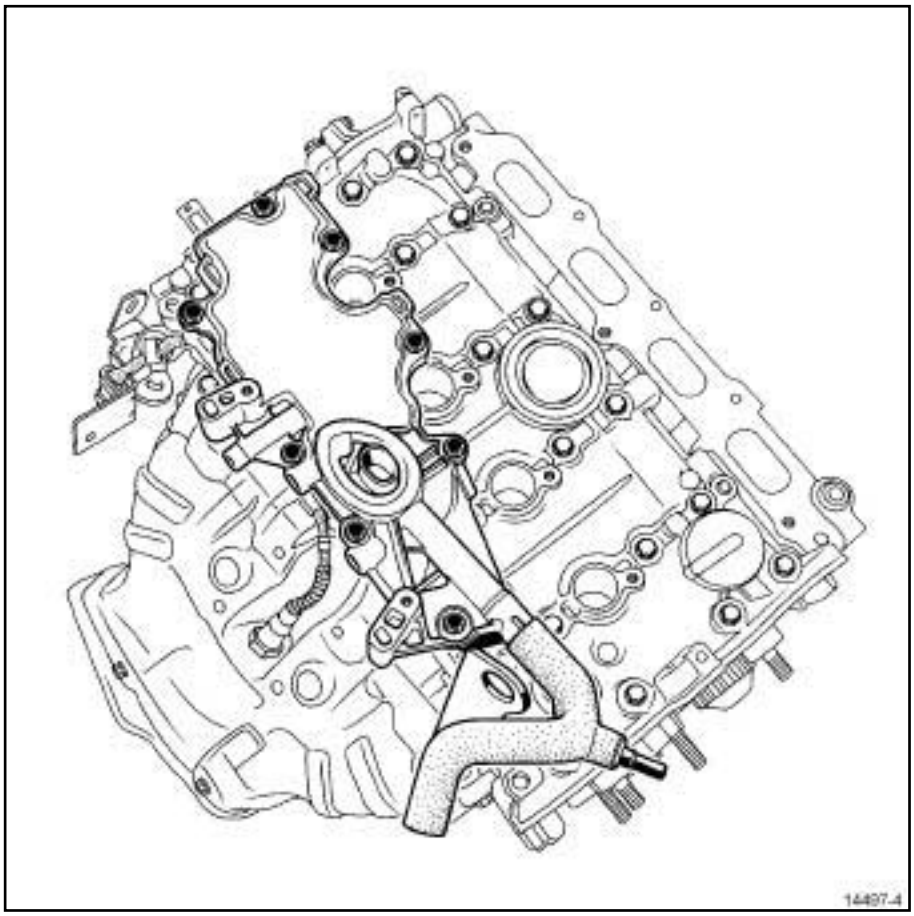

14497-4

❑ Remove:

- the oil decanter bolts,
- the oil decanter.

K4M

REFITTING

I - REFITTING PREPARATION OPERATION

❑ **parts always to be replaced: oil decanter bolt**

> **WARNING**
> Do not scrape the joint faces of the aluminium, any damage caused to the joint face will result in a risk of leaks.

> **WARNING**
> When cleaning parts, it is essential that the parts do not impact on each other, otherwise their mating faces may be damaged and therefore their adjustments may be altered, which could damage the engine.

❑ Use **SUPER CLEANING AGENT FOR JOINT FACES** (see **Vehicle: Parts and consumables for the repair**) (04B, Consumables - Products) to clean:

- the oil separator joint face if it is to be re-used,
- the rocker cover joint face.

❑ Use **SURFACE CLEANER** (see **Vehicle: Parts and consumables for the repair**) (04B, Consumables - Products) to degrease:

- the oil separator joint face if it is to be re-used,
- the rocker cover joint face.

> **WARNING**
> To ensure proper sealing, the gasket surfaces must be clean, dry and not greasy (avoid any finger marks).

> **WARNING**
> Applying excess sealant could cause it to be squeezed out when parts are tightened. A mixture of sealant and fluid could damage certain components (engine, radiator, etc.).

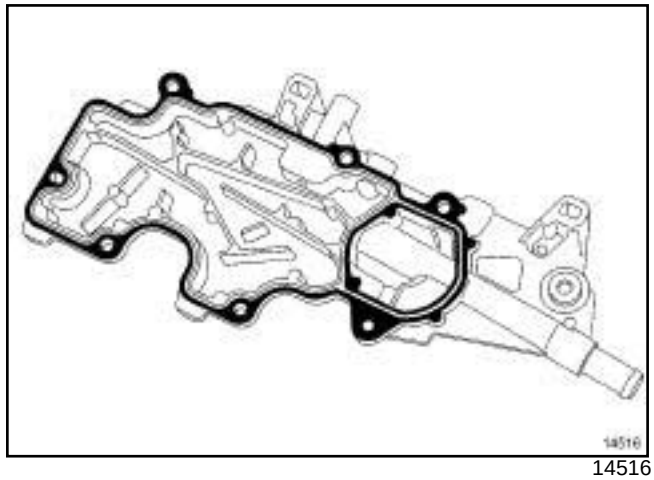

14516

❑ Apply **RESIN ADHESIVE** (see **Vehicle: Parts and consumables for the repair**) (04B, Consumables - Products) using a stipple roller on the joint face of the oil separator until the joint face is completely coated.

II - REFITTING OPERATION

❑ Refit the oil separator.

K4M

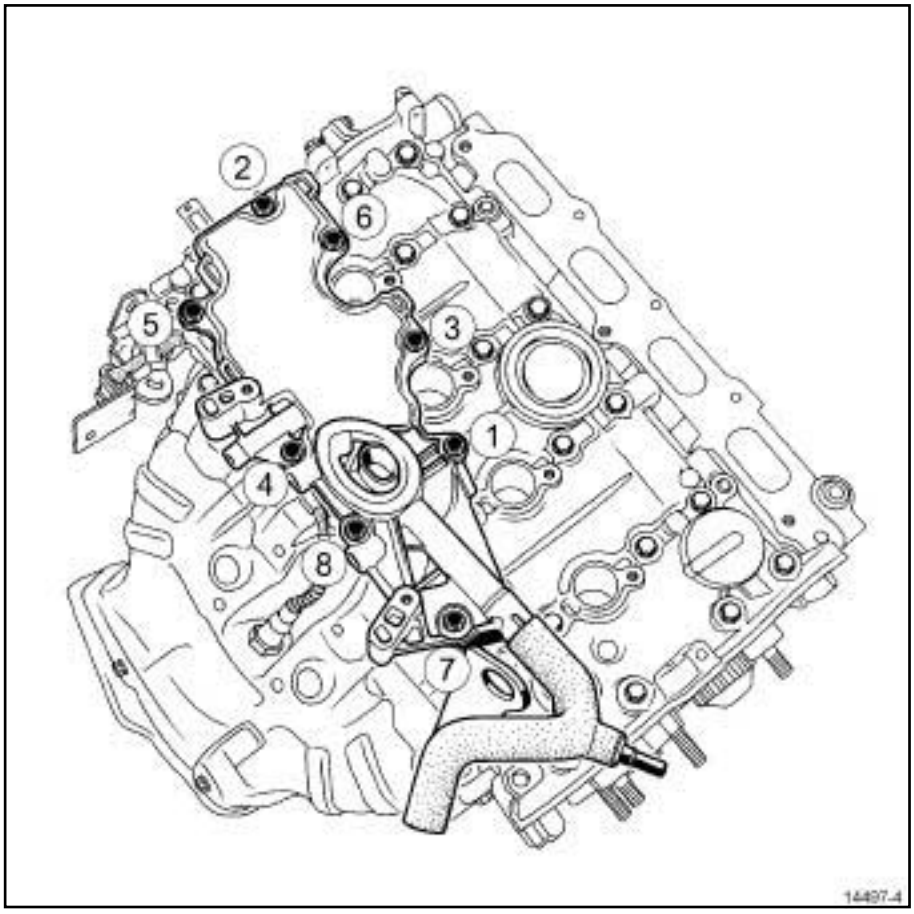

14497-4

❑ Torque tighten in order the **new oil separator bolts (15 N.m)**.

III - FINAL OPERATION

❑ Refit:

- the ignition coils (see **17A**, **Ignition**, **Coils: Removal - Refitting**, page **17A-1**) ,
- the inlet distributor (see **12A**, **Fuel mixture**, **Inlet distributor: Removal - Refitting**, page **12A-12**) ,
- the throttle valve (see **12A**, **Fuel mixture**, **Throttle valve: Removal - Refitting**, page **12A-11**) ,
- the air filter unit (see **12A**, **Fuel mixture**, **Air filter unit: Removal - Refitting**, page **12A-6**) ,
- the air resonator (see **12A**, **Fuel mixture**, **Air resonator: Removal - Refitting**, page **12A-2**) .

K4M

Diagram of the air inlet circuit

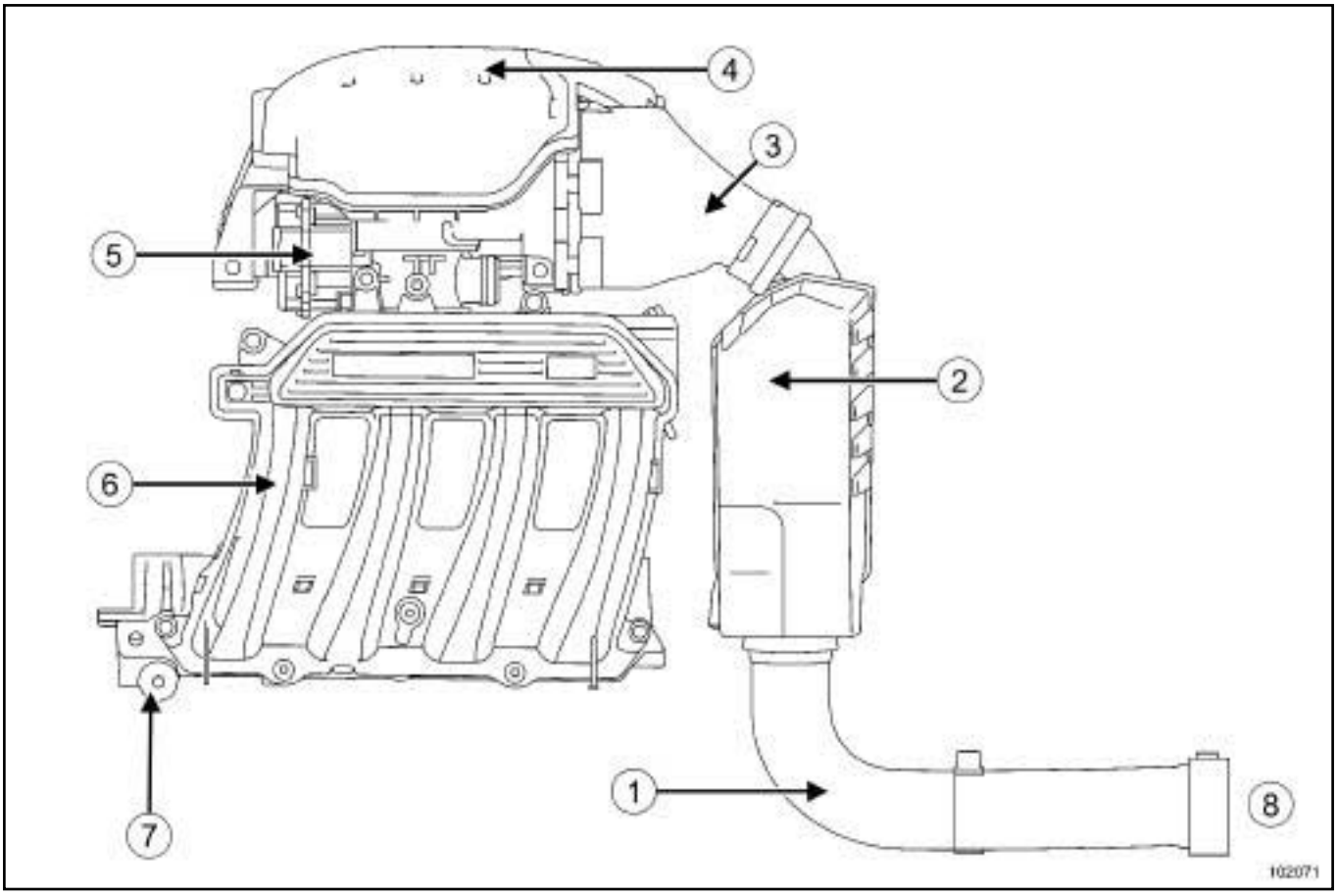

102071

(**1**)	Air inlet trunking
(**2**)	Air resonator
(**3**)	Air filter unit
(**4**)	Air filter
(**5**)	Throttle valve
(**6**)	Inlet manifold
(**7**)	Injector holder shim
(**8**)	Air inlet

K4M

REMOVAL

REMOVAL OPERATION FOR PART CONCERNED

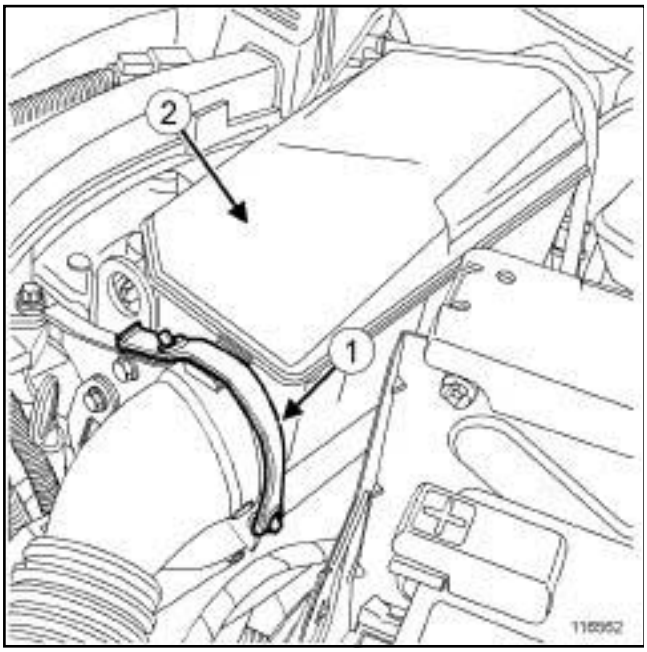

116562

❑ Remove:

- the elastic mounting (**1**) from the air resonator unit,
- the air resonator unit (**2**) .

REFITTING

REFITTING OPERATION FOR PART CONCERNED

❑ Refit:

- the air resonator unit,
- the air resonator elastic mounting.

K4M

REMOVAL

I - REMOVAL PREPARATION OPERATION

❑ Remove the air resonator (see **12A**, **Fuel mixture**, **Air resonator: Removal - Refitting**, page **12A-2**) .

❑ Disconnect the brake servo vacuum pipe ***(1)*** from the inlet distributor.

II - REMOVAL OPERATION

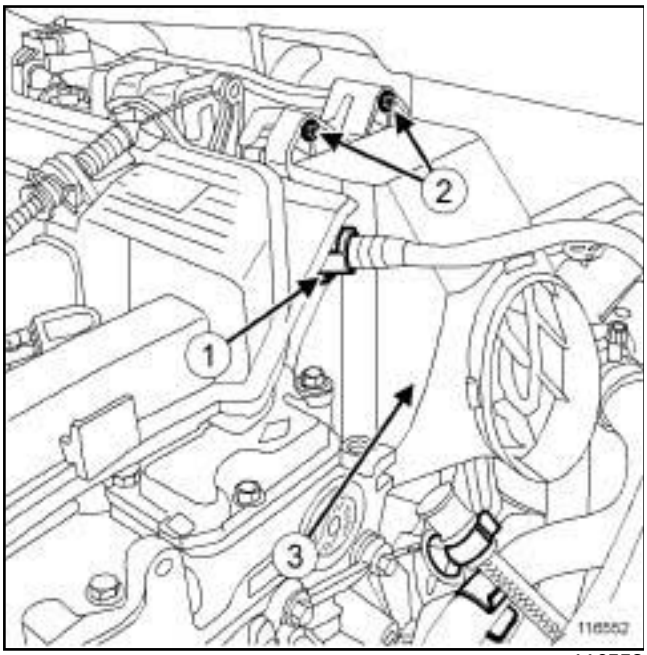

116552

❑

> **WARNING**
> Do not damage the vacuum outlet on the inlet distributor. If it is damaged, the inlet distributor will need to be replaced.

❑ Remove:

- the two bolts (**2**) from the air filter cover,
- the air filter cover (**3**) ,
- the air filter.

REFITTING

I - REFITTING PREPARATION OPERATION

❑ Clean the air filter housing.

II - REFITTING OPERATION FOR PART CONCERNED

❑ Refit:

- the air filter,
- the air filter cover,
- the two air filter cover bolts.

III - FINAL OPERATION

❑ Reconnect the brake servo vacuum pipe to the inlet distributor.

❑ Refit the air resonator (see **12A**, **Fuel mixture**, **Air resonator: Removal - Refitting**, page **12A-2**) .

K9K

REMOVAL

I - REMOVAL PREPARATION OPERATION

❑ Remove the air filter unit (see **12A**, **Fuel mixture**, **Air filter unit: Removal - Refitting**, page **12A-6**) .

II - OPERATION FOR REMOVAL OF PART CONCERNED

1 - First fitting of air filter unit

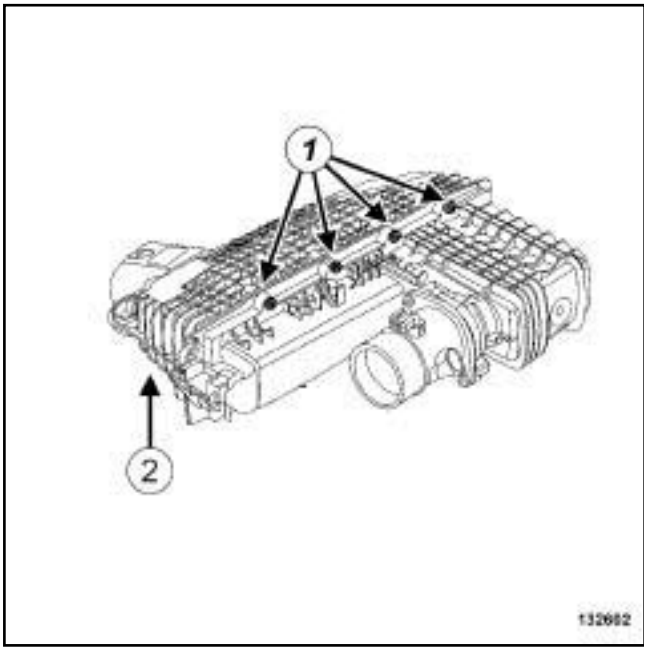

132602

❑ Remove the 4 bolts (**1**) from the air filter unit.

❑ Pivot the hinged cover (**2**) of the air filter unit in relation to the air filter unit tank.

❑ Move aside the air filter unit cover (**2**) .

2 - Second fitting of air filter unit

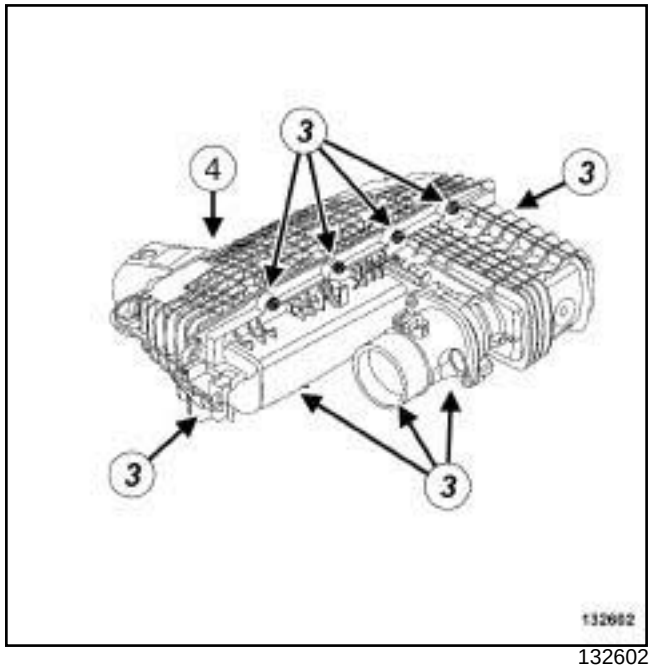

132602

❑ Remove the 9 bolts (**3**) from the air filter unit.

❑ Move aside the air filter unit cover (**4**) .

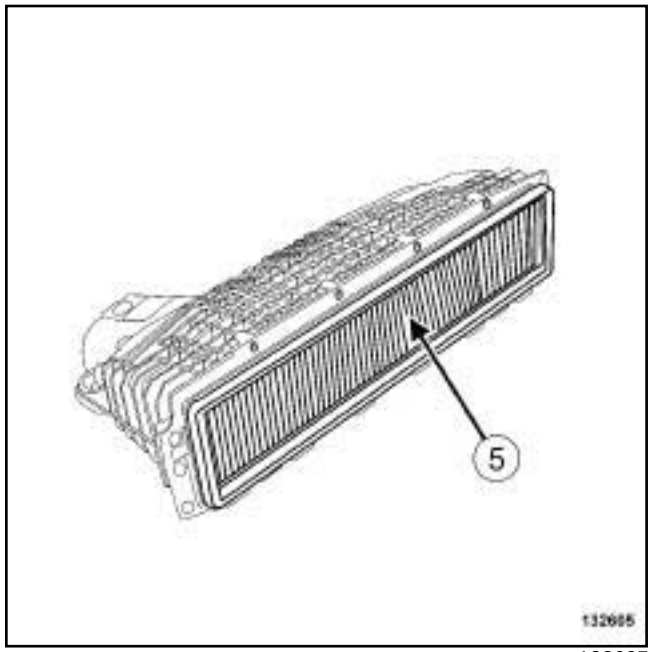

132605

❑ Remove the air filter (**5**) from the air filter unit cover.

REFITTING

I - REFITTING PREPARATION OPERATION

❑ Clean the air filter unit.

K9K

II - REFITTING OPERATION FOR PART CONCERNED

❏ Refit the air filter in the air filter unit cover.

> **WARNING**
> If the air filter is fitted incorrectly in the air filter unit, unfiltered air may enter the engine and cause the engine to malfunction.

❏ Fit the air filter unit cover.

III - FINAL OPERATION

❏ Refit the air filter unit (see **12A**, **Fuel mixture**, **Air filter unit: Removal - Refitting**, page **12A-6**) .

K9K

REMOVAL

I - REMOVAL PREPARATION OPERATION

❑ Remove the engine cover.

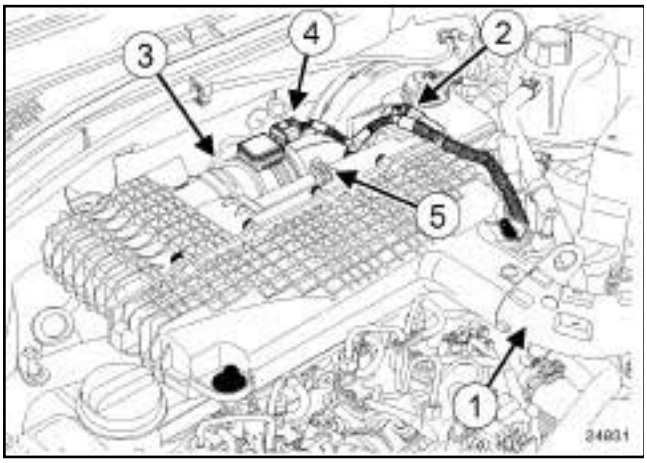

24831

❑ Disconnect:

- the air intake sleeve (**1**) on the air filter unit,
- the air pressure sensor connector (**2**) from the air filter unit.

❑ Disconnect the connector from the air flowmeter (**4**) .

❑ Disconnect the air inlet duct (**5**) from the air filter unit.

❑ Move aside the air filter unit wiring harness.

II - OPERATION FOR REMOVAL OF PART CONCERNED

❑ Lift up the front section of the air filter unit.

❑ Slide the air filter unit to the left.

❑ Remove:

- the bolt of the turbocharger pressure sensor,
- the turbocharger pressure sensor on the air filter unit.

❑ Remove the air filter unit.

REFITTING

I - REFITTING PREPARATION OPERATION

❑ Check that there are mounting studs for the air filter unit on the EGR mounting and on the brackets.

> Note:
>
> Replace the studs if necessary.

II - REFITTING OPERATION FOR PART CONCERNED

❑ Fit the air filter unit sideways against the EGR valve mounting.

❑ Slide the air filter unit to the right.

❑ Refit:

- the turbocharger pressure sensor on the air filter unit.
- the bolt of the turbocharger pressure sensor,

❑ Refit the air filter unit by lowering it vertically from the injection end.

III - FINAL OPERATION

❑ Connect the air inlet duct to the air filter unit.

❑ Connect the air flowmeter connector.

❑ Connect:

- the turbocharging pressure sensor connector,
- the air intake sleeve on the air filter unit.

❑ Refit the engine cover.

K4M

Tightening torques ▽	
air filter unit bolts	**9 N.m**

REMOVAL

I - REMOVAL PREPARATION OPERATION

❑ Disconnect the battery (see **Battery: Removal - Refitting**) (80A, Battery).

❑ Remove the air resonator (see **12A**, **Fuel mixture**, **Air resonator: Removal - Refitting**, page **12A-2**) .

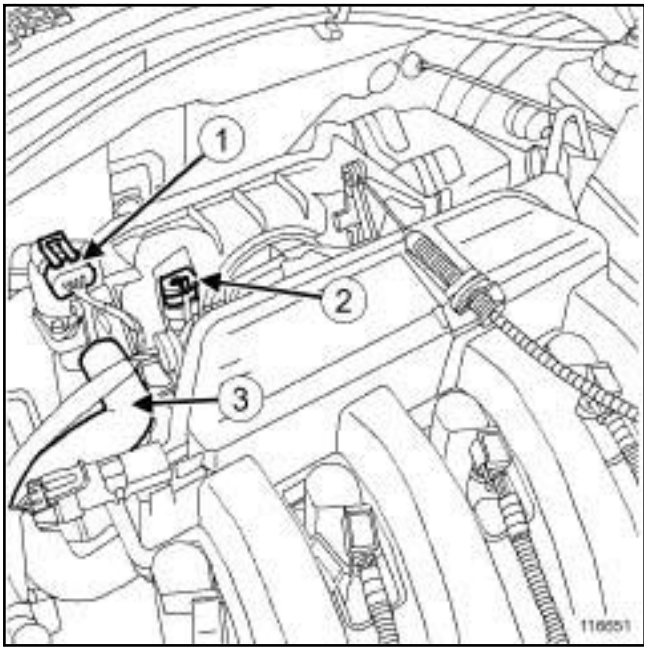

116651

❑ Disconnect:

- the idle speed regulation stepping motor connector (**1**) ,
- the connector (**2**) from the throttle position potentiometer,
- the petrol vapour recirculation pipe (**3**) .

II - OPERATION FOR REMOVAL OF PART CONCERNED

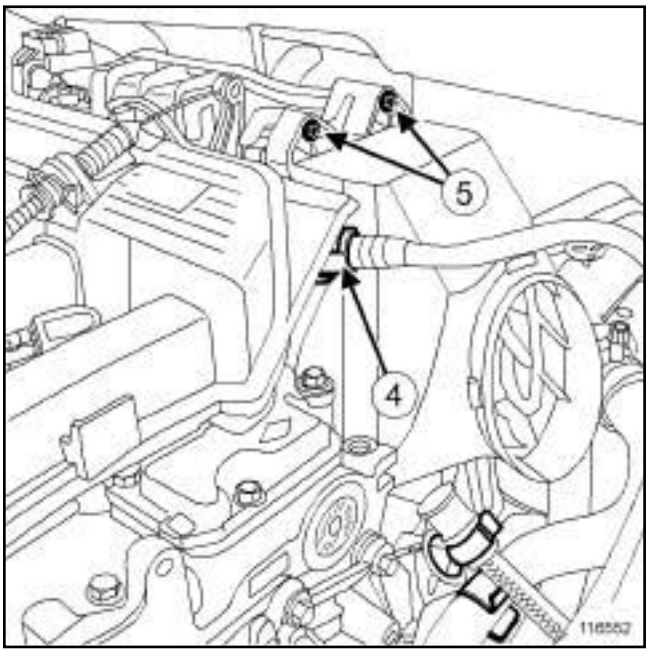

116552

❑ Disconnect the vacuum pipe (**4**) from the brake servo on the inlet distributor

❑ Remove:

- the two bolts (**5**) from the air filter cover,
- the filter element.

❑

> **WARNING**
> Do not damage the vacuum outlet on the inlet distributor. If it is damaged, the inlet distributor will have to be replaced.

K4M

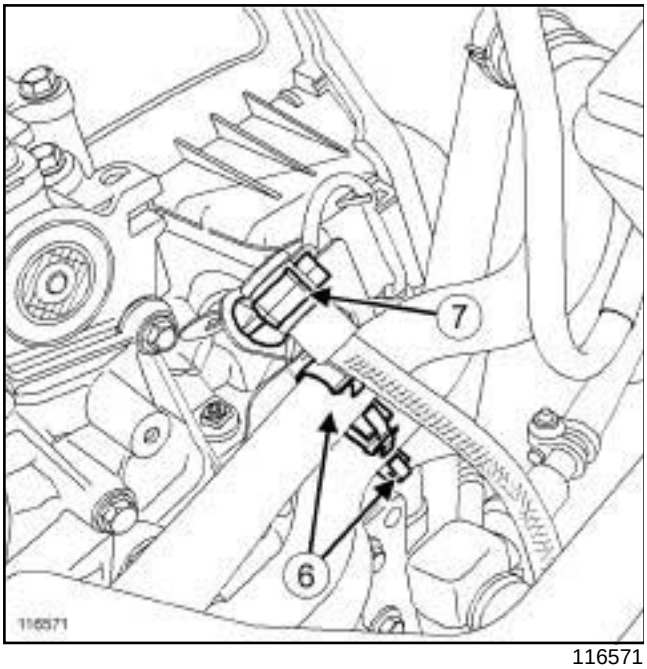

116571

❑ Unclip:

- the coolant pipes at (**6**) ,
- the breather (**7**) .

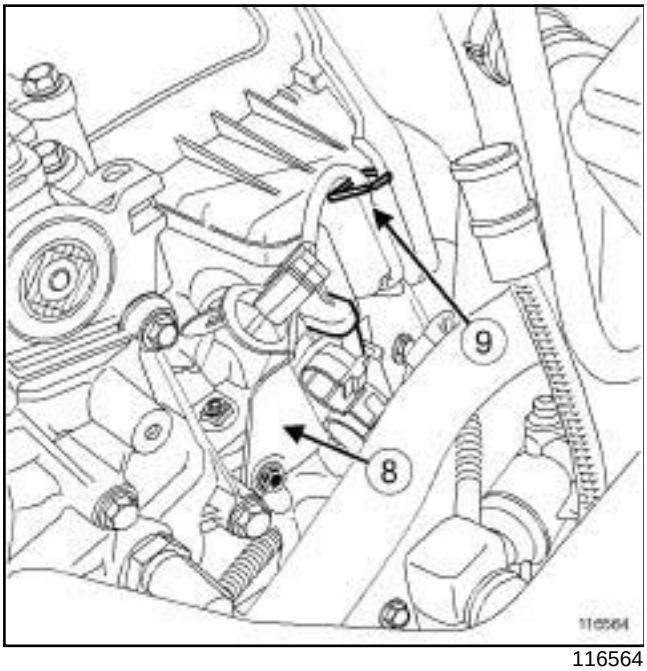

116564

❑ Remove the coolant pipes mounting bracket (**8**) .

❑ Unpick the electrical wiring (**9**) from the oxygen sensor.

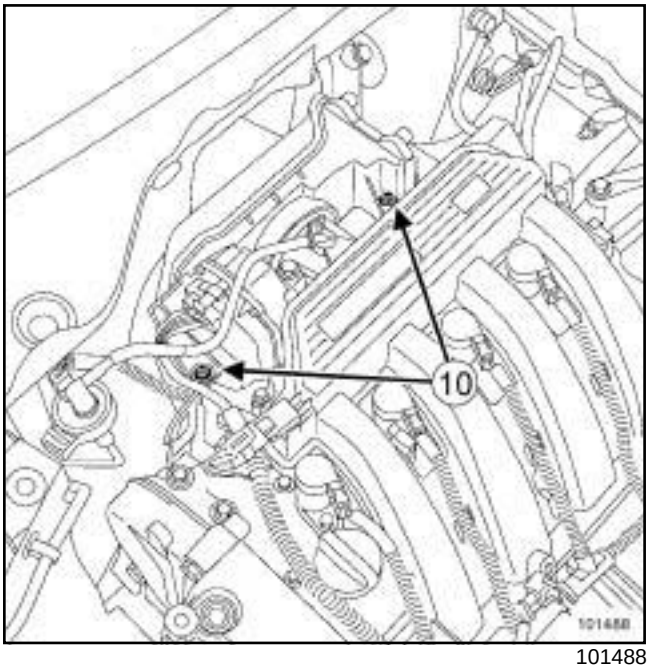

101488

❑ Remove the two bolts (**10**) from the air filter unit.

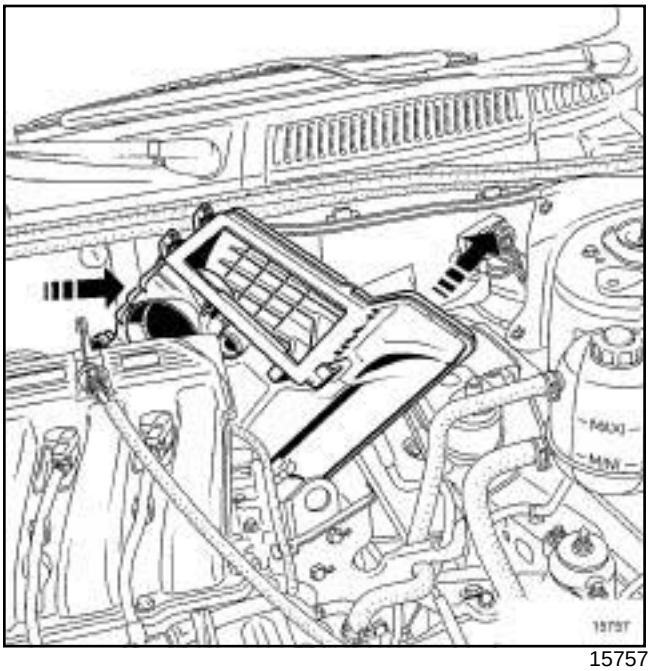

15757

❑ Remove the air filter unit.

REFITTING

I - REFITTING PREPARATION OPERATION

❑ Replace:

- the throttle valve seal each time it is removed using grease to make fitting easier,

- the plastic rivets and clips every time they are removed.

II - REFITTING OPERATION

❏ Refit:

- the air filter unit,
- the two air filter unit bolts.

❏ Torque tighten the **air filter unit bolts (9 N.m)**.

❏ Attach the electrical wiring to the oxygen sensor.

❏ Refit the coolant pipes mounting bracket.

❏ Reclip:

- the breather,
- the coolant pipes.

❏ Refit:

- the filter element,
- the two air filter cover bolts.

❏ Reconnect:

- the brake servo vacuum pipe on the inlet distributor,
- the petrol vapour recirculation pipe,
- the throttle position potentiometer connector,
- the idle speed regulation stepping motor connector.

III - FINAL OPERATION

❏ Refit the air resonator (see **12A**, **Fuel mixture**, **Air resonator: Removal - Refitting**, page **12A-2**) .

❏ Connect the battery (see **Battery: Removal - Refitting**) (80A, Battery).

K9K, and 796

REMOVAL

I - REMOVAL PREPARATION OPERATION

❑ Remove the engine cover.

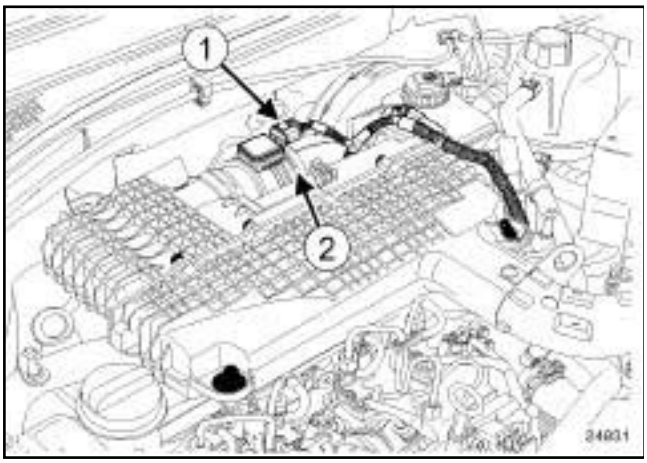

24831

❑ Disconnect the air flowmeter connector (**1**) .

❑ Undo the clip (**2**) from the air flowmeter outlet duct.

❑ Remove the air flowmeter outlet air duct.

❑ Remove the air flowmeter outlet air duct.

II - REMOVAL OPERATION FOR PART CONCERNED

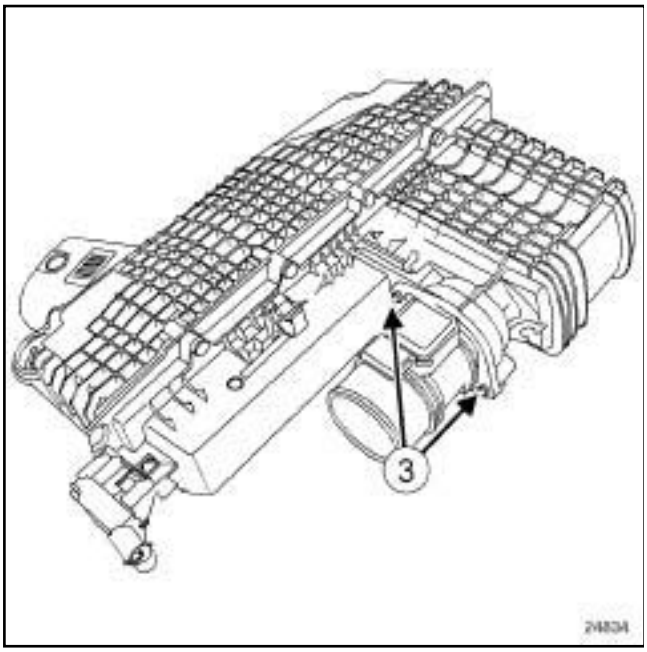

24834

❑ Remove:

- the air flowmeter (**3**) bolts on the air filter box,
- the air flowmeter,
- the air flowmeter seal.

REFITTING

I - REFITTING PREPARATION OPERATION

❑ Always replace the air flowmeter seal on the air filter unit.

II - REFITTING OPERATION FOR PART CONCERNED

❑ Refit:

- a new air flowmeter seal on the air filter box,
- the air flowmeter,
- the air flowmeter bolts.

III - FINAL OPERATION

❑ Refit:

- the air flowmeter outlet air duct,
- the air flowmeter outlet air duct clip.

❑ Connect the air flowmeter connector.

❑ Refit the engine cover.

K4M

Tightening torques ▽	
throttle valve bolts	**13 N.m**

REMOVAL

I - REMOVAL PREPARATION OPERATION

❑ Disconnect the battery (see **Battery: Removal - Refitting**) (80A, Battery).

❑ Remove the air filter unit (see **12A**, **Fuel mixture**, **Air filter unit: Removal - Refitting**, page **12A-6**) .

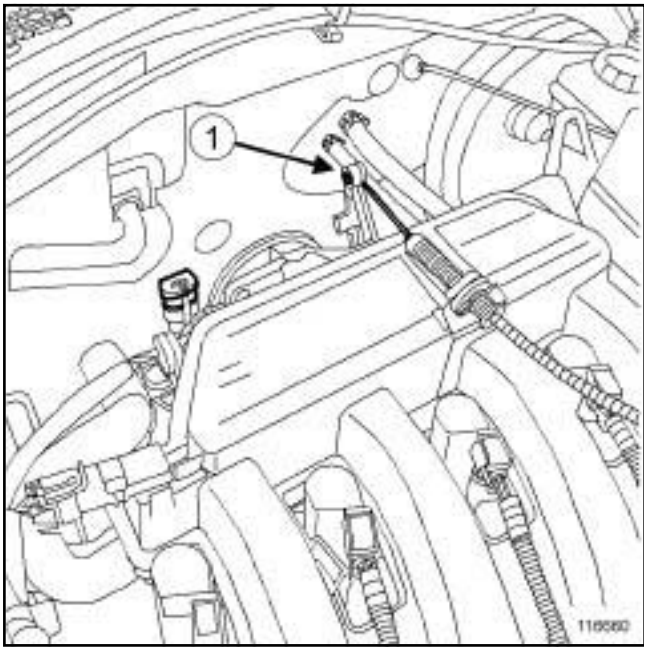

116660

❑ Disconnect the accelerator cable at (**1**) .

II - OPERATION FOR REMOVAL OF PART CONCERNED

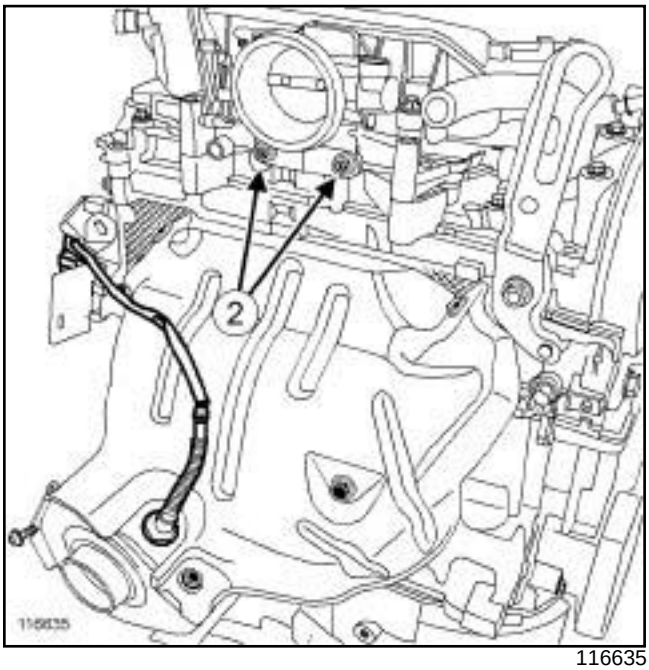

116635

❑ Remove:

- the throttle valve bolts (**2**) ,
- the throttle valve.

REFITTING

I - REFITTING PREPARATION OPERATION

❑ **parts always to be replaced: Throttle valve seal**.

II - REFITTING OPERATION

❑ Refit:

- the throttle valve equipped with a new seal,
- the throttle valve bolts.

❑ Torque tighten the **throttle valve bolts (13 N.m)**.

III - FINAL OPERATION

❑ Reattach the accelerator cable.

❑ Refit the air filter unit (see **12A**, **Fuel mixture**, **Air filter unit: Removal - Refitting**, page **12A-6**) .

❑ Connect the battery (see **Battery: Removal - Refitting**) (80A, Battery).

K4M

Tightening torques ▽	
intake distributor mounting bolts	**9 N.m**

REMOVAL

I - REMOVAL PREPARATION OPERATION

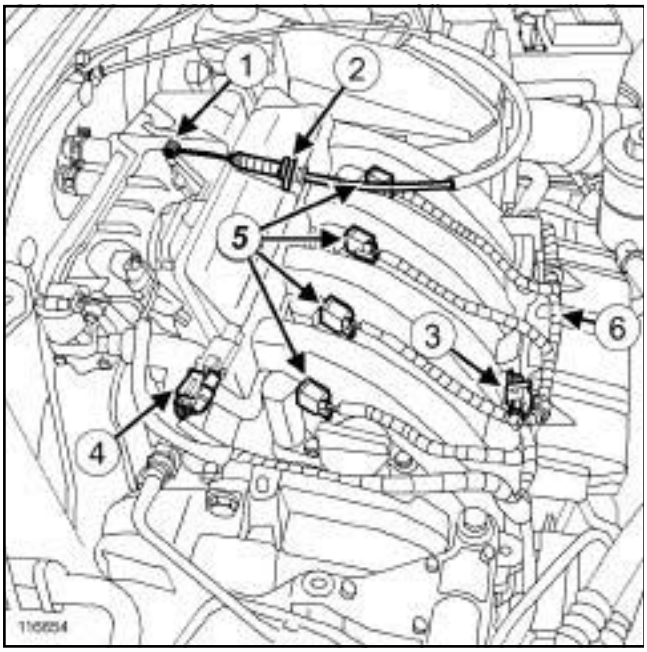

116654

- ❑ Disconnect the accelerator cable on the throttle valve at (**1**) .
- ❑ Remove the accelerator cable (**2**) from the inlet distributor.
- ❑ Disconnect:
  - the air temperature sensor connector (**3**) ,
  - the air inlet pressure sensor connector (**4**) ,
  - the connectors (**5**) from the coils.
- ❑ Unclip the wiring (**6**) on the inlet distributor.
- ❑ Move the wiring aside.
- ❑ Remove the throttle valve (see **12A**, **Fuel mixture**, **Throttle valve: Removal - Refitting**, page **12A-11**) .

II - OPERATION FOR REMOVAL OF PART CONCERNED

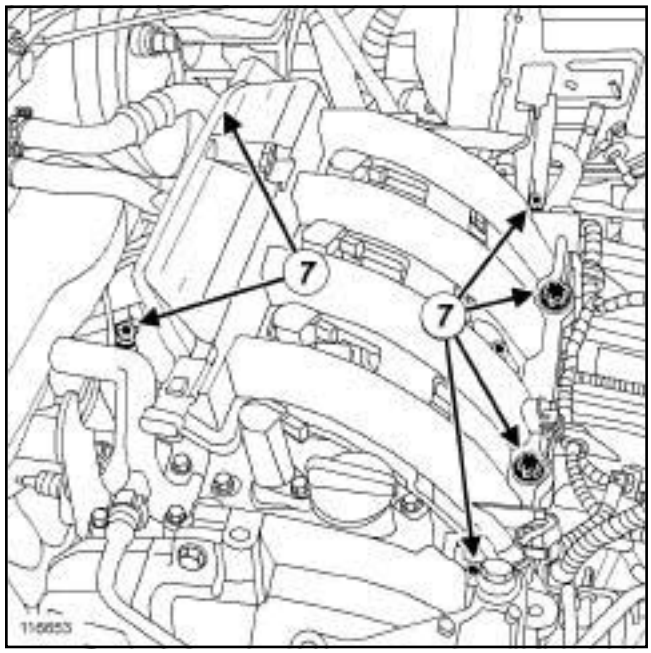

116653

- ❑ Remove:
  - the inlet distributor bolts (**7**) ,
  - the inlet distributor.
- ❑ When replacing the inlet distributor, remove:
  - the air temperature sensor,
  - the inlet air pressure sensor.

REFITTING

I - REFITTING PREPARATION OPERATION

- ❑ **parts always to be replaced: inlet distributor seal**.

K4M

❑

WARNING
Do not scrape the joint faces of the aluminium, any damage caused to the joint face will result in a risk of leaks.

WARNING
To ensure proper sealing, the gasket surfaces must be clean, dry and not greasy (avoid any finger marks).

Use **SURFACE CLEANER** (see **Vehicle: Parts and consumables for the repair**) (04B, Consumables - Products) to clean and degrease:

- the housing of each inlet distributor seal if reused,
- the joint face of the injector holder shim.

❑ Fit new seals to the inlet distributor.

❑ When replacing the inlet distributor, refit:

- the air temperature sensor,
- the inlet distributor pressure sensor.

II - REFITTING OPERATION FOR PART CONCERNED

❑ Refit:

- the inlet distributor,
- the inlet distributor mounting bolts.

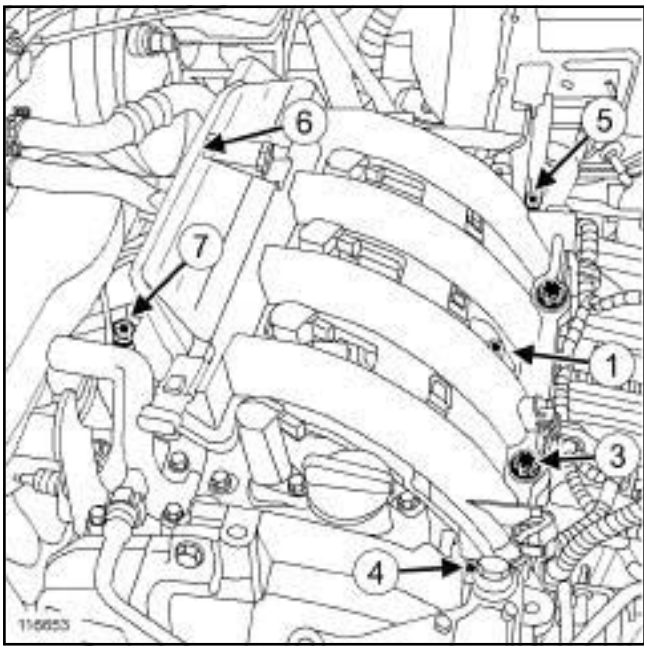

116653

❑ Torque tighten in order the **intake distributor mounting bolts (9 N.m)**.

III - FINAL OPERATION

❑ Refit the throttle valve equipped with a new seal (see **12A**, **Fuel mixture**, **Throttle valve: Removal - Refitting**, page **12A-11**) .

❑ Clip the wiring onto the inlet distributor.

❑ Connect:

- the coil connectors,
- the air inlet pressure sensor connector,
- the air temperature sensor connector.

❑ Position the accelerator cable on the inlet distributor and on the throttle valve.

K4M

Tightening torques ▽	
injector holder shim bolts (7) and (8)	**25 N.m**
injector holder shim bolts 9 to 16	**21 N.m**
upper timing cover bolt	**41 N.m**
suspended mounting bolt	**62N.m**

REMOVAL

I - REMOVAL PREPARATION OPERATION

❑ Disconnect the battery (see **Battery: Removal - Refitting**) (80A, Battery).

❑ Remove:

- the inlet distributor (see **12A**, **Fuel mixture**, **Inlet distributor: Removal - Refitting**, page **12A-12**) ,
- the injector rail (see **17B**, **Petrol injection**, **Injector rail - Injectors: Removal - Refitting**, page **17B-10**) ,
- the multifunction support (see **10A**, **Engine and cylinder block assembly**, **Multifunction support: Removal - Refitting**, page **10A-48**) .

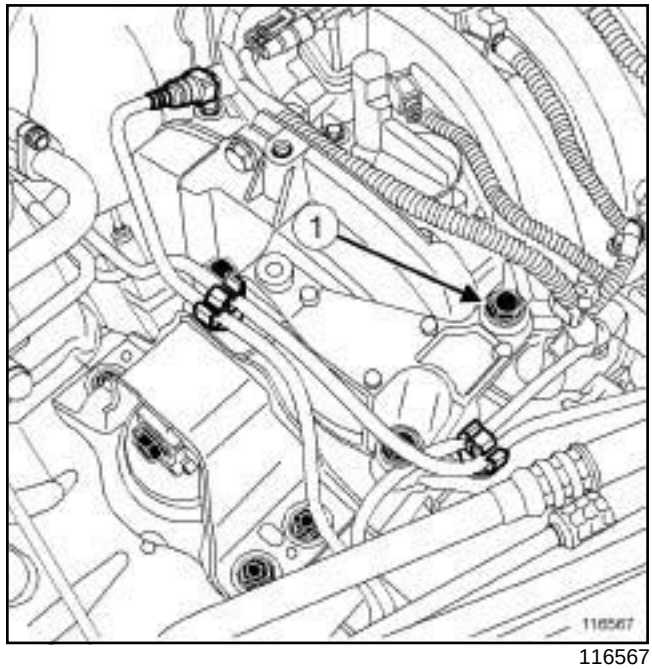

116567

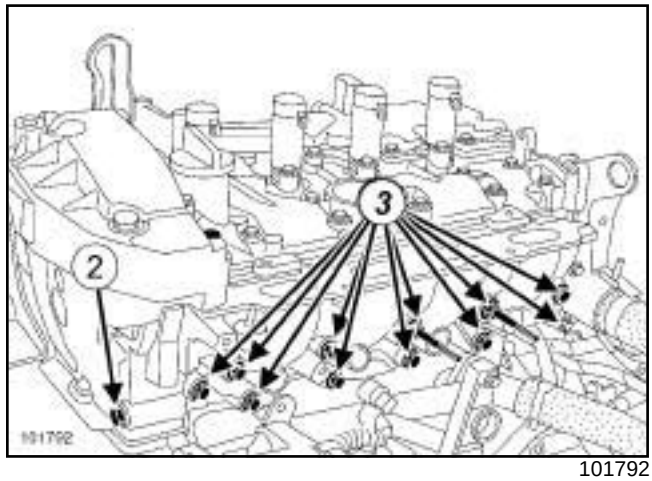

101792

❑ Remove:

- the bolt (**1**) of the suspended mounting on the injector holder shim,
- the bolt (**2**) mounting the upper timing cover on the injector holder shim.

II - REMOVAL OPERATION

❑ Remove:

- the bolts ***(3)*** from the injector holder shim,
- the injector holder shim.

K4M

REFITTING

I - REFITTING PREPARATION OPERATION

❑ The injector holder shim seal must always be replaced.

II - REFITTING OPERATION

❑ Fit:

- the injector holder shim,
- all the injector holder shim bolts.

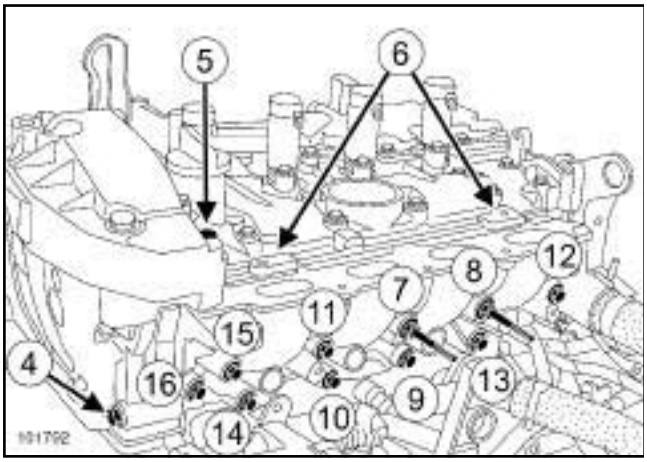

101792

❑ Place the injector holder shim against:

- the upper timing cover by manually tightening the bolt (**4**) ,
- the suspended engine mounting by manually tightening the bolt (**5**) .

❑ Position the injector holder shim against the shims (**6**) on the rocker cover.

❑ Tighten to torque and in order:

- the **injector holder shim bolts (7) and (8) (25 N.m)**,
- the **injector holder shim bolts 9 to 16 (21 N.m)**.

III - FINAL OPERATION

❑ Torque tighten:

- the **upper timing cover bolt (41 N.m)**,
- the **suspended mounting bolt (62N.m)**.

❑ Refit:

- the multifunction support (see **10A**, **Engine and cylinder block assembly**, **Multifunction support: Removal - Refitting**, page **10A-48**) ,
- the injector rail (see **17B**, **Petrol injection**, **Injector rail - Injectors: Removal - Refitting**, page **17B-10**) ,
- the inlet distributor (see **12A**, **Fuel mixture**, **Inlet distributor: Removal - Refitting**, page **12A-12**) .

❑ Connect the battery (see **Battery: Removal - Refitting**) (80A, Battery).

K9K

Tightening torques ▽	
exhaust manifold stud	**9 N.m**
exhaust manifold nuts	**26 N.m**

REMOVAL

I - REMOVAL PREPARATION OPERATION

❏ Position the vehicle on a two-post lift (see **Vehicle: Towing and lifting**) (02A, Lifting equipment).

❏ Disconnect the battery (see **Battery: Removal - Refitting**) (80A, Battery).

❏ Remove:

- the air filter unit (see **12A**, **Fuel mixture**, **Air filter unit: Removal - Refitting**, page **12A-6**) ,
- the engine undertray,
- the catalytic converter (see **19B**, **Exhaust**, **Catalytic converter: Removal - Refitting**, page **19B-10**) ,
- the exhaust gas recirculation assembly (see **14A**, **Antipollution**, **Exhaust gas recirculation assembly: Removal - Refitting**, page **14A-9**) ,
- the turbocharger (see **12B**, **Turbocharging**, **Turbocharger: Removal - Refitting**, page **12B-1**) .

II - REMOVAL OPERATION

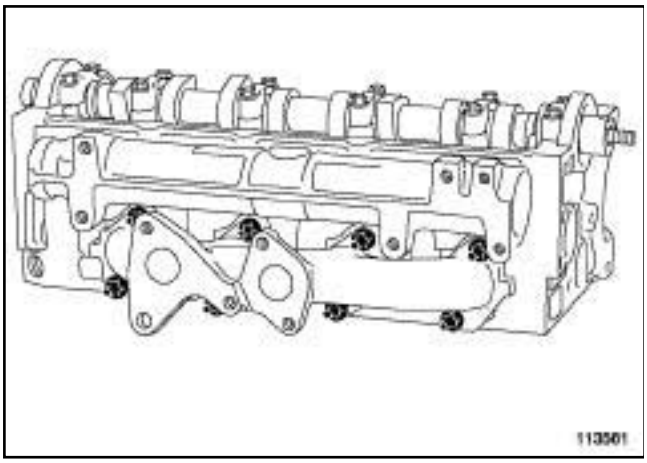

113561

❏ Remove:

- the exhaust manifold nuts,
- the exhaust manifold.

❏ Mark the position of the exhaust manifold gasket.

❏ Remove the exhaust manifold gasket.

REFITTING

I - REFITTING PREPARATION OPERATION

❏ **parts always to be replaced: exhaust manifold seal**.

❏ Use **GREY ABRASIVE PADS** (see **Vehicle: Parts and consumables for the repair**) (04B, Consumables - Products) to clean the joint face:

- the cylinder head,
- of the exhaust manifold, if it is to be reused.

❏ Use **SURFACE CLEANER** (see **Vehicle: Parts and consumables for the repair**) (04B, Consumables - Products) and **CLEAN CLOTHS** to clean and degrease the joint faces:

- the cylinder head,
- of the exhaust manifold, if it is to be reused.

> Note:
>
> If a stud is loosened during this operation, coat the stud with **HIGH RESISTANCE THREAD LOCK** (see **Vehicle: Parts and consumables for the repair**) (04B, Consumables - Products).

❏ Torque tighten the **exhaust manifold stud (9 N.m)**.

II - REFITTING OPERATION

❏ Refit:

- a new exhaust manifold gasket in the position marked during removal,
- the exhaust manifold.

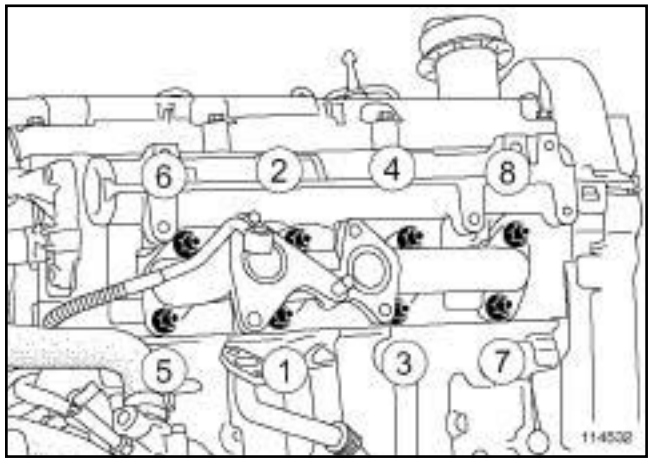

114532

❏ Torque tighten in order the **exhaust manifold nuts (26 N.m)**.

K9K

III - FINAL OPERATION

❑ Refit:

- the turbocharger (see **12B**, **Turbocharging**, **Turbocharger: Removal - Refitting**, page **12B-1**) ,
- the exhaust gas recirculation assembly (see **14A**, **Antipollution**, **Exhaust gas recirculation assembly: Removal - Refitting**, page **14A-9**) ,
- the catalytic converter (see **19B**, **Exhaust**, **Catalytic converter: Removal - Refitting**, page **19B-10**) ,
- the engine undertray,
- the air filter unit (see **12A**, **Fuel mixture**, **Air filter unit: Removal - Refitting**, page **12A-6**) .

❑ Connect the battery (see **Battery: Removal - Refitting**) (80A, Battery).

K4M

Tightening torques ▽	
exhaust manifold studs	**8 N.m**
exhaust manifold mounting nuts	**23 N.m**
bolts (6) mounting the stay on the cylinder block	**21 N.m**
nut (7) mounting the stay on the exhaust manifold	**21 N.m**
exhaust manifold upper heat shield mounting bolts	**12 N.m**
upstream oxygen sensor	**45 N.m**
exhaust bracket mounting bolts	**21 N.m**

REMOVAL

I - REMOVAL PREPARATION OPERATION

❑ Position the vehicle on a two-post lift (see **Vehicle: Towing and lifting**) (02A, Lifting equipment).

❑ Disconnect the battery (see **Battery: Removal - Refitting**) (80A, Battery).

❑ Remove:

- the air resonator (see **12A**, **Fuel mixture**, **Air resonator: Removal - Refitting**, page **12A-2**) ,
- the air filter unit (see **12A**, **Fuel mixture**, **Air filter unit: Removal - Refitting**, page **12A-6**) .

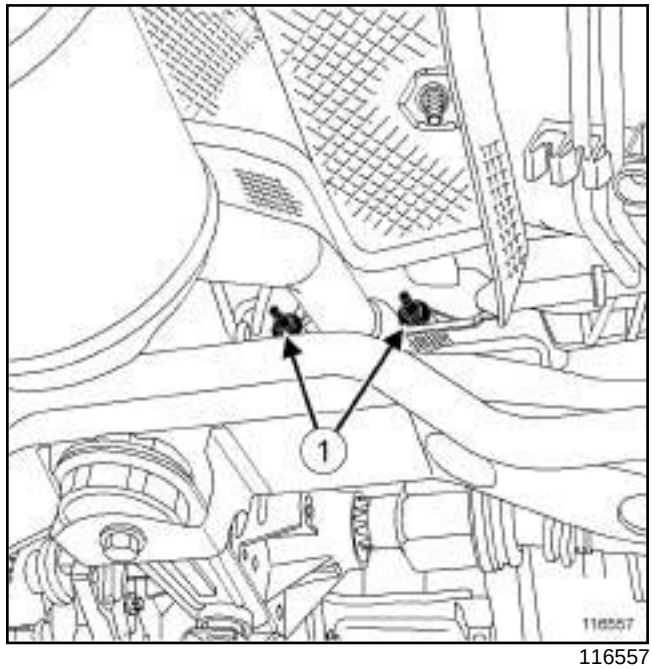

116557

❑ Remove the nuts (**1**) from the exhaust flange.

❑ Push the exhaust pipe towards the rear of the vehicle.

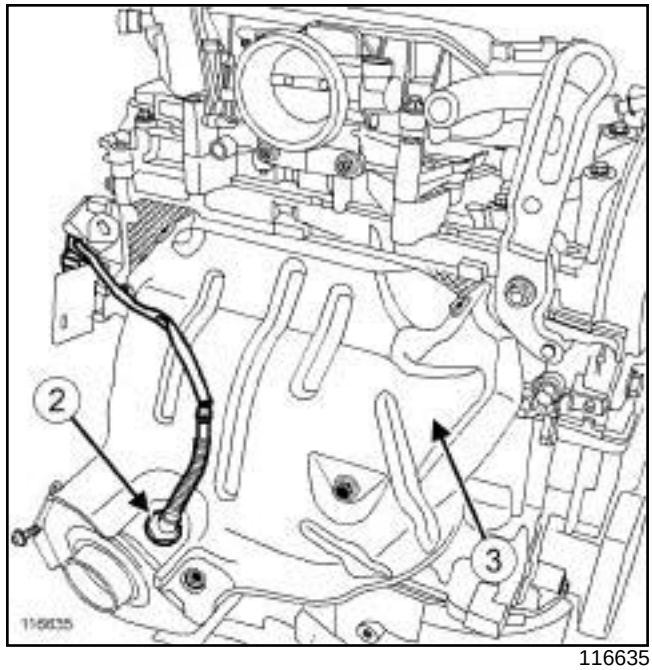

116635

❑ Disconnect the upstream oxygen sensor connector (**2**) .

❑ Remove:

- the upstream oxygen sensor using the,
- the upper heat shield (**3**) from the exhaust manifold.

K4M

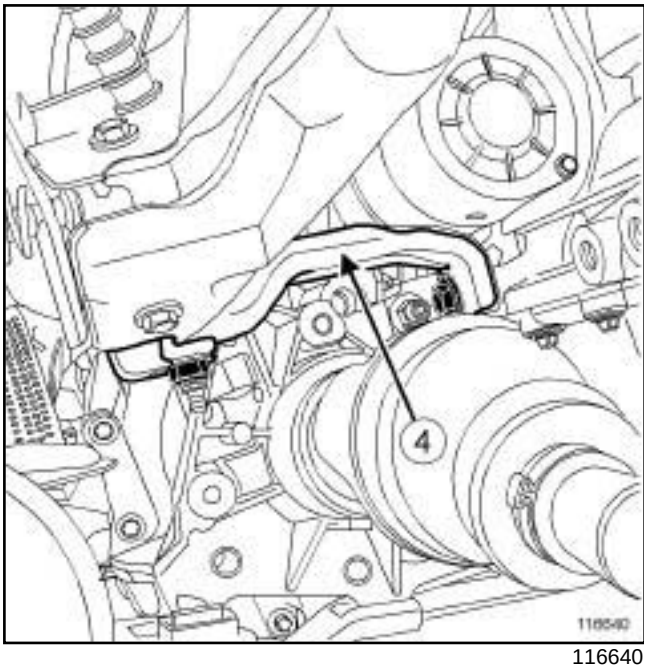

116640

❑ Remove the stay (**4**) between the exhaust manifold and the cylinder block.

II - REMOVAL OPERATION

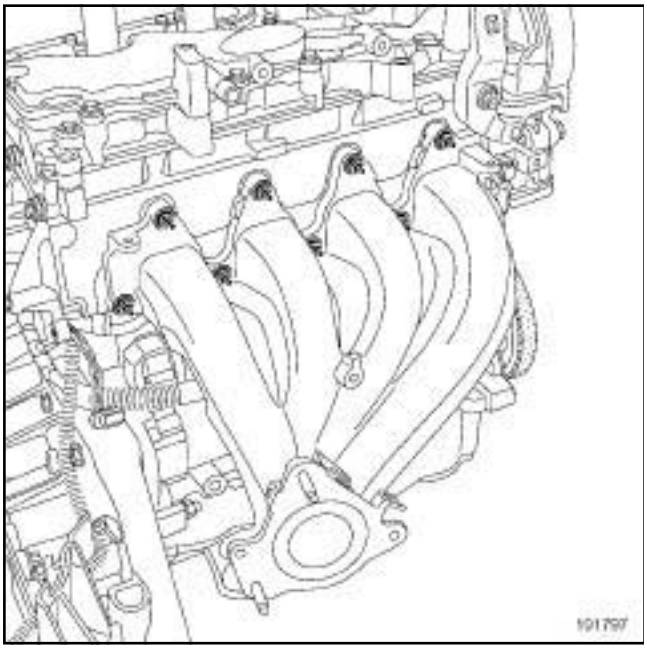

101797

❑ Remove:

- the exhaust manifold nuts,
- the exhaust manifold.

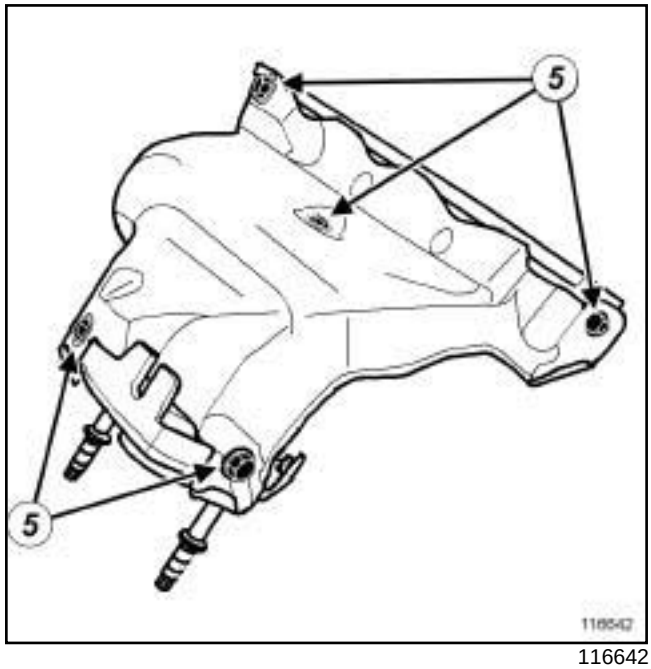

116642

❑ Using the workbench, remove:

- the bolts (**5**) from the exhaust manifold lower heat shield,
- the lower heat shield from the exhaust manifold.

REFITTING

I - REFITTING PREPARATION OPERATION

❑ **parts always to be replaced: exhaust manifold seal**.

❑ **parts always to be replaced: ring between exhaust manifold and catalytic converter**.

❑ Use **SURFACE CLEANER** (see **Vehicle: Parts and consumables for the repair**) (04B, Consumables - Products) to clean and degrease:

- the exhaust manifold joint face if it is to be re-used,
- the cylinder head joint face.

> Note:
>
> If a stud loosens during removal, coat it with **HIGH RESISTANCE THREADLOCK** (see **Vehicle: Parts and consumables for the repair**) (04B, Consumables - Products).

❑ Tighten to torque the **exhaust manifold studs (8 N.m)**.

K4M

II - REFITTING OPERATION FOR PART CONCERNED

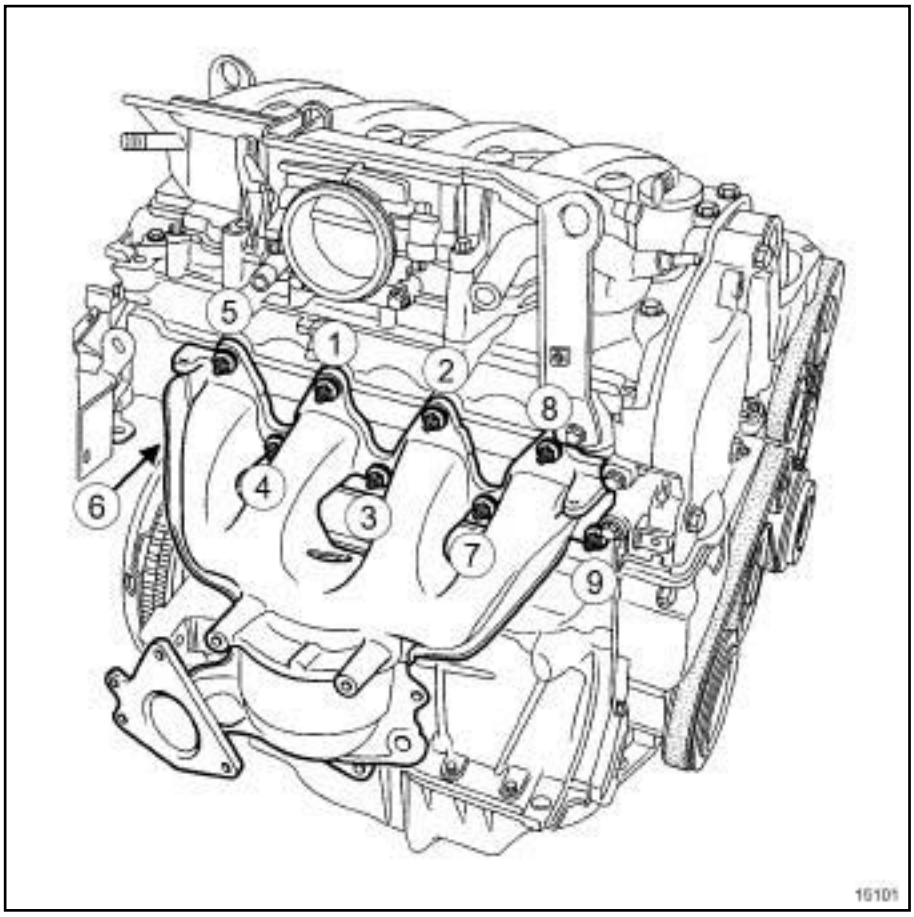

15101

- ❑ Refit the exhaust manifold.
- ❑ Tighten to torque and in order the **exhaust manifold mounting nuts (23 N.m)**.

K4M

III - FINAL OPERATION

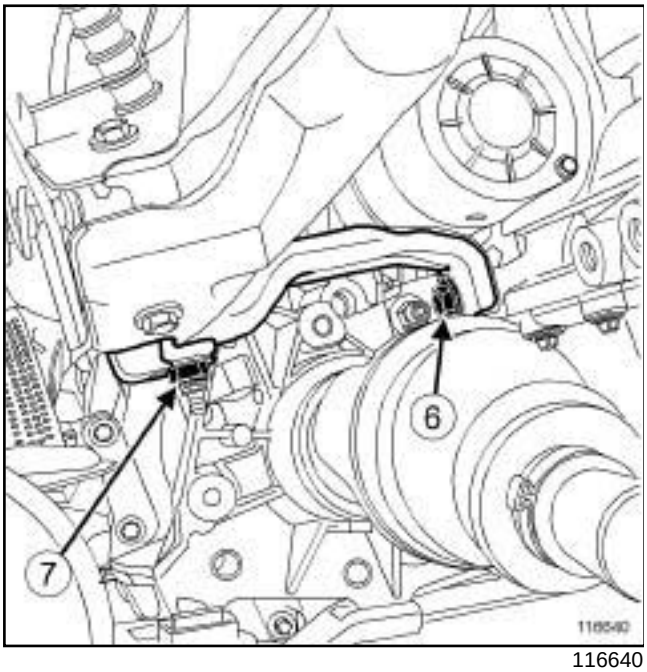

116640

- ❑ Refit the stay between the exhaust manifold and the cylinder block.
- ❑ Tighten to torque and in order:
  - the **bolts (6) mounting the stay on the cylinder block (21 N.m)**,
  - the **nut (7) mounting the stay on the exhaust manifold (21 N.m)**.
- ❑ Refit the exhaust manifold upper heat shield.
- ❑ Torque tighten the **exhaust manifold upper heat shield mounting bolts (12 N.m)**.
- ❑ Refit the upstream oxygen sensor using the.
- ❑ Torque tighten the **upstream oxygen sensor (45 N.m)**.
- ❑ Connect the upstream oxygen sensor connector.
- ❑ Refit the exhaust bracket mounting bolts.
- ❑ Torque tighten the **exhaust bracket mounting bolts (21 N.m)**.
- ❑ Refit:
  - the air filter unit (see **12A**, **Fuel mixture**, **Air filter unit: Removal - Refitting**, page **12A-6**) ,
  - the air resonator (see **12A**, **Fuel mixture**, **Air resonator: Removal - Refitting**, page **12A-2**) .
- ❑ Connect the battery (see **Battery: Removal - Refitting**) (MR 388, 80A, Battery).

K9K

Equipment required
Diagnostic tool

Tightening torques ▽	
new turbocharger studs on the exhaust manifold	**9 N.m**
new turbocharger stud on the turbocharger	**9 N.m**
turbocharger nuts	**28 N.m**

IMPORTANT
Wear leaktight gloves (Nitrile type) for this operation.

REMOVAL

I - REMOVAL PREPARATION OPERATION

❑ Position the vehicle on a two-post lift (see **Vehicle: Towing and lifting**) (02, Lifting equipment).

❑ Disconnect the battery (see **Battery: Removal - Refitting**) (80A, Battery).

❑ Remove:

- the engine cover,
- the air filter unit (see **12A**, **Fuel mixture**, **Air filter unit: Removal - Refitting**, page **12A-6**) .

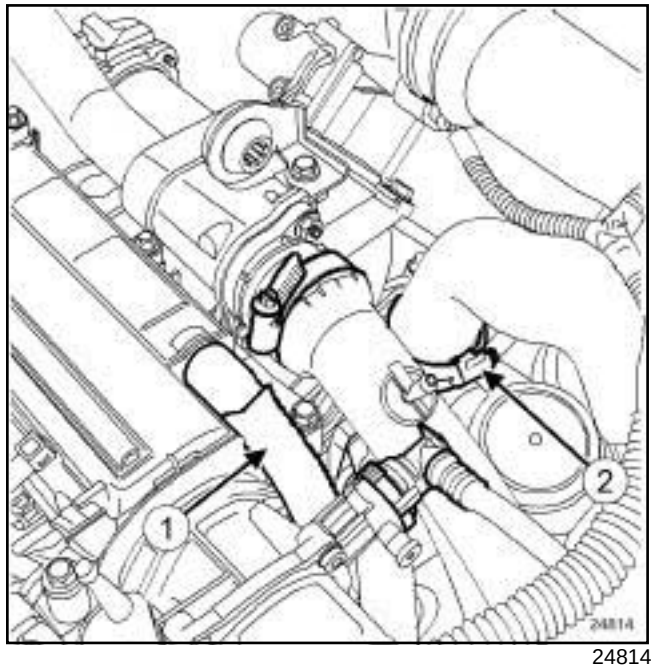

24814

❑ Disconnect:

- the oil vapour rebreathing pipe (**1**) ,
- the duct between the turbocharger and the intercooler at (**2**) .

❑ Remove:

- the exhaust gas recirculation solenoid valve (see **14A**, **Antipollution**, **Exhaust gas recirculation solenoid valve: Removal - Refitting**, page **14A-4**) ,
- the air duct between the turbocharger and the air filter unit,
- the engine undertray,
- the catalytic converter (see **19B**, **Exhaust**, **Catalytic converter: Removal - Refitting**, page **19B-10**) .

K9K

II - REMOVAL OPERATION

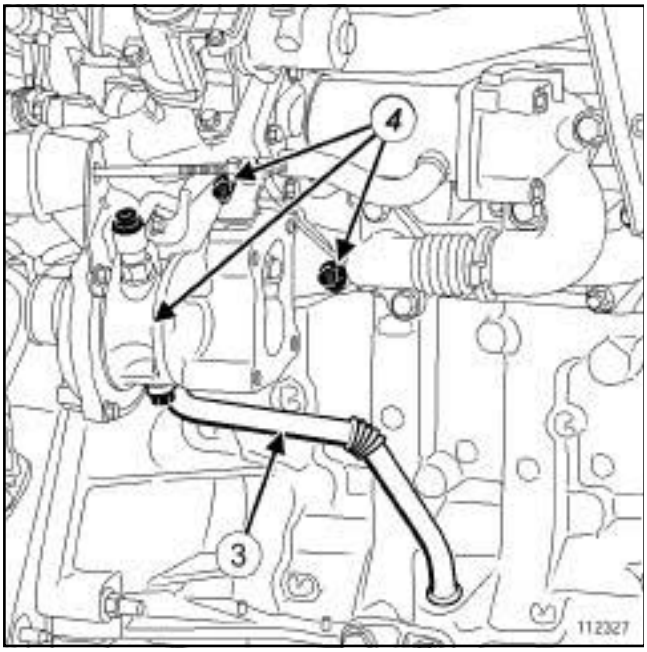

112327

❑ Remove (see **12B**, **Turbocharging**, **Turbocharger oil pipe: Removal - Refitting**, page **12B-4**) :

- the turbocharger oil return pipe (**3**) ,
- the turbocharger oil supply pipe.

❑ Remove:

- the nuts (**4**) from the turbocharger on the exhaust manifold,
- the turbocharger,
- the turbocharger seal.

REFITTING

I - REFITTING PREPARATION OPERATION

❑ **parts always to be replaced: Turbocharger nut**.

❑ **parts always to be replaced: seal between exhaust manifold and turbocharger**.

❑ **parts always to be replaced: exhaust manifold stud on the turbocharger (if loosened)**.

> **WARNING**
> Ensure that no foreign bodies enter the turbine or compressor during the refitting operation.
>
> Check that the turbocharger oil return pipe is not partially or completely blocked by scale. Check that there are no leaks. If there are, replace the part.

> **WARNING**
> Following a turbocharger fault, check that the intercooler and air circuit assembly are not full of oil. If they are, remove them and clean them with a cleaning tray or station and dry them with a compressed air gun.

❑ Use **GREY ABRASIVE PADS** (see **Vehicle: Parts and consumables for the repair**) (04B, Consumables - Products) to clean:

- the exhaust manifold joint face,
- the turbocharger gasket face if reused.

❑ Use **SURFACE CLEANER** (see **Vehicle: Parts and consumables for the repair**) (04B, Consumables - Products) to clean and degrease:

- the exhaust manifold joint face,
- the turbocharger joint face if it is to be reused,
- the housing of the turbocharger air outlet pipe seal,
- the joint face of the exhaust gas cooler mounting on the gearbox end.

> **WARNING**
> To ensure proper sealing, the gasket surfaces must be clean, dry and not greasy (avoid any finger marks).

❑ Torque tighten:

- the **new turbocharger studs on the exhaust manifold (9 N.m)**,
- the **new turbocharger stud on the turbocharger (9 N.m)**.

II - REFITTING OPERATION

❑ Refit:

- a new turbocharger seal on the exhaust manifold,
- the turbocharger.

K9K

- ❑ Use an open wrench to fit the new turbocharger nuts without tightening them (the turbocharger must be in contact with the manifold and the wrench should no longer turn without effort).
- ❑ Torque tighten the **turbocharger nuts (28 N.m)**.

III - FINAL OPERATION

- ❑ Refit (see **12B**, **Turbocharging**, **Turbocharger oil pipe: Removal - Refitting**, page **12B-4**) :
  - the turbocharger oil return pipe,
  - the turbocharger oil supply pipe.
- ❑ Refit:
  - the catalytic converter (see **19B**, **Exhaust**, **Catalytic converter: Removal - Refitting**, page **19B-10**)
  - the engine undertray,
  - the air duct between the turbocharger and the air filter unit,
  - the exhaust gas recirculation solenoid valve (see **14A**, **Antipollution**, **Exhaust gas recirculation solenoid valve: Removal - Refitting**, page **14A-4**)
- ❑ Connect:
  - the duct between the turbocharger and the intercooler onto the turbocharger,
  - the oil vapour rebreathing pipe .
- ❑ Refit:
  - the air filter unit (see **12A**, **Fuel mixture**, **Air filter unit: Removal - Refitting**, page **12A-6**) ,
  - the engine cover.
- ❑ Connect the battery (see **Battery: Removal - Refitting**) (80A, Battery).

Check

- ❑ Disconnect the flow actuator connector (engine starting inhibition).
- ❑ Run the starter motor until the oil pressure warning light goes out (wait for a few seconds).
- ❑ Switch off the ignition.
- ❑ Reconnect the fuel flow actuator connector.
- ❑ Make sure that there are no oil leaks.
- ❑ Connect the **Diagnostic tool** and clear the stored faults.

K9K

Equipment required
self-contained starter
Diagnostic tool

Tightening torques ▽	
new turbocharger oil supply pipe hollow bolt to the turbocharger	**Torx bolt 18 N.m or Hexagonal bolt 14 N.m**
turbocharger oil supply pipe nut on the cylinder head	**shouldered nut 35 N.m or non-shouldered nut 23 N.m**
turbocharger oil return pipe bolts	**12 N.m**

IMPORTANT
Wear leaktight gloves (Nitrile type) for this operation.

IMPORTANT
Wear cut-resistant gloves during the operation.

WARNING
Ensure that no foreign bodies enter the turbine or compressor during the refitting operation.

Check that the turbocharger oil return pipe is not partially or completely blocked by scale. Check that there are no leaks. If there are, replace the part.

WARNING
Metal objects may enter the oil and air circuits as a result of a broken turbocharger.

Failure to observe the following instructions will lead to the turbocharger breaking again.

Note:
This procedure deals with removing and refitting the turbocharger oil return pipe and the turbocharger oil supply pipe.

REMOVING THE TURBOCHARGER OIL SUPPLY PIPE

I - REMOVAL PREPARATION OPERATION

❑ Disconnect the battery (see **Battery: Removal - Refitting**) (80A, Battery).

❑ Remove:

- the engine cover,
- the air filter unit (see **12A**, **Fuel mixture**, **Air filter unit: Removal - Refitting**, page **12A-6**) .

❑ Remove:

- the engine undertray,
- the catalytic converter (see **19B**, **Exhaust**, **Catalytic converter: Removal - Refitting**, page **19B-10**) .

II - REMOVAL OPERATION

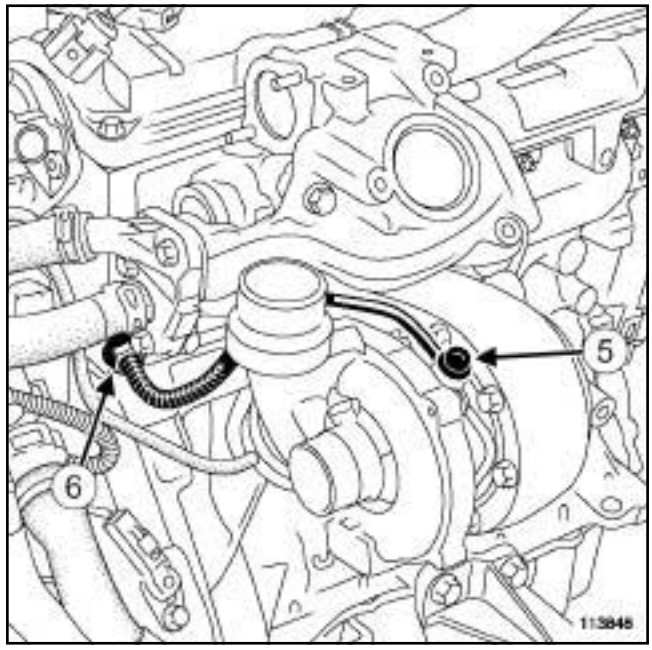

113848

❑ Loosen the nut (**6**) for the turbocharger oil supply pipe on the cylinder head, using the tool.

K9K

❑ Remove:

- the turbocharger oil supply pipe hollow boltfrom the turbocharger,
- the turbocharger oil supply pipe.

❑ Wipe away any oil run-off.

REFITTING THE TURBOCHARGER OIL SUPPLY PIPE

I - REFITTING PREPARATION OPERATION

❑ **parts always to be replaced: turbocharger oil supply pipe**

❑ **parts always to be replaced: turbocharger oil pipe seal**

❑ **parts always to be replaced: Turbocharger oil supply pipe bolt**

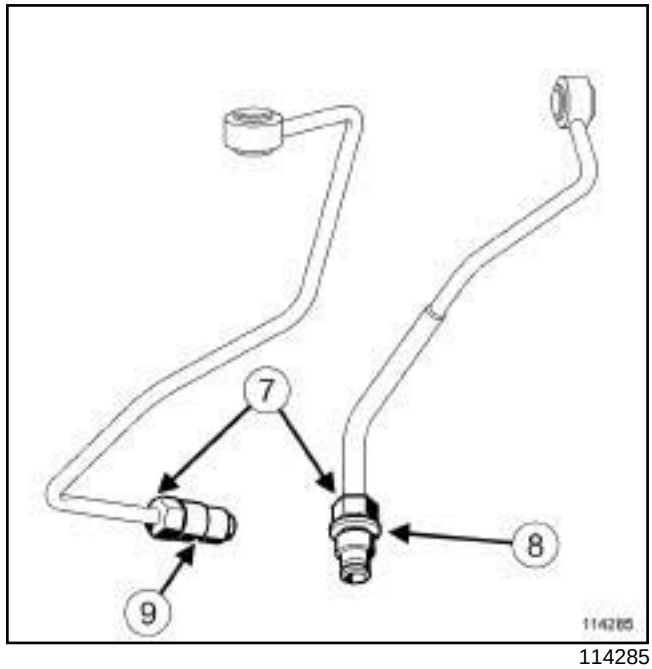

114285

❑

Note:

These two turbocharger oil supply pipes may be used on the same engine. The tightening torque of the end pieces (**7**) on the cylinder head is different, depending on the following:

- if the end piece is **shouldered** (**8**) ; in this case, there is no need to apply **HIGH RESISTANCE THREADLOCK** (see **Vehicle: Parts and consumables for the repair**) (04B, Consumables - Products) to the thread of the end piece,
- if the end piece is **not shouldered** (**9**) ; in this case, it is essential to apply **HIGH RESISTANCE THREADLOCK** (see **Vehicle: Parts and consumables for the repair**) (04B, Consumables - Products) to the thread of the end piece.

II - REFITTING OPERATION

❑ Refit a new turbocharger oil supply pipe.

❑ Fit the turbocharger oil supply pipe nut on the cylinder head, without tightening it.

❑ Refit a new hollow bolt for the turbocharger oil supply pipe on the turbocharger.

❑ Torque tighten:

- a **new turbocharger oil supply pipe hollow bolt to the turbocharger (Torx bolt 18 N.m or Hexagonal bolt 14 N.m)**,

- the **turbocharger oil supply pipe nut on the cylinder head (shouldered nut 35 N.m or non-shouldered nut 23 N.m)** using toolor tool.

III - FINAL OPERATION

❑ Refit:

- the catalytic converter (see **19B**, **Exhaust**, **Catalytic converter: Removal - Refitting**, page **19B-10**) ,
- the engine undertray.

❑ Refit:

- the air filter unit (see **12A**, **Fuel mixture**, **Air filter unit: Removal - Refitting**, page **12A-6**) ,
- the engine cover.

❑ Connect the battery (see **Battery: Removal - Refitting**) (80A, Battery).

❑ Disconnect the high pressure pump flow actuator connector and the connector for each diesel fuel injector in order to prevent the engine from starting.

❑ Connect a **self-contained starter**.

❑ Run the starter until the oil pressure warning light goes out on the instrument panel (wait for a few seconds).

❑ Switch off the ignition.

❑ Disconnect the **self-contained starter**.

❑ Connect the high pressure pump flow actuator connector and the connector for each diesel fuel injector.

❑ Start the engine.

❑ Let the engine idle then depress the accelerator several times with no load.

❑ Switch off the ignition.

❑ Check:

- that the turbocharger is operating correctly,
- that there are no oil leaks from the turbocharger.

❑ Use the **Diagnostic tool** to check for an absence of stored faults; deal with these and clear them as necessary.

REMOVING THE TURBOCHARGER OIL RETURN PIPE

❑ Position the vehicle on a two-post lift (see **Vehicle: Towing and lifting**) (02A, Lifting equipment).

❑ Disconnect the battery (see **Battery: Removal - Refitting**) (80A, Battery).

❑ Remove:

- the engine undertray bolts,
- the engine undertray,
- the catalytic converter (see **19B**, **Exhaust**, **Catalytic converter: Removal - Refitting**, page **19B-10**) .

REMOVAL OPERATION

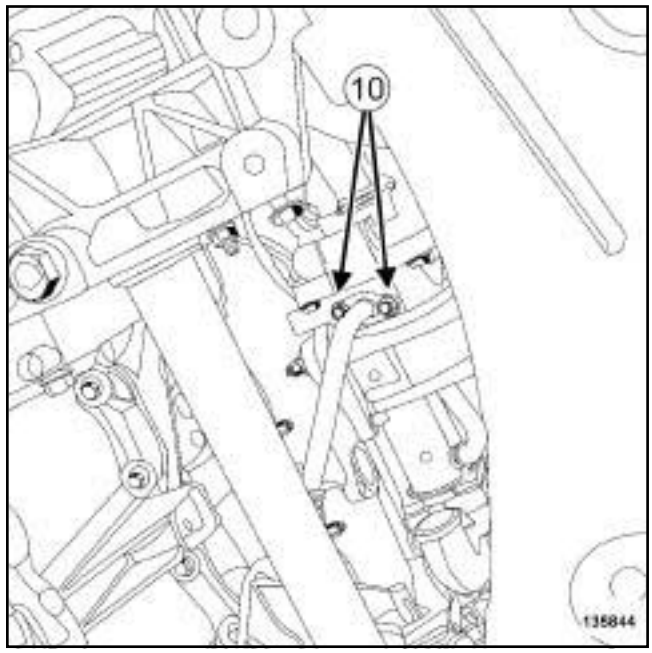

135844

❑ Remove the turbocharger oil return pipe bolts (**10**) .

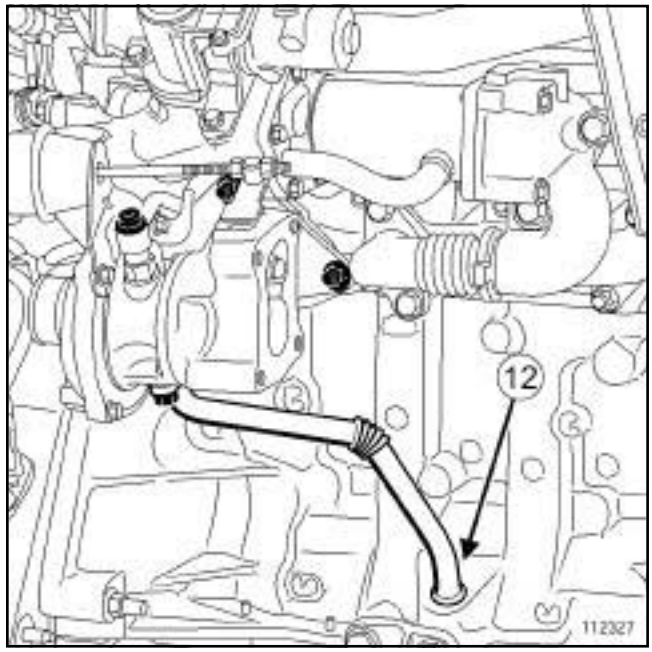

112327

❑ Rotate the turbocharger oil return pipe (**12**) to facilitate its removal.

K9K

- Extract the turbocharger oil return pipe from the cylinder block.
- Remove the turbocharger oil return pipe seals.

REFITTING THE TURBOCHARGER OIL RETURN PIPE

I - REFITTING PREPARATION OPERATION

- **parts always to be replaced: turbocharger oil pipe seal**.
- Use **SURFACE CLEANER** (see **Vehicle: Towing and lifting**) (04B, Consumables - Products) to clean and degrease:
  - the seal housing on the turbocharger oil return pipe if it is to be reused,
  - the turbocharger oil return pipe joint face if it is to be reused,
  - the turbocharger oil return pipe joint face on the turbocharger,
  - the turbocharger oil return pipe housing in the cylinder block.

> **WARNING**
> To ensure proper sealing, the gasket surfaces must be clean, dry and not greasy (avoid any finger marks).

- Lubricate the turbocharger oil return pipe O-ring with clean engine oil.

II - REFITTING OPERATION

- Proceed in the reverse order to removal.
- Torque tighten the **turbocharger oil return pipe bolts (12 N.m)**.

K9K

REMOVAL

I - REMOVAL PREPARATION OPERATION

❑ Position the vehicle on a two-post lift (see **Vehicle: Towing and lifting**) (02A, Lifting equipment).

❑ Disconnect the battery (see **Battery: Removal - Refitting**) (80A, Battery).

❑ Remove the front bumper (see **Front bumper assembly: Exploded view**) (55A, Exterior protection).

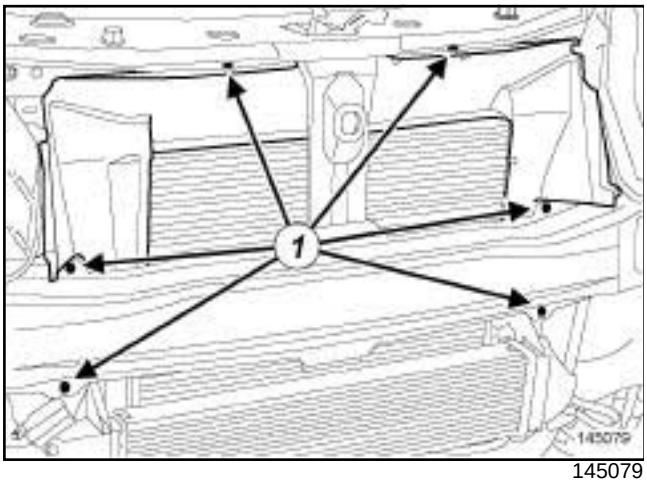

145079

❑ Remove:

- the air deflector mounting pins (**1**) ,
- the air deflector.

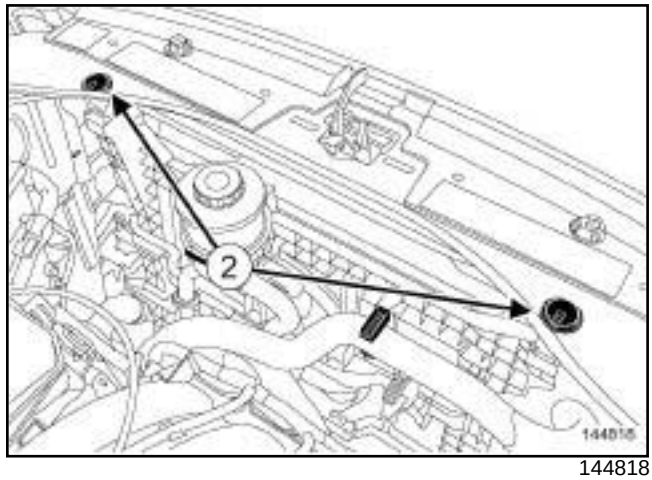

144818

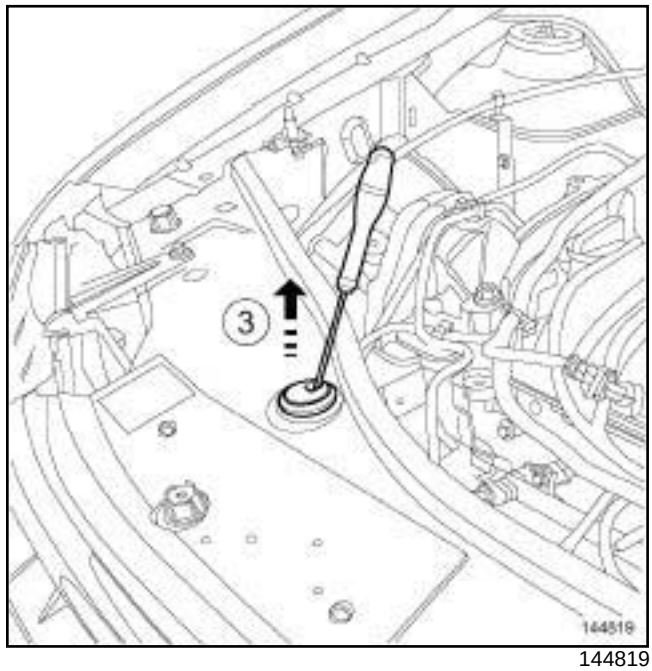

144819

❑ Press the clips of the fan assembly centring pins (**2**) using a screwdriver and pull them in the direction of the arrow (**3**) .

❑ Remove the fan assembly centring pins (**2**) .

II - REMOVAL OPERATION

❑

> Note:
>
> Do not damage the cooling unit vanes (radiator, condenser, etc.) during handling.

K9K

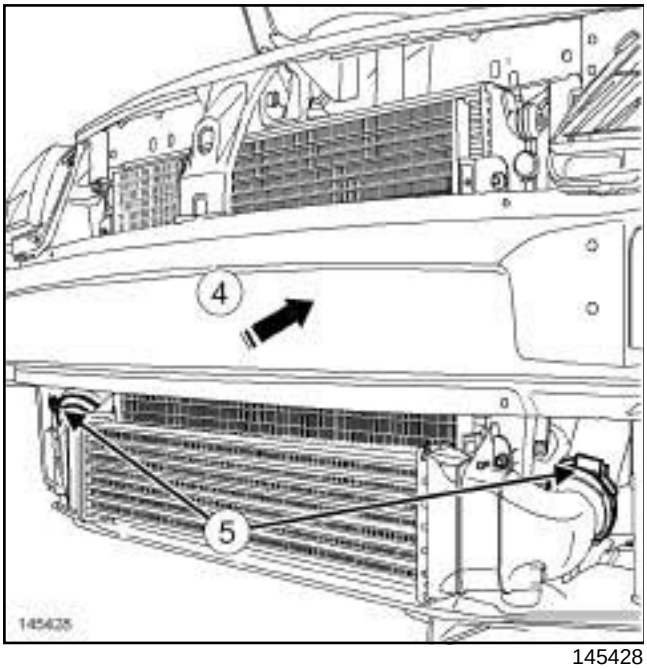

145428

❑ Push the « radiator - fan » assembly in the direction of the arrow (**4**) in order to remove the intercooler.

❑ Remove the clips (**5**) of the intercooler ducts.

❑ Disconnect the intercooler ducts.

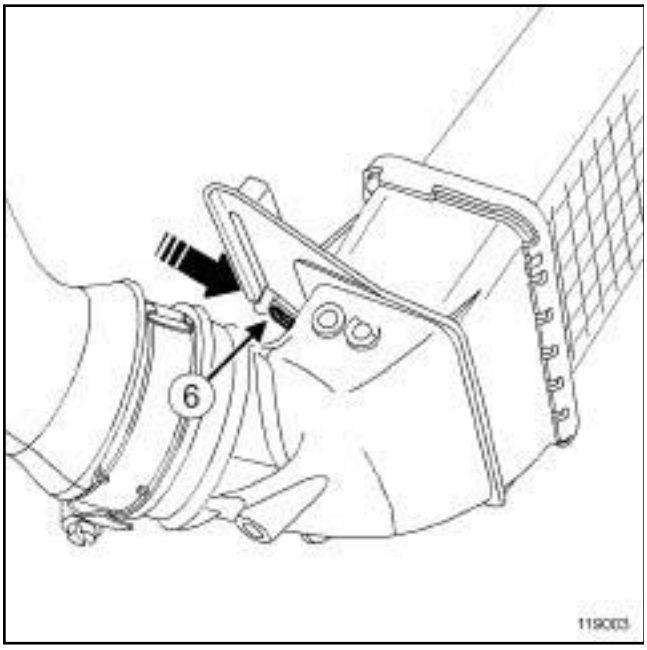

119003

❑ Press the end piece of the intercooler mounting at (**6**) , in the direction of the arrow, to unclip it.

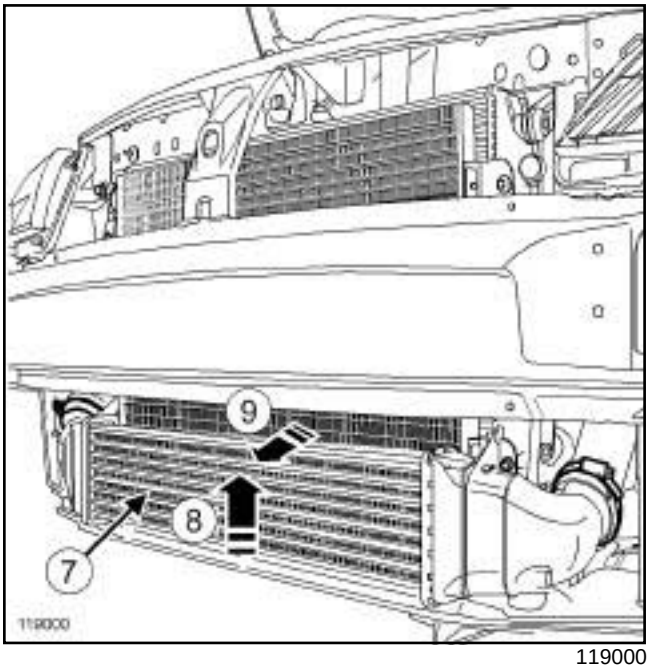

119000

❑ Remove the intercooler (**7**) in the direction of the arrows (**8**) then (**9**) .

REFITTING

I - REFITTING PREPARATION OPERATION

❑ Check that the intercooler is not full of oil. If this is the case, clean it with a cleaning agent and then let it dry.

II - REFITTING OPERATION

❑ Proceed in the reverse order to removal.

K4M

Operating diagram of the fuel supply circuit (« pump - sender - fuel filter » assembly)

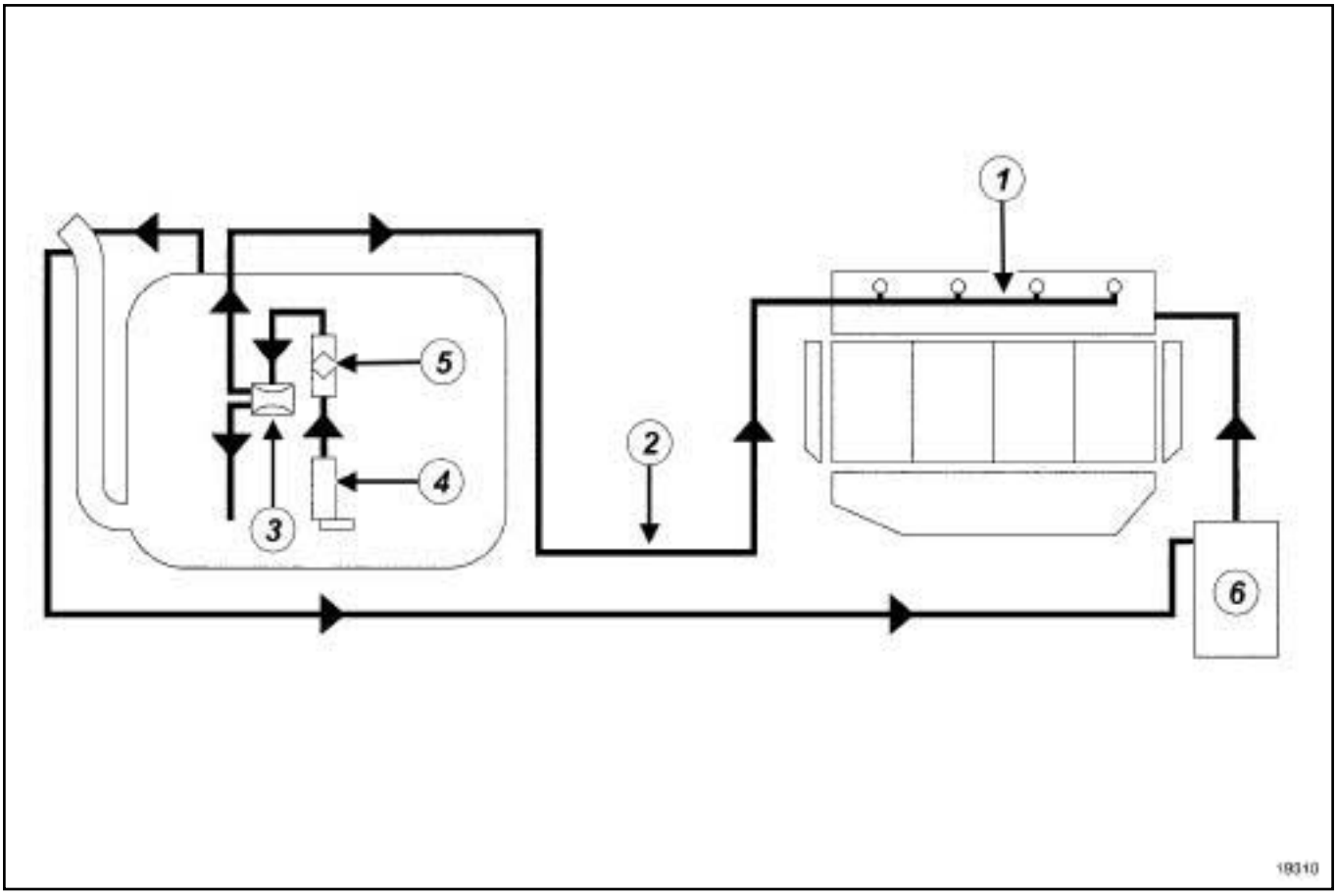

19310

The fuel supply circuit does not have a return.

The fuel pressure does not vary with engine load.

The circuit comprises:

- a rail (**1**) without a return pipe and without a supply pressure regulator,
- a single pipe (**2**) coming from the tank,
- a « pump-sender-fuel filter » assembly fitted with the pressure regulator (**3**) , the pump (**4**) and the fuel filter (**5**) (all located in the tank),
- a fuel vapour recirculation tank (**6**) .

K4M

Operating diagram of the fuel supply circuit (external filter)

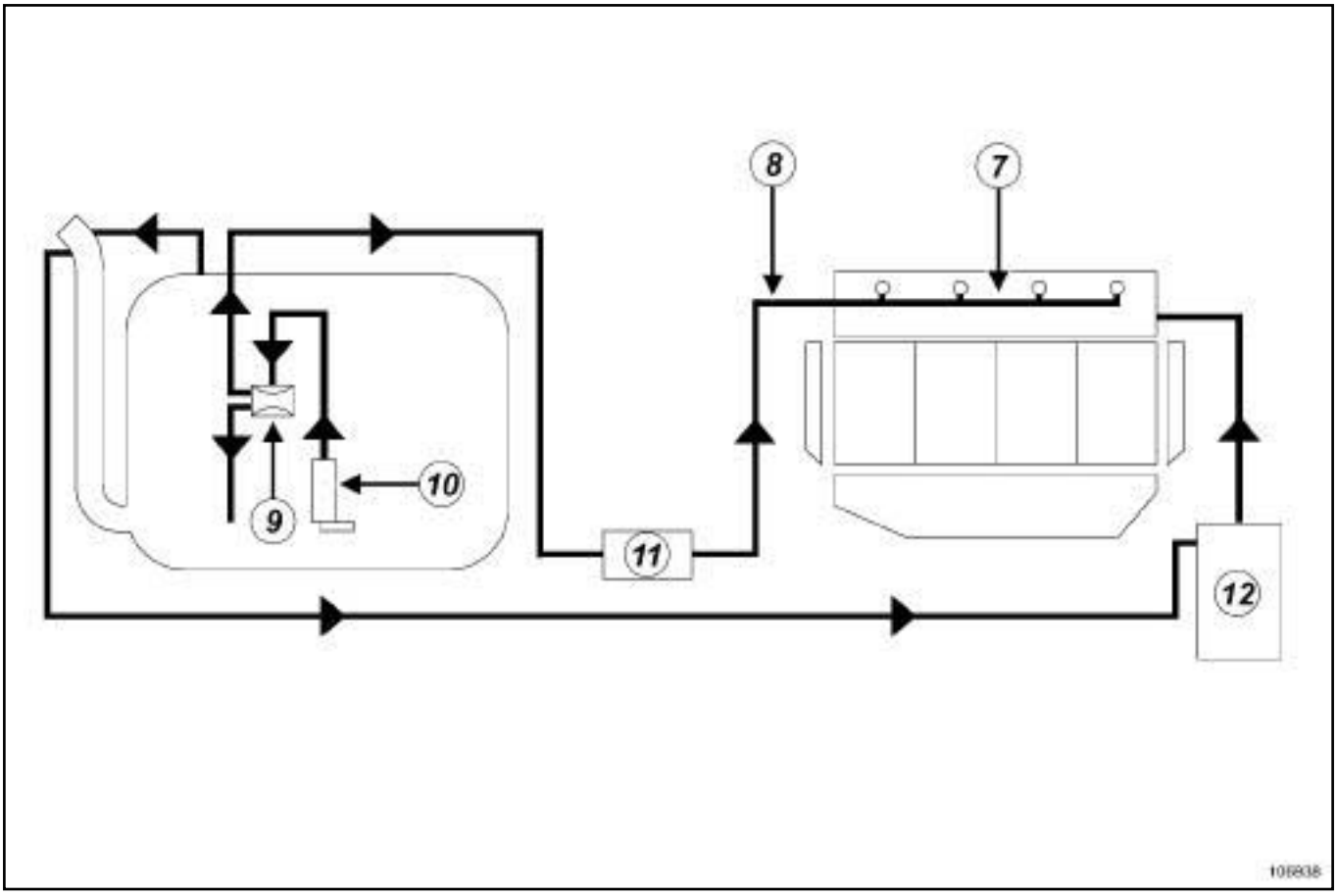

106938

The fuel supply circuit does not have a return.

The fuel pressure does not vary with engine load.

The circuit comprises:

- a rail (**7**) without a return pipe union and without a supply pressure regulator,
- a single pipe (**8**) coming from the tank,
- a « pump-fuel sender » supply assembly fitted with the pressure regulator (**9**) , the pump (**10**) and the fuel filter (**11**) ,
- a fuel vapour recirculation tank (**12**) .

K9K

IMPORTANT

To avoid all risk of damage to the systems, apply the safety and cleanliness instructions and operation recommendations before carrying out any repair:

- (see **Diesel injection: Precautions for the repair**) ,
- (see **Vehicle: Precautions for the repair**) (01D, Mechanical introduction).

IMPORTANT

During this operation, be sure to:

- refrain from smoking or bringing red hot objects close to the working area,
- be careful of fuel splashes when disconnecting the union.

IMPORTANT

Wear goggles with side protectors for this operation.

IMPORTANT

Wear leaktight gloves (Nitrile type) for this operation.

WARNING

To prevent impurities from entering the circuit, place protective plugs on all fuel circuit components exposed to the open air.

WARNING

To avoid any corrosion or damage, protect the areas on which fuel is likely to run.

Note:

The priming pump is incorporated in the fuel supply pipe.

To remove the priming pump, remove the fuel supply pipe assembly.

REMOVAL

I - REMOVAL PREPARATION OPERATION

❑ Position the vehicle on a two-post lift (see **Vehicle: Towing and lifting**) (02A, Lifting equipment).

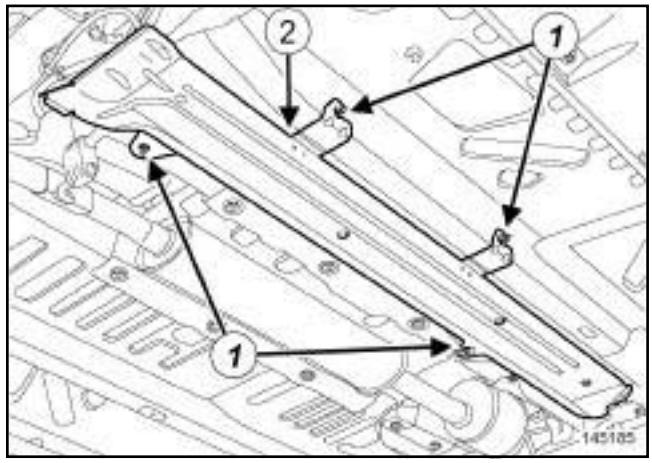

145185

❑ Remove:

- the fuel supply pipe protector nuts (**1**) ,
- the fuel supply pipe protector (**2**) .

K9K

II - OPERATION FOR REMOVAL OF PART CONCERNED

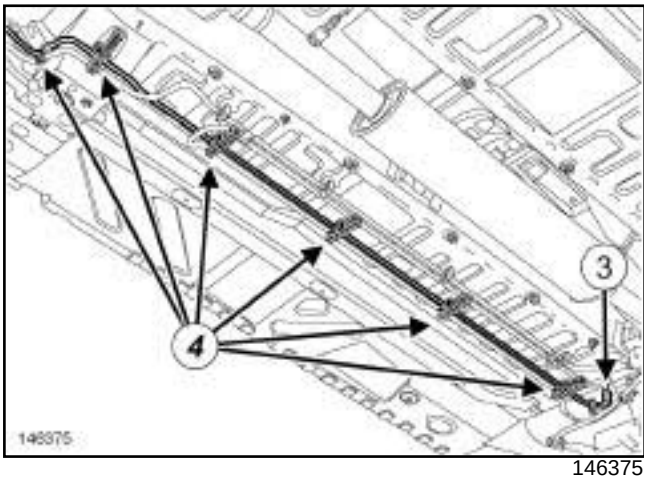

146375

- ❑ Disconnect the fuel supply pipe at the fuel tank end at (**3**) .
- ❑ Insert the blanking plugs.
- ❑ Unclip the fuel supply pipe under the body at (**4**) .

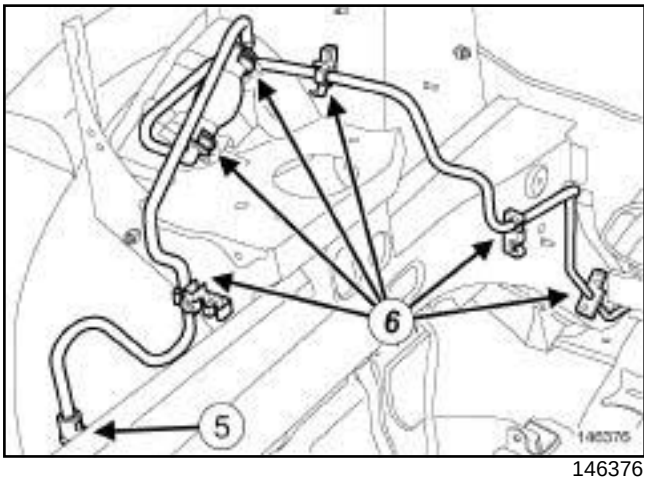

146376

- ❑ Disconnect the connection (**5**) from the fuel supply pipe on the fuel filter.
- ❑ Unclip the fuel supply pipe at (**6**) .
- ❑ Remove the fuel supply pipe through the engine compartment.

REFITTING

I - REFITTING OPERATION FOR PART CONCERNED

- ❑ Proceed in the reverse order to removal.
- ❑ Ensure that the fuel supply pipe unions are clicked into position properly.

II - FINAL OPERATION

- ❑ Prime the fuel circuit using the priming pump.

WARNING

Check that there are no leaks:

- run the engine at idle speed for **2 minutes**,
- accelerate several times at no load,
- switch off the ignition,
- check that there is no fuel escaping.

K9K

IMPORTANT

To avoid all risk of damage to the systems, apply the safety and cleanliness instructions and operation recommendations before carrying out any repair:

- (see **Diesel injection: Precautions for the repair**) ,
- (see **Vehicle: Precautions for the repair**) (01D, Mechanical introduction).

IMPORTANT

Wear leaktight gloves (Nitrile type) for this operation.

IMPORTANT

During this operation, be sure to:

- refrain from smoking or bringing red hot objects close to the working area,
- be careful of fuel splashes when disconnecting the union.

Note:

Make sure you have a new diesel filter before opening the fuel circuit.

REMOVAL

I - REMOVAL PREPARATION OPERATION

❑ Position the vehicle on a lift (see **Vehicle: Towing and lifting**) (02A, Lifting equipment).

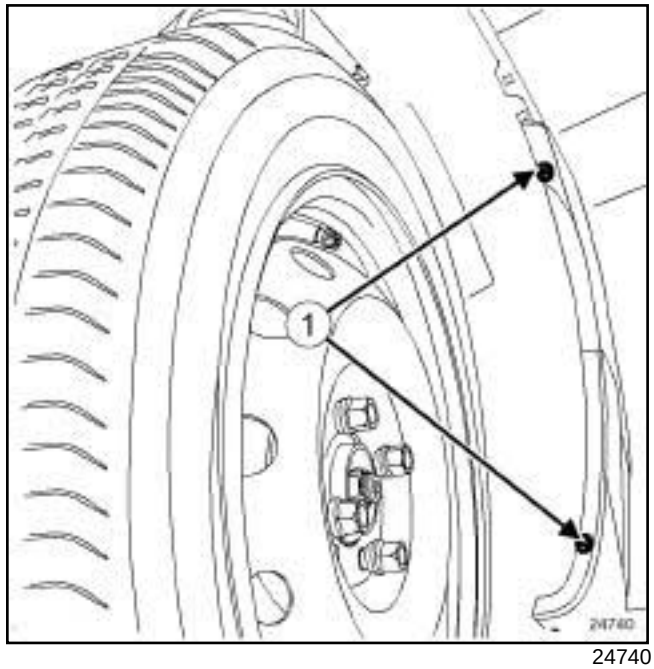

24740

❑ Remove:

- the plastic screen under the diesel filter,
- the front right-hand wheel arch liner bolts (**1**) .

❑ Move the front right-hand wheel arch liner slightly to one side.

K9K

II - REMOVAL OPERATION

MAHLE type filter

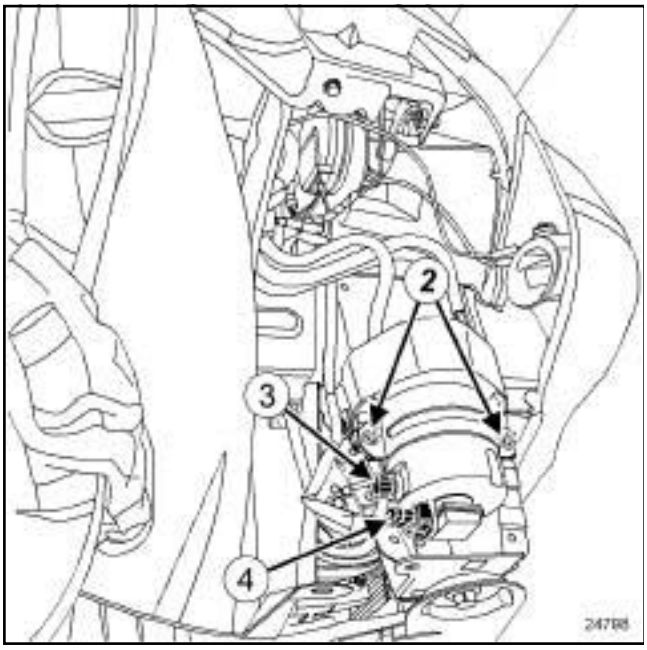

24798

❑ Remove:

- the diesel filter protection plate nuts (**2**) ,
- the diesel filter protection plate,
- the diesel filter from its mounting, noting its original position.

❑ Disconnect the water detection sensor connector (**4**) .

❑ Place a container under the diesel filter.

❑ Open the bleed screw (**3**) and let the diesel run out.

> **WARNING**
> Keep the pipe unions away from contaminated areas.

> Note:
> Mark the position of the fuel pipe unions in relation to the diesel filter before removing the diesel filter.

❑ Disconnect the pipe unions on the diesel filter.

❑ Let the diesel fuel flow out from the various pipes into the container.

❑ Fit plugs into the openings.

❑ Remove the water detection sensor, turning it anti-clockwise.

DELPHI type filter

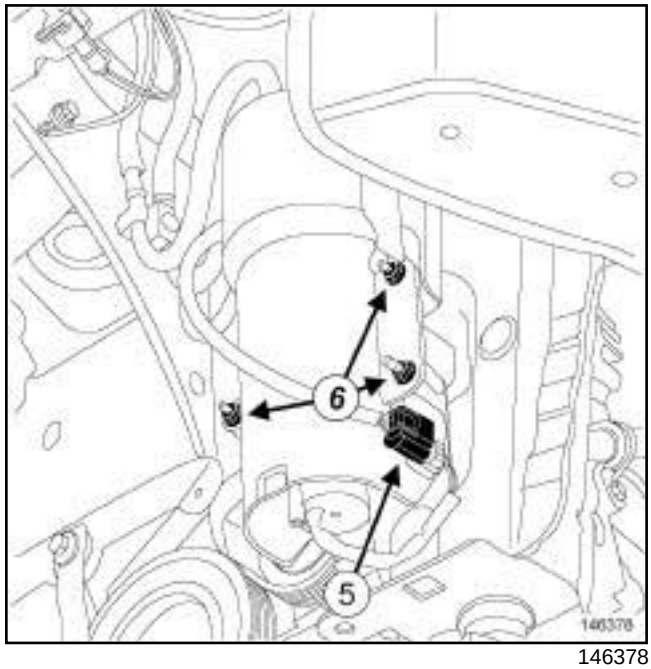

146378

❑ Disconnect the water detection sensor connector (**5**) .

❑ Remove:

- the diesel filter protection plate nuts (**6**) ,
- the diesel filter protection plate,
- the diesel filter from its mounting, noting its original position.

❑ Place a container under the diesel filter.

K9K

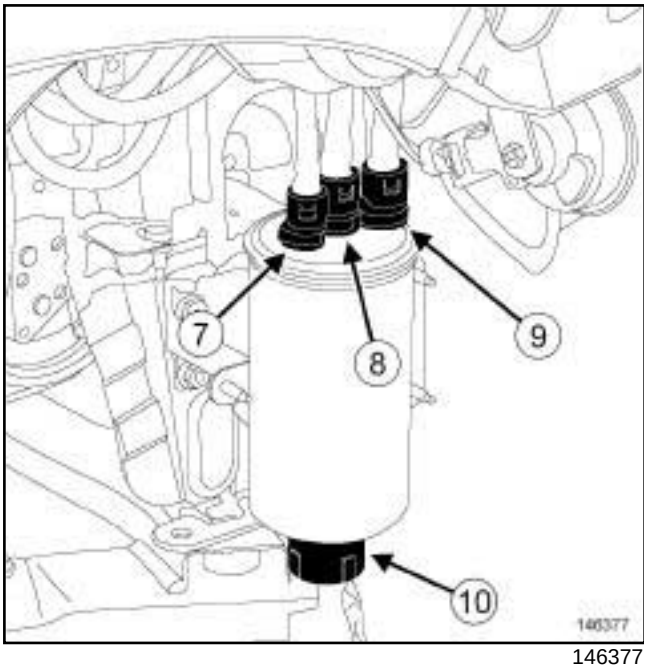

146377

❑ Disconnect:

- the fuel inlet pipe union (**7**) ,
- the fuel outlet pipe union (**8**) ,
- the fuel return pipe union (**9**) .

❑ Let the diesel fuel flow out from the various pipes into the container.

❑ Remove the water detection sensor (**10**) , turning it anti-clockwise.

❑ Fit plugs into the openings.

REFITTING

I - REFITTING OPERATION

❑ Refit the water detection sensor, turning it clockwise.

❑ Connect:

- the pipe unions on the diesel filter,
- the water detection sensor connector.

❑ Refit:

- the new diesel filter in its original position,
- the diesel filter protection plate,
- the diesel filter protection plate nuts.

II - DRAINING THE WATER INSIDE THE DIESEL FILTER

❑

> Note:
>
> - Certain vehicles have a sensor for detecting water in the diesel fuel, located in the diesel filter. If water is detected, the injection fault warning light comes on.

❑ Periodically drain any water contained in the diesel filter.

❑ For filters without a water presence sensor:

- open the drain plug,
- let the water flow out,
- close the plug.

❑ For filters with a water presence sensor:

- disconnect the water presence sensor connector,
- unclip the water presense sensor connector,
- loosen the water presence sensor by one turn,
- let the water flow out,
- tighten the water presence sensor,
- connect the water presence sensor connector.

III - FINAL OPERATION

❑ Refit:

- the front right-hand wheel arch liner,
- the plastic screen under the diesel filter.

K9K

Priming the supply circuit

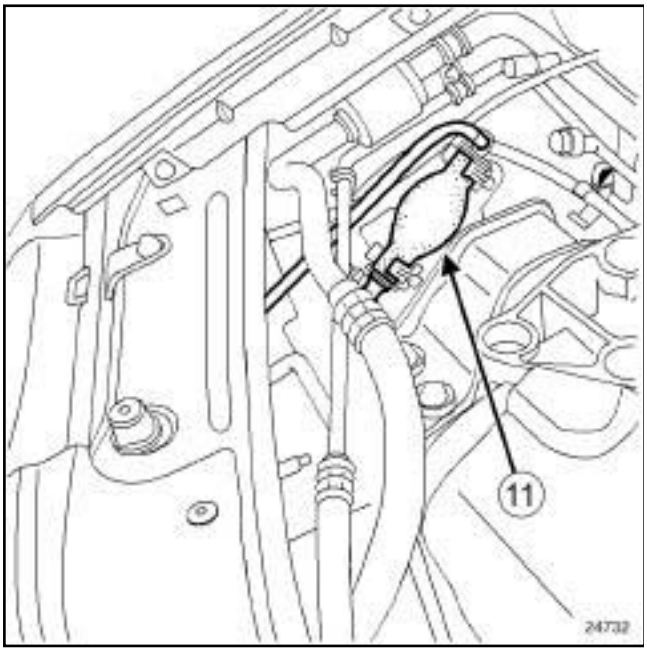

24732

❑ Prime the fuel system with the manual priming pump (**11**) (automatic degassing).

K4M

Special tooling required	
Mot. 1311-08	Union for taking fuel pressure measurements.

Tightening torques ▽	
fuel pipe protector nuts	**7 N.m**
fuel pipe protector bolt	**7 N.m**

IMPORTANT

During this operation, be sure to:

- refrain from smoking or bringing red hot objects near the working area,
- beware of fuel splashes when disconnecting the union,
- protect sensitive areas from fuel outflow.

IMPORTANT

Wear goggles with side protectors for this operation.

IMPORTANT

Wear leaktight gloves (nitrile type) for this operation.

WARNING

To avoid any corrosion or damage, protect the areas on which fuel is likely to run.

CHECK

❑ Position the vehicle on a two-post lift (see **Vehicle: Towing and lifting**) (02A, Lifting equipment).

❑ Switch off the ignition.

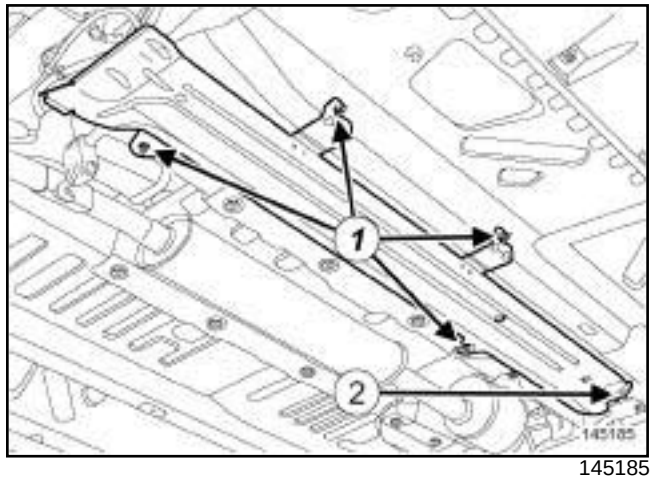

145185

❑ Remove:

- the nuts (**1**) and the bolt (**2**) from the fuel pipe protector,
- the fuel pipe protector.

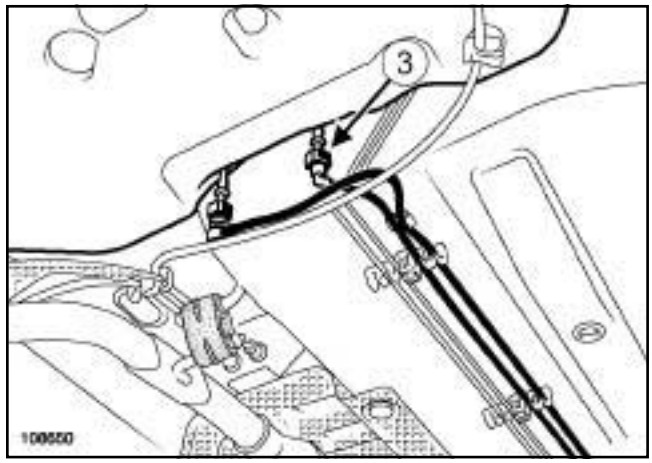

108650

❑ Disconnect the fuel supply pipe union (**3**) .

K4M

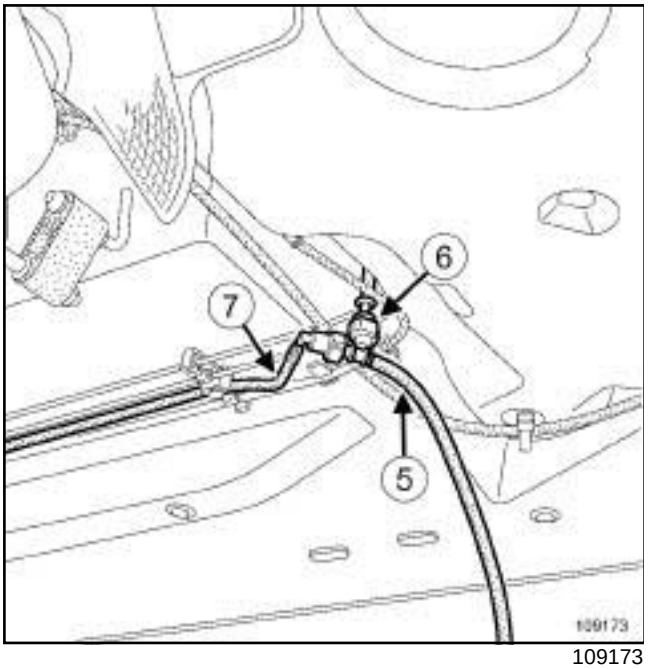

109173

❑ Connect:

- the « T » union **(Mot. 1311-08)** (**6**) to the fuel tank outlet pipe,
- the pipe (**5**) fitted with a pressure gauge contained in the test kitonto the « T » union (**6**) ,
- the fuel supply pipe (**7**) to the « T » union (**6**) .

❑ Start the vehicle to run the fuel pump.

❑ Determine the pressure:

- the pressure must be constant (approximately **3.5 bar ± 0.2 bar**),
- It may take a few seconds to obtain a correct pressure reading.

❑ Disconnect:

- the pipe fitted with the pressure gauge contained in the test kitfrom the « T » union,
- the « T » union **(Mot. 1311-08)** from the fuel tank outlet pipe.

❑ Connect the fuel supply pipe union to the fuel tank outlet pipe.

❑ Refit the fuel supply pipe protector.

❑ Torque tighten:

- the **fuel pipe protector nuts (7 N.m)**,
- the **fuel pipe protector bolt (7 N.m)**.

K4M

Special tooling required	
Mot. 1311-08	Union for taking fuel pressure measurements.

Tightening torques ▽	
fuel pipe protector nuts	**7 N.m**
fuel pipe protector bolt	**7 N.m**

IMPORTANT

During this operation, be sure to:

- refrain from smoking or bringing red hot objects near the working area,
- beware of fuel splashes when disconnecting the union,
- protect sensitive areas from fuel outflow.

IMPORTANT

Wear goggles with side protectors for this operation.

IMPORTANT

Wear leaktight gloves (nitrile type) for this operation.

WARNING

To avoid any corrosion or damage, protect the areas on which fuel is likely to run.

CHECK

❑ Position the vehicle on a two-post lift (see **Vehicle: Towing and lifting**) (02A, Lifting equipment).

❑ Switch off the ignition.

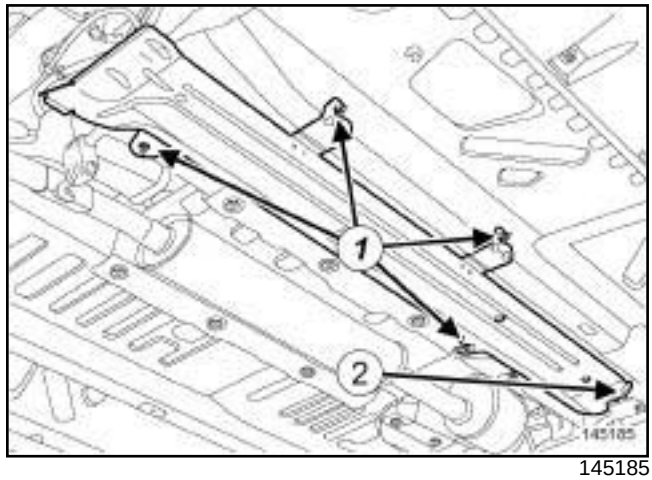

145185

❑ Remove:

- the nuts (**1**) and the bolt (**2**) from the fuel pipe protector,
- the fuel pipe protector.

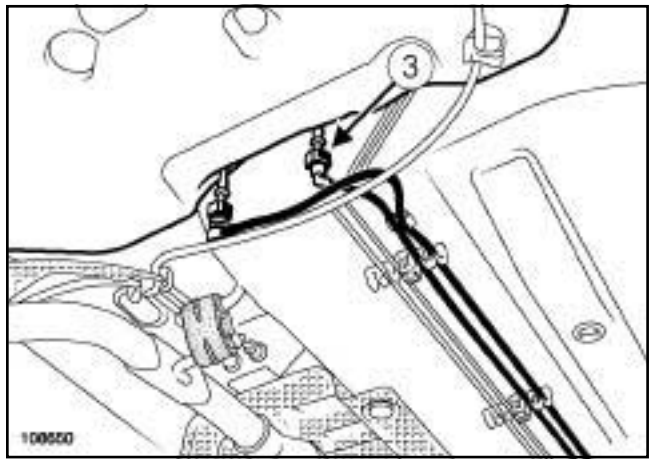

108650

❑ Disconnect the fuel supply pipe union (**3**) .

K4M

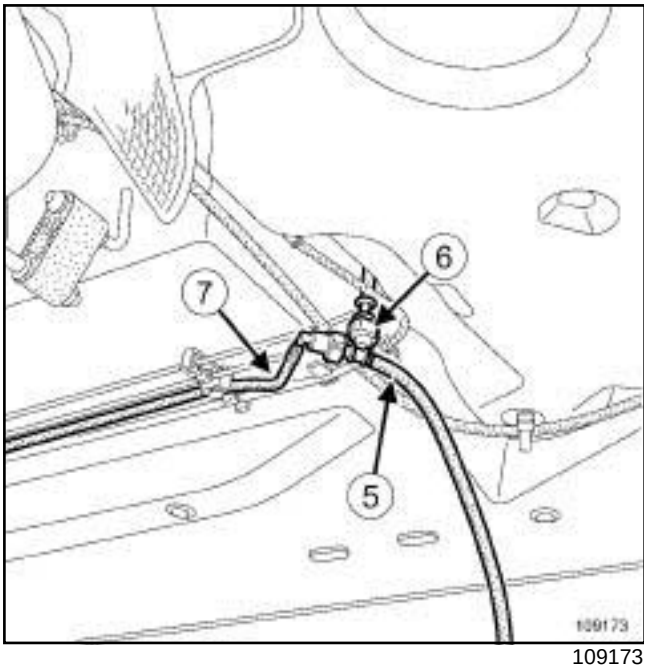

109173

❑ Connect:

- the « T » union **(Mot. 1311-08)** (**6**) to the fuel tank outlet pipe,
- the pipe (**5**) contained in the test kitonto the « T » union (**6**) ,
- the fuel supply pipe (**7**) to the « T » union (**6**) .

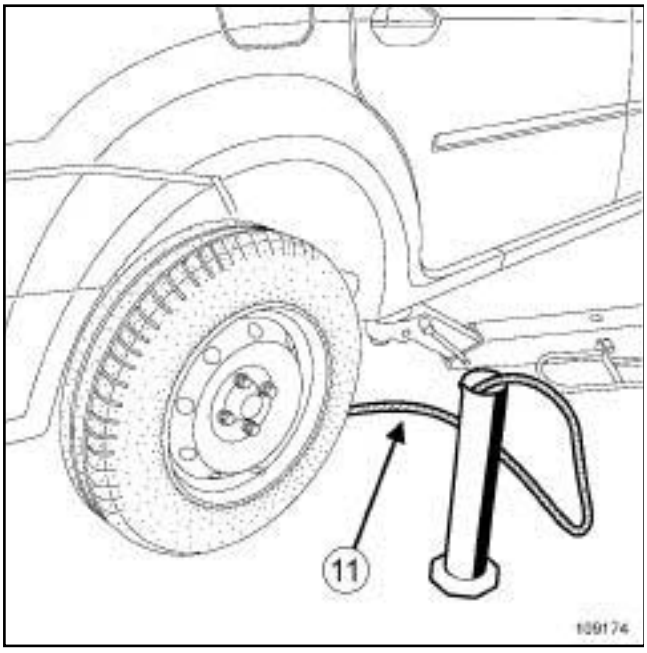

109174

❑ Insert the pipe (**11**) into a graduated measuring cylinder (**2000 ml**).

❑ Remove the Protection and Switching Unit cover.

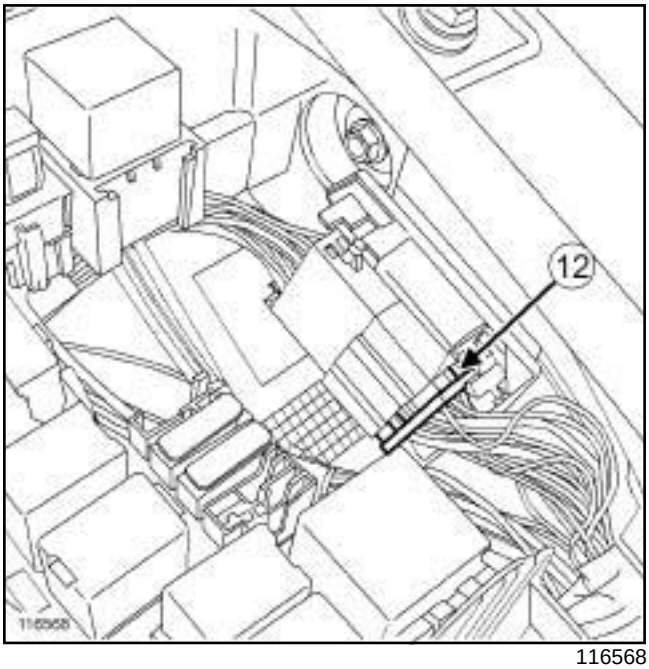

116568

❑ Disconnect the connector (**12**) from the passenger compartment engine harness.

K4M

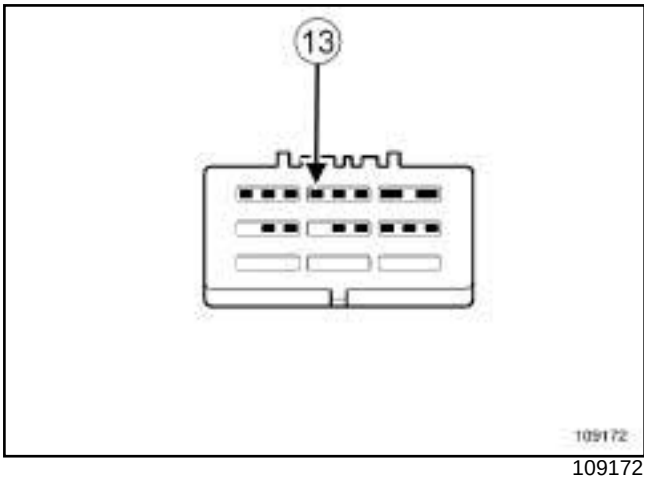

109172

- Connect the connector terminal (**13**) to the + **BATTERY** to operate the fuel pump.
- Note the time taken for the measuring cylinder to fill up.

> Note:
>
> The minimum flow rate from the fuel pump is **60 l/h**.

- Remove the terminal (**13**) of the + **BATTERY** connector.
- Refit the Protection and Switching Unit cover.
- Disconnect:
  - the pipe fitted with the pressure gauge contained in the test kitfrom the « T » union,
  - the « T » union **(Mot. 1311-08)** from the fuel tank outlet pipe.
- Connect the fuel supply pipe union to the tank outlet pipe.
- Refit the fuel supply pipe protector.
- Torque tighten:
  - the **fuel pipe protector nuts (7 N.m)**,
  - the **fuel pipe protector bolt (7 N.m)**.

Diesel injection: List and location of components

K9K, and 796

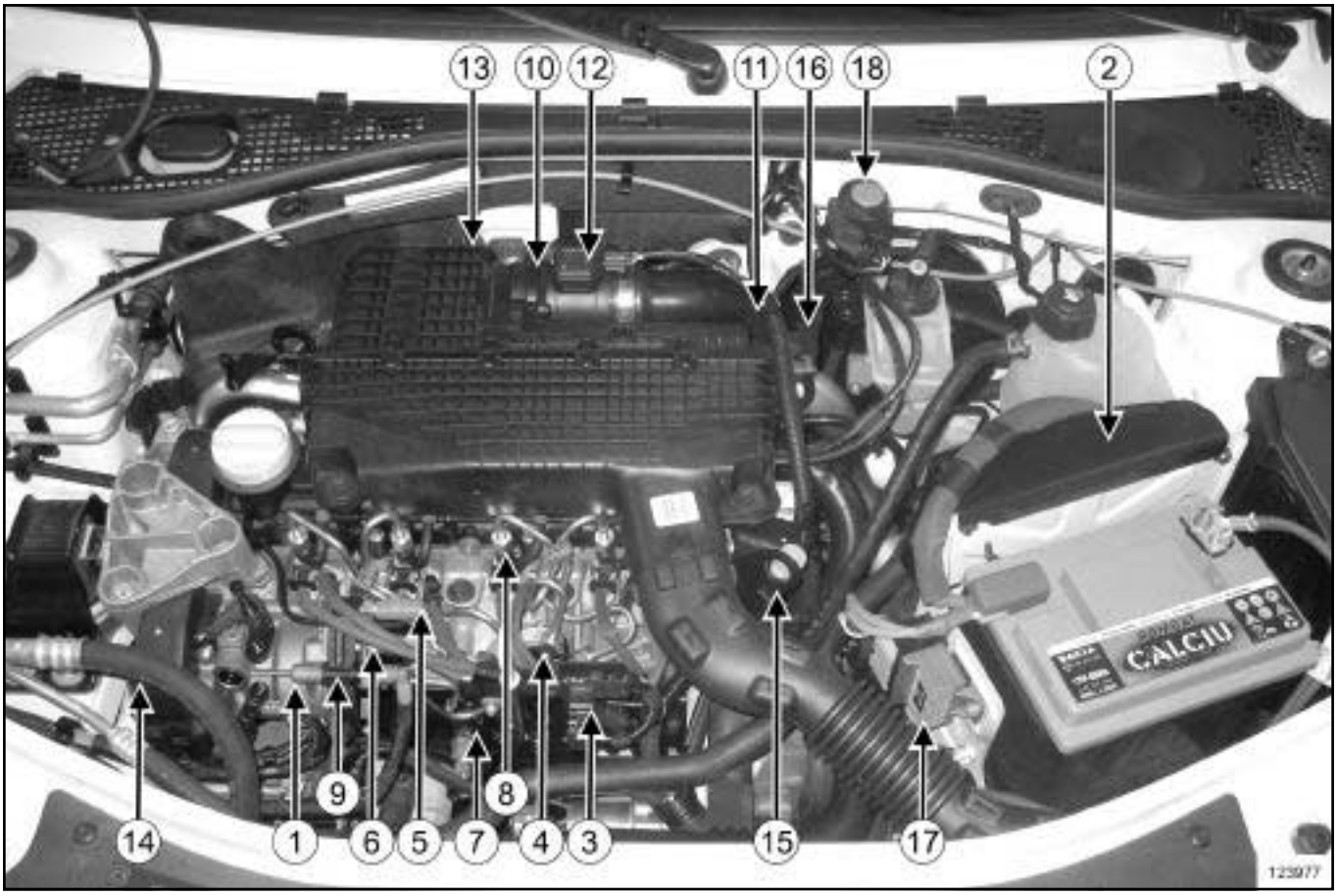

123977

No.	Description
1	High pressure pump
2	Injection computer
3	Injector rail pressure sensor
4	Spherical injector rail
5	Diesel temperature sensor
6	Diesel fuel flow actuator
7	Accelerometer
8	Injector
9	Venturi
10	Exhaust gas recirculation solenoid valve
11	Turbocharging air pressure sensor
12	Air flowmeter with integrated temperature sensor

No.	Description
13	Turbocharger
14	Cylinder reference sensor
15	Coolant temperature sensor
16	TDC sensor
17	Pre-postheating unit
18	Turbocharger control solenoid valve (only for K9K 796 engine)
19	Accelerator pedal potentiometer

K9K, and 796

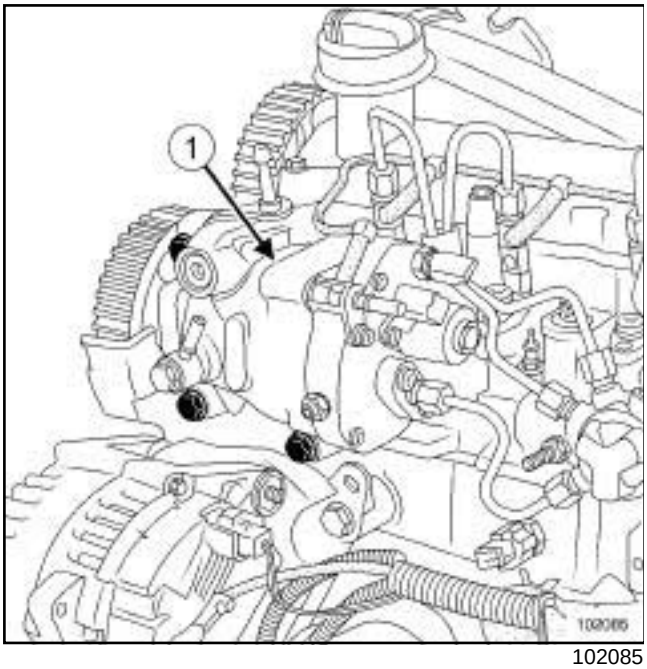

102085

High-pressure pump (**1**) .

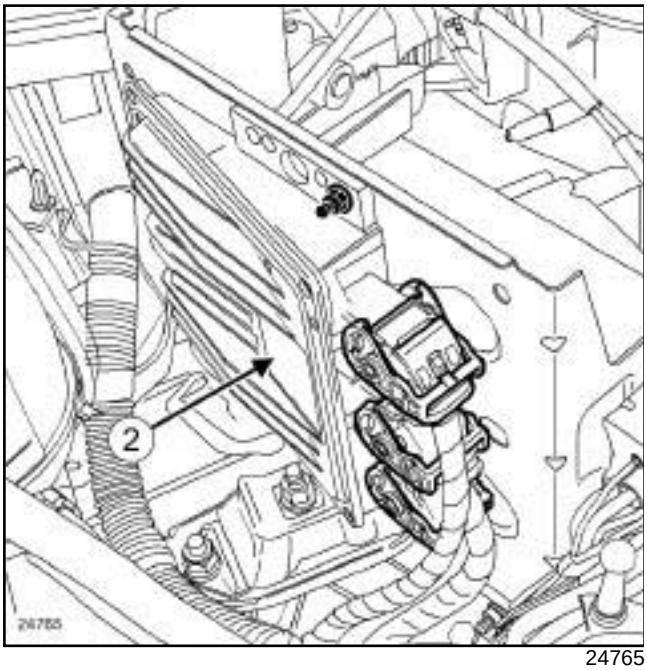

24765

Injection computer (**2**) .

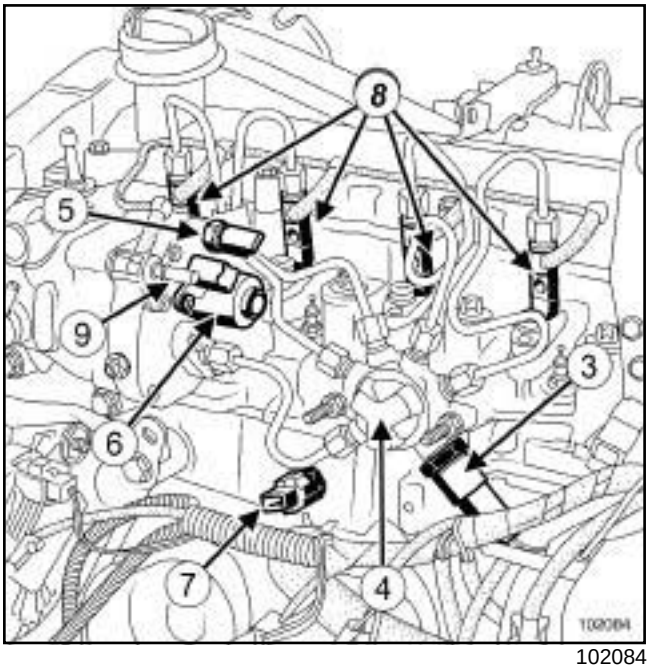

102084

Injector rail pressure sensor (**3**) ,

Spherical injector rail (**4**) ,

Diesel temperature sensor (**5**) ,

Diesel fuel flow actuator (**6**) ,

Accelerometer (**7**) ,

Injectors (**8**) ,

Venturi (**9**) .

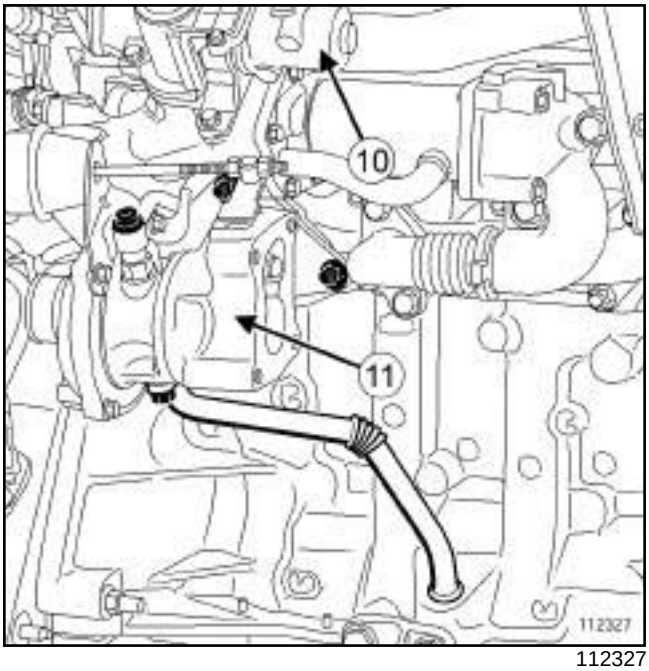

112327

Exhaust gas recirculation solenoid valve (**10**) ,

Turbocharger (**11**) .

K9K, and 796

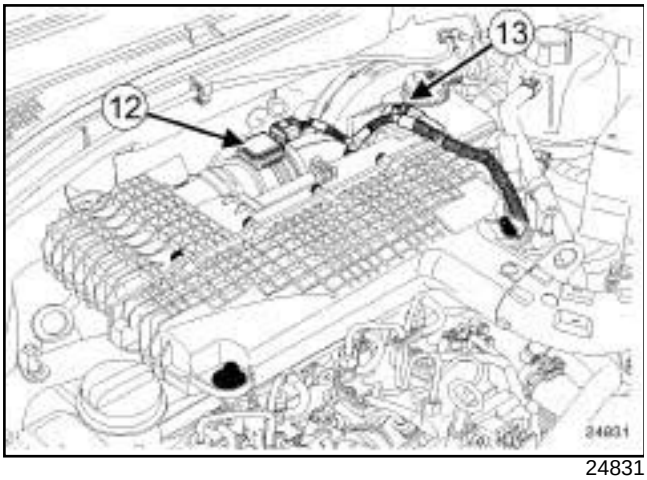

24831

Air flowmeter with integrated temperature sensor (**12**) ,

Turbocharging air pressure sensor (**13**) .

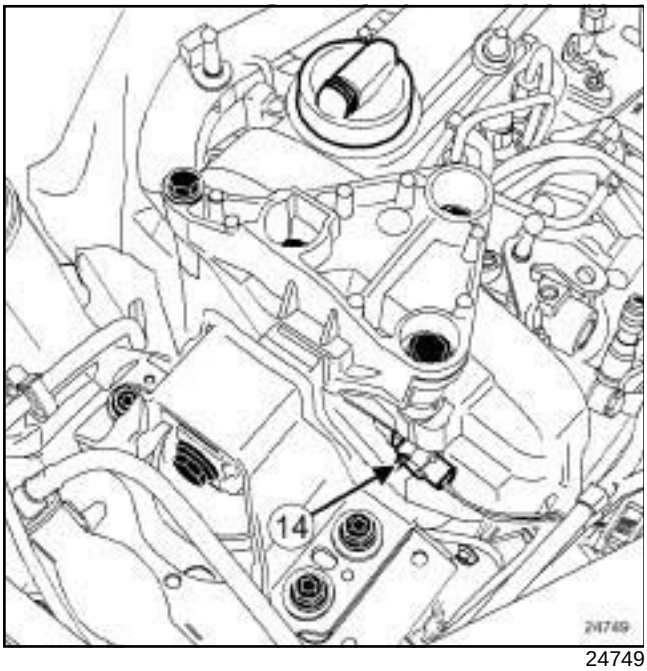

24749

Cylinder marking sensor (**14**) .

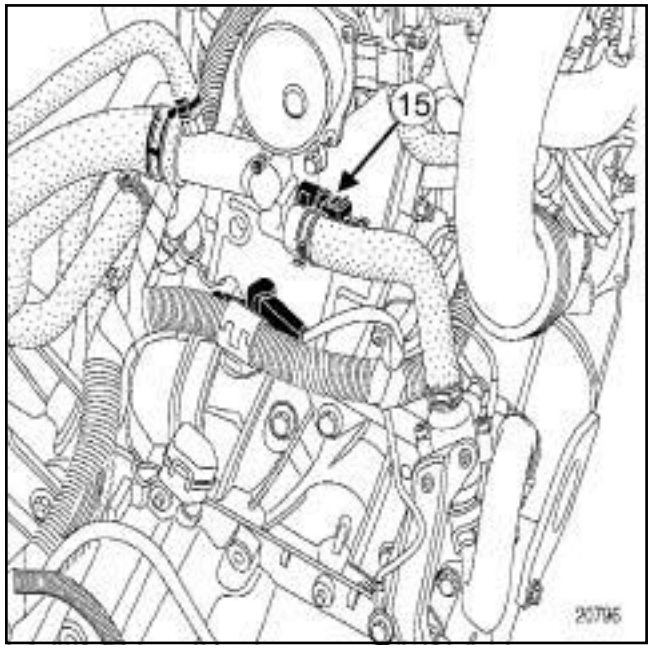

20796

Coolant temperature sensor (**15**) .

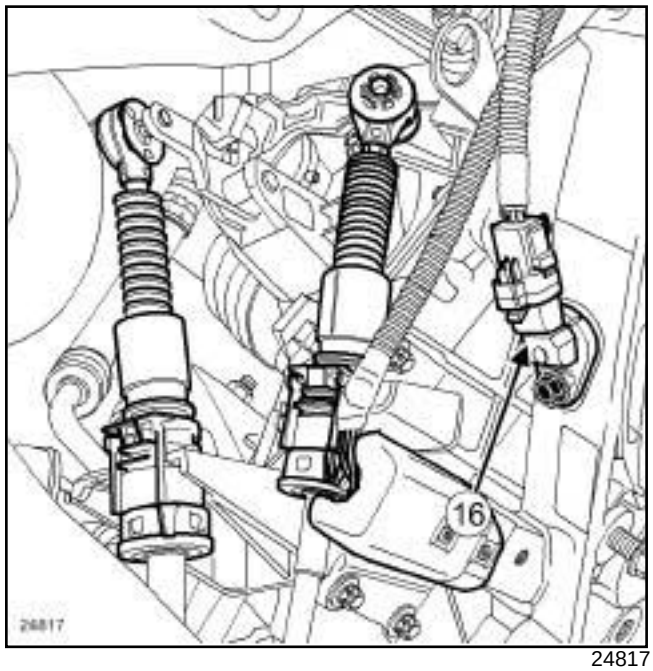

24817

Top Dead Centre sensor (**16**) .

K9K, and 796

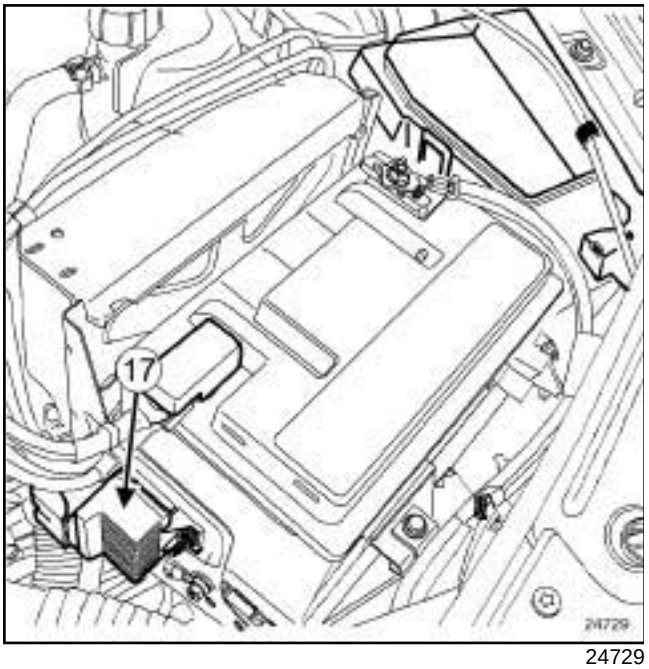

24729

Pre-postheating unit (**17**) .

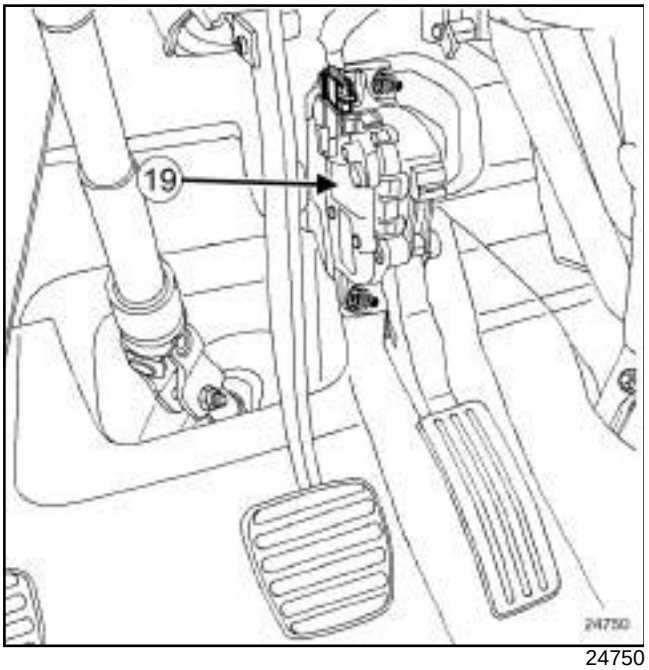

24750

Accelerator pedal potentiometer (**19**) .

K9K

Equipment required
Diagnostic tool

Tightening torques ▽	
injection computer nuts	**8 N.m**
injection computer protector bolts	**8 N.m**

Note:

When programming, reprogramming or replacing the computer, it is necessary to program the new computer with the C2I parameters (injector flow correction) and the engine adaptives using the **Diagnostic tool**.

There are two ways to do this (see **Fault finding - Replacement of components**) (13B, Diesel injection):

- an automatic method which can be used if it is possible to read the information contained in the old computer,
- a manual method which is to be used if it is not possible to read the information contained in the old computer.

REMOVAL

I - REMOVAL PREPARATION OPERATION

❏ Remove the battery (see **Battery: Removal - Refitting**) (80A, Battery).

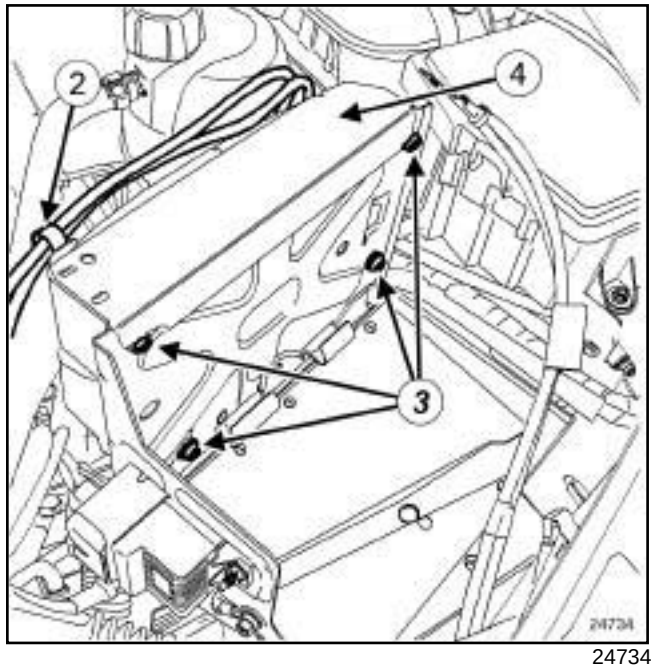

24734

❏ Unclip the positive terminal wiring (**2**) .

❏ Remove:

- the bolts (**3**) from the injection computer protector,
- the injection computer protector (**4**) .

II - REMOVAL OPERATION

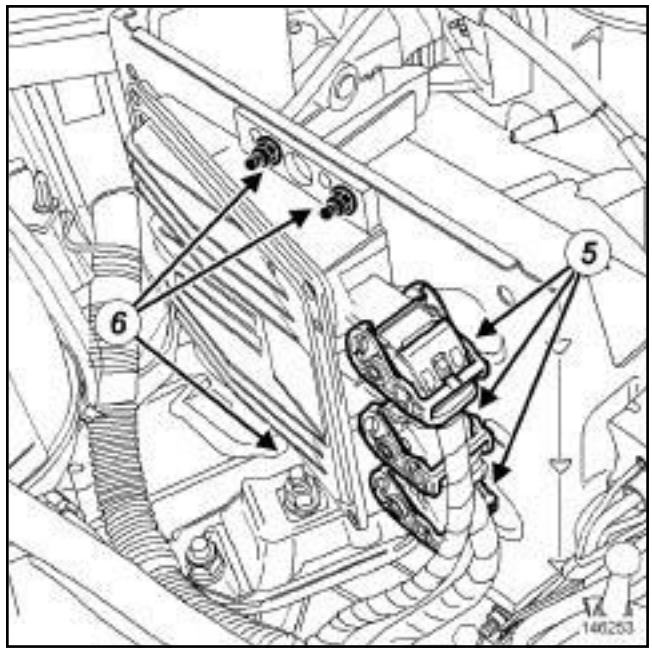

146253

❏ Remove the injection computer nuts (**6**) .

❏ Disconnect the three connectors (**5**) from the injection computer.

❏ Remove the injection computer.

K9K

REFITTING

I - REFITTING OPERATION

- ❑ Fit the injection computer on its mounting studs.
- ❑ Torque tighten the **injection computer nuts (8 N.m)**.
- ❑ Connect the injection computer connectors.

II - FINAL OPERATION

- ❑ Refit the injection computer protector.
- ❑ Tighten to torque the **injection computer protector bolts (8 N.m)**.
- ❑ Clip on the positive terminal wiring.
- ❑ Refit the battery (see **Battery: Removal - Refitting**) (80A, Battery).
- ❑ Respect the programming settings for the C2I (individual injector correction) parameters and the engine adaptives (see **Fault finding - Replacement of components**) (13B, Diesel injection).
- ❑ Switch on the ignition and read the fault codes using the **Diagnostic tool**.
- ❑ If necessary, repair the faults indicated.
- ❑ Clear the faults.
- ❑ Check that the vehicle is working properly.

K9K

REMOVAL

OPERATION FOR REMOVAL OF PART CONCERNED

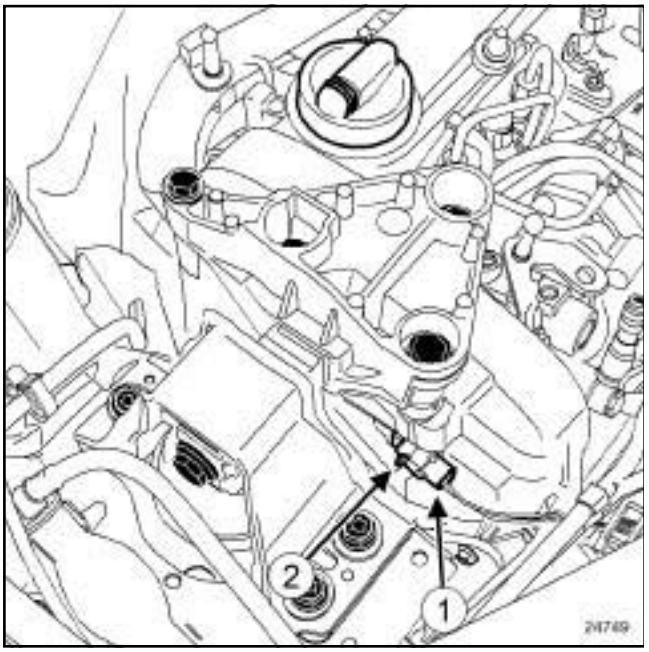

24749

- ❑ Disconnect the connector (**1**) from the camshaft position sensor.
- ❑ Remove:
  - the bolt (**2**) from the camshaft position sensor,
  - the camshaft position sensor.

REFITTING

I - REFITTING OPERATION FOR PART CONCERNED

- ❑ Refit:
  - the camshaft position sensor,
  - the camshaft position sensor bolt.

II - FINAL OPERATION

- ❑ Reconnect the camshaft position sensor connector.

K9K, and 796

Tightening torques ▽	
crankshaft position and speed sensor bolt	**8 N.m**

REMOVAL

I - REMOVAL PREPARATION OPERATION

❑ Position the vehicle on a two-post lift (see **Vehicle: Towing and lifting**) (02A, Lifting equipment).

❑ Remove:

- the engine undertray bolts,
- the engine undertray.

II - REMOVAL OPERATION

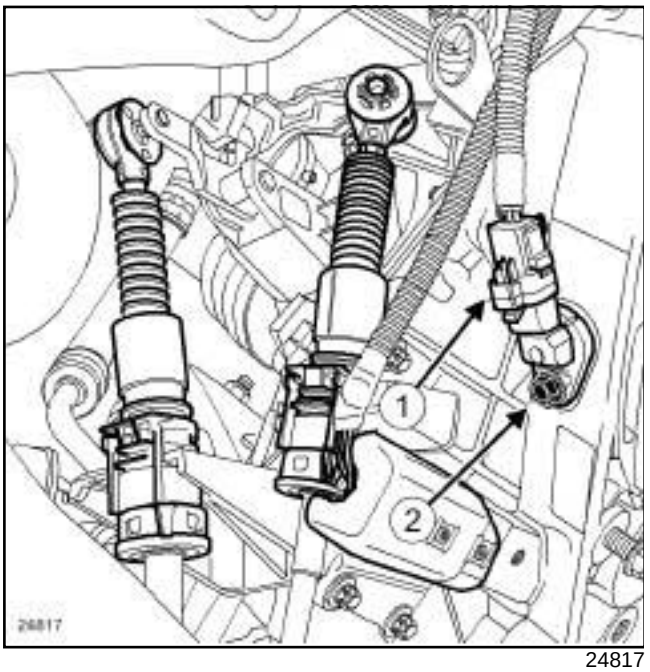

24817

❑ Disconnect the crankshaft position sensor connector (**1**) from underneath the vehicle.

❑ From underneath the vehicle, remove:

- the crankshaft position sensor bolt (**2**) ,
- the crankshaft position sensor.

REFITTING

I - REFITTING OPERATION

❑ Refit the crankshaft position sensor.

❑ Torque tighten the **crankshaft position and speed sensor bolt (8 N.m)**.

❑ Connect the crankshaft position sensor connector.

II - FINAL OPERATION

❑ Refit the engine undertray.

K9K, and 796

Equipment required
Diagnostic tool

Tightening torques ▽	
the high pressure pump bolts	**23 N.m**
high pressure pump pulley nut	**70 N.m**
dipstick guide and filler neck nuts on the high pressure rail	**21 N.m**

IMPORTANT
To avoid all risk of damage to the systems, apply the safety and cleanliness instructions and operation recommendations before carrying out any repair (see **Diesel injection: Precautions for the repair**) .

IMPORTANT

Before carrying out any work on the injection system, use the **Diagnostic tool** to check:

- that the injector rail is not under pressure,

- that the fuel temperature is not too high.

It is essential to respect the safety and cleanliness advice whenever work is carried out on this system.

Working on the circuit with the engine running is strictly forbidden.

IMPORTANT
Wear leaktight gloves (Nitrile type) for this operation.

WARNING
To avoid any corrosion or damage, protect the areas on which fuel is likely to run.

Note:

Never run the engine in the opposite direction to that of normal operation.

REMOVAL

I - REMOVAL PREPARATION OPERATION

❏ Position the vehicle on a two-post lift (see **Vehicle: Towing and lifting**) (02A, Lifting equipment).

❏ Disconnect the battery (see **Battery: Removal - Refitting**) (80A, Battery).

❏ Remove the front engine cover.

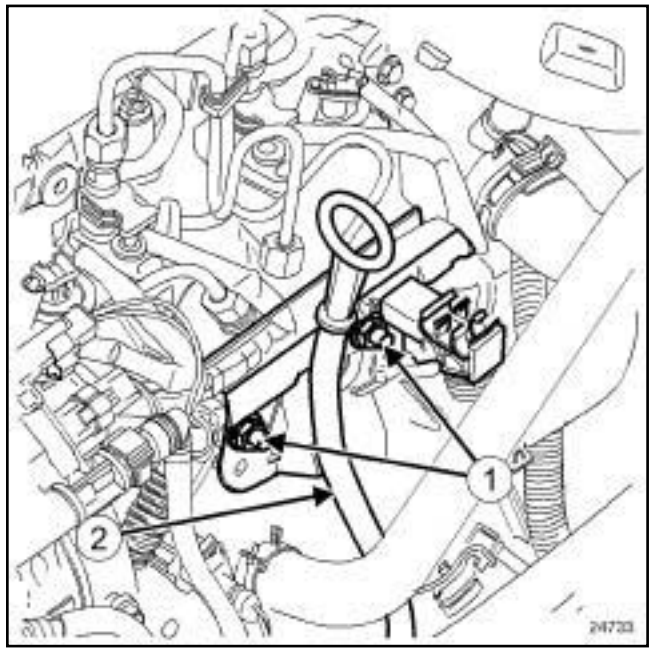

24733

❏ Remove the dipstick guide and filler neck nuts (**1**) .

❏ Put the dipstick guide to one side (**2**) .

K9K, and 796

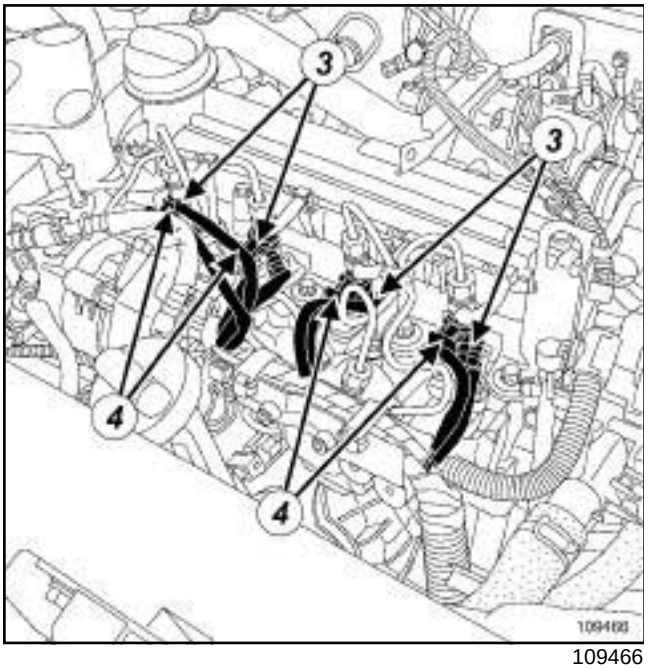

109466

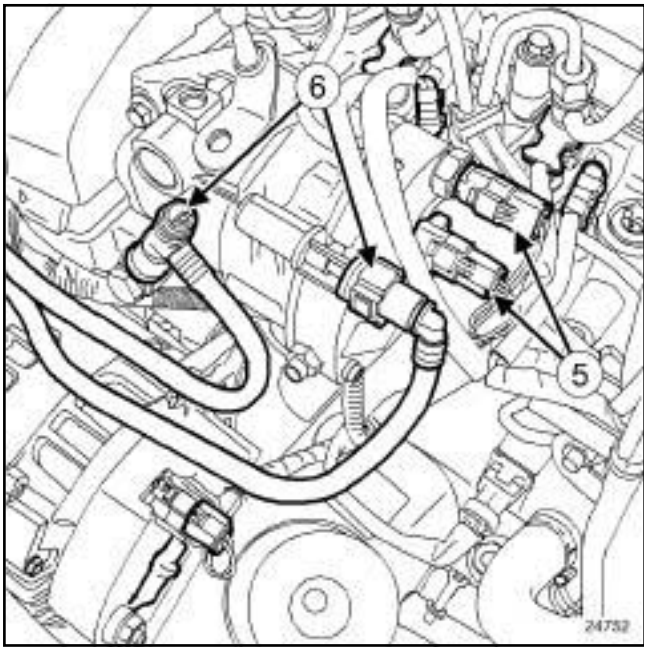

24752

❑ Disconnect:

- the heater plugs (**3**) ,
- the injectors (**4**) ,
- the connectors from the high pressure pump (**5**) .

❑ Clean the diesel supply and return pipes (see **Diesel injection: Precautions for the repair**) .

❑ Disconnect the diesel supply and return pipes (**6**) .

❑ Fit blanking plugs into the openings.

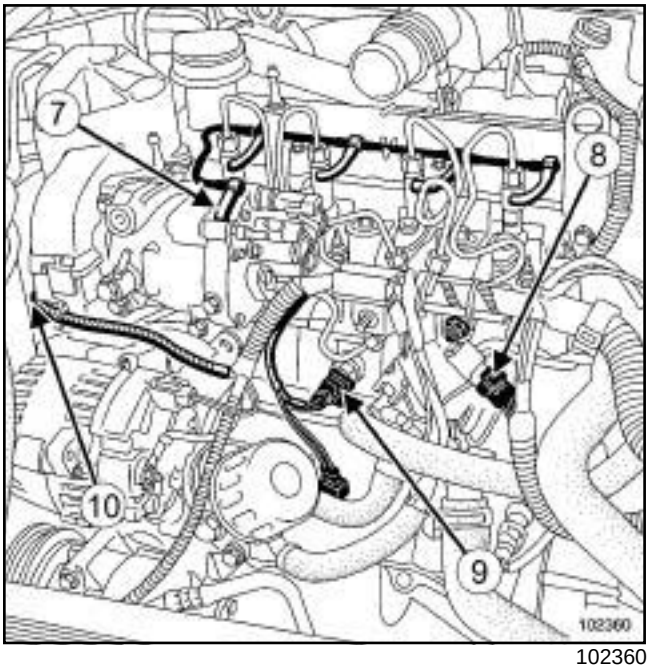

102360

❑ Disconnect:

- the fuel return pipe (**7**) connecting the injectors to the high-pressure pump,
- the injector rail pressure sensor (**8**) ,
- the accelerometer (**9**) ,
- the camshaft position sensor (**10**) .

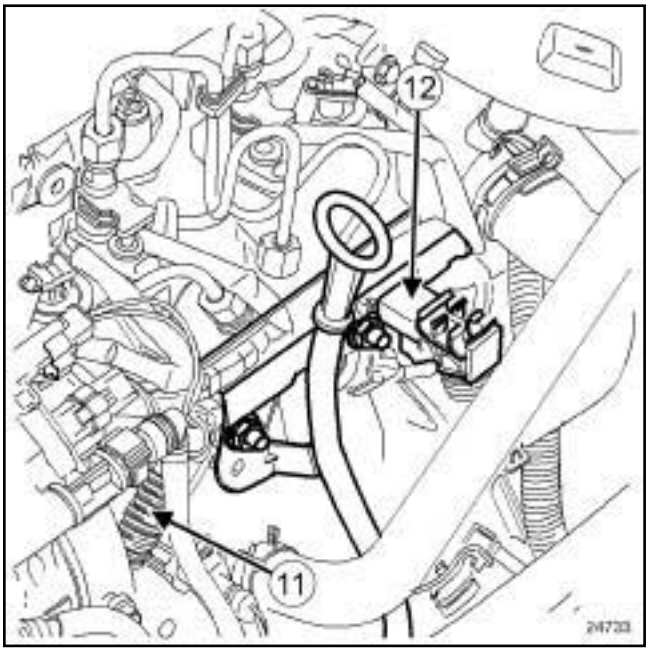

24733

❑ Unclamp the engine wiring (**11**) and move it to one side.

❑ Remove the channel (**12**) located on the injector rail.

K9K, and 796

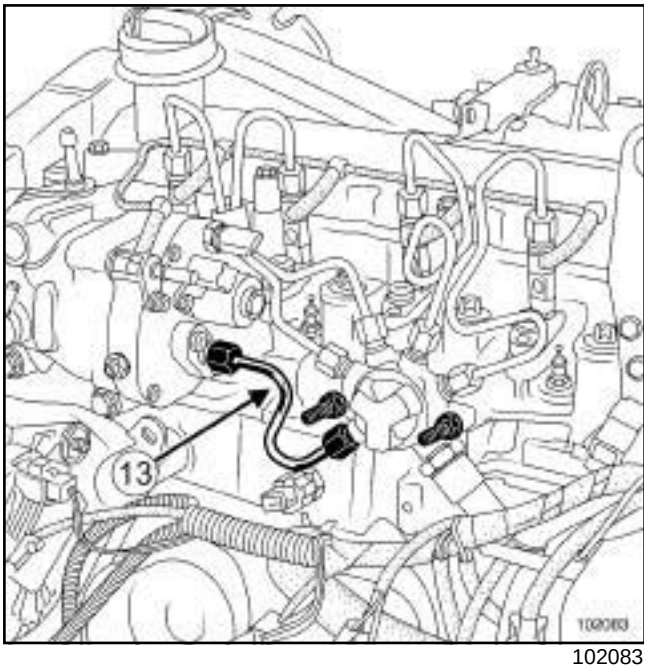

102083

- ❑ Remove the high pressure pipe (**13**) between the injector rail and the high pressure pump (see **13B**, **Diesel injection**, **High pressure pipe between pump and rail: Removal - Refitting**, page **13B-19**) .
- ❑ Put blanking plugs in all the openings of the injection circuit.
- ❑ Remove:
  - the right-hand suspended engine mounting (see **19D**, **Engine mounting**, **Right-hand suspended engine mounting: Removal - Refitting**, page **19D-4**) ,
  - the camshaft position sensor (see **13B**, **Diesel injection**, **Camshaft position sensor: Removal - Refitting**, page **13B-7**) .
- ❑ Remove (see **11A**, **Top and front of engine**, **Timing belt: Removal - Refitting**, page **11A-17**) :
  - the upper timing cover,
  - the lower timing cover,
  - the cylinder head suspended mounting.
- ❑ Position the engine at top dead centre (see **11A**, **Top and front of engine**, **Timing belt: Removal - Refitting**, page **11A-17**) .

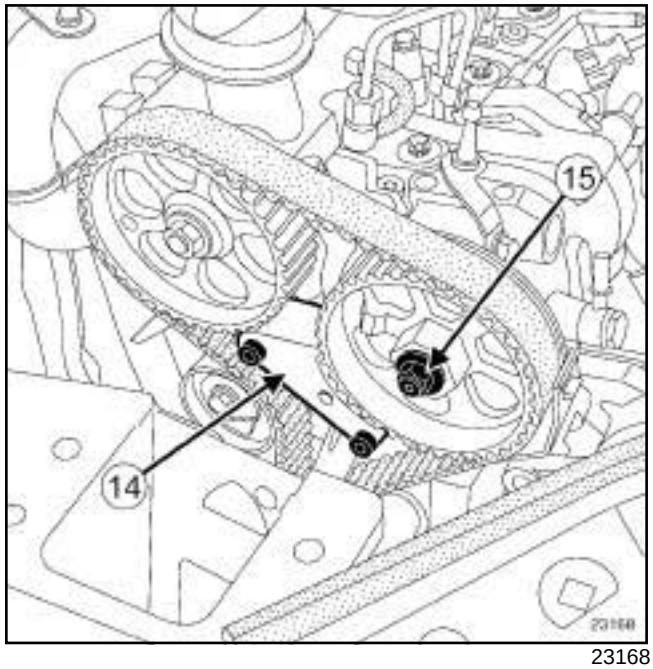

23168

- ❑ Fit the high pressure pump pulley retaining tool (**14**) .
- ❑ If necessary, turn the engine slowly to adjust the position of the locking tool on the pump pulley teeth.
- ❑ Remove the high pressure pump pulley nut (**15**) , holding the pulley with a **32 mm** open-jawed spanner.

K9K, and 796

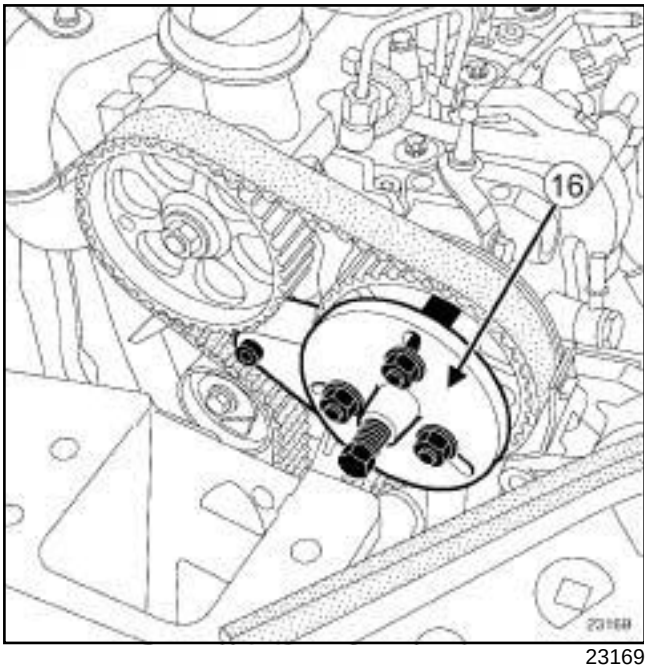

23169

❑ Position the (**16**) fitted with the.

WARNING

Ensure that the tool pushrod is correctly oriented and is pressing against the high pressure pump shaft.

II - REMOVAL OPERATION

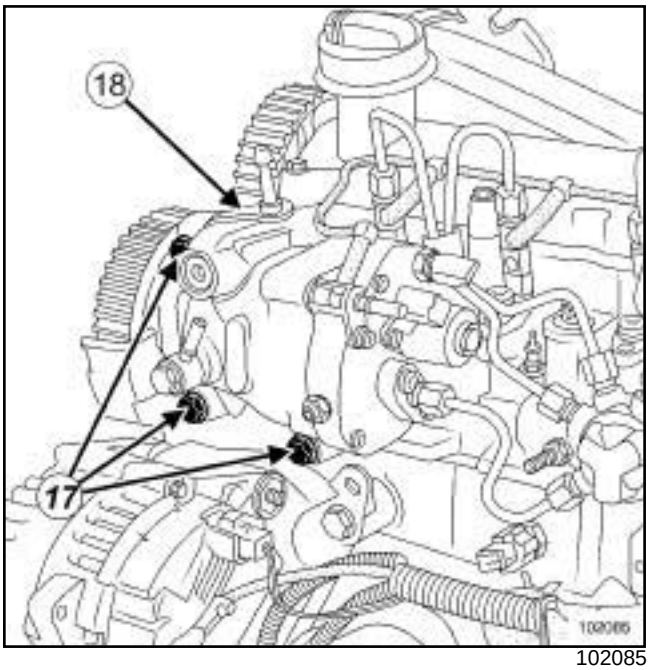

102085

❑ Remove:

- the high pressure pump bolts (**17**) ,
- the bracket (**18**) from the engine cover.

❑ Screw the pushrod of the tooluntil the high pressure pump becomes detached.

❑ Remove:

- the high pressure pump,
- the.

REFITTING

I - REFITTING PREPARATION OPERATION

❑ Check for an index pin on the high pressure pump shaft.

II - REFITTING OPERATION

❑ Refit the high pressure pump on the cylinder head by inserting it into the high pressure pump pulley.

Note:

Check that the high pressure pump shaft is correctly orientated in relation to the high pressure pump pulley.

❑ Refit the engine cover bracket.

❑ Fit the high pressure pump bolts without tightening them.

K9K, and 796

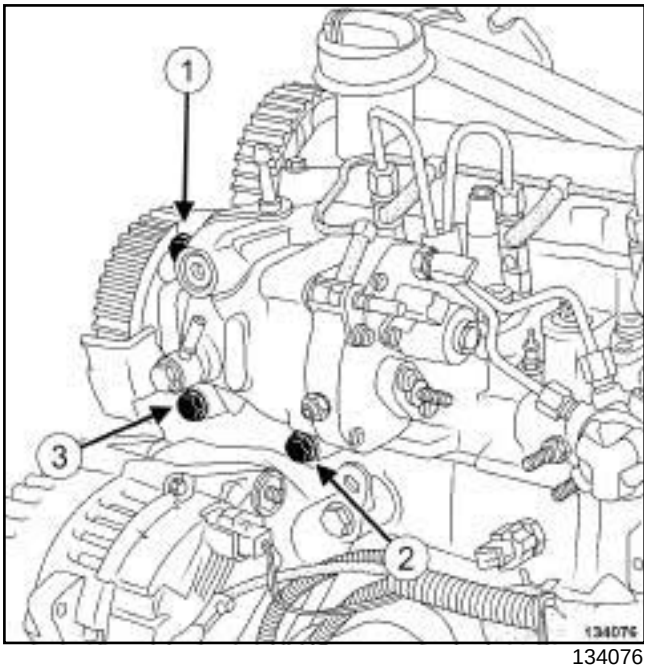

134076

❑ Torque tighten in order **the high pressure pump bolts (23 N.m)**.

❑ Torque tighten the **high pressure pump pulley nut (70 N.m)** while holding the high pressure pump pulley using a **32 mm** spanner.

> Note:
>
> Check that the timing belt is correctly positioned and in good condition.

❑ Remove thefrom the cylinder head.

III - FINAL OPERATION

❑ Remove the blanking plugs.

❑ Refit the high pressure pipe between the injector rail and the high pressure pump (see **13B**, **Diesel injection**, **High pressure pipe between pump and rail: Removal - Refitting**, page **13B-19**) .

❑ Refit (see **11A**, **Top and front of engine**, **Timing belt: Removal - Refitting**, page **11A-17**) :

- the suspended mounting on the cylinder head,
- the lower timing cover,
- the upper timing cover.

❑ Refit:

- the camshaft position sensor (see **13B**, **Diesel injection**, **Camshaft position sensor: Removal - Refitting**, page **13B-7**) ,
- the right-hand suspended engine mounting (see **19D**, **Engine mounting**, **Right-hand suspended engine mounting: Removal - Refitting**, page **19D-4**) ,
- the neck located on the injector rail.

❑ Secure the engine wiring on the neck.

❑ Connect:

- the camshaft position sensor,
- the accelerometer,
- the injector rail pressure sensor,
- the fuel return pipe connecting the injectors to the high-pressure pump,
- the supply and return pipes on the high pressure pump,
- the connectors to the high pressure pump,
- the injectors,
- the heater plugs.

❑ Refit the dipstick guide.

❑ Torque tighten the **dipstick guide and filler neck nuts on the high pressure rail (21 N.m)**.

❑ Connect the battery (see **Battery: Removal - Refitting**) (80A, Battery).

❑ Start the engine.

❑ Check that there are no fuel leaks.

❑ Refit the engine cover.

K9K

Equipment required
Diagnostic tool

Tightening torques ▽	
flow actuator bolts	**6 N.m**
dipstick guide and filler neck nuts on the high pressure rail	**21 N.m**

IMPORTANT
To avoid all risk of damage to the systems, apply the safety and cleanliness instructions and operation recommendations before carrying out any repair (see **Diesel injection: Precautions for the repair**) .

IMPORTANT

Before carrying out any work on the injection system, check using the **Diagnostic tool** :

- that the injector rail is not under pressure,

- that the fuel temperature is not too high.

It is essential to respect the safety and cleanliness advice whenever work is carried out on this system.

Working on the circuit with the engine running is strictly forbidden.

WARNING
To avoid any corrosion or damage, protect the areas on which fuel is likely to run.

REMOVAL

I - REMOVAL PREPARATION OPERATION

❑ Disconnect the battery (see **Battery: Removal - Refitting**) (80A, Battery).

❑ Remove the front engine cover.

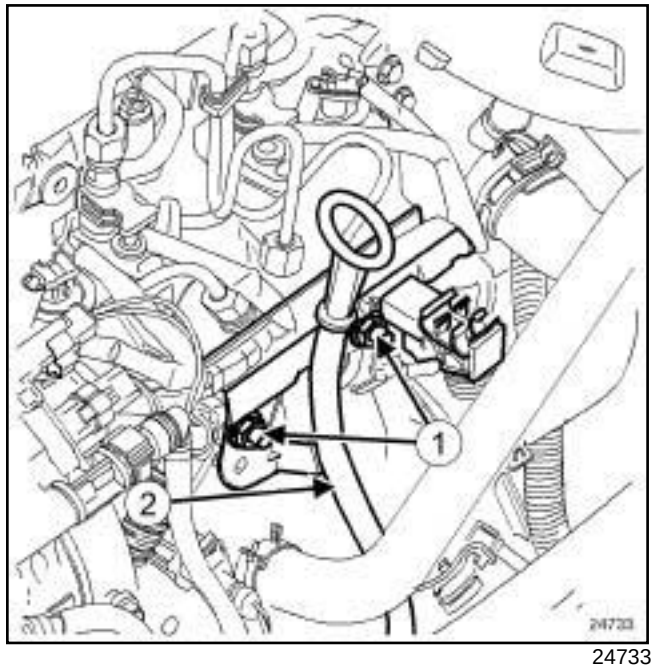

24733

❑ Remove the dipstick guide and filler neck nuts (**1**) .

❑ Put the dipstick guide to one side (**2**) .

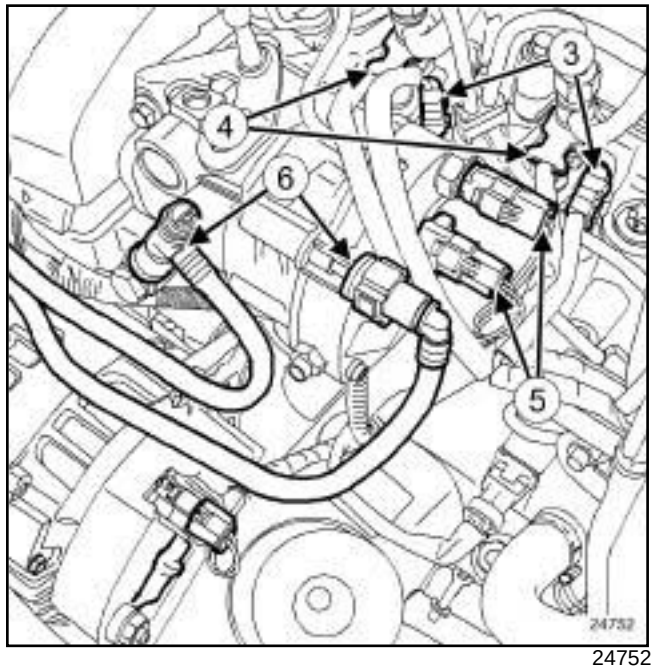

24752

❑ Disconnect:

- the heater plugs (**3**) ,

- the injectors (**4**) ,

- the connectors from the high pressure pump (**5**) ,

- the diesel supply and return pipes (**6**) .

K9K

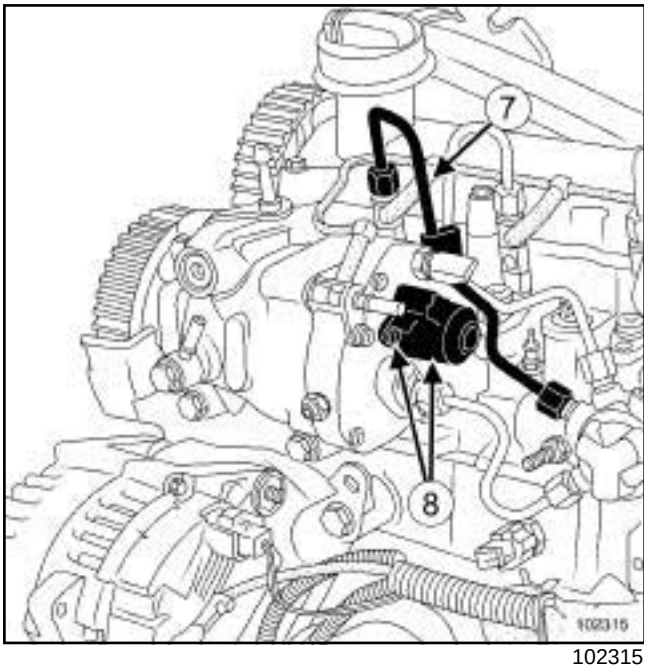

102315

❑ Disconnect:

- the injector rail pressure sensor,
- the accelerometer .

❑ Unclamp the engine wiring and put it to one side.

❑ Remove:

- the neck located on the injector rail,
- the high pressure pipe (**7**) between the injector rail and injector no. **4** (see **13B**, **Diesel injection**, **High pressure pipe between rail and injector: Removal - Refitting**, page **13B-22**) .

❑ Plug the openings.

II - REMOVAL OPERATION

❑ Loosen the fuel flow actuator bolts ***(8)*** .

> **WARNING**
> Do not use the electrical connector as a lever arm.

❑ Withdraw the fuel flow actuator (by hand using small successive turns).

REFITTING

I - REFITTING PREPARATION OPERATION

❑ Only unpack the new component when you are ready to fit it.

> **WARNING**
> Do not remove the blanking plugs from each component until the last moment.

> **WARNING**
> Do not damage the seal when refitting.

> Note:
> Do not lubricate the seals with grease or old diesel fuel. Use the applicator provided in the kit for the new part.

II - REFITTING OPERATION

❑ Position the flow actuator.

❑ Finger tighten the flow actuator bolts.

❑ Torque tighten the **flow actuator bolts (6 N.m)**.

III - FINAL OPERATION

❑ Refit the new high pressure pipe between the injector rail and injector no. **4** (see **13B**, **Diesel injection**, **High pressure pipe between rail and injector: Removal - Refitting**, page **13B-22**) .

❑ Connect:

- the diesel supply and return pipes on the high pressure pump,
- the electrical connectors on the high-pressure pump,
- the injectors,
- the heater plugs.

❑ Refit the dipstick guide.

❑ Torque tighten the **dipstick guide and filler neck nuts on the high pressure rail (21 N.m)**.

❑ Connect the battery (see **Battery: Removal - Refitting**) (80A, Battery).

❑ Start the engine.

❑ Check that there are no fuel leaks.

❑ Refit the engine cover.

K9K

Equipment required
Diagnostic tool

Tightening torques ▽	
Venturi bolt	**6 N.m**

IMPORTANT
To avoid all risk of damage to the systems, apply the safety and cleanliness instructions and operation recommendations before carrying out any repair (see **Diesel injection: Precautions for the repair**) .

IMPORTANT

Before carrying out any work on the injection system, check using the **Diagnostic tool** :

- that the injector rail is not under pressure,

- that the fuel temperature is not too high.

It is essential to respect the safety and cleanliness advice whenever work is carried out on this system.

Working on the circuit with the engine running is strictly forbidden.

IMPORTANT
Wear leaktight gloves (Nitrile type) for this operation.

Note:

Ensure that you have a new Venturi before opening up the fuel circuit.

REMOVAL

I - REMOVAL PREPARATION OPERATION

❏ Disconnect the battery (see **Battery: Removal - Refitting**) (80A, Battery).

❏ Remove the front engine cover.

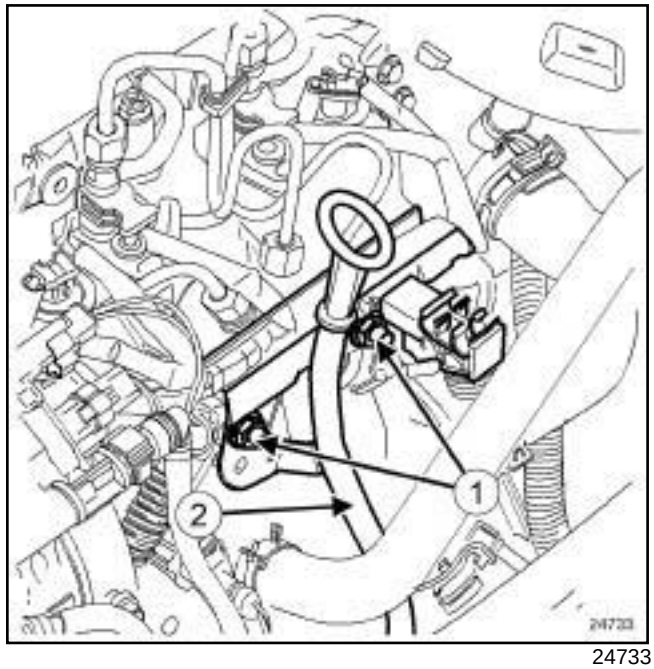

24733

❏ Remove the dipstick guide and filler neck nuts (**1**) .

❏ Put the dipstick guide to one side (**2**) .

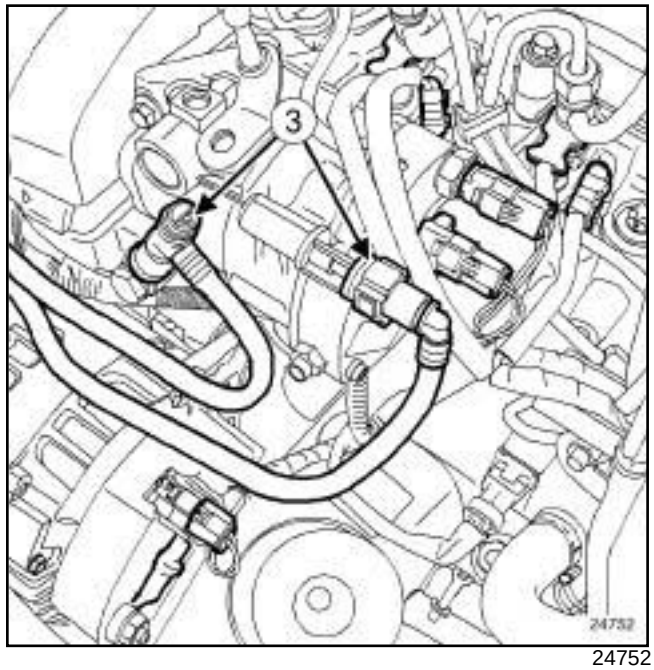

24752

❏ Disconnect the diesel supply and return pipes (**3**) .

K9K

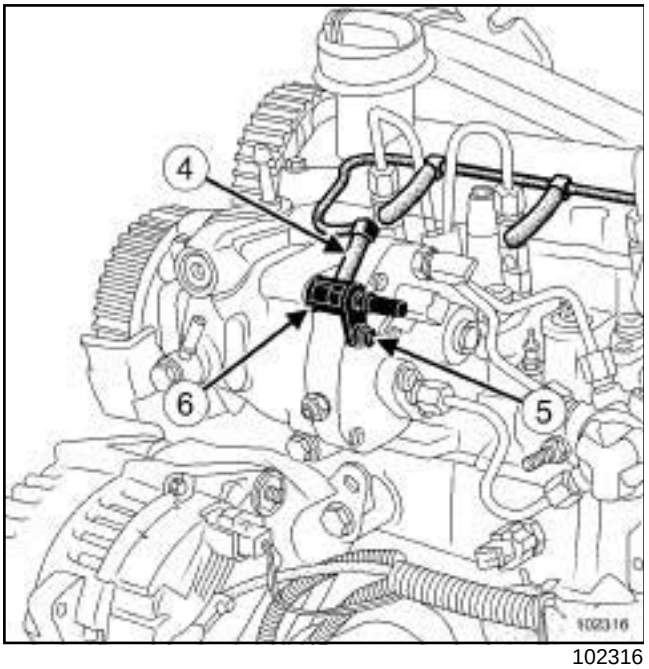

102316

❑ Disconnect the return pipe (**4**) connecting the injector to the high pressure pump.

II - REMOVAL OPERATION

❑ Remove:

- the bolt ***(5)*** of the Venturi ***(6)*** ,
- the Venturi.

❑ Plug the openings.

REFITTING

I - REFITTING PREPARATION OPERATION

❑

> **WARNING**
> Do not remove the blanking plugs from each component until the last moment.

❑ Lubricate the O-ring with lubricant from the applicator supplied with the new part.

II - REFITTING OPERATION

❑ **parts always to be replaced: Venturi**.

> Note:
> Do not damage the seal when refitting.

❑ Fit the Venturi.

❑ Torque tighten the **Venturi bolt (6 N.m)**.

III - FINAL OPERATION

❑ Connect the return pipe connecting the injector to the high-pressure pump.

❑ Connect the battery (see **Battery: Removal - Refitting**) (80A, Battery).

❑ Start the engine.

❑ Check that there are no fuel leaks.

❑ Refit the engine cover.

K9K

Equipment required
Diagnostic tool

❑

WARNING
Check that there are no diesel leaks after each operation.

Note:

the **Diagnostic tool** can be used for testing the high pressure circuit with the engine running. This command can be used to run fault finding on a leak due to an incorrectly fitted or tightened union. This command only works if the engine coolant temperature is over **60°C**. The fault finding procedure does not reveal small leaks caused by insufficient tightening.

Note:

Respect the repair precautions (see **Diesel injection: Precautions for the repair**) .

CHECK

❑ Remove the front engine cover.

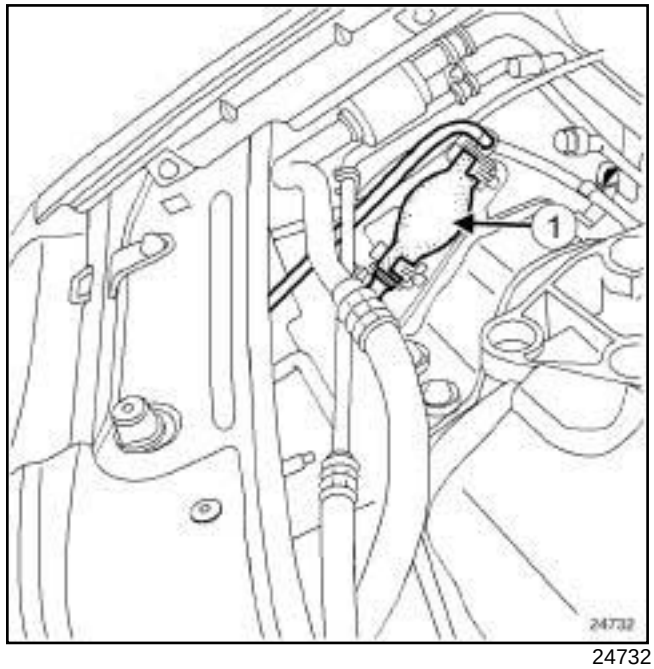

24732

❑ Prime the fuel circuit using the manual priming pump (**1**) until the transparent pipes are filled with fuel (automatic degassing).

❑ Check that there are no fuel leaks.

❑ Connect the **Diagnostic tool** to the vehicle.

❑ Deal with present faults,

Note:

Certain faults will prevent this test from being carried out: deal with them first.

Note:

The engine automatically runs a cycle of four accelerations and decelerations to lower the rail pressure.

WARNING
Do not leave anything on the side of the engine housing during the test phase (significant vibration).

❑ Run command **AC 626 - high pressure circuit sealing test**.

❑ Check that there are no fuel leaks.

❑ Deal with the causes of any possible leaks.

❑ Use the **Diagnostic tool** to check for stored faults; deal with these and clear them as necessary.

❑ Disconnect the **Diagnostic tool**.

K9K

Equipment required
Diagnostic tool

Tightening torques ▽	
nut of the high pressure pipe between the pump and the injector rail on the high pressure pump	**28 N.m**
nut of the high pressure pipe between the pump and the rail on the injector rail	**28 N.m**
dipstick guide and filler neck nuts on the high pressure rail	**21 N.m**

IMPORTANT
To avoid all risk of damage to the systems, apply the safety and cleanliness instructions and operation recommendations before carrying out any repair (see **Diesel injection: Precautions for the repair**) .

IMPORTANT

Before carrying out any work on the injection system, check using the **Diagnostic tool** :

- that the rail is not under pressure,

- that the fuel temperature is not too high.

It is essential to respect the safety and cleanliness advice whenever work is carried out on this system.

Working on the circuit with the engine running is strictly forbidden.

IMPORTANT
Wear leaktight gloves (Nitrile type) for this operation.

WARNING
To avoid any corrosion or damage, protect the areas on which fuel is likely to run.

REMOVAL

I - REMOVAL PREPARATION OPERATION

❑ Disconnect the battery (see **Battery: Removal - Refitting**) (80A, Battery).

❑ Remove the front engine cover.

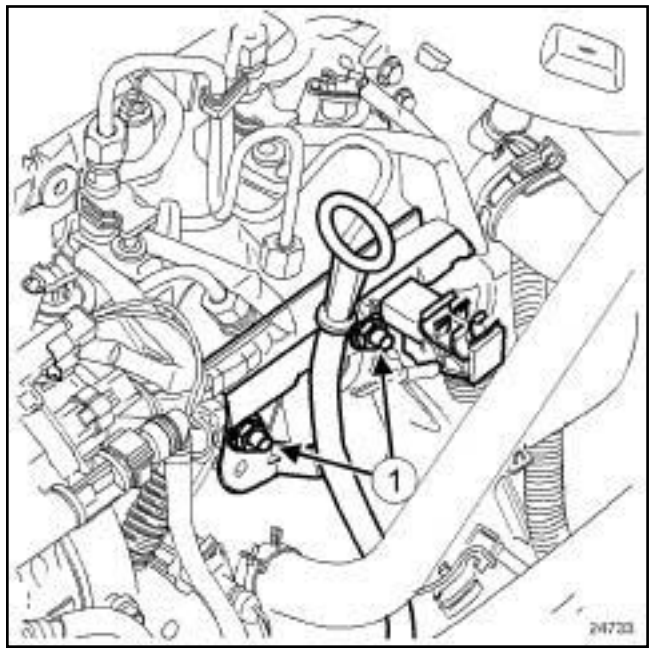

24733

❑ Remove the dipstick guide and filler neck bolts (**1**) .

❑ Put the dipstick to one side.

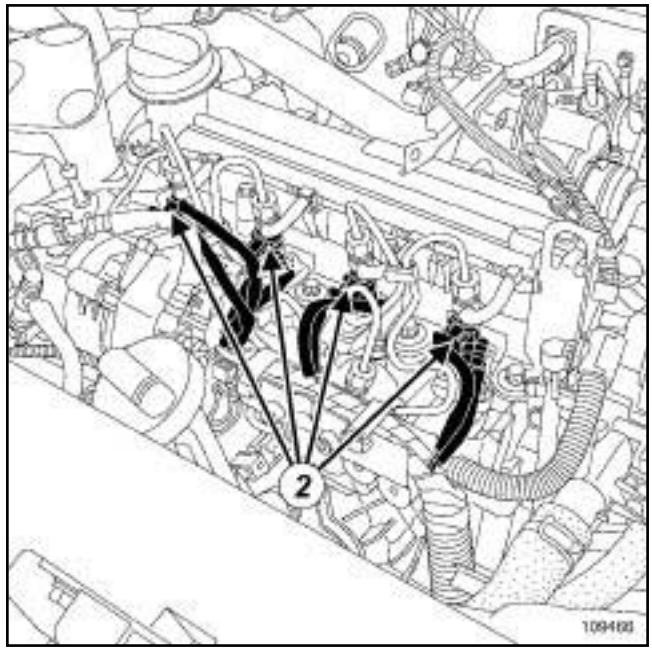

109466

❑ Disconnect the following connectors (**2**) :

- the heater plugs,

K9K

- the injectors.

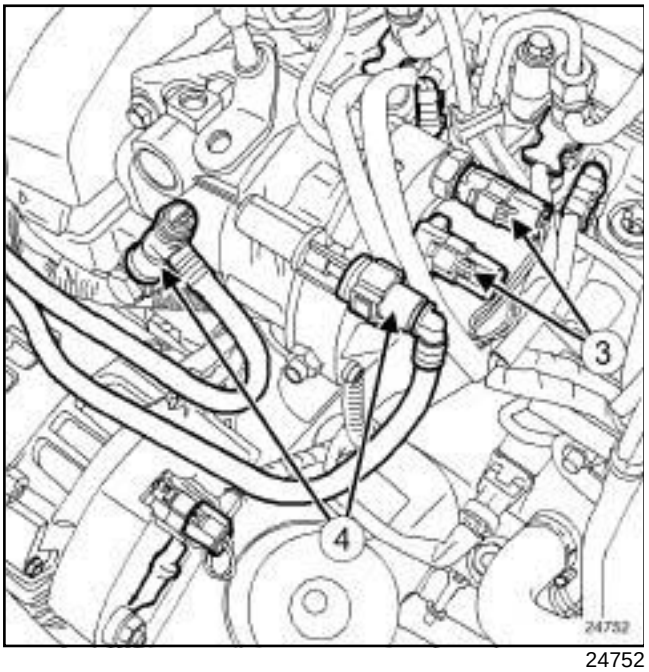

24752

❑ Disconnect:

- the high pressure pump connectors (**3**) .
- the injector rail pressure sensor.

❑ Clean the diesel supply and return pipes (see **Diesel injection: Precautions for the repair**) .

❑ Disconnect the diesel supply and return pipes (**4**) .

❑ Disconnect the return pipe connecting the injectors to the high pressure pump.

❑ Fit the correct blanking plugs.

❑ Move the wiring to one side with the neck on the side.

❑ Clean the high pressure pipe unions between the rail and the injectors (see **Diesel injection: Precautions for the repair**) .

II - REMOVAL OPERATION

❑ Clean the unions of the high pressure pipe between the high pressure pump and the injector rail (see **Diesel injection: Precautions for the repair**) .

❑ Undo:

- the high pressure pipe nut at the high pressure pump end,
- the high pressure pipe nut at the injector rail end.

❑ Fit blanking plugs into the openings.

REFITTING

I - REFITTING PREPARATION OPERATION

❑ **parts always to be replaced: High pressure pipe between the pump and rail**.

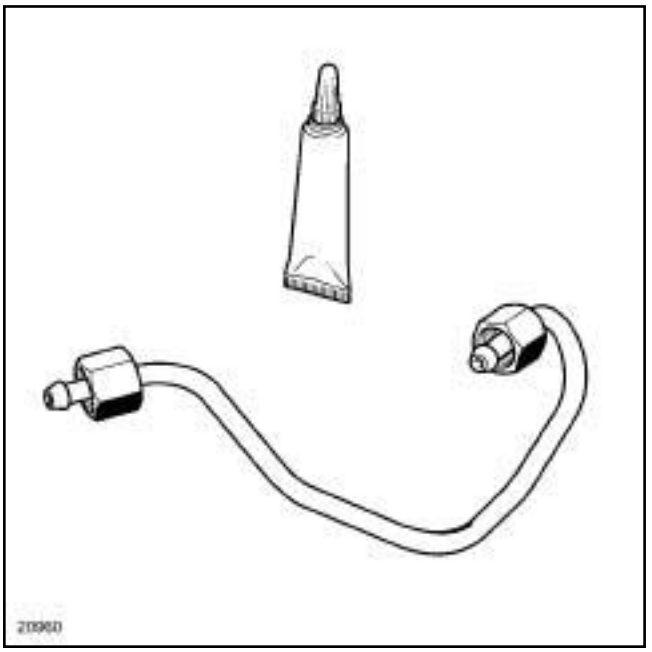

20960

❑

WARNING

Before fitting a new high pressure pipe, lightly lubricate the nut threads with oil from the applicator provided with the new part.

Be careful not to allow oil into the high pressure pipe.

Do not lubricate high pressure pipes supplied without an applicator, as these high pressure pipes are self-lubricating.

WARNING

Do not remove the blanking plugs from each component until the last moment.

II - REFITTING OPERATION

❑ Remove the blanking plugs.

❑ Insert the high pressure pipe olive in the high pressure pump high pressure outlet taper.

❑ Insert the high pressure pipe olive into the injector rail inlet taper.

❑ Finger tighten the high-pressure pipe nuts, starting with the one at the injector rail side.

K9K

- ❑ Slightly pretighten the high pressure pipe nuts.
- ❑ Torque tighten:
  - the **nut of the high pressure pipe between the pump and the injector rail on the high pressure pump (28 N.m)**,
  - the **nut of the high pressure pipe between the pump and the rail on the injector rail (28 N.m)**.

III - FINAL OPERATION

- ❑ Refit the neck on the injector rail.
- ❑ Connect:
  - the injection rail pressure sensor,
  - the diesel return pipe connecting the injectors to the high pressure pump,
  - the diesel fuel supply and return pipes,
  - the high pressure pump electrical connectors.
- ❑ Connect the connectors of:
  - the injectors,
  - the heater plugs.
- ❑ Insert the dipstick.
- ❑ Refit the dipstick guide.
- ❑ Torque tighten the **dipstick guide and filler neck nuts on the high pressure rail (21 N.m)**.
- ❑ Connect the battery (see **Battery: Removal - Refitting**) (80A, Battery).
- ❑ Prime the diesel circuit using the priming pump.
- ❑ Check the high pressure circuit (see **13B**, **Diesel injection**, **High pressure pipe: Check**, page **13B-18**) .
- ❑ Refit the engine cover.

K9K

Equipment required
Diagnostic tool

Tightening torques ▽	
injector rail nuts	**28 N.m**
« pump - rail» high pressure pipe nuts	**28 N.m**
dipstick guide and filler neck nuts on the high pressure rail	**21 N.m**

IMPORTANT
To avoid all risk of damage to the systems, apply the safety and cleanliness instructions and operation recommendations before carrying out any repair (see **Diesel injection: Precautions for the repair**) .

IMPORTANT

Before carrying out any work on the injection system, check using the **Diagnostic tool** :

- that the rail is not under pressure,

- that the fuel temperature is not too high.

It is essential to respect the safety and cleanliness advice whenever work is carried out on this system.

Working on the circuit with the engine running is strictly forbidden.

IMPORTANT
Wear leaktight gloves (Nitrile type) for this operation.

WARNING
To avoid any corrosion or damage, protect the areas on which fuel is likely to run.

REMOVAL

I - REMOVAL PREPARATION OPERATION

❑ Disconnect the battery (see **Battery: Removal - Refitting**) (80A, Battery).

❑ Remove:

- the engine cover,

- the air filter unit (see **12A**, **Fuel mixture**, **Air filter unit: Removal - Refitting**, page **12A-6**) .

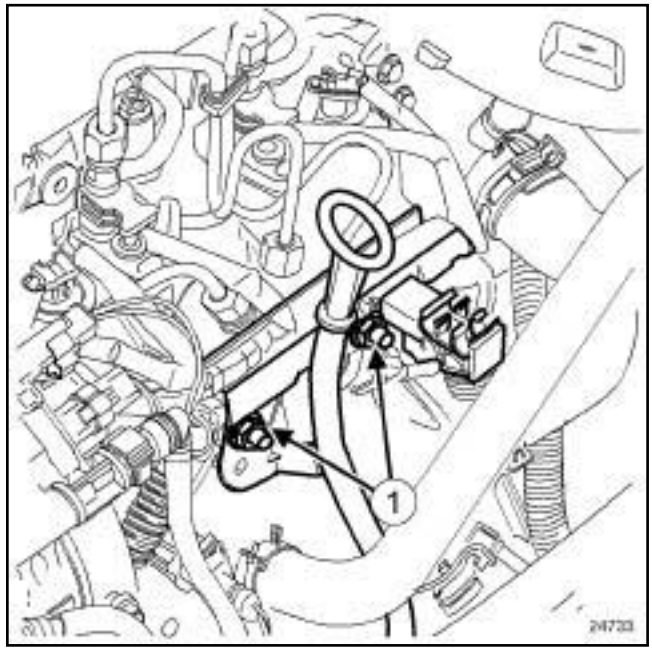

24733

❑ Remove the nuts (**1**) from the dipstick guide and neck.

❑ Put the dipstick to one side.

K9K

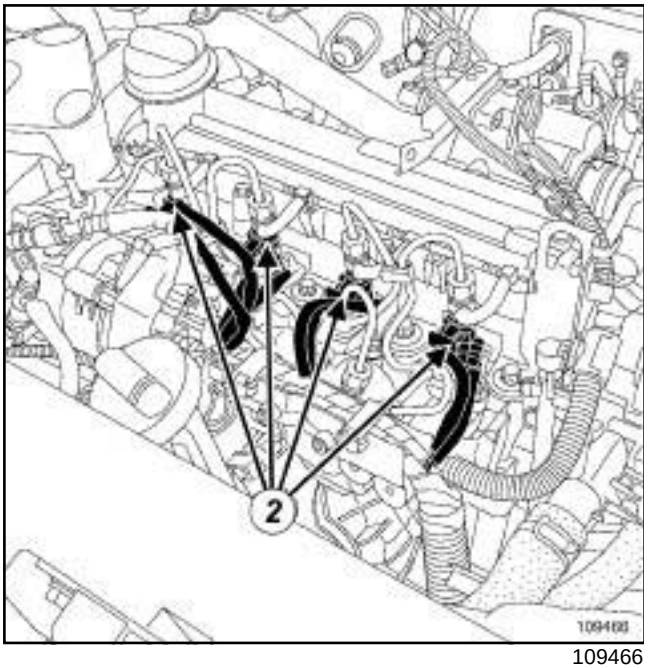

109466

❑ Disconnect the following connectors (**2**) :

- the heater plugs,
- the injectors.

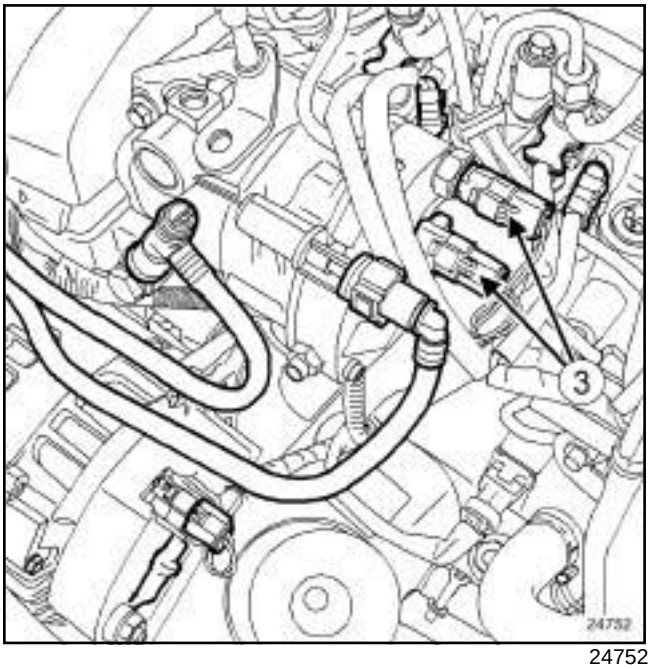

24752

❑ Disconnect the high pressure pump connectors (**3**) .

❑ Remove the bolts mounting the neck onto the injector rail.

❑ Move the wiring to one side with the neck on the side.

❑ Remove the clips connecting the high pressure pipes.

❑ Clean the high pressure pipe unions between the rail and the injectors (see **Diesel injection: Precautions for the repair**) .

II - REMOVAL OPERATION

❑ Undo:

- the high pressure nut at the injector end,
- the high pressure pipe nut at the injector rail end.

❑ Remove the pipe and discard it.

❑ Fit blanking plugs into the openings.

REFITTING

I - REFITTING PREPARATION OPERATION

❑ **parts always to be replaced: High pressure pipe between the rail and injector**.

K9K

20960

❑

WARNING

Before fitting a new high pressure pipe, lightly lubricate the nut threads with oil from the applicator provided with the new part.

Be careful not to allow oil into the high pressure pipe.

Do not lubricate high pressure pipes supplied without an applicator, as these high pressure pipes are self-lubricating.

WARNING

Do not remove the blanking plugs from each component until the last moment.

❑ If replacing the four high pressure pipes:

- loosen the injector rail nuts by a few turns (the injector rail should be loose).

II - REFITTING OPERATION

❑ Remove the blanking plugs.

❑ Insert the high pressure pipe olive in the injector high pressure inlet taper.

❑ Position the high pressure pipe olive in the high pressure outlet taper of the injector rail.

❑ Finger tighten the high pressure pipe nuts, starting with the nut at the injector end.

❑ Slightly pretighten the high pressure pipe nuts.

Note:

The assembly order of the « rail-injector » high pressure pipes is not important.

❑ Mount a new clip provided with the new high pressure pipe.

❑ If replacing the four high pressure pipes, torque tighten the **injector rail nuts (28 N.m)**.

❑ Torque tighten in order the **« pump - rail » high pressure pipe nuts (28 N.m)** :

- injectors end,

- on the injector rail end.

Note:

Tighten each pipe fully before moving on to the next pipe.

III - FINAL OPERATION

❑ Refit the neck on the injector rail.

❑ Connect the connectors of:

- the injectors,

- the heater plugs.

❑ Insert the dipstick.

❑ Refit the dipstick guide.

❑ Torque tighten the **dipstick guide and filler neck nuts on the high pressure rail (21 N.m)**.

❑ Connect the battery (see **Battery: Removal - Refitting**) (80A, Battery).

❑ Prime the diesel circuit using the priming pump.

❑ Check the high pressure circuit (see **13B**, **Diesel injection**, **High pressure pipe: Check**, page **13B-18**) .

❑ Refit:

- the air filter unit (see **12A**, **Fuel mixture**, **Air filter unit: Removal - Refitting**, page **12A-6**) .

- the engine cover,

K9K

Equipment required
Diagnostic tool

Tightening torques ▽	
injector rail nuts	**28 N.m**
nuts of the neck and dipstick guide on the injector rail	**21 N.m**

IMPORTANT
To avoid all risk of damage to the systems, apply the safety and cleanliness instructions and operation recommendations before carrying out any repair (see **Diesel injection: Precautions for the repair**) .

IMPORTANT

Before starting any work on the injection circuit, use the **Diagnostic tool** to check:

- that the injector rail is not under pressure,

- that the fuel temperature is not too high.

It is essential to respect the safety and cleanliness advice whenever work is carried out on this system.

Working on the circuit with the engine running is strictly forbidden.

IMPORTANT
Wear leaktight gloves (Nitrile type) for this operation.

REMOVAL

I - REMOVAL PREPARATION OPERATION

❏ Disconnect the battery (see **Battery: Removal - Refitting**) (80A, Battery).

❏ Remove the front engine cover.

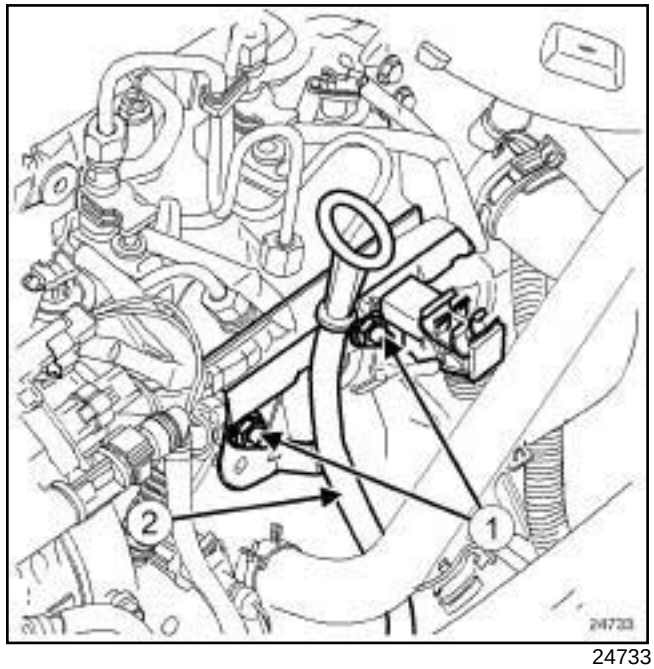

24733

❏ Remove the nuts (**1**) from the dipstick guide and neck.

❏ Put the engine oil dipstick guide to one side (**2**) .

K9K

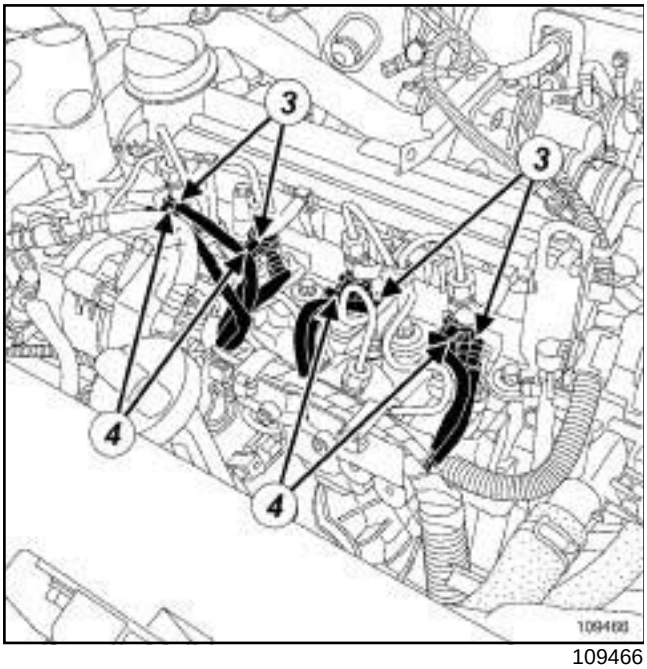

109466

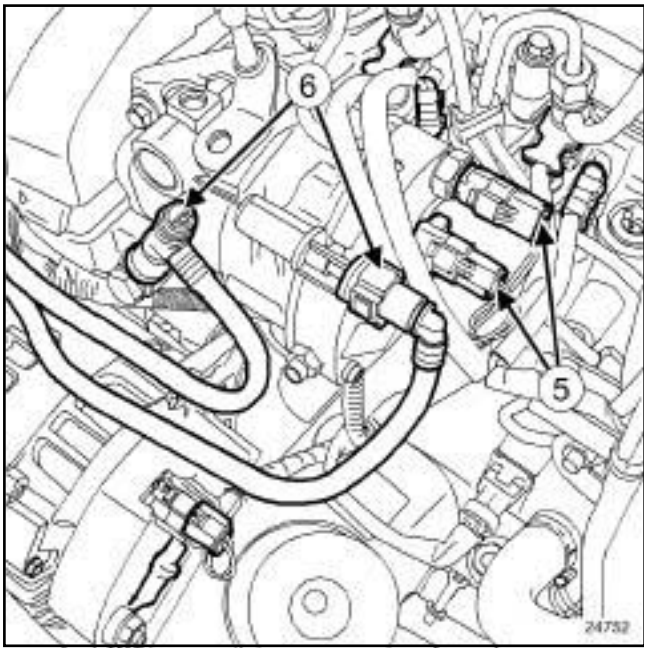

24752

❑ Disconnect:

- the heater plugs (**3**) ,
- the injectors (**4**) ,
- the connectors on the high pressure pump (**5**) ,
- the diesel return pipe connecting the injectors to the high pressure injection pump.

❑ Clean the diesel supply and return pipes (see **Diesel injection: Precautions for the repair**) .

❑ Disconnect the diesel supply and return pipes (**6**) .

❑ Place blanking plugs on the openings.

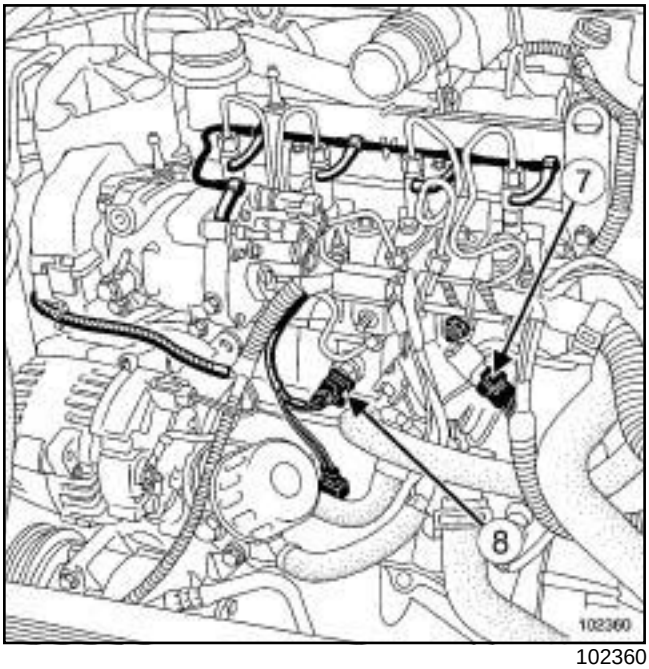

102360

❑ Disconnect:

- the pressure sensor (**7**) from the injector rail,
- the accelerometer (**8**) .

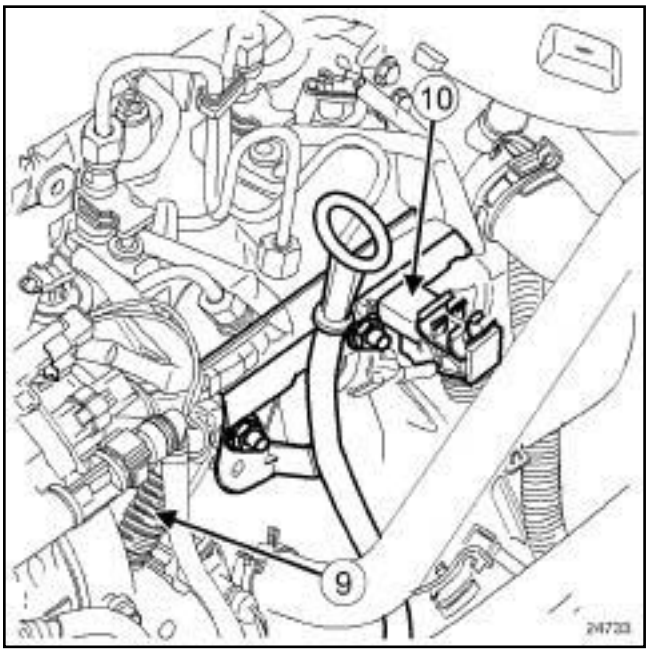

24733

❑ Unclamp the engine wiring (**9**) and place it to one side.

❑ Remove:

- the neck (**10**) located on the spherical injector rail,
- the high pressure pipe between the high pressure pump and the injector rail (see **13B**, **Diesel injection**, **High pressure pipe between pump and rail: Removal - Refitting**, page **13B-19**) ,

- the high pressure pipes between the injector rail and the injectors (see **13B**, **Diesel injection**, **High pressure pipe between rail and injector: Removal - Refitting**, page **13B-22**) .

II - OPERATION FOR REMOVAL OF PART CONCERNED

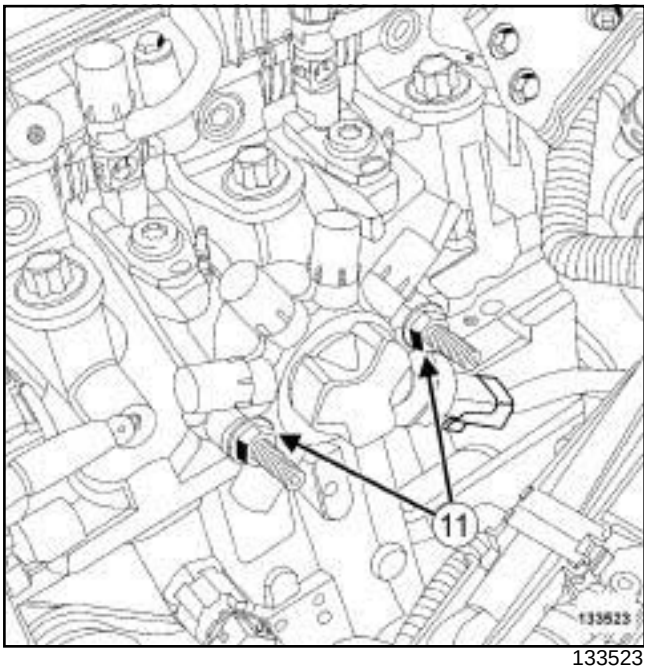

133523

❑ Remove:

- the nuts (**11**) from the injector rail,
- the injector rail.

REFITTING

I - REFITTING OPERATION FOR PART CONCERNED

❑

> **WARNING**
> Do not remove the blanking plugs from each component until the last moment.

❑ Fit the injector rail.

❑ Finger tighten the nuts.

❑ Refit:

- the high pressure pipes between the injector rail and the injectors (see **13B**, **Diesel injection**, **High pressure pipe between rail and injector: Removal - Refitting**, page **13B-22**) ,
- the high pressure pipe between the high pressure pump and the injector rail (see **13B**, **Diesel injection**, **High pressure pipe between pump and rail: Removal - Refitting**, page **13B-19**) .

❑ Torque tighten the **injector rail nuts (28 N.m)**.

II - FINAL OPERATION

❑ Refit the neck located on the injector rail.

❑ Secure the engine wiring on the neck.

❑ Connect:

- the accelerometer,
- the injector rail pressure sensor,
- the diesel return pipe connecting the injectors to the high pressure pump,
- the diesel supply and return pipes on the high pressure pump,
- the connectors to the high pressure pump,
- the injectors,
- the heater plugs.

❑ Refit the dipstick guide.

❑ Torque tighten the **nuts of the neck and dipstick guide on the injector rail (21 N.m)**.

❑ Start the engine.

❑ Check that there are no fuel leaks.

❑ Check the high pressure circuit (see **13B**, **Diesel injection**, **High pressure pipe: Check**, page **13B-18**) .

❑ Refit the engine cover.

❑ Connect the battery (see **Battery: Removal - Refitting**) (80A, Battery).

K9K

Equipment required
Diagnostic tool

Tightening torques ▽	
fuel temperature sensor	**15 N.m**

IMPORTANT

To avoid all risk of damage to the systems, apply the safety and cleanliness instructions and operation recommendations before carrying out any repair (see **Diesel injection: Precautions for the repair**) .

IMPORTANT

Before carrying out any work on the injection system, check using the **Diagnostic tool** :

- that the rail is not under pressure,

- that the fuel temperature is not too high.

It is essential to respect the safety and cleanliness advice whenever work is carried out on this system.

Working on the circuit with the engine running is strictly forbidden.

REMOVAL

❑

Note:

Make sure you have a new diesel temperature sensor before removal.

I - REMOVAL PREPARATION OPERATION

❑ Remove the front engine cover.

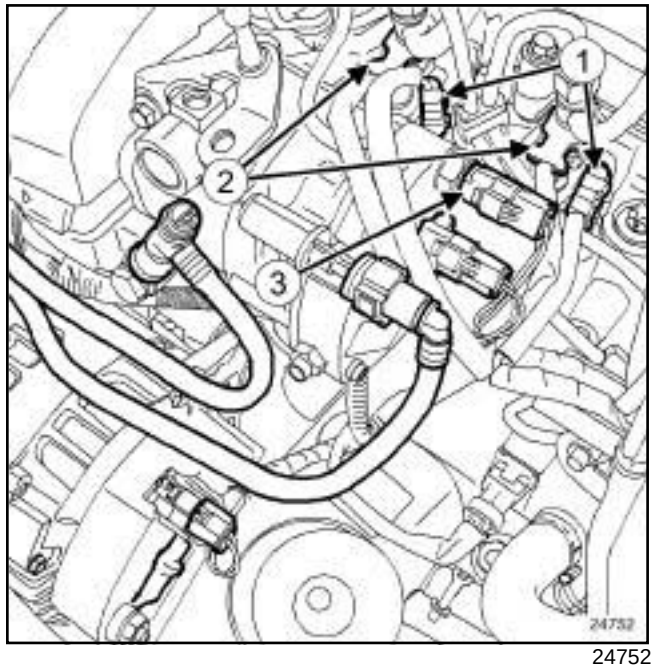

24752

❑ Disconnect:

- the heater plugs (**1**) on cylinders **3** and **4**,

- the injectors (**2**) of cylinders **3** and **4**,

II - REMOVAL OPERATION

❑ Disconnect the fuel temperature sensor connector ***(3)*** .

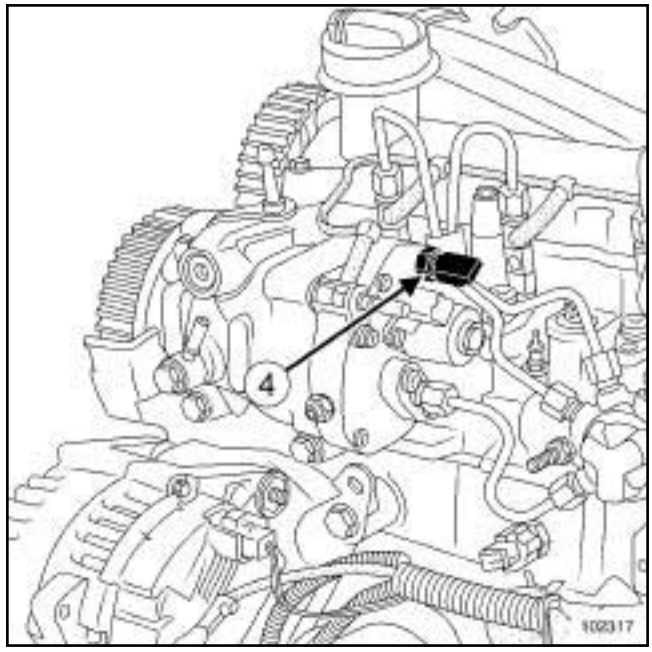

102317

❑ Clean the fuel temperature sensor.

❑ Remove the fuel temperature sensor (**4**) .

❑ Plug the openings.

K9K

REFITTING

I - REFITTING PREPARATION OPERATION

❑ Lubricate the O-ring with lubricant from the applicator supplied with the new part.

II - REFITTING OPERATION

❑

> Note:
>
> Do not damage the O-ring when refitting.

❑ Remove the blanking plugs.

❑ Fit the fuel temperature sensor.

❑ Torque tighten the **fuel temperature sensor (15 N.m)**.

❑ Connect the connector ***(3)*** of the fuel temperature sensor.

III - FINAL OPERATION

❑ Connect:

- the injectors ***(2)*** of cylinders **3** and **4**,
- the heater plugs ***(1)*** on cylinders **3** and **4**.

❑ Start the engine.

❑ Check that there are no fuel leaks.

❑ Refit the engine cover.

K9K

Equipment required
Diagnostic tool

PARTS AND CONSUMABLES FOR THE REPAIR

Consumables:

- cleaning cloths (see **Vehicle: Parts and consumables for the repair**) (04B, Consumables - Products).
- set of K9K blanking plugs (**DELPHI** injection) (see **Vehicle: Parts and consumables for the repair**) (04B, Consumables - Products).

IMPORTANT
To avoid all risk of damage to the systems, apply the safety and cleanliness instructions and operation recommendations before carrying out any repair (see **Diesel injection: Precautions for the repair**) .

CHECK

❑ Remove the air filter unit (see **12A**, **Fuel mixture**, **Air filter unit: Removal - Refitting**, page **12A-6**) .

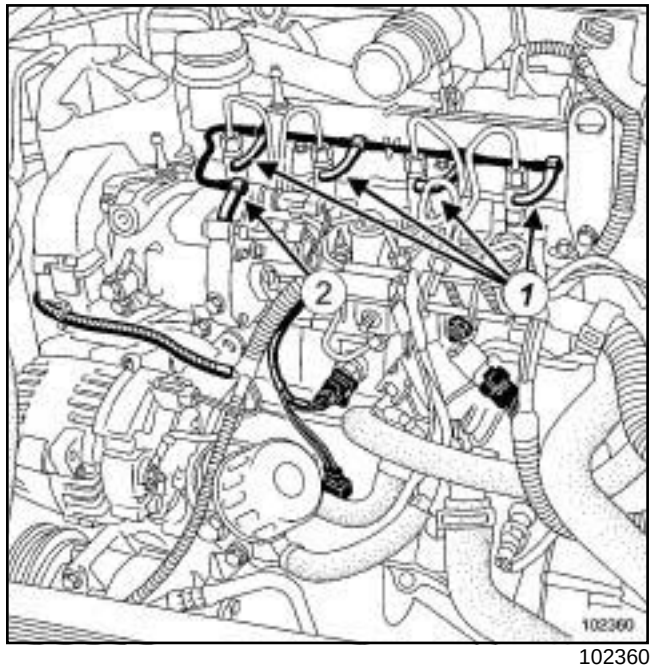

102360

❑ Disconnect:

- the diesel return pipes (**1**) on the injectors,
- the diesel return pipe (**2**) on the venturi attached to the high pressure pump.

Note:
Make preparations for fuel outflow.

❑ Fit the correct blanking plug on the venturi.

Note:
It is essential to fit an appropriate blanking plug to the Venturi to avoid depriming the diesel return circuit.

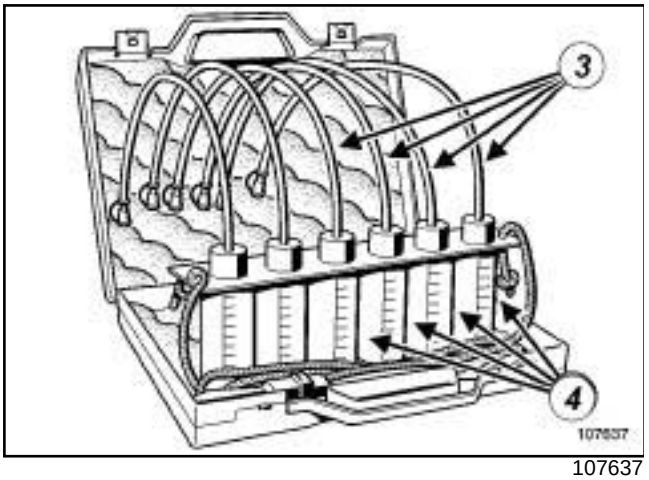

107637

- Connect four of the transparent pipes (**3**) of theonto the diesel injector return.
- Insert these pipes in the four graduated measuring cylinders (**4**) of the.

> Note:
>
> If necessary, attach the graduated measuring cylinder rail of theto the bonnet.

- Connect the **Diagnostic tool** to the vehicle.
- Follow the instructions given in test 9: Injector sealing test (see **Fault finding - Test)** (13B, Diesel injection).
- Disconnect the transparent pipes from the.
- Remove the transparent pipes from the graduated measuring cylinder of the.
- Empty the diesel fuel out of the graduated measuring cylinders.
- Connect:
  - the diesel return pipes on the injectors,
  - the diesel return pipe to the Venturi attached to the high pressure pump.
- Replace the faulty injector(s) (see **13B**, **Diesel injection**, **Diesel injector: Removal - Refitting**, page **13B-32**) .
- Check that there are no fuel leaks.
- Use the **Diagnostic tool** to check for the absence of stored faults, deal with them and clear them, as necessary.
- Disconnect the **Diagnostic tool**.
- Refit the air filter unit (see **12A**, **Fuel mixture**, **Air filter unit: Removal - Refitting**, page **12A-6**) .

K9K

Equipment required
Diagnostic tool

Tightening torques ▽	
diesel injector clamp bolt	**28 N.m**
injector rail nuts	**28 N.m**
« rail-injector» high pressure pipe nuts	**24 N.m**
nuts of the neck and dipstick guide on the injector rail	**21 N.m**

IMPORTANT
To avoid all risk of damage to the systems, apply the safety and cleanliness instructions and operation recommendations before carrying out any repair (see **Diesel injection: Precautions for the repair**) .

IMPORTANT

Before carrying out any work on the injection system, check using the **Diagnostic tool** :

- that the injector rail is not under pressure,

- that the fuel temperature is not too high.

It is essential to respect the safety and cleanliness advice whenever work is carried out on this system.

Working on the circuit with the engine running is strictly forbidden.

IMPORTANT
Wear leaktight gloves (Nitrile type) for this operation.

Injectors may be replaced individually.

REMOVAL

I - REMOVAL PREPARATION OPERATION

❏ Disconnect the battery (see **Battery: Removal - Refitting**) (80A, Battery).

❏ Remove:

- the engine cover,

- the air filter unit (see **12A**, **Fuel mixture**, **Air filter unit: Removal - Refitting**, page **12A-6**) .

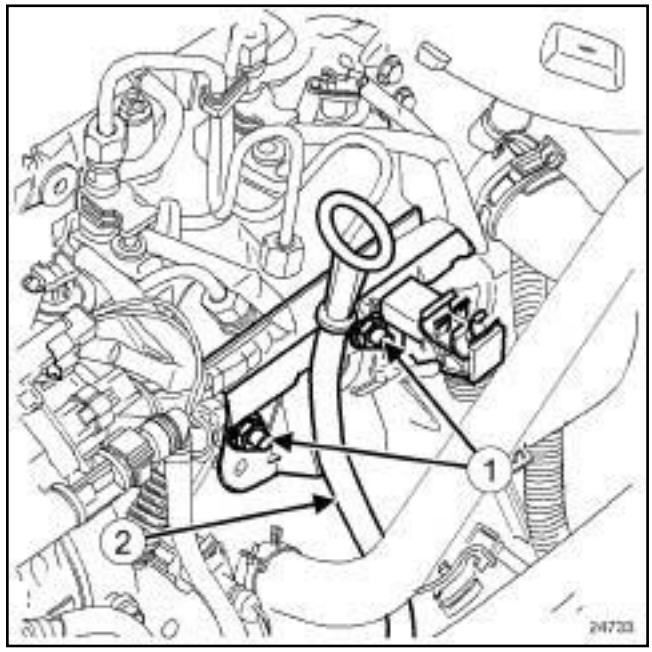

24733

❏ Remove the nuts (**1**) from the dipstick guide and neck.

❏ Put the engine oil dipstick guide to one side (**2**) .

K9K

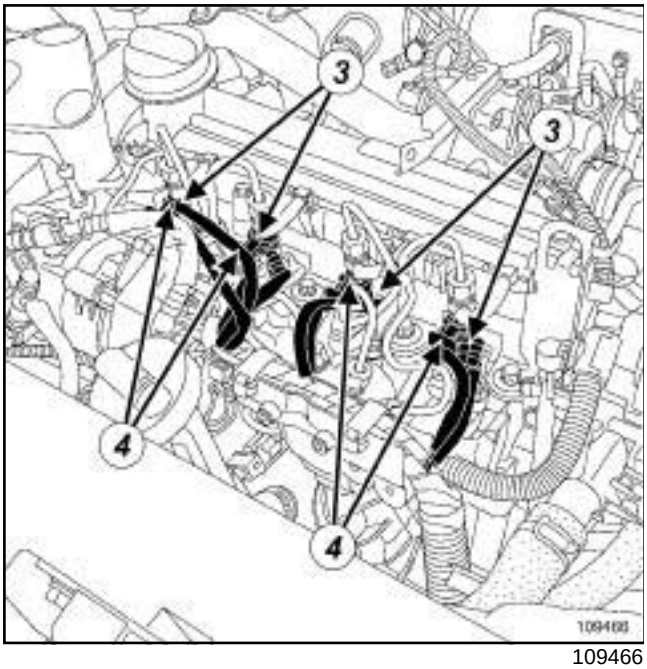

109466

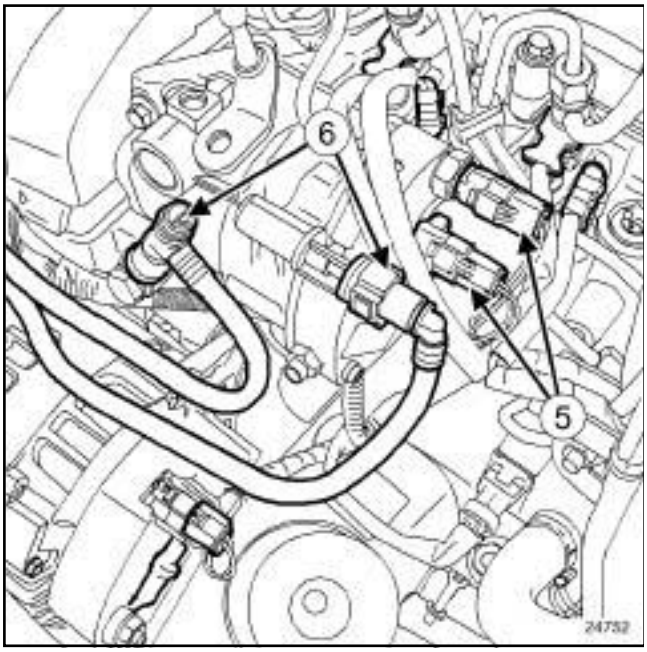

24752

❑ Disconnect:

- the heater plugs (**3**) ,
- the injectors (**4**) ,
- the connectors (**5**) on the high pressure pump,
- the diesel return pipe connecting the injectors to the high pressure injection pump.

❑ Clean the diesel supply and return pipes (see **Diesel injection: Precautions for the repair**) .

❑ Disconnect the diesel supply and return pipes (**6**) .

❑ Plug the openings.

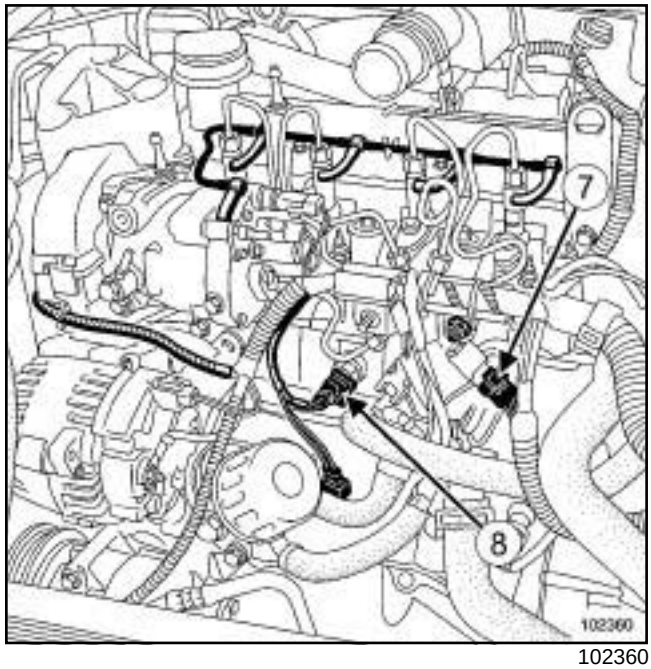

102360

❑ Disconnect:

- the pressure sensor (**7**) from the injector rail,
- the accelerometer (**8**) .

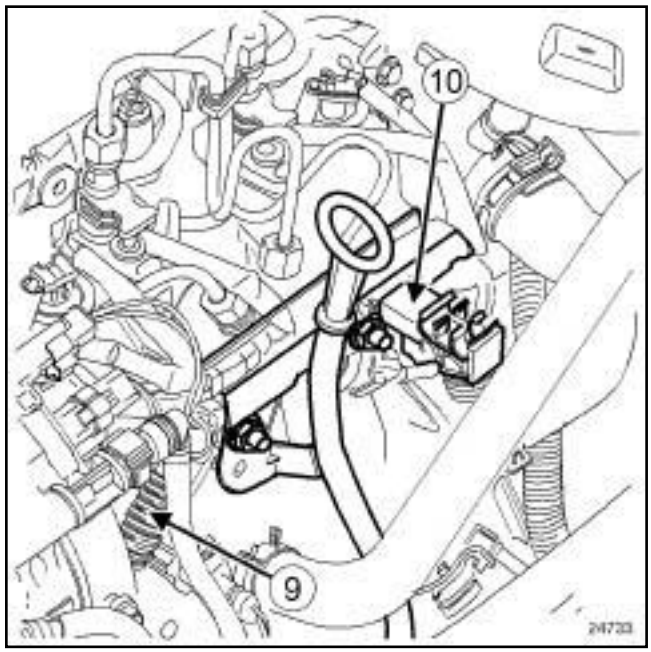

24733

❑ Unclamp the engine wiring (**9**) and place it to one side.

❑ Remove the neck (**10**) located on the injector rail.

❑ Remove the « rail-injector » high pressure pipes (see **13B**, **Diesel injection**, **High pressure pipe between rail and injector: Removal - Refitting**, page **13B-22**) .

❑ Plug the openings.

K9K

II - OPERATION FOR REMOVAL OF PART CONCERNED

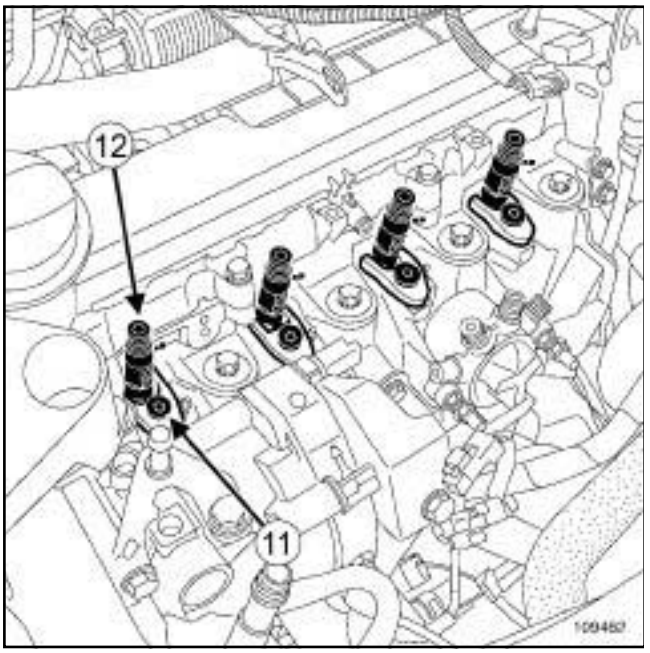

109462

❑ Loosen the injector clamp bolt (**11**) .

> Note:
>
> If reusing a diesel injector, always mark the removed diesel injector in relation to its cylinder.

❑ Remove the diesel injector (**12**) .

> Note:
>
> If the diesel injector is jammed, remove the injector using the tooland the tool.

❑ Remove the heat protection washer.

> Note:
>
> If the heat protection washer is stuck at the bottom of the well, use the (see **Injector well cleaning tool: Use**) (Technical Note 6040A, 13B, Diesel injection).

REMOVING THE INJECTORS USING TOOLS (MOT. 921-01) AND (EMB. 880)

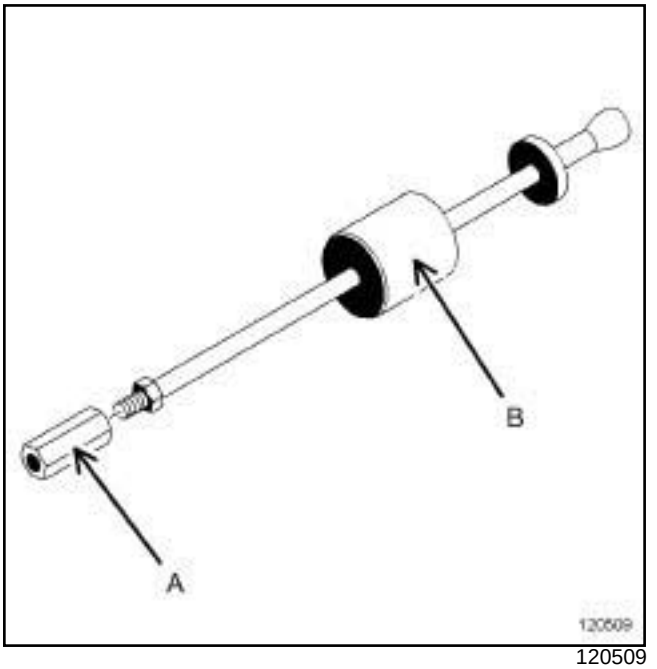

120509

(**A**)	Tool for extracting injector holders (Mot. 921-01).
(**B**)	Pin extractor (Emb. 880).

❑ Fit the toolon the extractor

❑ Apply releasing agent around the diesel injector.

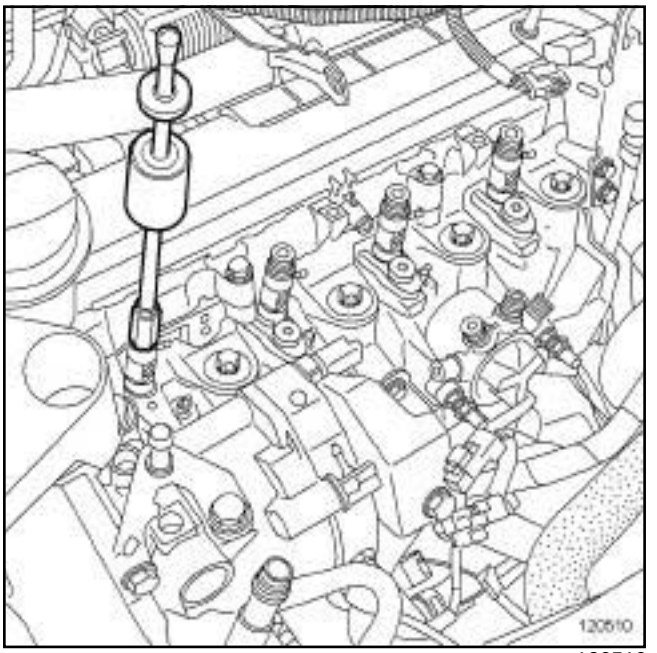

120510

❑ Fit the slide hammer onto the diesel injector.

❑ Extract the jammed injector using the slide hammer.

K9K

REFITTING

I - REFITTING PREPARATION OPERATION

❑ Always replace the heat protection washer of the diesel injector concerned.

Cleaning parts

❑

> **WARNING**
>
> It is strictly forbidden to clean the injectors with:
>
> - a wire brush,
> - an emery cloth,
> - an ultrasonic cleaner.

❑ Always clean the well of the removed injector (see **Injector well cleaning tool: Use**) (Technical Note 6040A, 13B, Diesel injection).

❑ If reusing the removed injector:

- clean the injector using a **CLOTH FOR INJECTION SYSTEM** soaked in **INJECTOR CLEANER** or **BRAKE CLEANER** (see **Vehicle: Parts and consumables for the repair**) (04B, Consumables - Products),
- if necessary, leave the injector nozzle to soak in **INJECTOR CLEANER** (see **Vehicle: Parts and consumables for the repair**) (04B, Consumables - Products),
- wipe the injector with a new **CLOTH FOR INJECTION SYSTEM**, (see **Vehicle: Parts and consumables for the repair**) (04B, Consumables - Products) and (see **Diesel injection: Precautions for the repair**) (13B, Diesel injection).

II - REFITTING OPERATION FOR PART CONCERNED

❑

> **WARNING**
>
> Do not remove the caps from each component until the last moment.

> Note:
>
> If one or more injectors are replaced, note the alphanumeric code (C2I) and the cylinder on which it is fitted.

❑ Refit the injector with its clamp.

❑ Torque tighten the **diesel injector clamp bolt (28 N.m)**.

III - FINAL OPERATION

❑ Fit the high pressure pipes (see **13B**, **Diesel injection**, **High pressure pipe between rail and injector: Removal - Refitting**, page **13B-22**) .

❑ Torque tighten the **injector rail nuts (28 N.m)**.

❑ Torque tighten in order the **« rail-injector » high pressure pipe nuts (24 N.m)** (see **13B**, **Diesel injection**, **High pressure pipe between rail and injector: Removal - Refitting**, page **13B-22**) .

❑ Refit the neck located on the injector rail.

❑ Secure the engine wiring on the neck.

❑ Connect:

- the accelerometer,
- the high pressure rail pressure sensor,
- the diesel return pipe connecting the injectors to the high pressure pump,
- the diesel supply and return pipes on the high pressure pump,
- the electrical connectors on the high-pressure pump,
- the injectors,
- the heater plugs.

❑ Refit the dipstick guide.

❑ Torque tighten the **nuts of the neck and dipstick guide on the injector rail (21 N.m)**.

❑ Refit:

- the air filter unit (see **12A**, **Fuel mixture**, **Air filter unit: Removal - Refitting**, page **12A-6**) .
- the engine cover,

❑ Connect the battery (see **Battery: Removal - Refitting**) (80A, Battery).

K9K

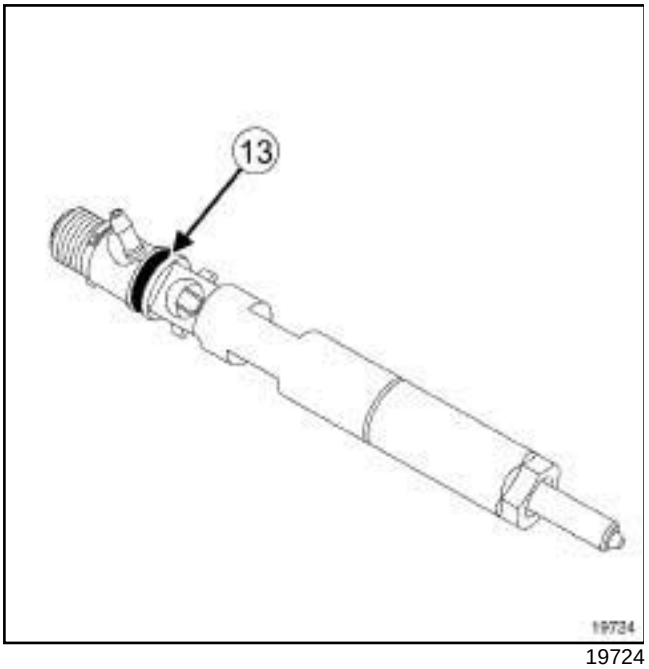

19724

- Program the alphanumeric code (C2I) (**13**) for the replaced injector(s) using the **Diagnostic tool** (see **Fault finding - Replacement of components**) (13B, Diesel injection).
- Start the engine.
- Check that there are no fuel leaks.

K9K

Equipment required
Diagnostic tool

Tightening torques ▽	
accelerometer	**20 N.m**
dipstick guide and filler neck nuts on the high pressure rail	**21 N.m**

IMPORTANT
To avoid all risk of damage to the systems, apply the safety and cleanliness instructions and operation recommendations before carrying out any repair (see **Diesel injection: Precautions for the repair**) .

IMPORTANT

Before carrying out any work on the injection system, check using the **Diagnostic tool** :

- that the injector rail is not under pressure,

- that the fuel temperature is not too high.

It is essential to respect the safety and cleanliness advice whenever work is carried out on this system.

Working on the circuit with the engine running is strictly forbidden.

WARNING
To avoid any corrosion or damage, protect the areas on which fuel is likely to run.

REMOVAL

I - REMOVAL PREPARATION OPERATION

❏ Disconnect the battery (see **Battery: Removal - Refitting**) (80A, Battery).

❏ Remove the front engine cover.

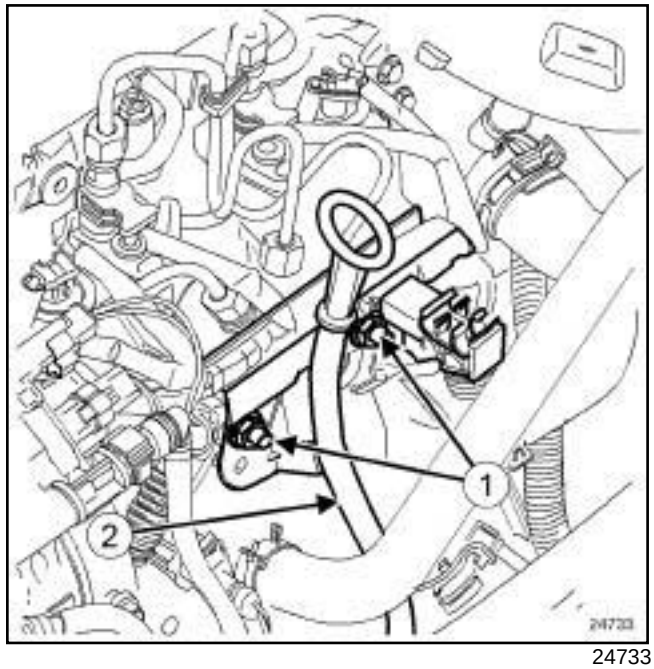

24733

❏ Remove the nuts (**1**) from the dipstick guide and neck.

❏ Put the engine oil dipstick guide to one side (**2**) .

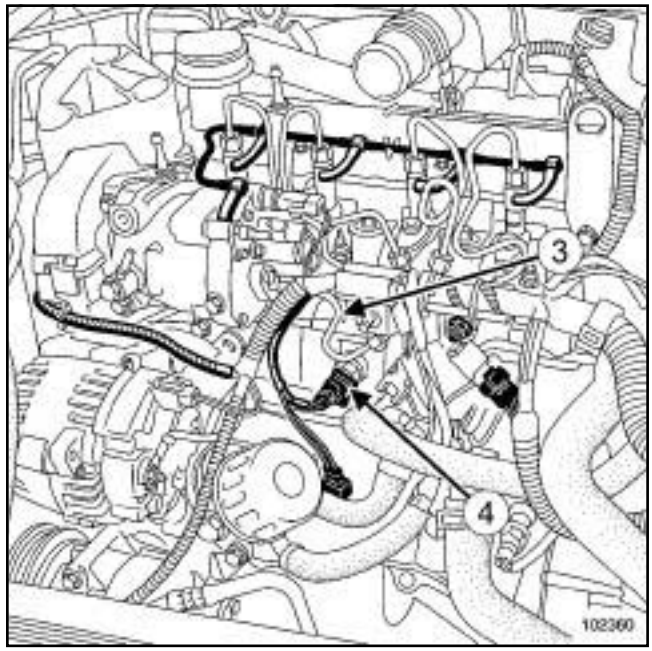

102360

❏ Remove the « pump-rail » high pressure pipe (**3**) (see **13B**, **Diesel injection**, **High pressure pipe between pump and rail: Removal - Refitting**, page **13B-19**) .

❏ Disconnect the accelerometer connector (**4**) .

K9K

II - OPERATION FOR REMOVAL OF PART CONCERNED

❏ Remove the accelerometer using.

REFITTING

I - REFITTING OPERATION FOR PART CONCERNED

❏ Refit the accelerometer.

❏ Torque tighten the **accelerometer (20 N.m)** using the.

II - FINAL OPERATION

❏ Connect the accelerometer connector.

❏ Refit:

- the « pump-rail » high pressure pipe (see **13B**, **Diesel injection**, **High pressure pipe between pump and rail: Removal - Refitting**, page **13B-19**) ,
- the dipstick guide.

❏ Torque tighten the **dipstick guide and filler neck nuts on the high pressure rail (21 N.m)**.

❏ Connect the battery (see **Battery: Removal - Refitting**) (80A, Battery).

❏ Program the accelerometer if replaced (see **Fault finding - Interpretation of faults**) (13B, Diesel injection).

> Note:
>
> When replacing the accelerometer, run command **RZ004** using the **Diagnostic tool** in order to carry out the necessary programming.

❏ Check the high pressure circuit (see **13B**, **Diesel injection**, **High pressure pipe: Check**, page **13B-18**) .

❏ Refit the engine cover.

K9K

Tightening torques ▽	
pre-postheating unit bolt	**8 N.m**

REMOVAL

I - REMOVAL PREPARATION OPERATION

❑ Disconnect the battery (see **Battery: Removal - Refitting**) (80A, Battery).

II - REMOVAL OPERATION

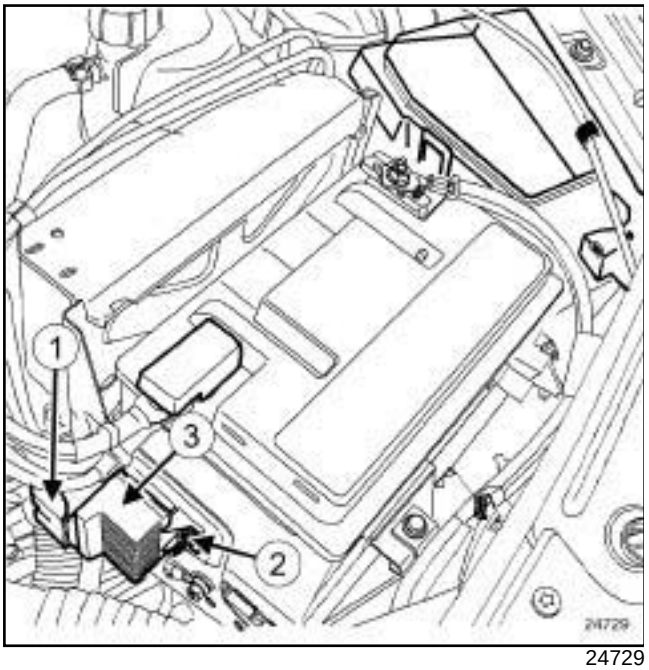

24729

❑ Disconnect the pre-postheating unit connector (**1**) .

❑ Remove:

- the bolt (**2**) from the pre-postheating unit,
- the pre/postheating unit (**3**) .

REFITTING

I - REFITTING OPERATION

❑ Refit the pre-postheating unit.

❑ Tighten to torque the **pre-postheating unit bolt (8 N.m)**.

❑ Connect the pre-postheating unit connector.

II - FINAL OPERATION

❑ Connect the battery (see **Battery: Removal - Refitting**) (80A, Battery).

K9K

Equipment required
compressed air nozzle
hinged wrench for heater plug

Tightening torques ▽	
heater plugs	**15 N.m**

REMOVAL

I - REMOVAL PREPARATION STAGE

❑ Remove the front engine cover.

II - REMOVAL OPERATION

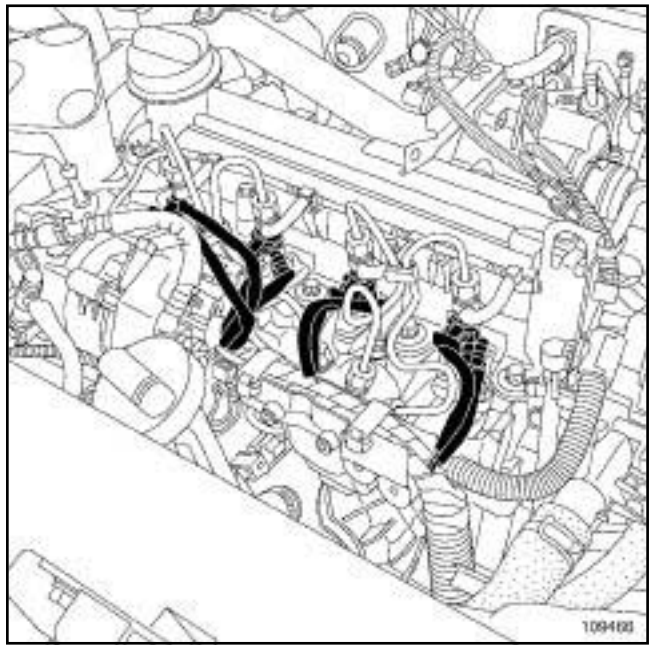

109466

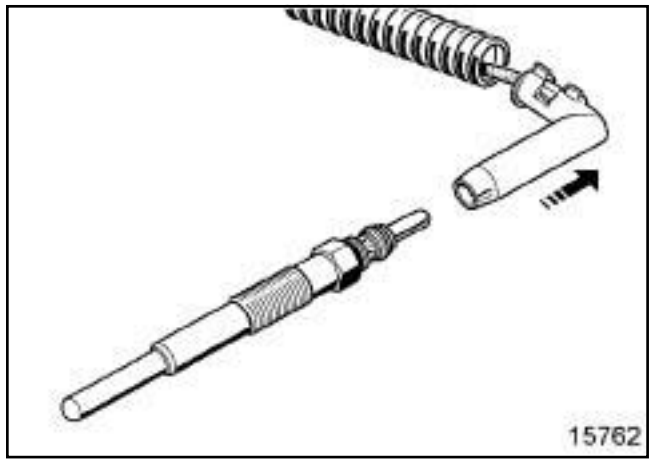

15762

❑ Disconnect the connector from each heater plug.

IMPORTANT
Wear goggles with side protectors for this operation.

❑ Clean around the outside of the heater plugs with a **compressed air nozzle** to prevent any impurities from entering the cylinders.

Note:

If the heater plugs jam, use the heater plug removal tool (see) (Technical Note 5197A, 06A, Tools).

K9K

- Unscrew the heater plugs using a **10 mm** long socket connected to a universal joint or a **hinged wrench for heater plug**.
- Use a hose to unscrew the heater plugs completely.
- Remove the heater plugs.

REFITTING

I - REFITTING OPERATION

- Without tightening, fit the heater plugs using the hose.
- Torque tighten the **heater plugs (15 N.m)**.
- Connect the connector for each heater plug.

II - FINAL OPERATION

- Refit the engine cover.

Exhaust gas recirculation: List and location of components

K9K

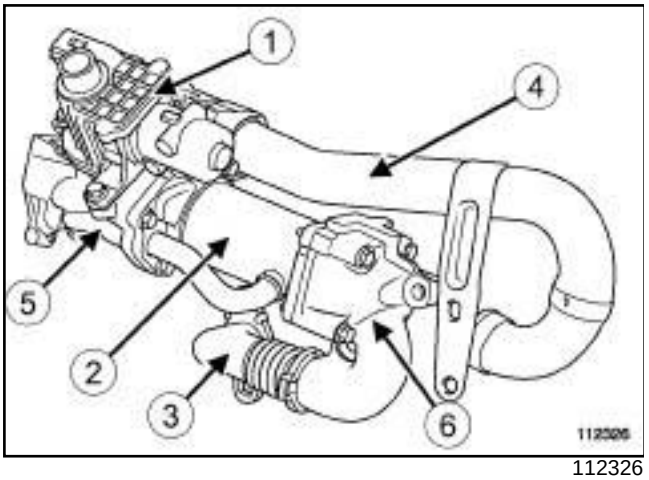

112326

(**1**)	Exhaust gas recirculation solenoid valve
(**2**)	Intercooler
(**3**)	Exhaust gas inlet pipe
(**4**)	Metal air inlet tube
(**5**)	Intercooler bracket on the flywheel end
(**6**)	Intercooler support on the timing end

K4M

IMPORTANT

During this operation, be sure to:

- refrain from smoking or bringing red hot objects close to the working area,
- be careful of fuel splashes when disconnecting the union.

IMPORTANT

Wear leaktight gloves (Nitrile type) for this operation.

IMPORTANT

Wear goggles with side protectors for this operation.

WARNING

To avoid any corrosion or damage, protect the areas on which fuel is likely to run.

WARNING

Keep the pipe unions away from contaminated areas.

WARNING

To prevent impurities from entering the circuit, place protective plugs on all fuel circuit components exposed to the open air.

Note:

The fuel vapour absorber is located behind the front bumper, on the front right-hand side of the vehicle.

REMOVAL

I - REMOVAL PREPARATION OPERATION

❏ Position the vehicle on a lift (see **Vehicle: Towing and lifting**) (02A, Lifting equipment).

❏ Remove the front right-hand wheel (see **Wheel: Removal - Refitting**) (35A, Wheels and tyres).

❏ Move aside the front section of the front right-hand wheel arch liner.

II - REMOVAL OPERATION

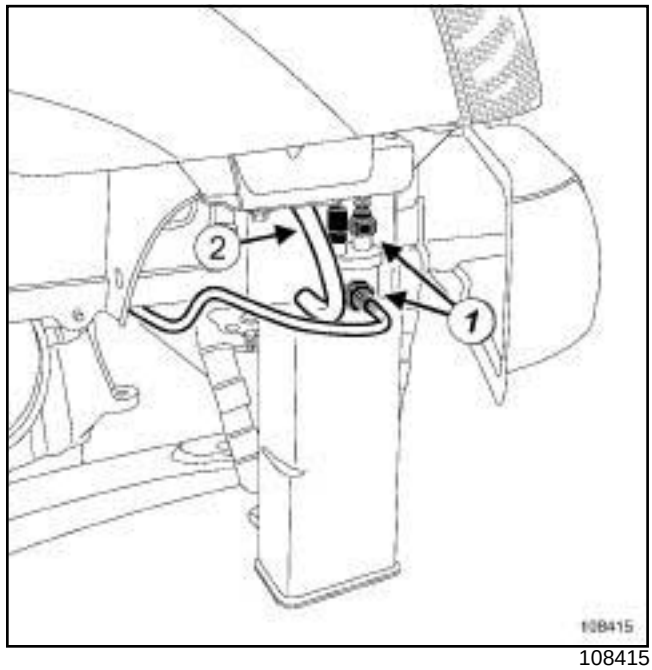

108415

❏ Disconnect:

- the fuel vapour absorber pipes (**1**) ,
- the solenoid valve connector.

❏ Unclip the breather pipe (**2**) .

❏ Insert the blanking plugs.

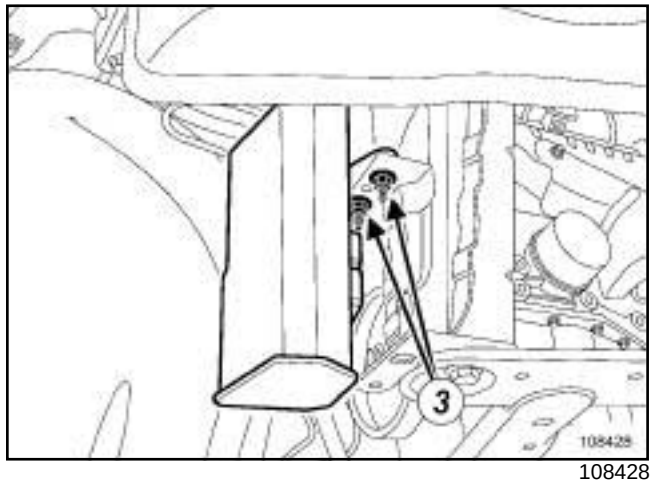

108428

❏ Remove:

- the fuel vapour absorber nuts (**3**) ,
- the fuel vapour absorber.

K4M

REFITTING

I - REFITTING PREPARATION OPERATION

❏ Remove the blanking plugs.

II - REFITTING OPERATION

❏ Refit:

- the fuel vapour absorber,
- the fuel vapour absorber nuts.

❏ Clip on the breather pipe ***(2)***

❏ Connect:

- the solenoid valve connector,
- the fuel vapour absorber pipes ***(1)*** .

III - FINAL OPERATION

❏ Fit the front section of the front right-hand wheel arch liner.

❏ Refit the front right-hand wheel (see **Wheel: Removal - Refitting**) (35A, Wheels and tyres).

K9K, and 796

Tightening torques ▽	
exhaust gas recirculation solenoid valve bolts	**10 N.m**

Note:

The exhaust gas recirculation solenoid valve is fitted into the exhaust gas recirculation unit.

REMOVAL

I - REMOVAL PREPARATION OPERATION

❑ Remove the air filter unit (see **12A**, **Fuel mixture**, **Air filter unit: Removal - Refitting**, page **12A-6**) .

II - REMOVAL OPERATION

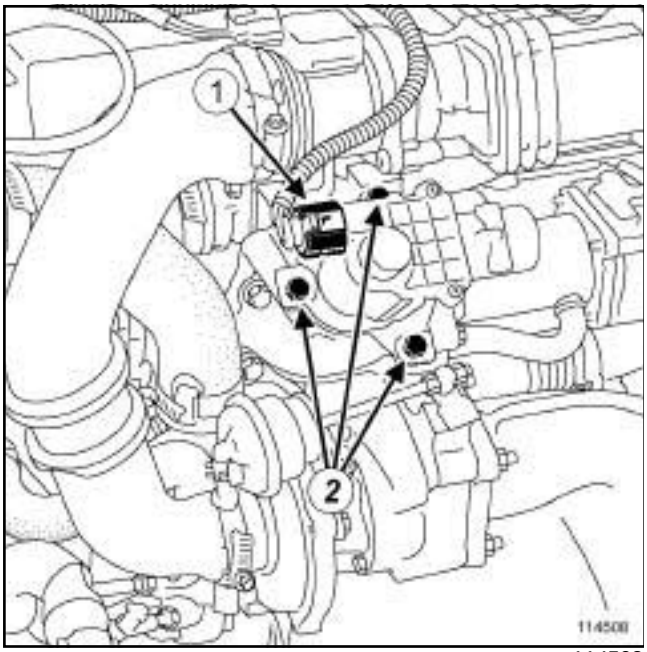

114508

❑ Disconnect the connector (**1**) from the exhaust gas recirculation solenoid valve.

❑ Remove:

- the bolts (**2**) from the exhaust gas recirculation solenoid valve,
- the exhaust gas recirculation solenoid valve,
- the exhaust gas recirculation solenoid valve seal.

K9K, and 796

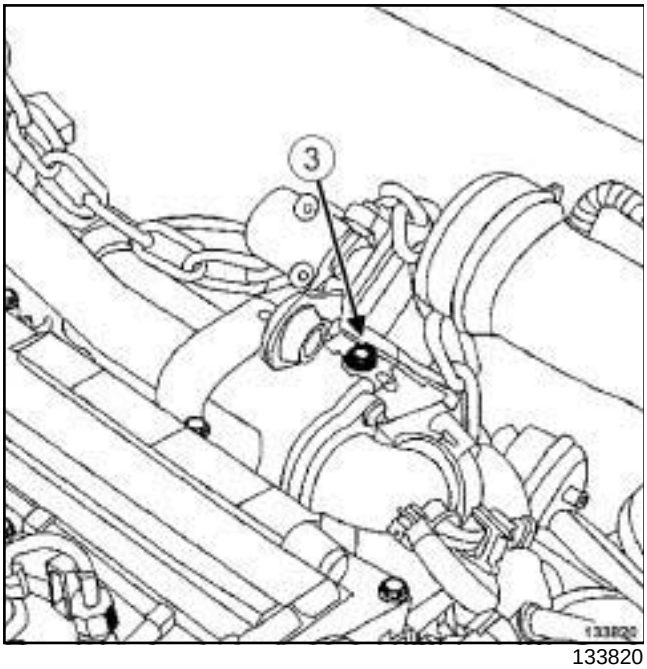

133820

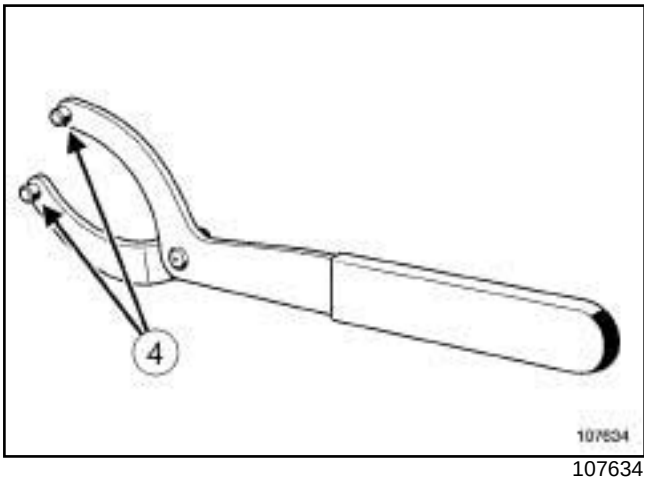

107634

❑

Note:

Use the toolto detach the exhaust gas recirculation solenoid valves jammed in their exhaust gas cooler mountings on the gearbox end.

Remove:

- the bracket bolt (**3**) from the air filter unit,

- the air filter unit bracket.

Position the lugs (**4**) of the toolin the bracket holes of the exhaust gas recirculation solenoid valve.

Unlock the exhaust gas recirculation solenoid valve by turning it on its axis using the.

Refit:

- the air filter unit bracket,

- the bolt on the air filter unit bracket.

REFITTING

I - REFITTING PREPARATION OPERATION

❑ **parts always to be replaced: exhaust gas recirculation solenoid valve seal**.

❑ Use **GREY ABRASIVE PADS** (see **Vehicle: Parts and consumables for the repair**) (04B, Consumables - Products) to clean:

- the joint face of the exhaust gas recirculation solenoid valve if it is being reused,

- the joint face of the exhaust gas cooler mounting on the gearbox end.

❑ Use **SURFACE CLEANER** (see **Vehicle: Parts and consumables for the repair**) (04B, Consumables - Products) to clean and degrease:

- the joint face of the exhaust gas recirculation solenoid valve if it is being reused,

- the joint face of the exhaust gas cooler mounting on the gearbox end.

WARNING

To ensure proper sealing, the gasket surfaces must be clean, dry and not greasy (avoid any finger marks).

II - REFITTING OPERATION

❑ Position the exhaust gas recirculation solenoid valve with a new seal.

K9K, and 796

- Torque tighten the **exhaust gas recirculation solenoid valve bolts (10 N.m)**.
- Connect the exhaust gas recirculation solenoid valve connector.

III - FINAL OPERATION

- Refit the air filter unit (see **12A**, **Fuel mixture**, **Air filter unit: Removal - Refitting**, page **12A-6**) .

K9K, and 796

Tightening torques ▽	
exhaust gas cooler bolts	**12 N.m**
exhaust gas recirculation rigid pipe bolts	**12 N.m**

IMPORTANT
Wear leaktight gloves (Nitrile type) for this operation.

REMOVAL

I - REMOVAL PREPARATION OPERATION

❑ Position the vehicle on a two-post lift (see **Vehicle: Towing and lifting**) (02A, Lifting equipment).

❑ Disconnect the battery (see **Battery: Removal - Refitting**) (80A, Battery).

❑ Remove:

- the engine cover,
- the engine undertray bolts,
- the engine undertray.
- the catalytic converter (see **19B**, **Exhaust**, **Catalytic converter: Removal - Refitting**, page **19B-10**) ,
- the exhaust gas recirculation rigid pipe (see **14A**, **Antipollution**, **Exhaust gas recirculation rigid pipe: Removal - Refitting**, page **14A-12**) ,
- the exhaust gas recirculation assembly (see **14A**, **Antipollution**, **Exhaust gas recirculation assembly: Removal - Refitting**, page **14A-9**) .

II - REMOVAL OPERATION

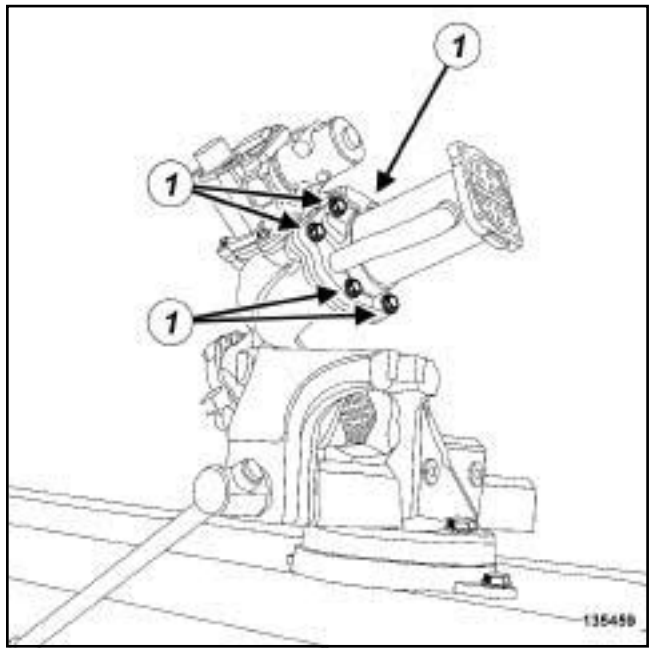

135459

❑ Remove the following on the workbench:

- the exhaust gas cooler bolts (**1**) from the exhaust gas cooler mounting at the gearbox end,
- the exhaust gas cooler from the exhaust gas cooler mounting at the gearbox end,
- the exhaust gas cooler seal at the gearbox end.

REFITTING

I - REMOVAL PREPARATION OPERATION

❑ **parts always to be replaced: exhaust gas cooler seal**

Note:
Take care not to damage the joint faces of the exhaust gas cooler to prevent any coolant leaks.

WARNING
Do not scrape the joint faces of the aluminium, any damage caused to the joint face will result in a risk of leaks.

❑ Use **GREY ABRASIVE PADS** (see **Vehicle: Parts and consumables for the repair**) (04B, Consumables - Products) to clean:

- the joint faces of the exhaust gas cooler if it is to be reused,

K9K, and 796

- the joint face of the exhaust gas cooler mounting on the gearbox end,
- the joint face of the exhaust gas cooler mounting on the timing end.

❑ Use **SURFACE CLEANER** (see **Vehicle: Parts and consumables for the repair**) (04B, Consumables - Products) to clean and degrease:

- the joint faces of the exhaust gas cooler if it is to be reused,
- the joint face of the exhaust gas cooler mounting on the gearbox end,
- the joint face of the exhaust gas cooler mounting on the timing end.

II - REFITTING OPERATION

❑ On the workbench, refit:

- the exhaust gas cooler fitted with a new seal on the exhaust gas cooler mounting at the gearbox end,
- fit without tightening the exhaust gas cooler bolts on the exhaust gas cooler mounting at the gearbox end,
- a new exhaust gas recirculation rigid pipe on the exhaust gas recirculation assembly,
- fit without tightening the bolts of the exhaust gas recirculation rigid pipe on the exhaust gas recirculation assembly.

Note:

The exhaust gas cooler must be able to move in relation to the exhaust gas cooler mounting and the exhaust gas recirculation rigid pipe so that it can be adjusted correctly.

❑ Fit the exhaust gas recirculation assembly equipped with the exhaust gas recirculation rigid pipe on the cylinder head.

❑ Tighten:

- the bolts of the exhaust gas recirculation assembly on the cylinder head,
- the bolts of the exhaust gas recirculation rigid pipe bracket on the cylinder head,
- the bolts of the exhaust gas cooler on the exhaust gas recirculation mounting,
- the bolts of the exhaust gas recirculation rigid pipe on the exhaust gas recirculation assembly,

❑ Remove:

- the exhaust gas recirculation assembly bolts,
- the bolts of the exhaust gas recirculation rigid pipe bracket,
- the exhaust gas recirculation assembly fitted with the exhaust gas recirculation rigid pipe.

❑ On the workbench, torque tighten:

- the **exhaust gas cooler bolts (12 N.m)**,
- the **exhaust gas recirculation rigid pipe bolts (12 N.m)**.

III - FINAL OPERATION

❑ Proceed in the reverse order to removal.

❑ Bleed the cooling system (see **19A**, **Cooling**, **Cooling system: Draining - Refilling**, page **19A-6**) .

Exhaust gas recirculation assembly: Removal - Refitting

K9K, and 796

Special tooling required	
Ms. 583	Pipe clamps.

Tightening torques ▽	
bolts of the exhaust gas recirculation assembly	**21 N.m**
bolts on the « timing end lifting eye - air inlet metal tube assembly »	**10 N.m**

IMPORTANT
Wear cut-resistant gloves during the operation.

I - REMOVAL PREPARATION OPERATION

❑ Position the vehicle on a two-post lift (see **Vehicle: Towing and lifting**) (02A, Lifting equipment).

❑ Disconnect the battery (see **Battery: Removal - Refitting**) (80A, Battery).

❑ Remove:

- the engine cover,
- the air filter box (see **12A**, **Fuel mixture**, **Air filter unit: Removal - Refitting**, page **12A-6**) ,
- the engine undertray,
- the catalytic converter (see **19B**, **Exhaust**, **Catalytic converter: Removal - Refitting**, page **19B-10**) .

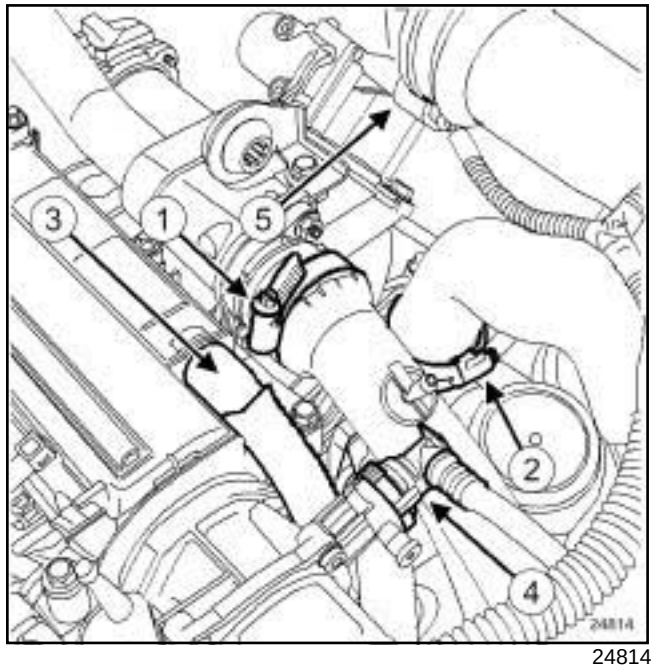

24814

❑ Remove:

- the clip (**1**) on the air pipe between the intercooler and the exhaust gas recirculation assembly,
- the clip (**2**) on the air pipe between the intercooler and the turbocharger.

❑ Disconnect:

- the air pipe between the intercooler and the exhaust gas recirculation assembly,
- the air pipe between the intercooler and the turbocharger,
- the oil vapour rebreathing pipe (**3**) ,
- the non-return valve (**4**) at the vacuum pump,
- the exhaust gas recirculation solenoid valve connector (**5**) .

K9K, and 796

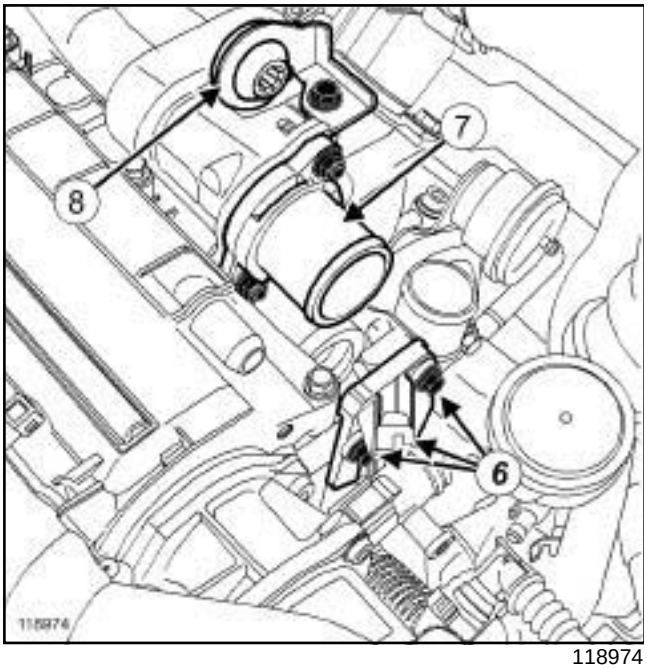

118974

❑ Position the **(Ms. 583)** or the hose clamps on the coolant inlet and outlet hoses of the exhaust gas cooler.

> **WARNING**
> Prepare for the flow of fluid, and protect the surrounding components.

❑ Remove:

- the bolts (**6**) on the coolant circulation cover,
- the coolant circulation cover,
- the seals of the coolant circulation cover.

II - REMOVAL OPERATION

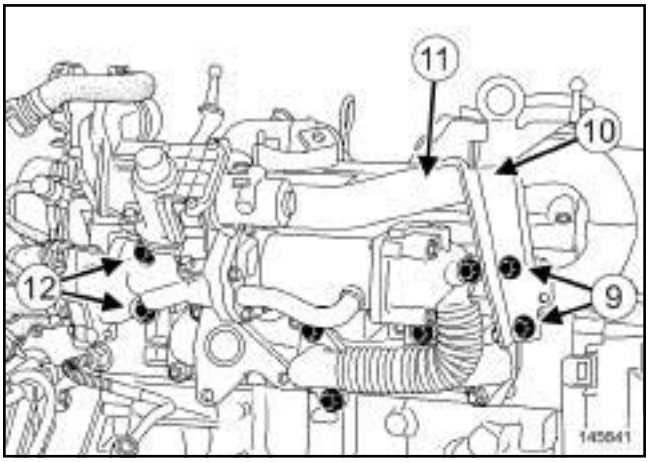

145641

❑ Remove:

- the bolts (**9**) from the lifting eye at the timing end,
- the lifting eye on the timing end (**10**) ,
- the air inlet metal tube (**11**) ,
- the air inlet metal tube seals,
- the exhaust gas recirculation rigid pipe (see **14A**, **Antipollution**, **Exhaust gas recirculation rigid pipe: Removal - Refitting**, page **14A-12**) ,
- the bolts (**12**) of the exhaust gas assembly mounting,
- the exhaust gas recirculation assembly.

❑ Remove the following on the workbench:

- the air duct sleeve ***(7)*** ,
- the centring ring ***(8)*** of the air filter unit.

REFITTING

I - REFITTING PREPARATION OPERATION

❑ On the workbench, refit:

- the air pipe sleeve ***(7)*** ,
- the centring ring of the air filter unit.

❑ Always replace:

- the air inlet metal tube seals,
- the coolant circulation cover seals,
- the turbocharger air outlet pipe seal.

K9K, and 796

- Use **GREY ABRASIVE PADS** (see **Vehicle: Parts and consumables for the repair**) (04B, Consumables - Products) to clean the joint faces of the exhaust gas cooler mounting at the gearbox end.

> **WARNING**
> Do not scrape the joint faces of the aluminium, any damage caused to the joint face will result in a risk of leaks.

- Use **SURFACE CLEANER** (see **Vehicle: Parts and consumables for the repair**) (04B, Consumables - Products) to clean and degrease:
  - the housing of the coolant circulation cover seals,
  - the exhaust gas cooler mounting joint faces on the gearbox end,
  - the housing of each air inlet metal tube seal,
  - the housing of the turbocharger air outlet pipe seal,
  - the housing of the air inlet metal tube in the cylinder head,
  - the housing of the air inlet metal tube in the exhaust gas cooler mounting on the gearbox end.

> **WARNING**
> To ensure proper sealing, the gasket surfaces must be clean, dry and not greasy (avoid any finger marks).

II - REFITTING OPERATION

- Proceed in the reverse order to removal.
- Torque tighten:
  - the **bolts of the exhaust gas recirculation assembly (21 N.m)**,
  - the **bolts on the « timing end lifting eye - air inlet metal tube assembly » (10 N.m)**.
- Fill and bleed the cooling system (see **19A**, **Cooling**, **Cooling system: Draining - Refilling**, page **19A-6**) .

K9K, and 796

Tightening torques ▽	
bolts of the exhaust gas recirculation rigid pipe bracket on the cylinder head	**21 N.m**
bolts of the exhaust gas recirculation rigid pipe on the exhaust manifold	**36 N.m**
bolts of the exhaust gas recirculation rigid pipe on the exhaust gas recirculation assembly	**12 N.m**
lifting eye bolts	**10 N.m**

REMOVAL

I - REMOVAL PREPARATION OPERATION

❑ Position the vehicle on a two-post lift (see **Vehicle: Towing and lifting**) (02A, Lifting equipment).

❑ Disconnect the battery (see **Battery: Removal - Refitting**) (80A, Battery).

❑ Remove:

- the engine cover,
- the air filter unit (see **12A**, **Fuel mixture**, **Air filter unit: Removal - Refitting**, page **12A-6**) ,
- the engine undertray.

❑ Remove the catalytic converter (see **19B**, **Exhaust**, **Catalytic converter: Removal - Refitting**, page **19B-10**) .

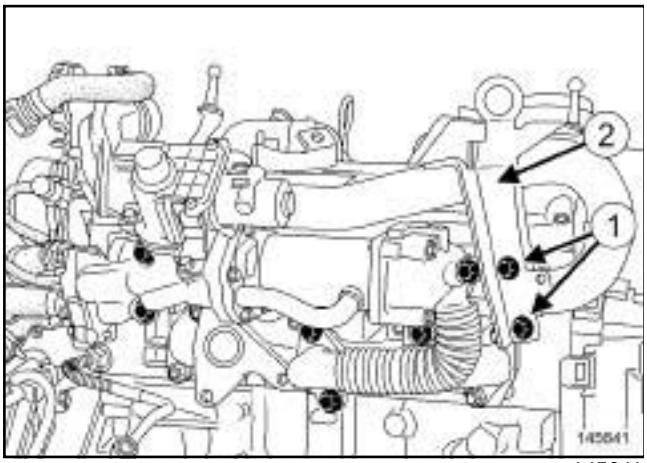

145641

❑ Remove:

- the bolts (**1**) from the lifting eye at the timing end,
- the timing end lifting eye (**2**) ,

II - REMOVAL OPERATION

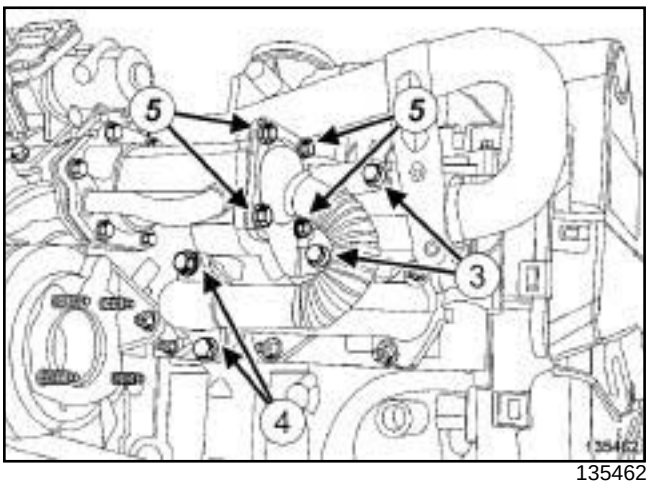

135462

❑ Remove:

- the bolts (**3**) of the exhaust gas recirculation rigid pipe bracket from the cylinder head,
- the bolts (**4**) of the exhaust gas recirculation rigid pipe from the exhaust manifold,
- the bolts (**5**) of the exhaust gas recirculation rigid pipe from the exhaust gas recirculation rigid pipe,
- the exhaust gas recirculation rigid pipe,
- the seal between the exhaust gas rigid pipe and the exhaust gas manifold,
- the seal between the exhaust gas recirculation rigid pipe and the exhaust gas cooler.

REFITTING

I - REFITTING PREPARATION OPERATION

❑

WARNING
Do not scrape the joint faces of the aluminium, any damage caused to the joint face will result in a risk of leaks.

K9K, and 796

- Clean using **ABRASIVE PADS** :
  - the joint face of the exhaust gas recirculation assembly,
  - the exhaust manifold seal face.

> **WARNING**
> To ensure proper sealing, the gasket surfaces must be clean, dry and not greasy (avoid any finger marks).

- Use **SURFACE CLEANER** (see) (04B, Consumables - Products) and **CLEAN CLOTHS** to degrease:
  - the exhaust manifold joint face,
  - the joint face of the exhaust gas recirculation assembly.
- **parts always to be replaced: Exhaust gas recirculation rigid pipe**.
- **parts always to be replaced: Exhaust gas recirculation pipe seal**.
- **parts always to be replaced: exhaust gas recirculation pipe bolt**

II - REFITTING OPERATION

- Proceed in the reverse order to removal.
- Torque tighten:
  - the **bolts of the exhaust gas recirculation rigid pipe bracket on the cylinder head (21 N.m)**,
  - the **bolts of the exhaust gas recirculation rigid pipe on the exhaust manifold (36 N.m)**,
  - the **bolts of the exhaust gas recirculation rigid pipe on the exhaust gas recirculation assembly (12 N.m)**,
  - the **lifting eye bolts (10 N.m)**.

K9K

Tightening torques ▽	
alternator bolts	**21 N.m**
alternator lead nut	**14 N.m**

REMOVAL

I - REMOVAL PREPARATION OPERATION

❑ Disconnect the battery (see **Battery: Removal - Refitting**) (80A, Battery).

❑ Remove the accessories belt (see **11A**, **Top and front of engine**, **Accessories belt: Removal - Refitting**, page **11A-2**) .

II - REMOVAL OPERATION

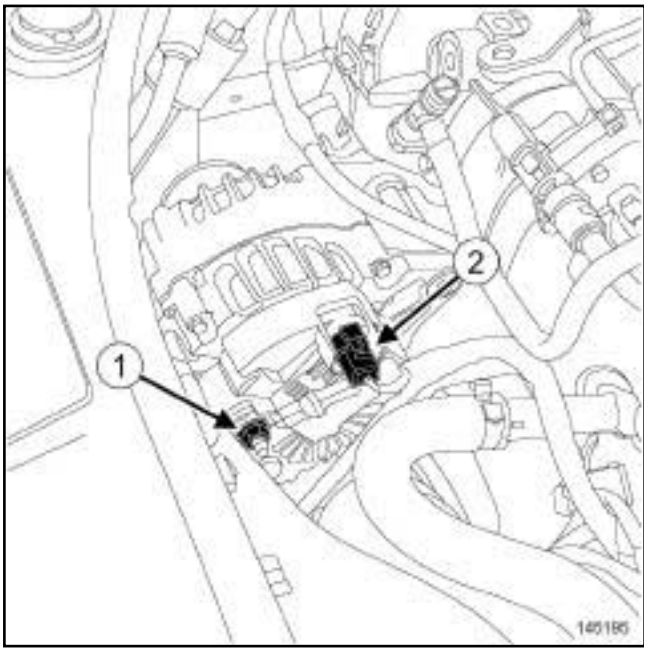

145195

❑ Remove:

- the alternator lead nut (**1**) ,
- the lead from the alternator.

❑ Disconnect the connector (**2**) .

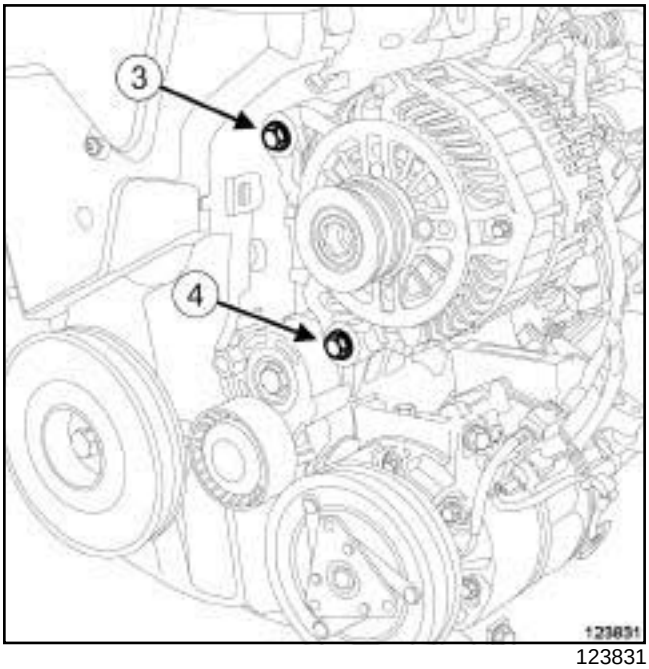

123831

❑ Remove the alternator upper bolt (**3**) .

❑ Loosen the alternator lower bolt (**4**) .

❑ Remove the alternator with its lower bolt.

REFITTING

I - REFITTING PREPARATION OPERATION

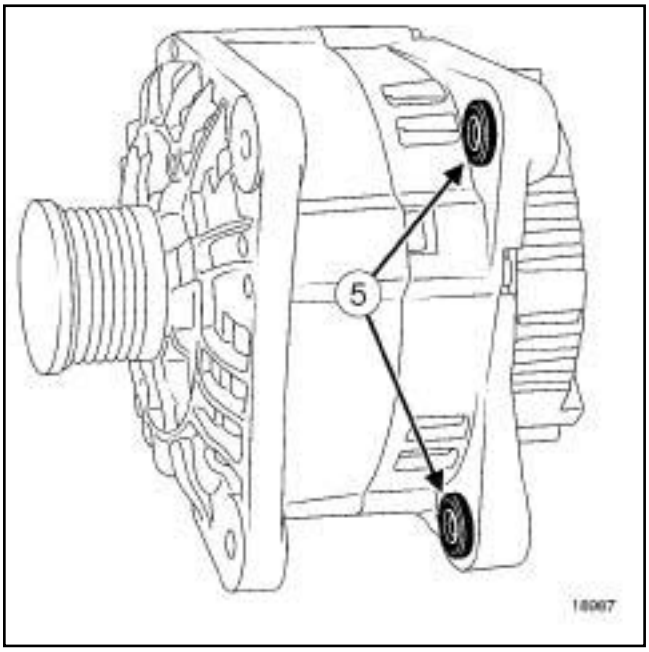

18987

❑ Push in the alternator rings (**5**) to facilitate fitting.

K9K

II - REFITTING OPERATION

❏ Refit:

- the alternator with its lower bolt,
- the alternator upper bolt.

❏ Torque tighten the **alternator bolts (21 N.m)**.

❏ Connect the connector to the alternator.

❏ Refit the alternator lead.

❏ Torque tighten the **alternator lead nut (14 N.m)**.

III - FINAL OPERATION

❏ Refit the accessories belt (see **11A**, **Top and front of engine**, **Accessories belt: Removal - Refitting**, page **11A-2**) .

❏ Connect the battery (see **Battery: Removal - Refitting**) (80A, Battery).

K4M, and POWER ASSISTED STEERING, and AIR CONDITIONING

Tightening torques ▽	
alternator bolts	**21 N.m**
alternator lead nut	**14 N.m**

REMOVAL

I - REMOVAL PREPARATION OPERATION

❑ Position the vehicle on a two-post lift (see **Vehicle: Towing and lifting**) (02A, Lifting equipment).

❑ Disconnect the battery (see **Battery: Removal - Refitting**) (80A, Battery).

❑ Remove:

- the front bumper (see **Front bumper: Removal - Refitting**) (55A, Exterior protection),
- the accessories belt (see **11A**, **Top and front of engine**, **Accessories belt: Removal - Refitting**, page **11A-2**) .

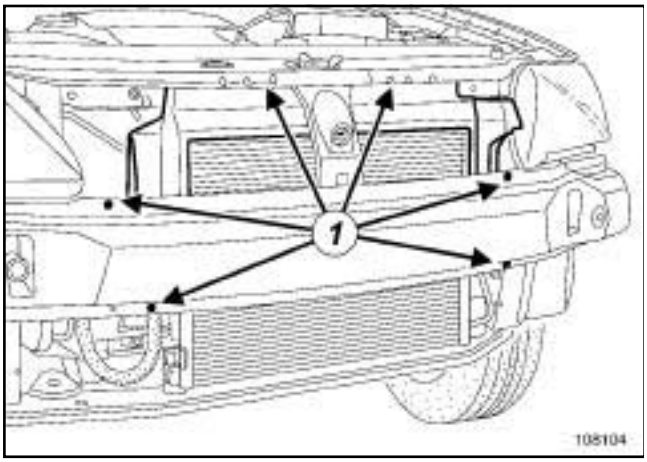

108104

❑ Remove:

- the air deflector mounting pins (**1**) ,
- the air deflector.

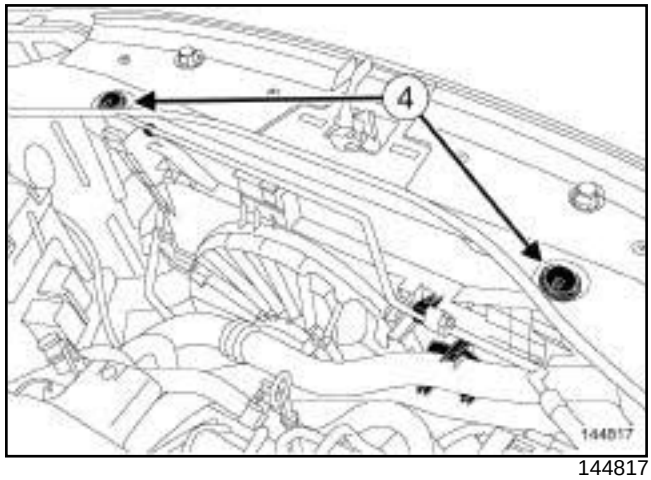

144817

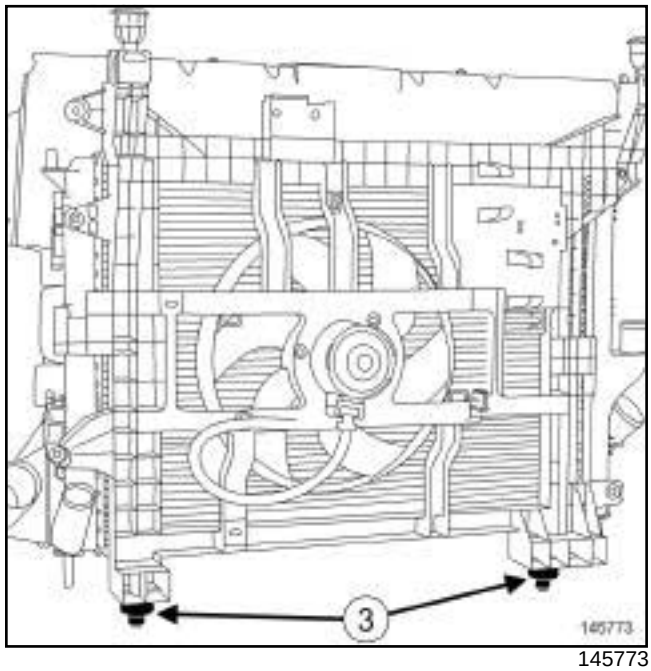

145773

❑ Remove the upper mountings (**4**) from the engine cooling fan assembly (see **19A**, **Cooling**, **Engine cooling fan assembly: Removal - Refitting**, page **19A-27**) .

❑ Extract the « engine cooling fan - cooling radiator - condenser » assembly from its lower mountings ***(3)*** and slide it to the left.

K4M, and POWER ASSISTED STEERING, and AIR CONDITIONING

II - REMOVAL OPERATION

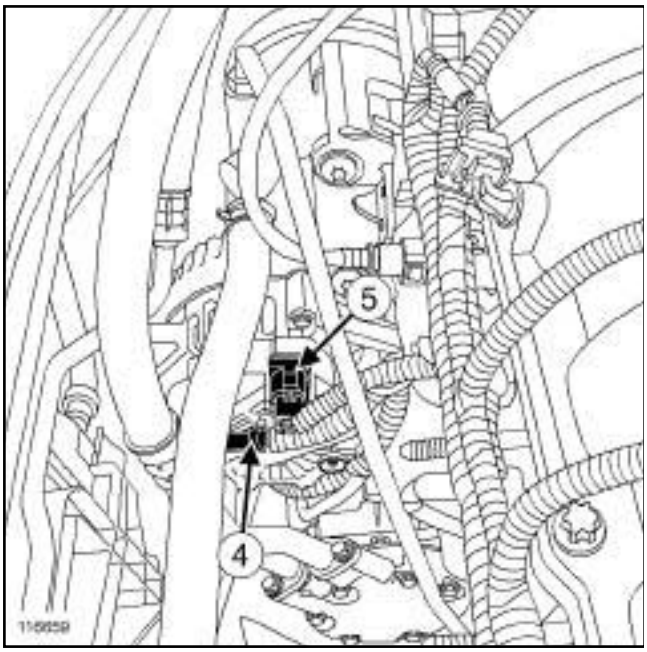

116659

- ❑ Remove:
  - the alternator lead nut,
  - the alternator lead (**4**) .
- ❑ Disconnect the alternator connector (**5**) .

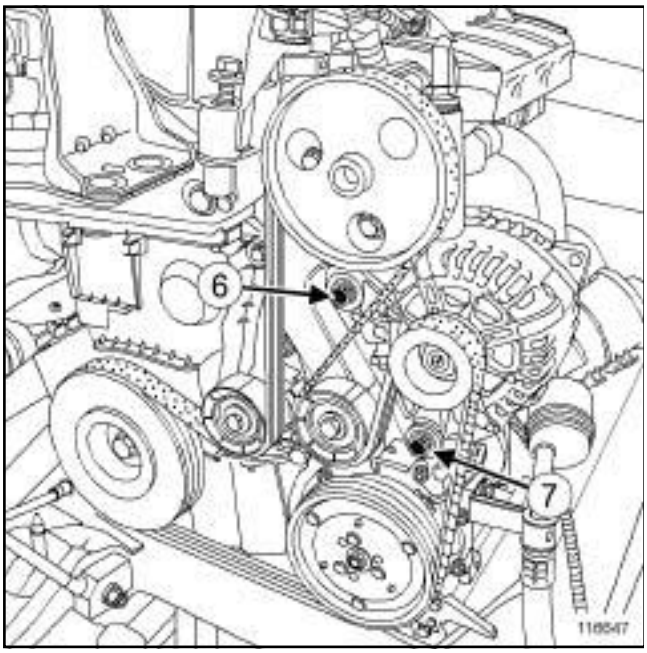

116647

- ❑ Remove the alternator upper bolt (**6**) .
- ❑ Loosen the alternator lower bolt ***(7)*** .
- ❑ Move the alternator away from the multifunction support using a screwdriver.
- ❑ Remove the alternator and its lower mounting bolt.

REFITTING

I - REFITTING PREPARATION OPERATION

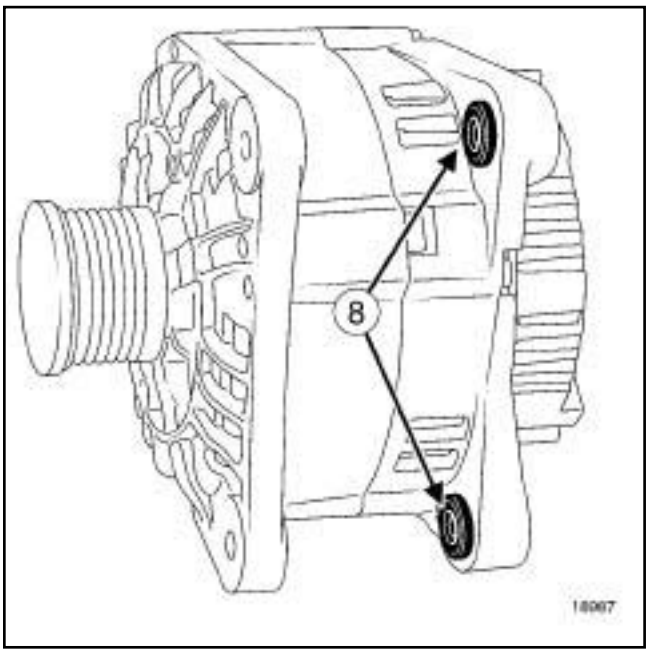

18987

- ❑ Push the rings (**8**) to make fitting easier.

II - REFITTING OPERATION

- ❑ Refit the alternator.
- ❑ Torque tighten the **alternator bolts (21 N.m)**.
- ❑ Connect the connector to the alternator.
- ❑ Refit:
  - the lead to the alternator,
  - the alternator lead nut.
- ❑ Torque tighten the **alternator lead nut (14 N.m)**.

III - FINAL OPERATION

- ❑ Slide the « engine cooling fan - cooling radiator - condenser » assembly to the right and fit it in its lower mountings.
- ❑ Refit the upper mountings of the engine cooling fan assembly (see **19A**, **Cooling**, **Engine cooling fan assembly: Removal - Refitting**, page **19A-27**) .
- ❑ Refit:
  - the air deflector,
  - the accessories belt (see **11A**, **Top and front of engine**, **Accessories belt: Removal - Refitting**, page **11A-2**) ,

K4M, and POWER ASSISTED STEERING, and AIR CONDITIONING

- the front bumper (see **Front bumper: Removal - Refitting**) (55A, Exterior protection).

❏ Connect the battery (see **Battery: Removal - Refitting**) (80A, Battery).

K4M, and STANDARD HEATING RECIRCULATION

Tightening torques ▽	
alternator bolts	**21 N.m**
positive terminal nut on the alternator	**14 N.m**

REMOVAL

I - REMOVAL PREPARATION OPERATION

❏ Position the vehicle on a two-post lift (see **Vehicle: Towing and lifting**) (02A, Lifting equipment).

❏ Disconnect the battery (see **Battery: Removal - Refitting**) (80A, Battery).

❏ Remove:

- the front right-hand wheel (see **Wheel: Removal - Refitting**) (35A, Wheels and tyres),
- the accessories belt (see **11A**, **Top and front of engine**, **Accessories belt: Removal - Refitting**, page **11A-2**) .

❏

IMPORTANT

During this operation, be sure to:

- refrain from smoking or bringing red hot objects close to the working area,
- be careful of fuel splashes when disconnecting the union.

WARNING

To avoid any corrosion or damage, protect the areas on which fuel is likely to run.

❏ Disconnect the fuel supply pipe union ***(3)*** on the injector rail.

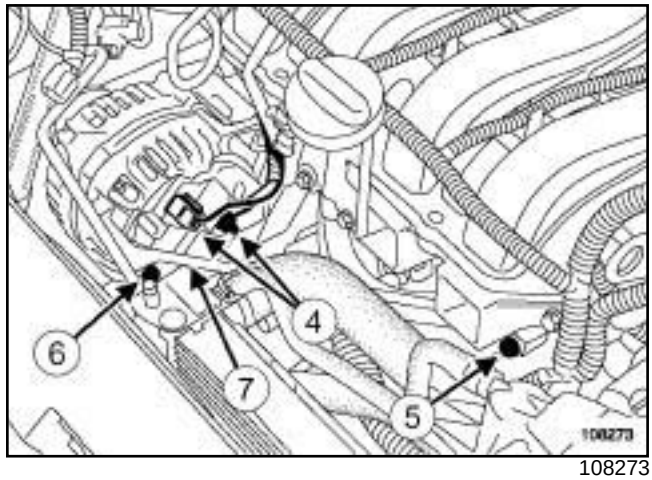

108273

❏ Disconnect the alternator's electrical connections (**4**) .

❏ Move aside the alternator wiring.

II - REMOVAL OPERATION

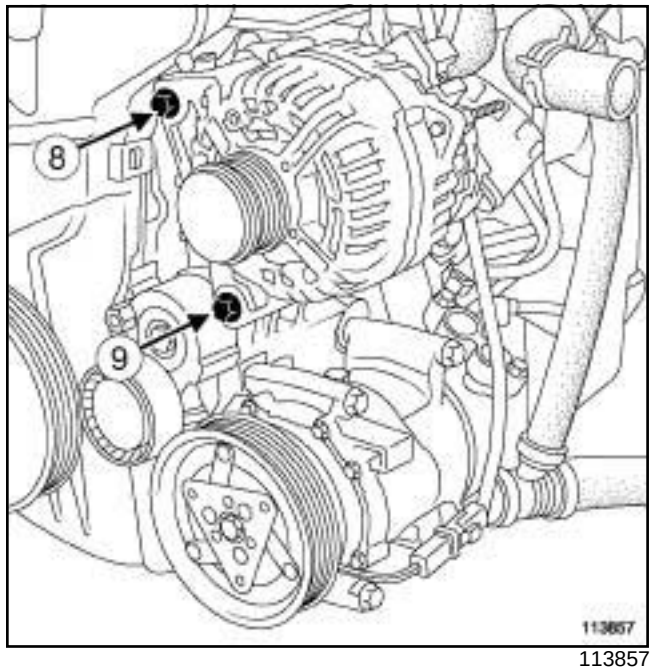

113857

❏ Remove the alternator upper bolt (**8**) .

❏ Loosen the alternator lower bolt (**9**) .

❏ Move the alternator away from the multifunction support using a screwdriver.

❏ Remove the alternator with its lower bolt upwards.

K4M, and STANDARD HEATING RECIRCULATION

REFITTING

I - REFITTING PREPARATION OPERATION

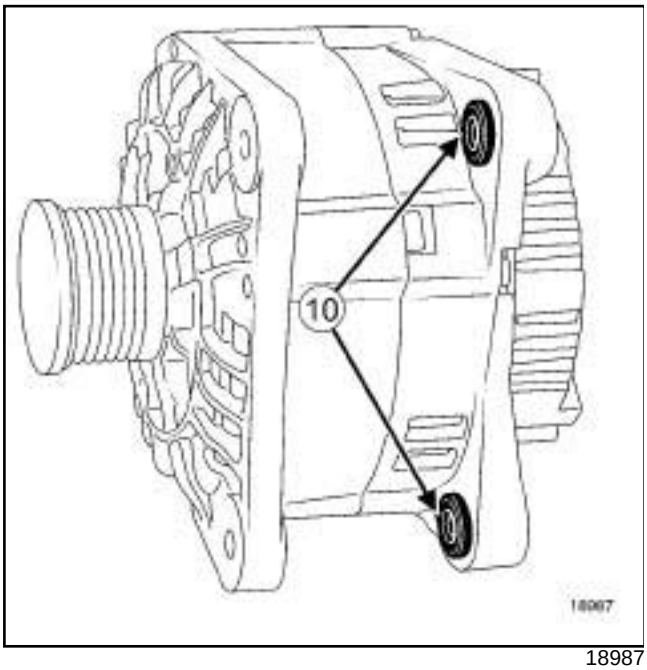

18987

❑ Push the rings (**10**) to make fitting easier.

II - REFITTING OPERATION

❑ Refit the alternator.

❑ Torque tighten the **alternator bolts (21 N.m)**.

III - FINAL OPERATION

❑ Connect the alternator electrical connections.

❑ Torque tighten the **positive terminal nut on the alternator (14 N.m)**.

❑ Connect the fuel supply pipe union on the injector rail.

❑ Refit:

- the accessories belt (see **11A**, **Top and front of engine**, **Accessories belt: Removal - Refitting**, page **11A-2**) ,
- the front right-hand wheel (see **Wheel: Removal - Refitting**) (35A, Wheels and tyres).

❑ Connect the battery (see **Battery: Removal - Refitting**) (80A, Battery).

K9K

Tightening torques ▽	
starter bolts	**44 N.m**
nut on the starter solenoid lead	**5 N.m**
starter lead nut	**8 N.m**

REMOVAL

I - REMOVAL PREPARATION OPERATION

❑ Disconnect the battery (see **Battery: Removal - Refitting**) (80A, Battery).

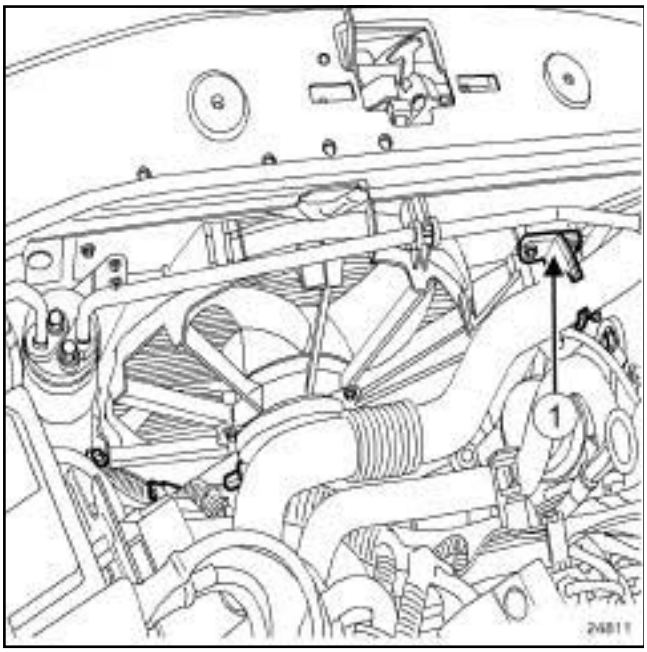

24811

❑ Unclip the intercooler duct on the fan assembly at (**1**) .

❑ Move aside the intercooler duct.

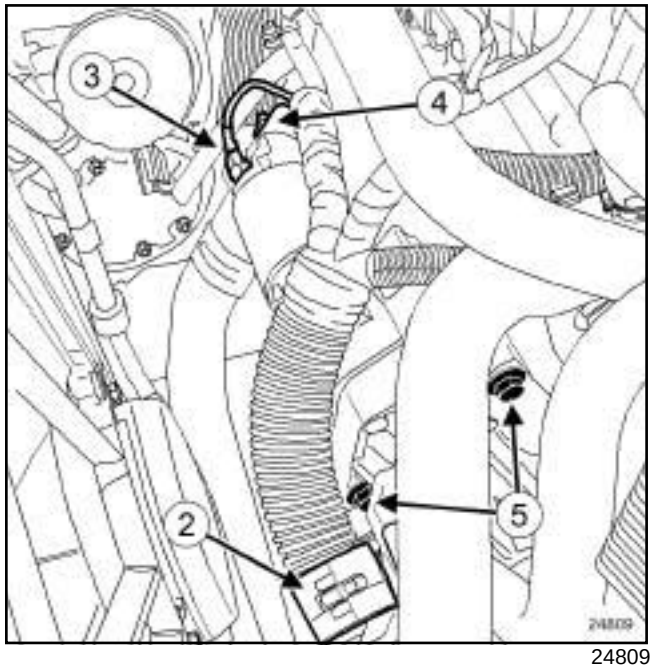

24809

❑ Unclip the engine wiring at (**2**) .

II - REMOVAL OPERATION

❑ Remove:

- the nut ***(3)*** on the starter solenoid lead,
- the nut ***(4)*** on the starter lead,
- the starter leads,
- the starter bolts ***(5)*** ,
- the starter.

REFITTING

I - REFITTING PREPARATION OPERATION

❑ Check that the starter centring dowel is in place.

II - REFITTING OPERATION

❑ Refit the starter.

❑ Torque tighten the **starter bolts (44 N.m)**.

❑ Refit the starter leads.

❑ Torque tighten:

- the **nut on the starter solenoid lead (5 N.m)**,
- the **starter lead nut (8 N.m)**.

K9K

III - FINAL OPERATION

❏ Clip:

- the engine wiring,
- the intercooler duct on the fan assembly.

❏ Connect the battery (see **Battery: Removal - Refitting**) (80A, Battery).

K4M

Tightening torques ▽	
starter bolts	**44 N.m**
starter lead nut	**8 N.m**
nut on the starter solenoid lead	**5 N.m**

REMOVAL

I - REMOVAL PREPARATION OPERATION

❏ Position the vehicle on a two-post lift (see **Vehicle: Towing and lifting**) (02A, Lifting equipment).

❏ Disconnect the battery (see **Battery: Removal - Refitting**) (80A, Battery).

❏ Remove the air resonator (see **12A**, **Fuel mixture**, **Air resonator: Removal - Refitting**, page **12A-2**) .

JR5

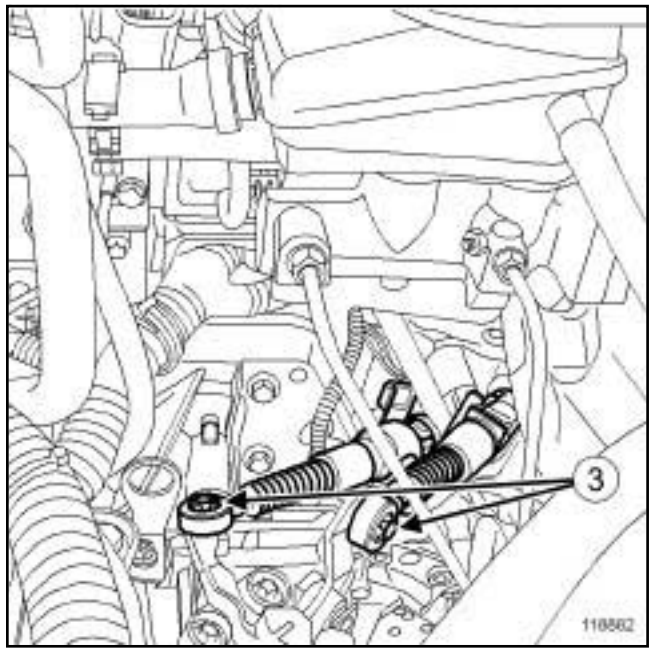

118882

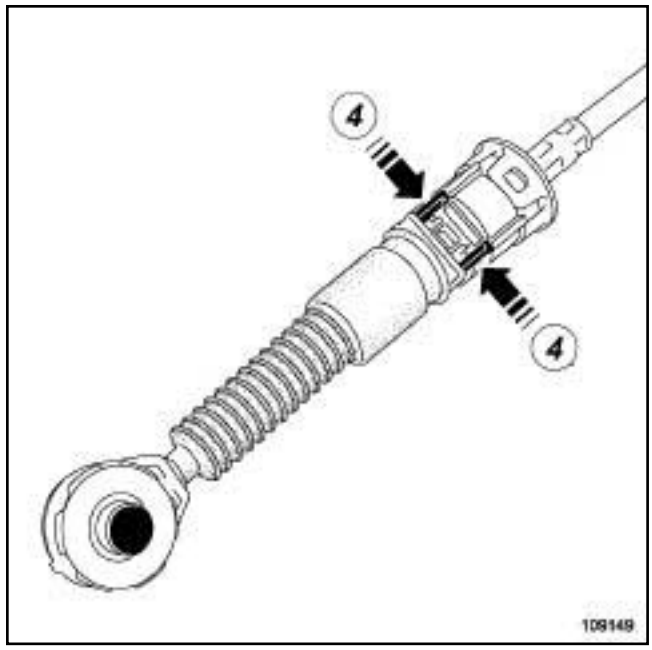

109149

❏ Unclip:

- the gear control cables on the gearbox at (**3**) using a screwdriver,

- the gearbox control cable sleeve stops by pressing at (**4**) .

K4M

II - REMOVAL OPERATION

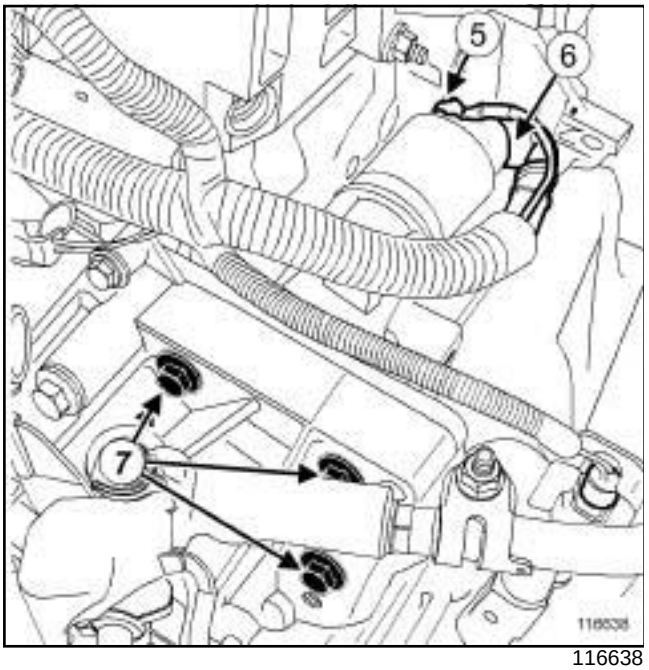

116638

❑ Remove:

- the nut (**5**) on the starter solenoid lead,
- the nut (**6**) on the starter lead,
- the starter bolts (**7**) ,
- the starter from underneath the vehicle.

REFITTING

I - REFITTING PREPARATION OPERATION

❑ Check that the centring dowel is in place.

II - REFITTING OPERATION

❑ Refit:

- the starter from underneath the vehicle,
- the starter bolts.

❑ Torque tighten the **starter bolts (44 N.m)**.

❑ Refit:

- the starter leads,
- the starter lead nut,
- the nut on the starter solenoid lead.

❑ Torque tighten:

- the **starter lead nut (8 N.m)**,
- the **nut on the starter solenoid lead (5 N.m)**.

III - FINAL OPERATION

JR5

❑ Clip:

- the gearbox control cable sleeve stops on the gearbox,
- the control cables onto the gearbox.

❑ Refit the air resonator (see **12A**, **Fuel mixture**, **Air resonator: Removal - Refitting**, page **12A-2**) .

❑ Connect the battery (see **Battery: Removal - Refitting**) (80A, Battery).

Alternator pulley: Removal - Refitting

K4M

Equipment required
pneumatic or electric wrench
torque wrench
open-ended spanner for torque wrench

Tightening torques ▽	
alternator pulley	**80 N.m**

I - REMOVAL PREPARATION OPERATION

❏ Position the vehicle on a two-post lift (see **Vehicle: Towing and lifting**) .

❏ Disconnect the battery (see **Battery: Removal - Refitting**) .

❏ Remove:

- the accessories belt (see **11A**, **Top and front of engine**, **Accessories belt: Removal - Refitting**, page **11A-2**) ,
- the alternator (see **16A**, **Starting - Charging**, **Alternator: Removal - Refitting**, page **16A-1**) .

II - REMOVAL OPERATION FOR ALTERNATOR PULLEY

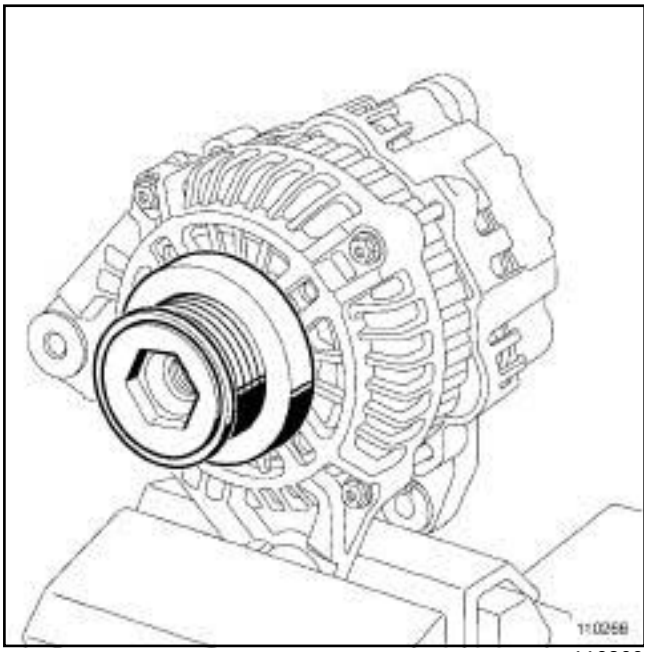

110266

❏ Unclip the alternator pulley protector (if equipped).

❏ Place the alternator in a vice jaw.

K4M

Mot. 1732

110276

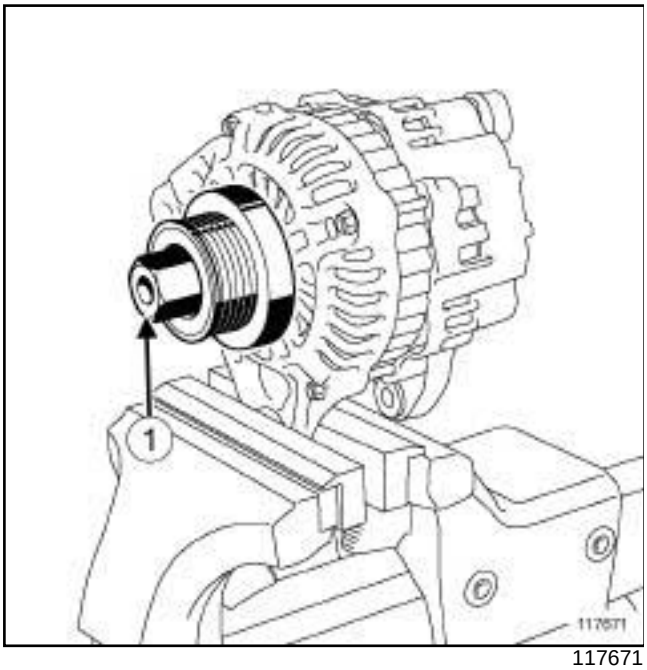

117671

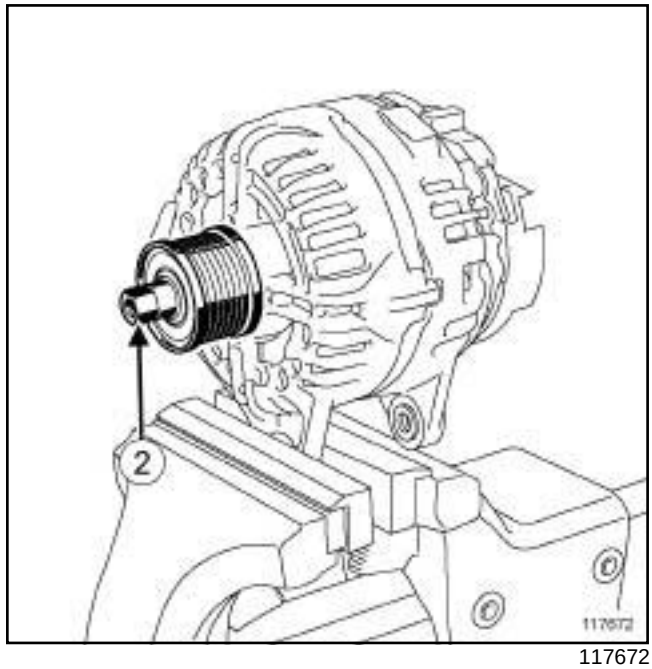

117672

❑ Position the hexagonal socket (**1**) or the splined socket (**2**) from the kitorin the alternator pulley (depending on the version).

K4M

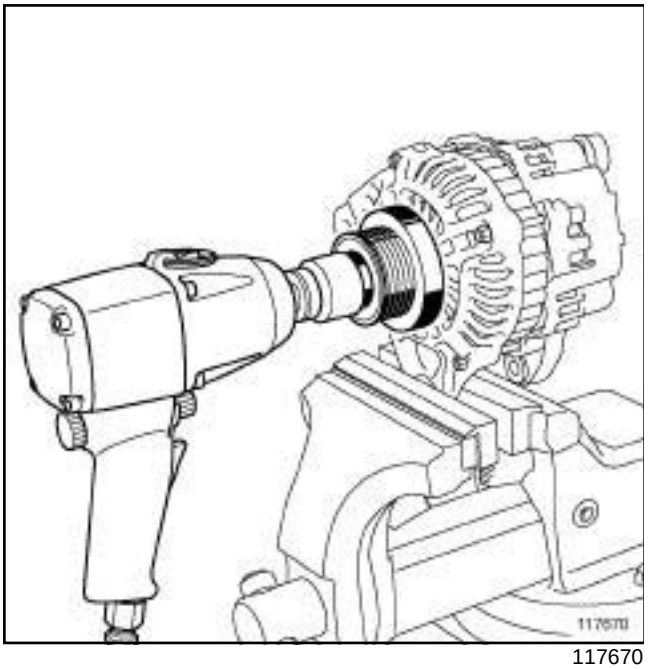

117670

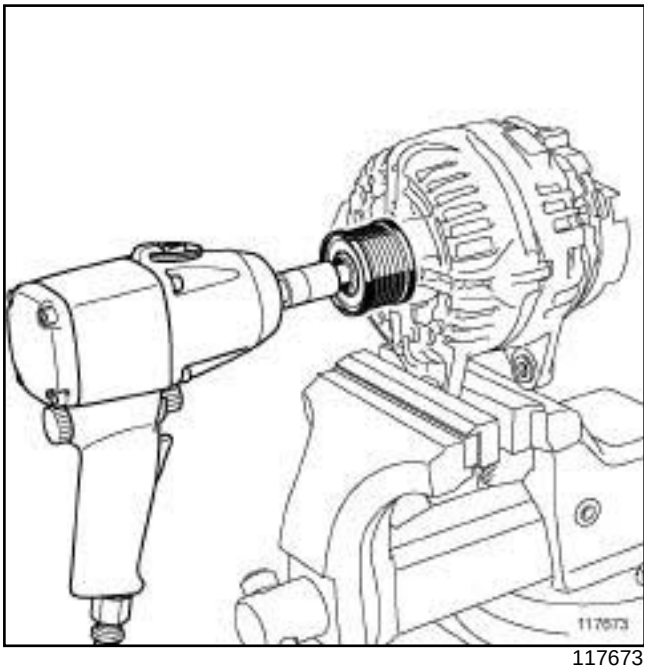

117673

❑

Note:

Always use a pneumatic or electric impact wrench to loosen the alternator pulley

Loosen the alternator pulley using a **pneumatic or electric wrench**.

❑

Remove:

- the tools,
- the alternator pulley.

III - REFITTING PREPARATION OPERATION

❑ **parts always to be replaced: Accessories belt**

parts always to be replaced: Accessories fixed roller

parts always to be replaced: Accessories belt tensioning roller

parts always to be replaced: Accessories tensioning roller bolt

parts always to be replaced: Alternator pulley

K4M

IV - REFITTING OPERATION FOR THE ALTERNATOR PULLEY

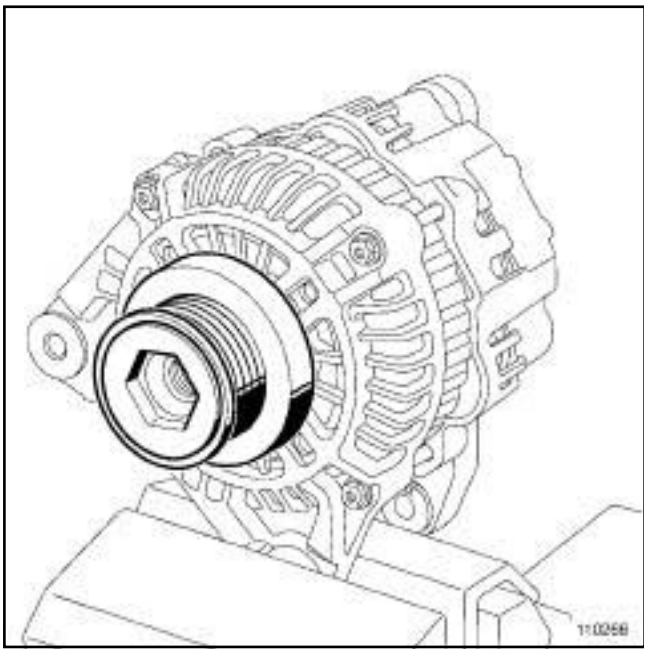

110266

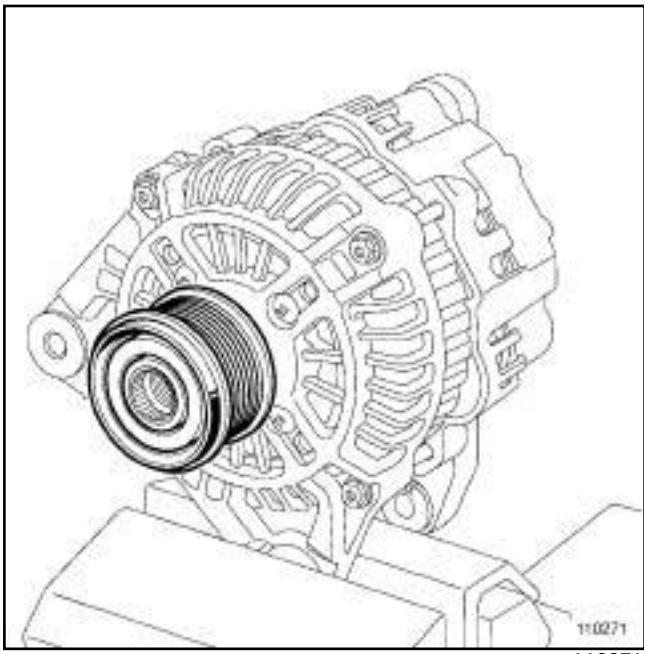

110271

❑ Tighten the new alternator pulley.

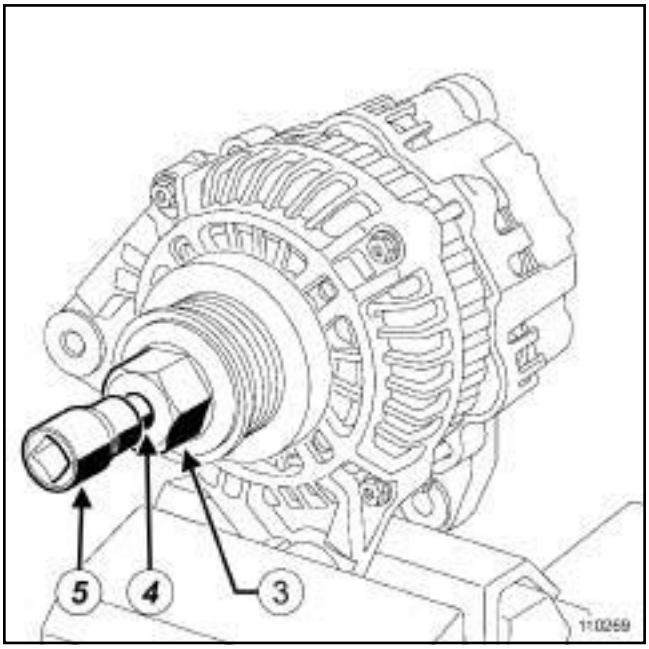

110269

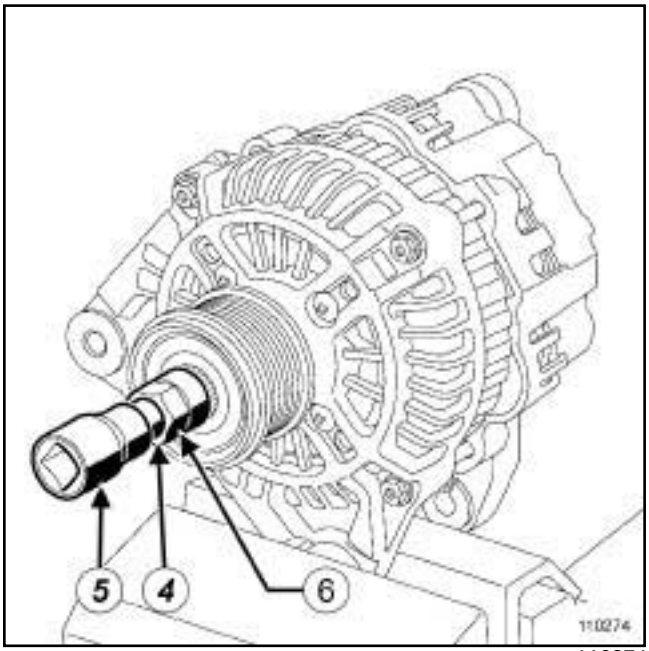

110274

❑ Position:

- the hexagonal socket (**3**) or the splined socket (**6**) in the alternator pulley (depending on the version),
- the end piece (**4**) in the recess of the alternator rotor,
- the end piece holder (**5**) on the end piece.

K4M

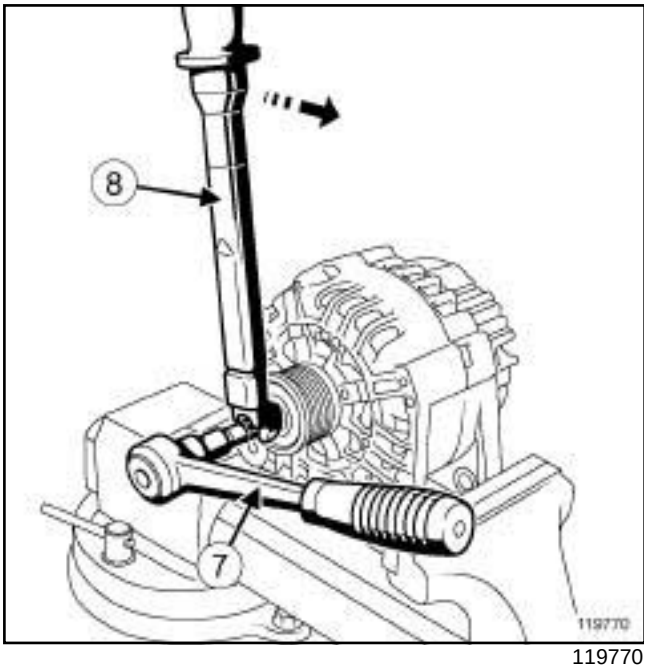

119770

- Immobilise the alternator rotor using the spanner (**7**) .
- Torque tighten the **alternator pulley (80 N.m)** using the **torque wrench** (**8**) equipped with a **15mm open-ended spanner for torque wrench**.
- Remove the tools.
- Clip the new protector onto the alternator pulley (if equipped).

V - FINAL OPERATION

- Refit:
  - the alternator (see **16A**, **Starting - Charging**, **Alternator: Removal - Refitting**, page **16A-1**) ,
  - the accessories belt (see **11A**, **Top and front of engine**, **Accessories belt: Removal - Refitting**, page **11A-2**) .
- Connect the battery (see **Battery: Removal - Refitting**) .

K9K

Tightening torques ▽	
alternator pulley nut	**80 N.m**

REMOVAL

I - REMOVAL PREPARATION OPERATION

❑ Disconnect the battery (see **Battery: Removal - Refitting**) (80A, Battery).

❑ Remove:

- the accessories belt (see **11A**, **Top and front of engine**, **Accessories belt: Removal - Refitting**, page **11A-2**) ,
- the alternator (see **16A**, **Starting - Charging**, **Alternator: Removal - Refitting**, page **16A-1**) .

II - OPERATION FOR REMOVAL OF PART CONCERNED

❑ Unclip the alternator pulley protector (if equipped).

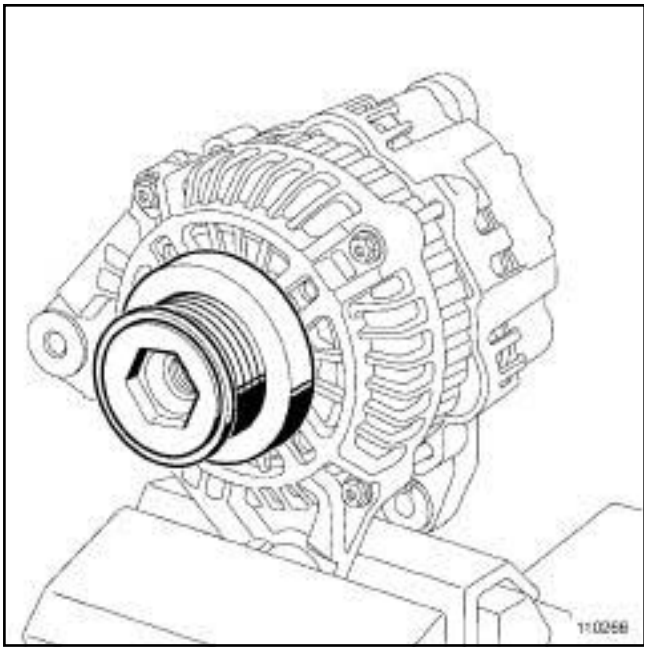

110266

❑ Place the alternator in a vice jaw.

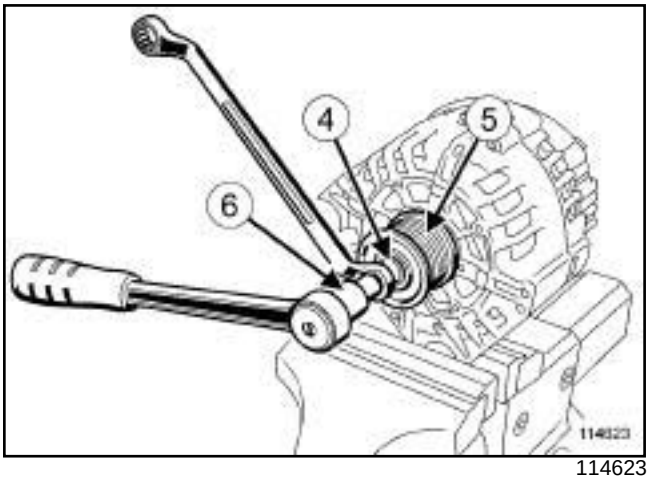

114623

❑ Fit:

- the splined socket (**4**) of thein the free wheel pulley (**5**) ,
- the end piece and holder assembly (**6**) of theon the alternator shaft.

❑ Immobilise the splined socket (**4**) .

❑ Loosen the alternator shaft.

❑

> Note:
>
> Do not use a screwdriver to remove or refit the pulley. A damaged or deformed front bearing can lead to damage to the alternator.

❑ Remove the free wheel pulley.

REFITTING

I - REFITTING OPERATION FOR PART CONCERNED

❑ Refit the pulley to the alternator shaft

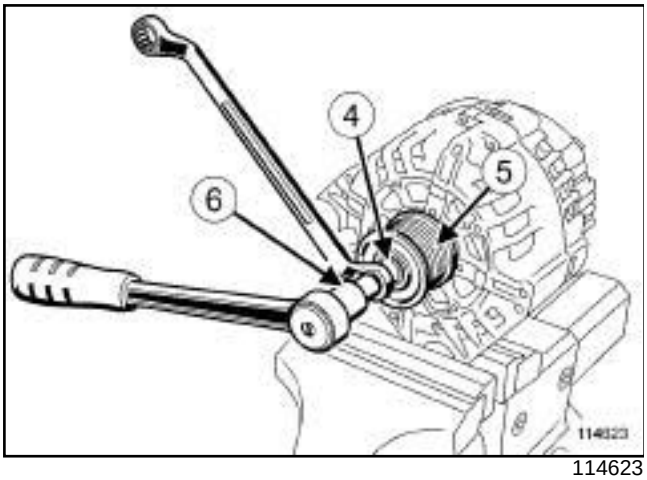

114623

- Fit:
  - the splined socket (**4**) of thein the free wheel pulley (**5**) ,
  - the end piece and holder assembly (**6**) of theon the alternator shaft.
- Immobilise the splined socket (**4**) .
- Torque tighten the **alternator pulley nut (80 N.m)**.
- Turn the pulley by hand to check that the rotor turns easily.
- Clip on the alternator pulley protector (if equipped).

II - FINAL OPERATION

- Refit:
  - the alternator (see **16A**, **Starting - Charging**, **Alternator: Removal - Refitting**, page **16A-1**) ,
  - the accessories belt (see **11A**, **Top and front of engine**, **Accessories belt: Removal - Refitting**, page **11A-2**) .
- Connect the battery (see **Battery: Removal - Refitting**) (80A, Battery).

K4M

Tightening torques ▽	
ignition coil bolts	**14 N.m**

REMOVAL

REMOVAL OPERATION

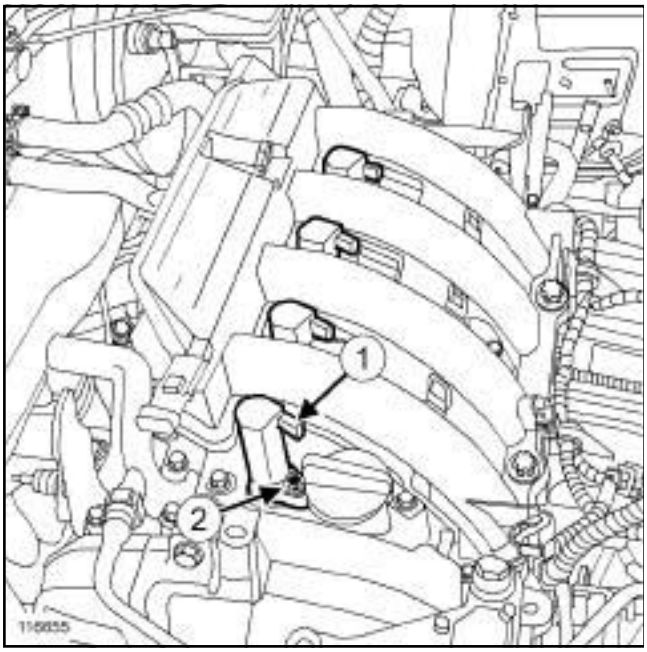

116655

❑ Disconnect the connectors (**1**) from the ignition coils.

❑ Remove:

- the ignition coil bolts (**2**) ,
- the ignition coils.

REFITTING

I - REFITTING PREPARATION OPERATION

❑ Always replace the **ignition coil bolts**.

❑ If necessary, replace the ignition coil O-rings.

106443

- When refitting the ignition harness, it is essential to apply a bead of **FLUOSTAR 2L 2 mm** in diameter around the inner edge of the high-tension caps on the side of the spark plugs and coil (see **Vehicle: Parts and consumables for the repair**) (04B, Consumables-Products).

II - REFITTING OPERATION

- Refit:
  - the ignition coils,
  - the new ignition coil bolts.
- Torque tighten the **ignition coil bolts (14 N.m)**.
- Connect the ignition coil connectors.

Petrol injection: List and location of components

K4M

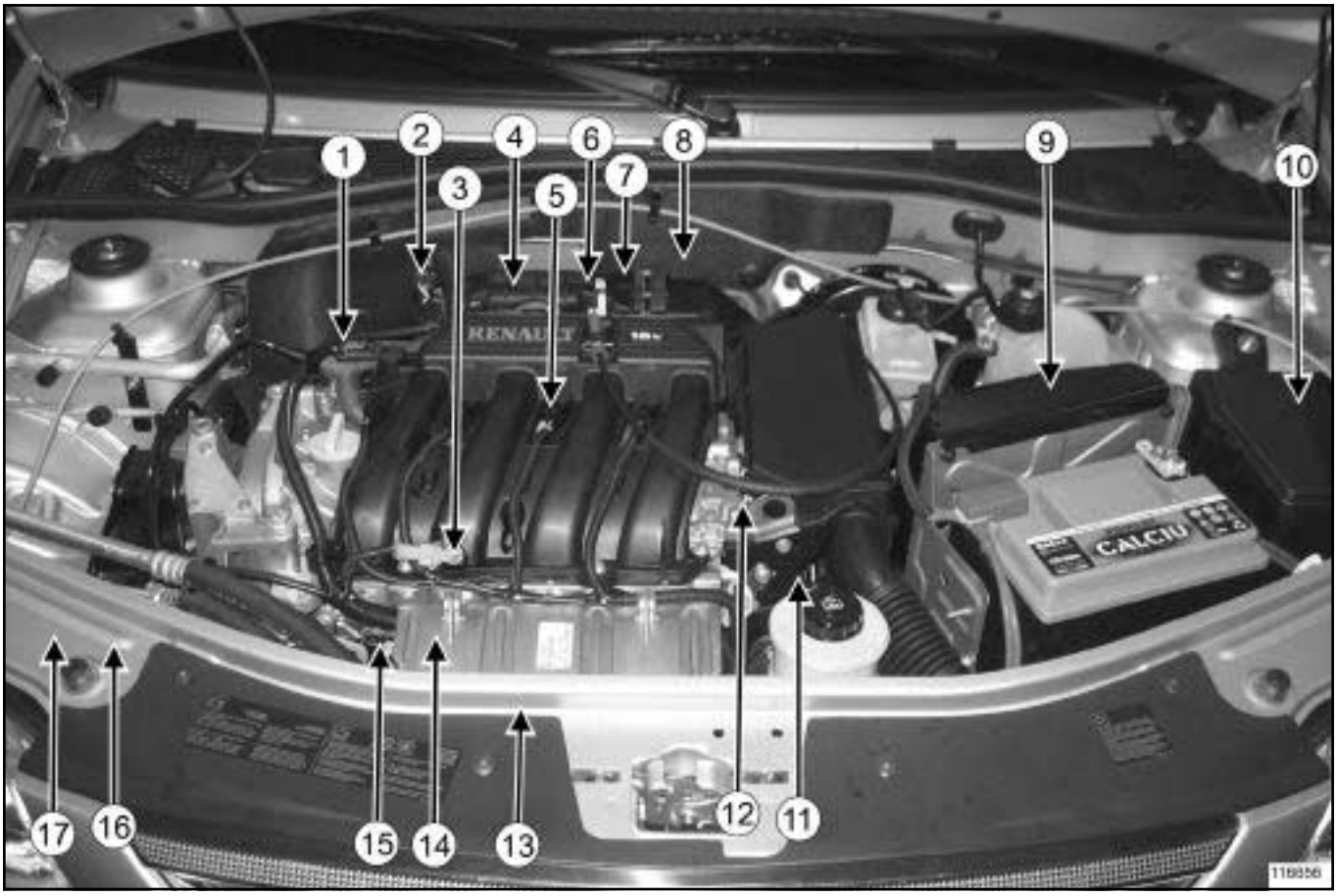

116656

(**1**) Air pressure sensor
(**2**) Idle speed stepper motor
(**3**) Air temperature sensor
(**4**) Throttle position potentiometer
(**5**) Ignition coil
(**6**) Throttle valve
(**7**) Upstream oxygen sensor
(**8**) Downstream oxygen sensor
(**9**) Injection computer
(**10**) Relay unit
(**11**) Crankshaft position sensor
(**12**) Coolant temperature sensor
(**13**) Pinking sensor
(**14**) Injectors
(**15**) Injector rail
(**16**) Fuel vapour recirculation solenoid valve
(**17**) Petrol vapour absorber

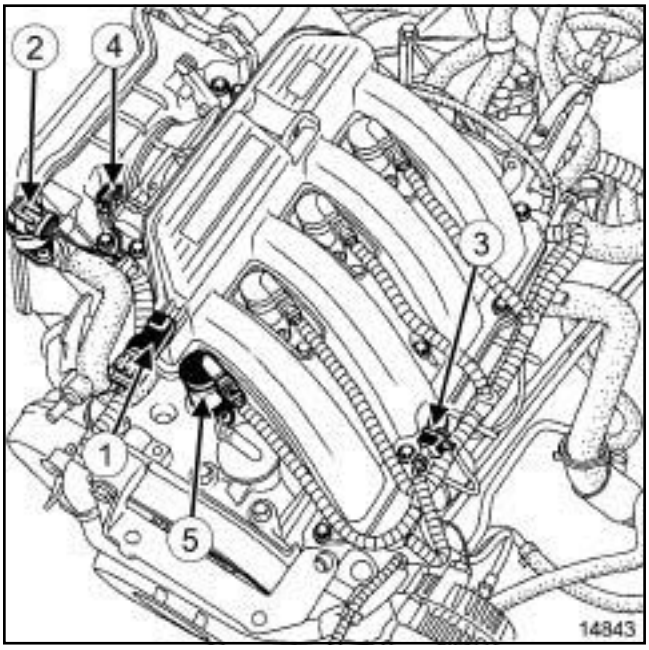

14843

(**1**) Air pressure sensor
(**2**) Idle speed stepper motor
(**3**) Air temperature sensor

K4M

(**4**) Throttle position potentiometer
(**5**) Ignition coil

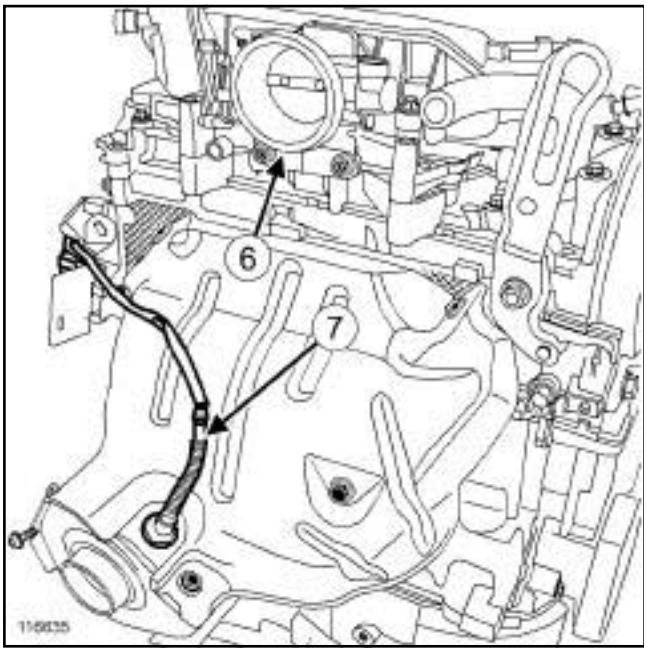

116635

(**6**) Throttle valve
(**7**) Upstream oxygen sensor

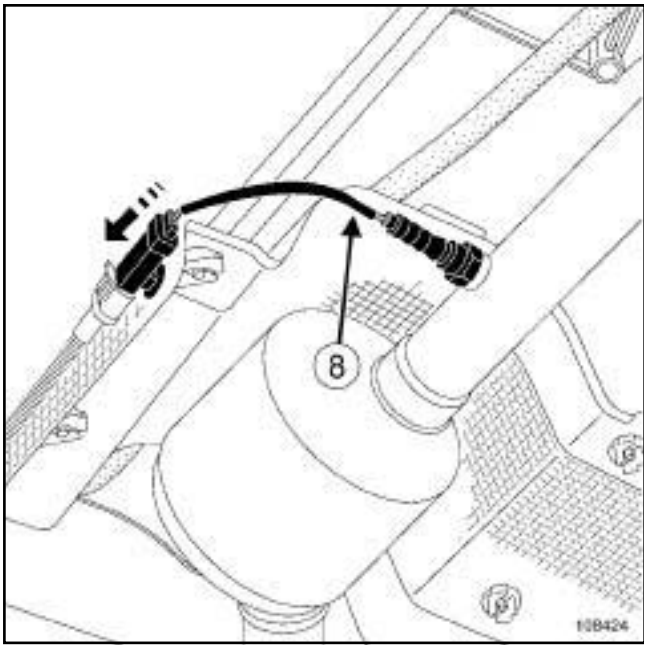

108424

(**8**) Downstream oxygen sensor

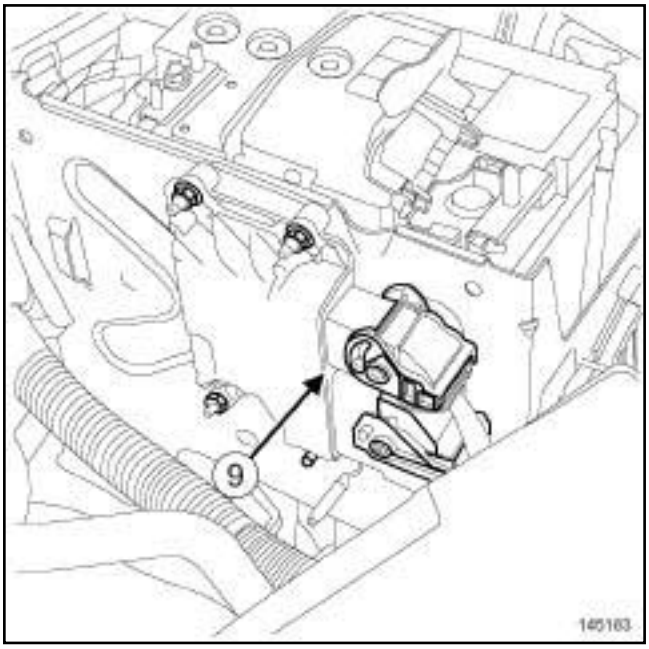

145183

(**9**) Injection computer

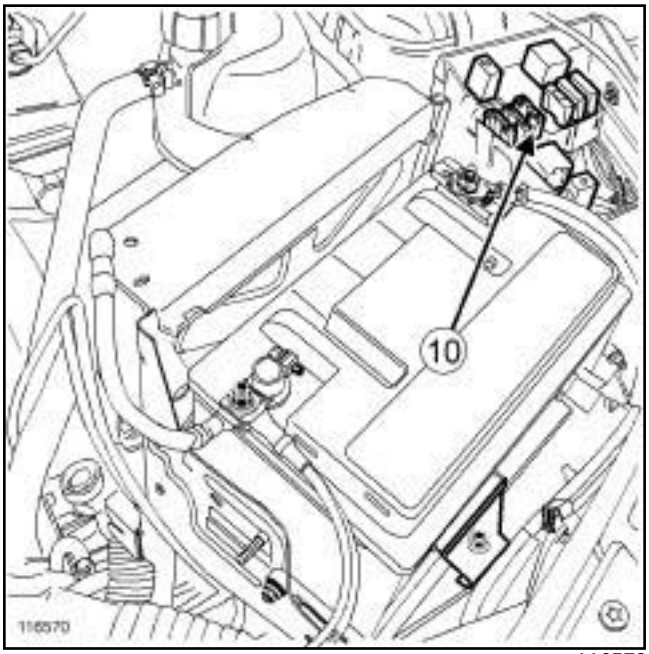

116570

(**10**) Relay unit

K4M

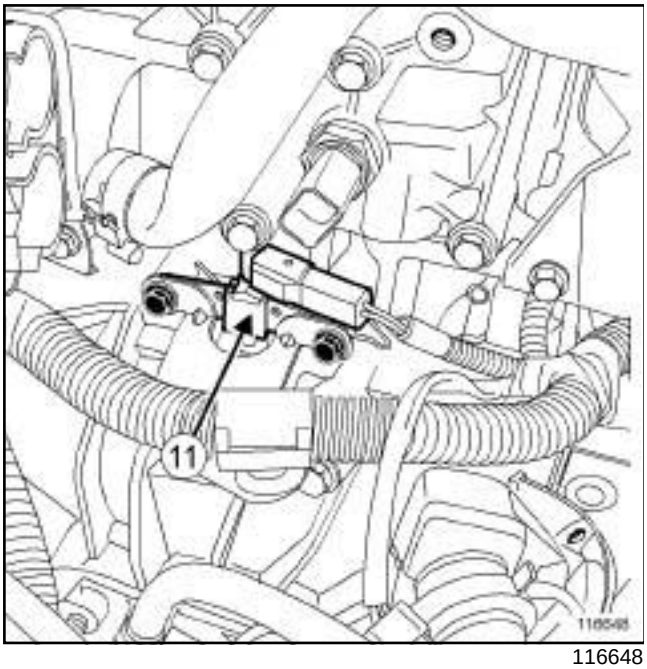

116648

(**11**) Crankshaft position sensor

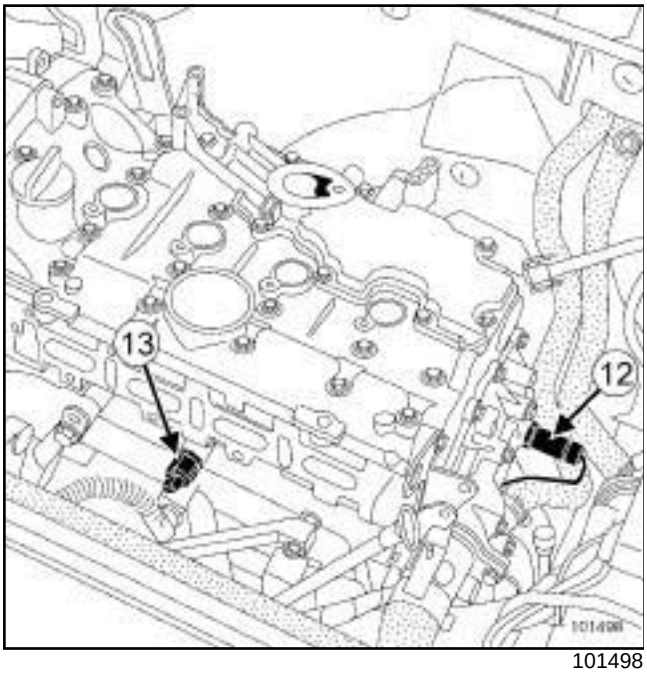

101498

(**12**) Coolant temperature sensor

(**13**) Pinking sensor

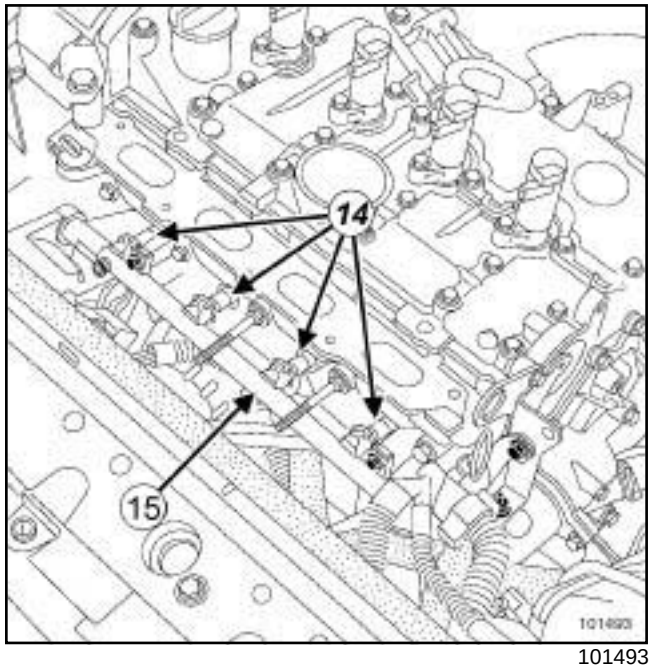

101493

(**14**) Injectors

(**15**) Injector rail

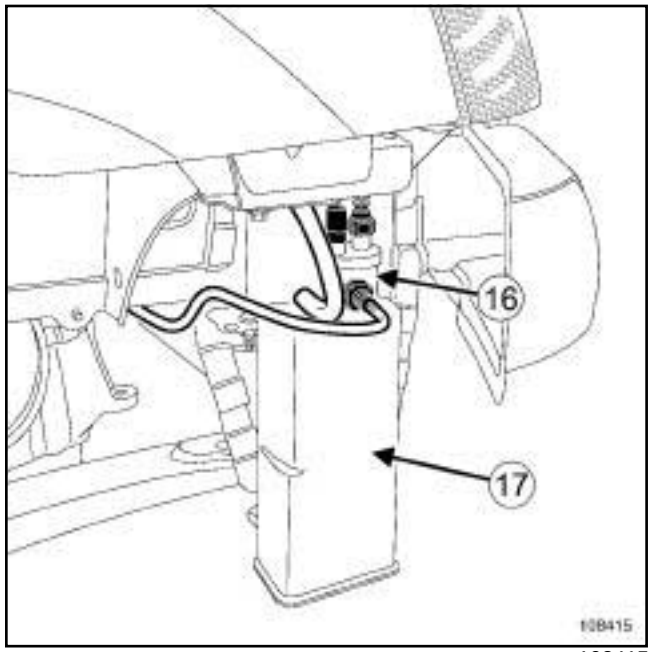

108415

(**16**) Fuel vapour recirculation solenoid valve

(**17**) Petrol vapour absorber

K4M

Tightening torques ▽	
upstream oxygen sensor	**45 N.m**
downstream oxygen sensor	**45 N.m**

WARNING

Do not use any product designed to improve the electrical contact in the injection computer and oxygen sensor connectors or on the bodies of the oxygen sensors.

Failure to respect this advice causes the oxygen sensor to malfunction and results in failure to comply with the emission control standard.

WARNING

If the connections are corroded, repair the wiring (see **Wiring: Precautions for repair**) (Technical Note 6015A, 88A, Wiring).

REMOVAL

I - REMOVAL PREPARATION OPERATION

1 - Upstream oxygen sensor

❏ Remove:

- the air resonator (see **12A**, **Fuel mixture**, **Air resonator: Removal - Refitting**, page **12A-2**) ,
- the air filter unit (see **12A**, **Fuel mixture**, **Air filter unit: Removal - Refitting**, page **12A-6**) .

2 - Downstream oxygen sensor

❏ Position the vehicle on a two-post lift (see **Vehicle: Towing and lifting**) (02A, Lifting equipment).

II - REMOVAL OPERATION

1 - Upstream oxygen sensor

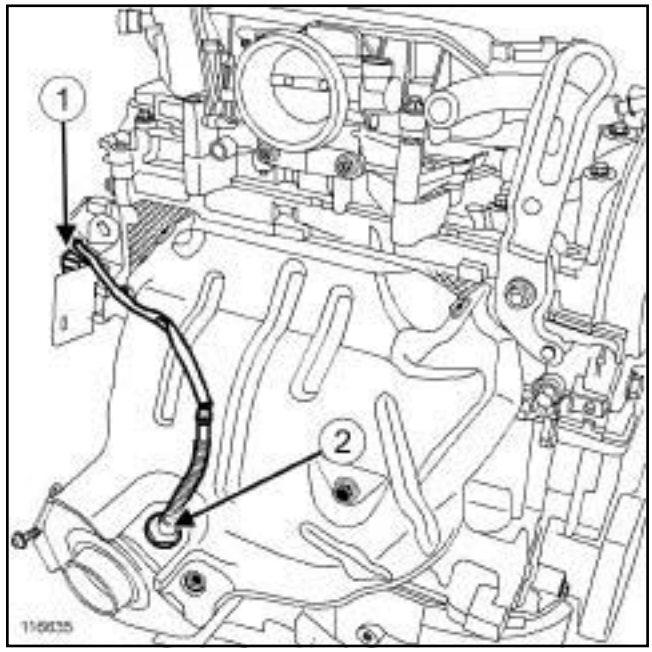

116635

❏ Disconnect the upstream oxygen sensor connector (**1**) .

❏ Unclip the upstream oxygen sensor wiring.

❏ Remove the upstream oxygen sensor (**2**) using the.

K4M

2 - Downstream oxygen sensor

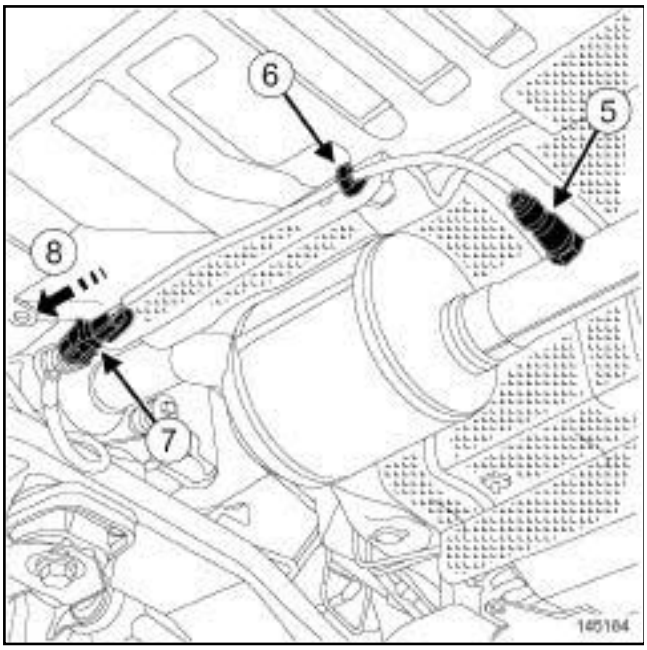

145184

- ❑ Unclip the wiring from the downstream oxygen sensor at (**6**) .
- ❑ Remove the downstream oxygen sensor connector (**7**) from its mounting by sliding it (**8**) .
- ❑ Disconnect the downstream oxygen sensor connector.
- ❑ Remove the downstream oxygen sensor ***(5)*** using the.

REFITTING

I - REFITTING OPERATION

1 - Upstream oxygen sensor

- ❑ Refit the upstream oxygen sensor.
- ❑ Torque tighten the **upstream oxygen sensor (45 N.m)** using the.
- ❑ Attach the upstream oxygen sensor wiring.
- ❑ Connect the upstream oxygen sensor connector.

2 - Downstream oxygen sensor

- ❑ Refit the downstream oxygen sensor.
- ❑ Torque tighten the **downstream oxygen sensor (45 N.m)** using the tool.
- ❑ Connect the downstream oxygen sensor connector.
- ❑ Refit the downstream oxygen sensor connector in its support.
- ❑ Clip on the downstream oxygen sensor wiring at ***(6)*** .

II - FINAL OPERATION

Upstream oxygen sensor

- ❑ Refit:
  - the air filter unit (see **12A**, **Fuel mixture**, **Air filter unit: Removal - Refitting**, page **12A-6**) ,
  - the air resonator (see **12A**, **Fuel mixture**, **Air resonator: Removal - Refitting**, page **12A-2**) .

K4M

Tightening torques ▽	
throttle valve potentiometer bolts	**2.4 N.m**
air filter unit bolts	**9 N.m**

REMOVAL

I - REMOVAL PREPARATION OPERATION

❑ Remove the air resonator (see **12A**, **Fuel mixture**, **Air resonator: Removal - Refitting**, page **12A-2**) .

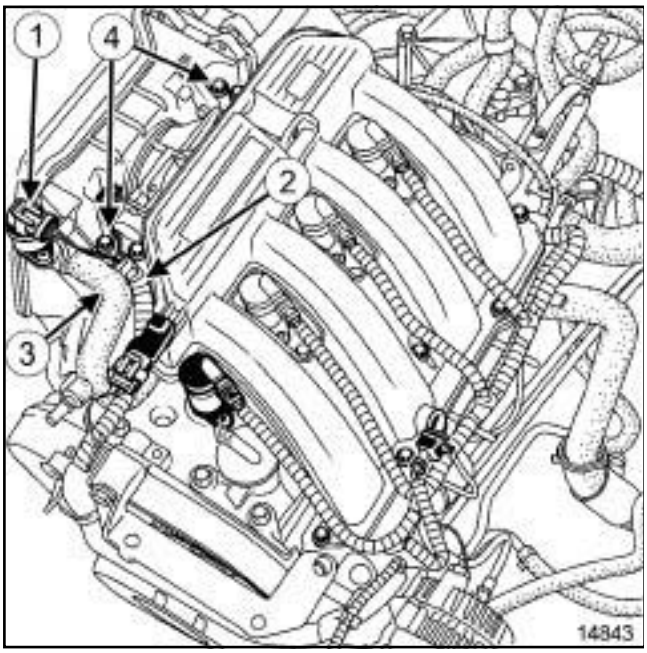

14843

❑ Disconnect:

- the connector (**1**) from the idle speed regulation stepping motor,
- the connector (**2**) from the throttle valve potentiometer,
- the petrol vapour recirculation pipe (**3**) .

❑ Remove the two bolts ***(4)*** from the air filter unit.

❑ Remove the air filter unit from the throttle valve.

II - REMOVAL OPERATION

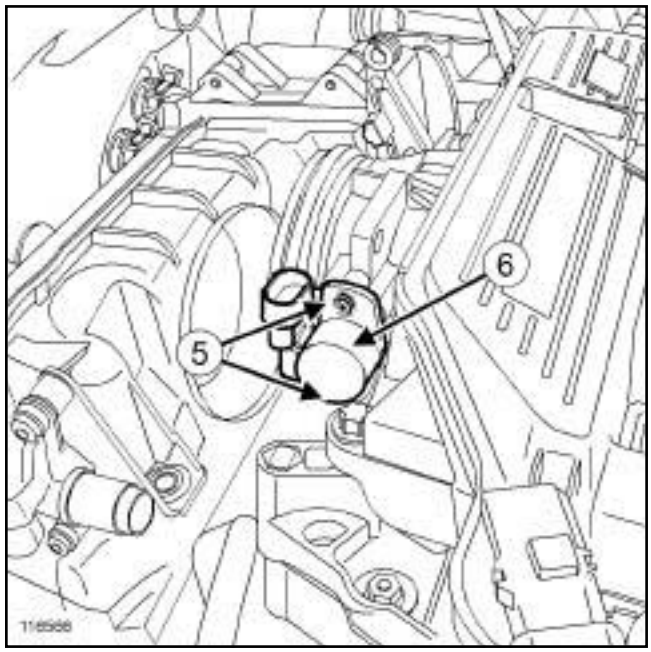

116566

❑ Remove:

- the two bolts (**5**) from the throttle valve potentiometer,
- the throttle valve potentiometer (**6**) .

REFITTING

I - REFITTING OPERATION

❑ Refit:

- the throttle valve potentiometer,
- the two throttle valve potentiometer bolts.

❑ Torque tighten the **throttle valve potentiometer bolts (2.4 N.m)** using the tool.

II - FINAL OPERATION

❑ Refit the air filter unit in place.

❑ Refit the two air filter unit bolts.

❑ Torque tighten the **air filter unit bolts (9 N.m)**.

❑ Connect:

- the petrol vapour recirculation pipe,
- the connector from the throttle valve potentiometer,
- the idle speed regulation stepping motor connector.

❑ Refit the air resonator (see **12A**, **Fuel mixture**, **Air resonator: Removal - Refitting**, page **12A-2**) .

K4M

Equipment required
Diagnostic tool

Tightening torques ▽	
injection computer nuts	**8 N.m**

WARNING

Do not use any product designed to improve the electrical contact in the injection computer and oxygen sensor connectors or on the bodies of the oxygen sensors.

Failure to respect this advice causes the oxygen sensor to malfunction and results in failure to comply with the emission control standard.

WARNING

If the connections are corroded, repair the wiring (see **Wiring: Precautions for repair**) (Technical Note 6015A, 88A, Wiring).

REMOVAL

I - REMOVAL PREPARATION OPERATION

❑ Disconnect the battery (see **Battery: Removal - Refitting**) (80A, Battery).

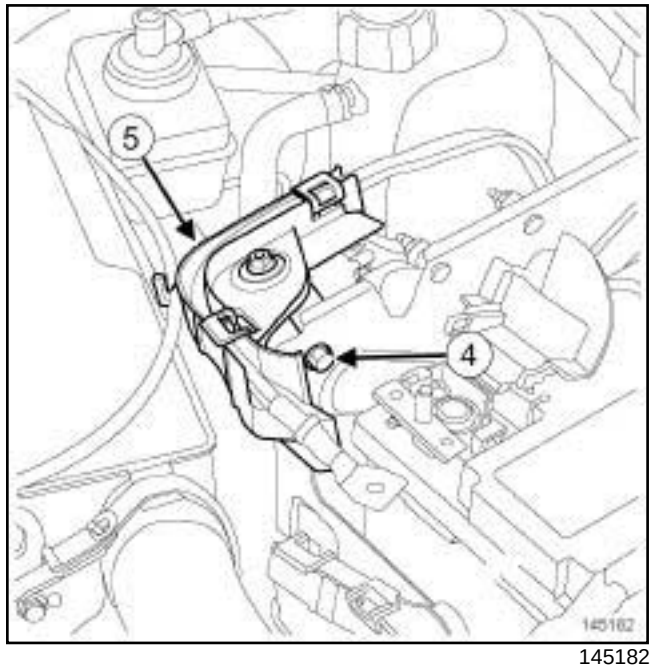

145182

❑ Remove the bolt (**4**) from the channel (**5**) .

❑ Move aside the channel.

II - REMOVAL OPERATION

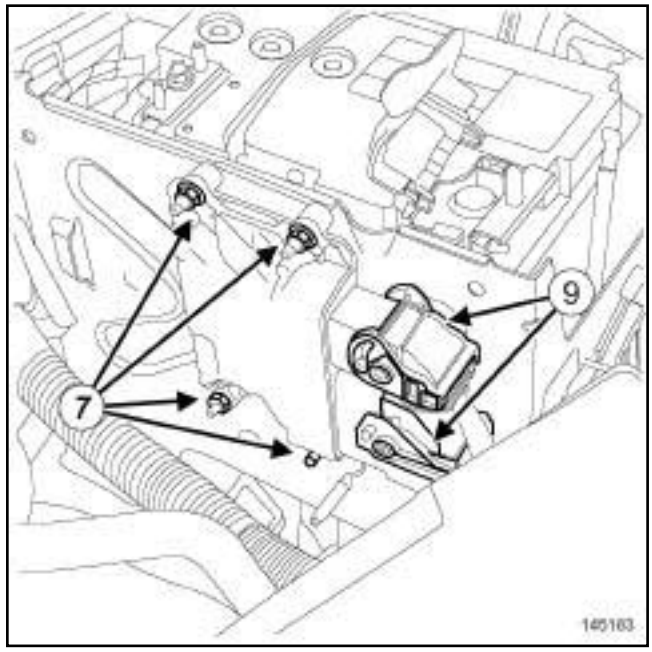

145183

❑ Disconnect the two injection computer connectors (**9**) .

❑ Remove:

- the injection computer nuts ***(7)*** ,

- the injection computer.

K4M

REFITTING

I - REFITTING OPERATION

- ❑ Refit the injection computer.
- ❑ Torque tighten the **injection computer nuts (8 N.m)**.
- ❑ Connect the two connectors of the injection computer.

II - FINAL OPERATION

- ❑ Refit the channel.
- ❑ Connect the battery (see **Battery: Removal - Refitting**) (80A, Battery).

III - WHEN REPLACING THE INJECTION COMPUTER

- ❑ The computer supplied as a spare part is not operational (also known as "blank").
- ❑ After replacing the injection computer, program it using the **Diagnostic tool** (see **Technical Note 9869A, Procedure for programming and reprogramming the computer**).
- ❑ Carry out the configuration and/or necessary programming (see **Fault finding - Replacement of components)** (17B, Petrol injection).

K4M

Equipment required
Diagnostic tool

Tightening torques ▽	
crankshaft position sensor bolts	**8 N.m**

REMOVAL

I - REMOVAL PREPARATION OPERATION

❑ Remove the air resonator (see **12A**, **Fuel mixture**, **Air resonator: Removal - Refitting**, page **12A-2**) .

II - REMOVAL OPERATION

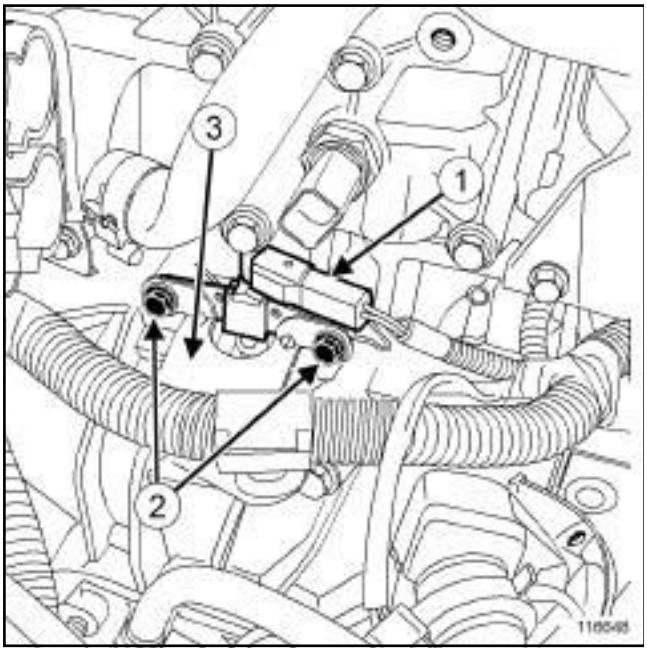

116648

❑ Disconnect the crankshaft position sensor connector (**1**) .

❑ Remove the two bolts (**2**) from the crankshaft position sensor.

❑ Move aside the engine wiring harness mounting support (**3**) .

❑ Remove the crankshaft position sensor.

REFITTING

I - REFITTING OPERATION

❑ Refit the crankshaft position sensor.

❑ Refit the engine wiring harness mounting support.

❑ Refit the two bolts of the crankshaft position sensor.

❑ Torque tighten the **crankshaft position sensor bolts (8 N.m)**.

II - FINAL OPERATION

❑ Refit the air resonator (see **12A**, **Fuel mixture**, **Air resonator: Removal - Refitting**, page **12A-2**) .

III - WHEN REPLACING THE CRANKSHAFT POSITION SENSOR

❑ Program the flywheel target:

- perform a deceleration with injection cut-off in second, third, fourth or fifth gear between **3500** and **3000 rpm**, for at least **2 seconds**,
- perform a deceleration with injection cut-off in second, third, fourth or fifth gear between **2400** and **2000 rpm**, for at least **3 seconds**.

❑ Use the **Diagnostic tool** to check that this programming has been successfully completed, **ET060 Flywheel signal with engine running**.

❑ Read the fault codes.

❑ Repair if necessary.

❑ Clear the fault codes.

❑ Check that the vehicle is working correctly.

K4M

Tightening torques ▽	
injector rail bolts	**9 N.m**
injector rail protector nuts	**21 N.m**

IMPORTANT
Wear leaktight gloves (Nitrile type) for this operation.

IMPORTANT

During this operation, be sure to:

- refrain from smoking or bringing red hot objects close to the working area,
- be careful of fuel splashes when disconnecting the union.

IMPORTANT
Be careful when removing the injectors or the injection rail as there will be a quantity of fuel in the rail and the union.

REMOVAL

I - REMOVAL PREPARATION OPERATION

❏ Disconnect the battery (see **Battery: Removal - Refitting**) (80A, Battery).

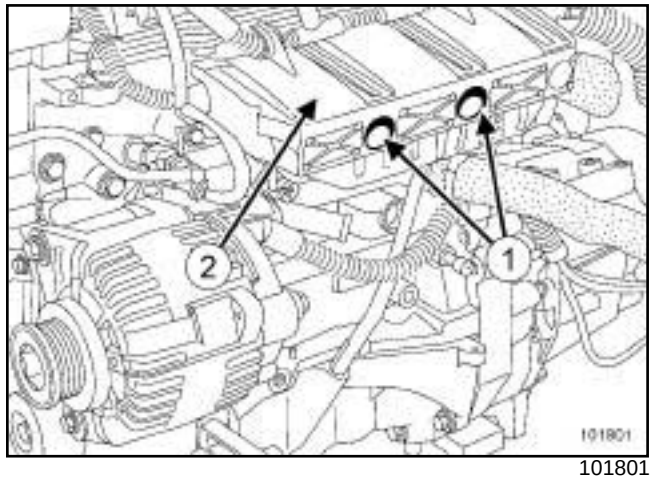

101801

❏ Remove:

- the two nuts (**1**) from the injector rail protector,
- the injector rail protector (**2**) .

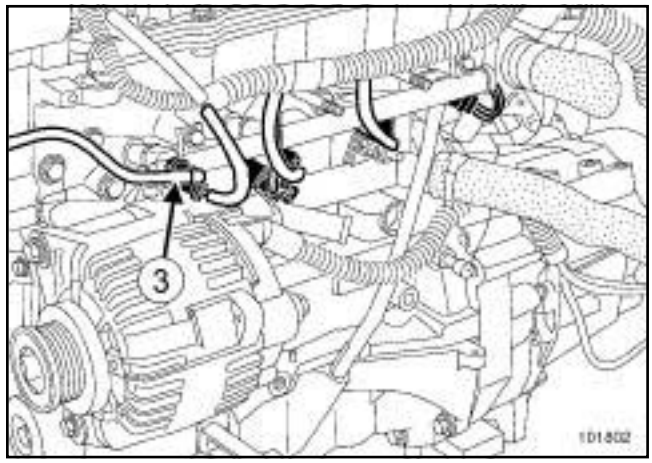

101802

❏ Disconnect the fuel supply pipe union (**3**) on the injector rail.

❏ Fit blanking plugs.

K4M

II - REMOVAL OPERATION

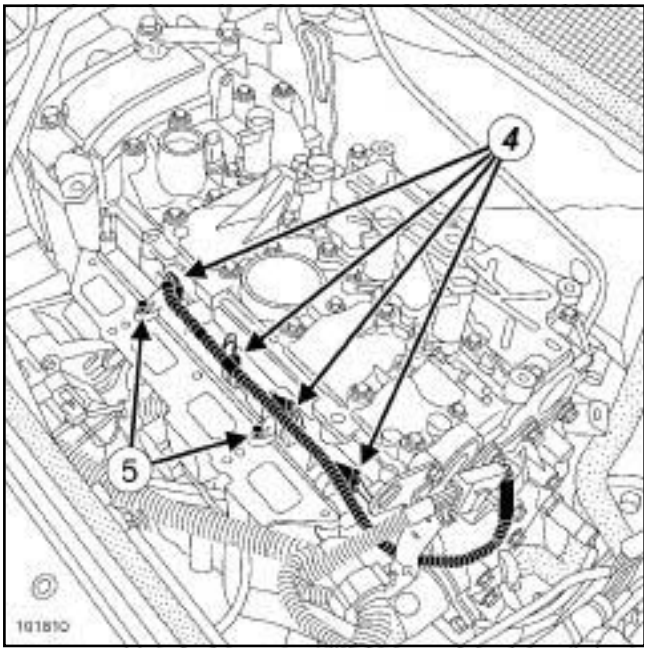

101810

- ❑ Disconnect the injector connectors (**4**) .
- ❑ Remove:
  - the injector rail bolts (**5**) ,
  - the « injector rail-injector» assembly by pulling it carefully towards the front of the vehicle.

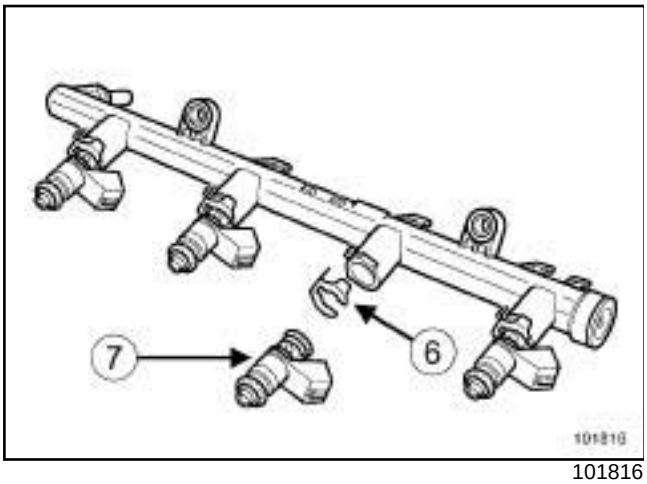

101816

- ❑ Remove:
  - the retaining clips (**6**) from the injectors,
  - the injectors (**7**) .
- ❑ Insert the blanking plugs.

REFITTING

I - REFITTING PREPARATION OPERATION

- ❑ **parts always to be replaced: injector clip on injector rail**.
- ❑ **parts always to be replaced: injector seal**.
- ❑ Refit:
  - new seals on each injector,
  - the injectors on the injector rail,
  - a new clip on each injector.

II - REFITTING OPERATION

- ❑ Remove the blanking plugs.
- ❑ Fit the « injector rail-injector » assembly.
- ❑ Torque tighten the **injector rail bolts (9 N.m)**.

III - FINAL OPERATION

- ❑ Connect:
  - the injector connectors,
  - the fuel supply union onto the injector rail,
- ❑ Refit the injector rail protector.
- ❑ Torque tighten the two **injector rail protector nuts (21 N.m)**.
- ❑ Connect the battery (see **Battery: Removal - Refitting**) (80A, Battery).

Engine cooling system: Operating diagram

K9K, and 796

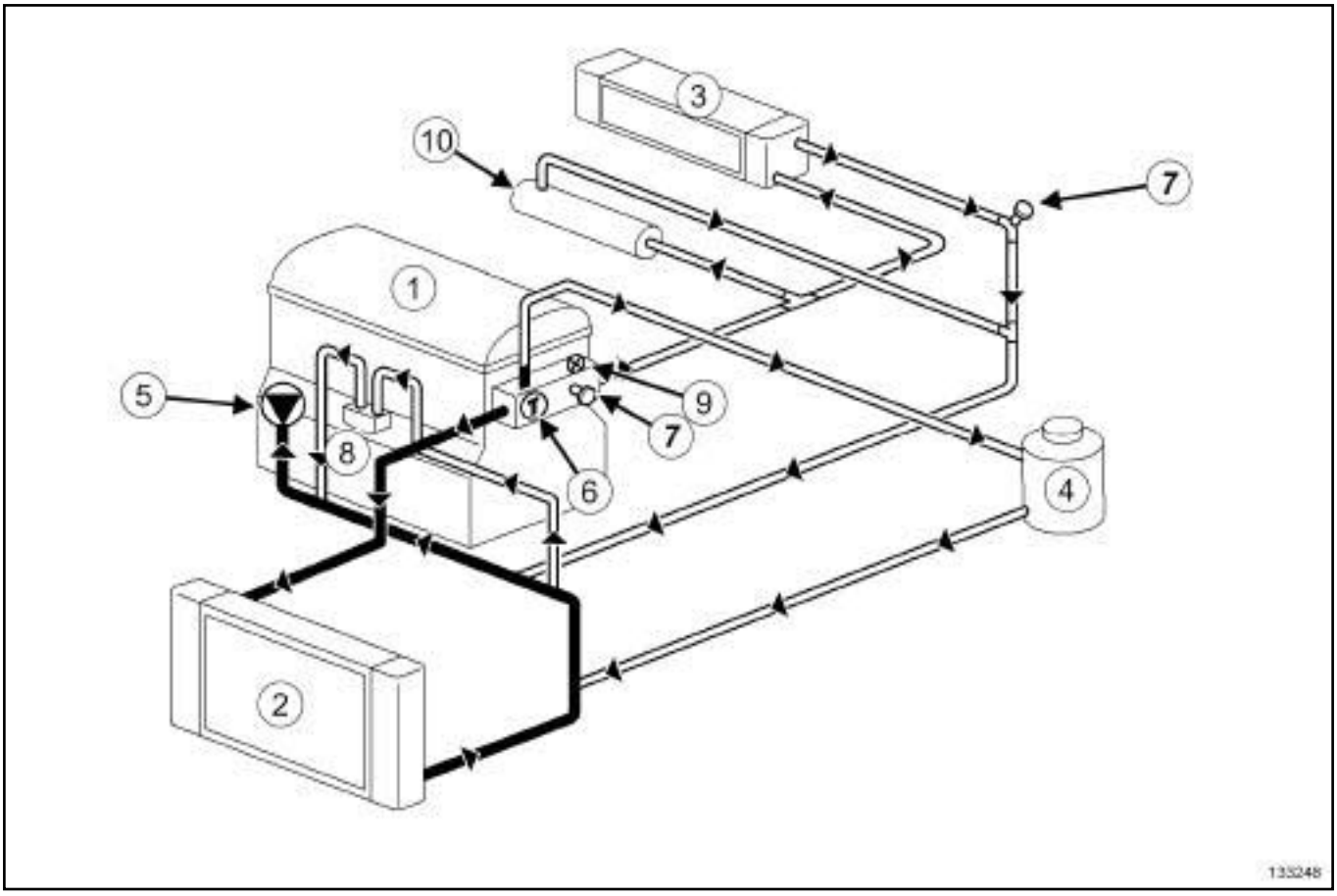

133248

(**1**)	Engine
(**2**)	Cooling radiator
(**3**)	Heater radiator
(**4**)	Expansion bottle
(**5**)	Water pump
(**6**)	Thermostat
(**7**)	Bleed screw
(**8**)	Oil-water heat exchanger
(**9**)	Temperature switch
(**10**)	EGR

Vehicles in the current range have cooling systems with the following basic specifications:

- hermetically-sealed pressurised circuit (expansion chamber valve),
- circuit using a type "D" coolant,
- passenger compartment heating system via a "heater matrix" type radiator under the dashboard.

I - GRADE AND QUANTITY OF COOLANT

Engine	Quantity (litres)	Grade
K4M	Approximately 5.45 (version with AC)	**GLACEOL RX (TYPE D)**
K9K	Approximately 4.5 (version without AC)	Use coolant only.

Special notes:

- protection down to **-25°C ± 2** for cold and temperate countries,
- protection down to **-40°C ± 2** for very cold countries

II - THERMOSTAT

Engine	Start of opening (°C)	End of opening (°C)
K4M	89	99 ± 2
K9K		

IMPORTANT

When working in the engine compartment, take care as the radiator fan(s) may start up unexpectedly (risk of being cut).

To avoid any risk of serious burns when the engine is hot:

- do not open the expansion bottle cap,
- do not drain the cooling system,
- do not open the bleed screw(s).

Note:

There are two procedures for checking the cooling system:

- the procedure using the
- the procedure using the

Expansion bottle cap valve rating:

Expansion bottle cap with ...	Valve rating
... a brown circle	**1.2 bar**
... a yellow marking	**1.4 bar**
... a white marking	**1.6 bar**
... a grey marking	**1.8 bar**

I - CHECKING THE COOLING SYSTEM USING THE TOOL (MOT. 1700)

❑

WARNING

If the coolant is leaking from the expansion bottle cap, replace the valve.

1 - Checking the expansion bottle cap valve

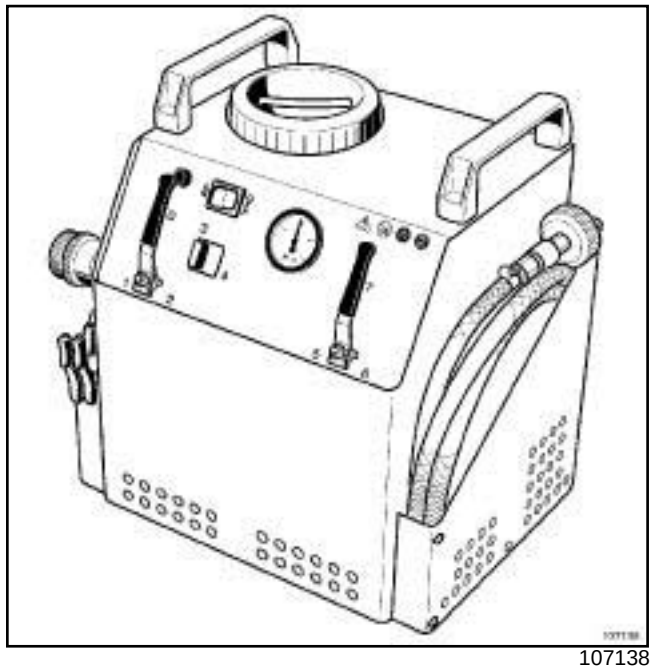

107138

❑ Use the cooling system filling and diagnostic tool. Consult the user's manual for this tool (see **Cooling system filling and diagnostic tool: Use**) (Technical Note 3857A, 19A, Cooling).

2 - Checking the sealing of the cooling circuit

❑ Use the cooling system filling and diagnostic tool. Consult the user's manual for this tool (see **Cooling system filling and diagnostic tool: Use**) (Technical Note 3857A, 19A, Cooling).

II - CHECKING THE COOLING SYSTEM USING THE TOOL (MS. 554-07)

❑

WARNING

If the coolant is leaking from the expansion bottle cap, replace the valve.

1 - Checking the expansion bottle cap valve

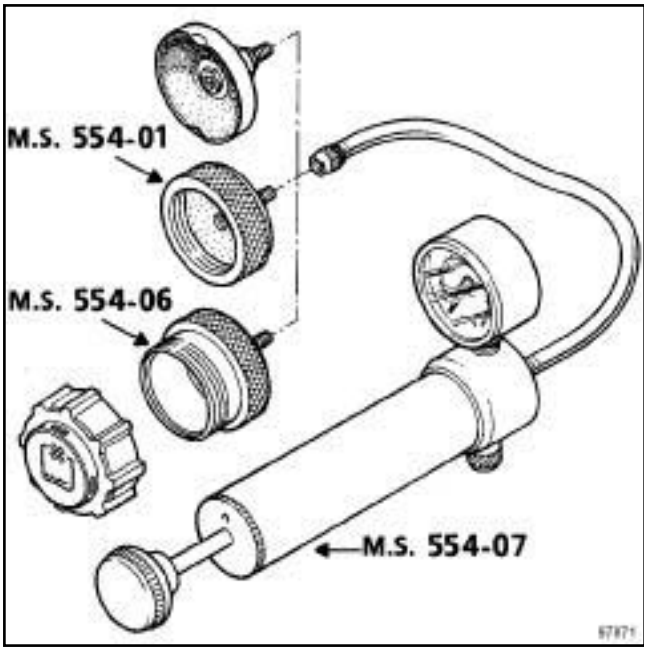

97871

- ❑ Fit onto the tester, the adapter **(Ms. 554-06)**.
- ❑ Fit the expansion bottle cap to the adapter **(Ms. 554-06)**.

> Note:
>
> The pressure should not drop; if it does, look for the leak.

- ❑ Pump with the, the pressure should stabilise at the expansion bottle cap valve rating with a test tolerance of ± **0.1 bar.**

2 - Checking the sealing of the cooling circuit

- ❑ Replace the expansion bottle cap with the adapter **(Ms. 554-01)**.
- ❑ Connect on the adapter **(Ms. 554-01)** the tool.
- ❑ Pump with theto put the cooling circuit under pressure.
- ❑ Stop pumping at **0.1 bar** below the valve rating for the expansion bottle cap valve.

> Note:
>
> The pressure should not drop; if it does, look for the leak.

- ❑ Gradually unscrew the union of theto decompress the cooling system then remove the adapter **(Ms. 554-01)** and refit the expansion bottle cap.

K4M

I - LIST OF COMPONENTS

The engine cooling system is composed of:

- an engine cooling fan assembly (see **19A**, **Cooling**, **Engine cooling fan assembly: Removal - Refitting**, page **19A-27**) ,
- a cooling radiator (see **19A**, **Cooling**, **Cooling radiator: Removal - Refitting**, page **19A-9**) ,
- a coolant pump (see **19A**, **Cooling**, **Coolant pump: Removal - Refitting**, page **19A-13**) ,
- a thermostat (see **19A**, **Cooling**, **Thermostat: Removal - Refitting**, page **19A-19**) ,
- a water chamber (see **19A**, **Cooling**, **Water chamber: Removal - Refitting**, page **19A-22**) ,
- a coolant pump inlet pipe (see **19A**, **Cooling**, **Coolant pump inlet pipe: Removal - Refitting**, page **19A-34**) ,
- an expansion bottle (see **19A**, **Cooling**, **Expansion bottle: Removal - Refitting**, page **19A-38**) ,
- a coolant temperature sensor (see **19A**, **Cooling**, **Coolant temperature sensor: Removal - Refitting**, page **19A-40**) .

II - LOCATION OF COMPONENTS

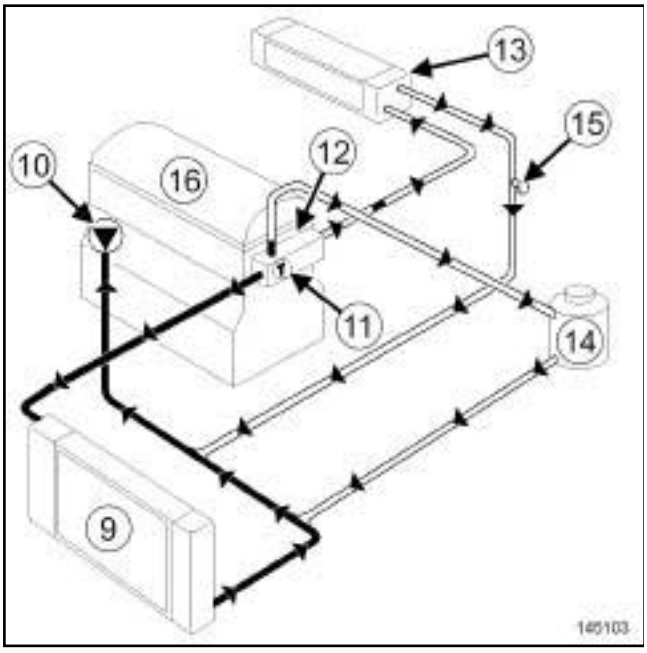

145103

(**9**)	Cooling radiator
(**10**)	Water pump
(**11**)	Thermostat
(**12**)	Water chamber
(**13**)	Heater radiator
(**14**)	Expansion bottle
(**15**)	Bleed screw
(**16**)	Engine

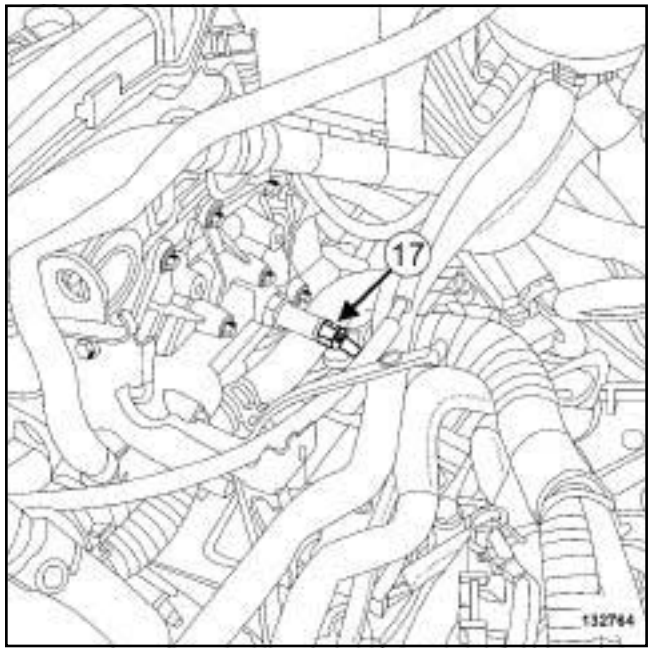

132764

(**17**)	Coolant temperature sensor

Special tooling required	
Mot. 1448	Remote operation pliers for hose clips.
Car. 1363	Set of trim removal levers.

Equipment required
coolant recovery tray
compressed air nozzle

IMPORTANT

When working in the engine compartment, take care as the radiator fan(s) may start up unexpectedly (risk of being cut).

To avoid any risk of serious burns when the engine is hot:

- do not open the expansion bottle cap,
- do not drain the cooling system,
- do not open the bleed screw(s).

I - DRAINING

❑ Position the vehicle on a two-post lift (see **Vehicle: Towing and lifting**) (02A, Lifting equipment).

❑ Remove:

- the expansion bottle cap,
- the engine undertray.

❑ Remove the front bumper (see **Front bumper assembly: Exploded view**) (55A, Exterior protection).

❑ Position the **coolant recovery tray** under the vehicle.

❑ Remove the cooling radiator bottom hose clip using theoror **(Mot. 1448)**.

❑ Open the cooling system by removing the cooling radiator bottom hose using the tool **(Car. 1363)**.

❑ Use a **compressed air nozzle** to blow air into the system through the expansion bottle opening to remove as much coolant as possible.

II - CLEANING

❑ Fill the cooling system with water through the expansion bottle.

❑ Let the water run until the water collected from the cooling radiator bottom hose becomes clear.

❑ Use a **compressed air nozzle** to blow air into the system through the expansion bottle opening to remove as much coolant as possible.

❑ Refit the cooling radiator bottom hose.

III - FILLING

❑

Note:

There are two procedures for filling the cooling system:

- the method using the tool, is recommended by Renault. It saves a considerable amount of time because it does not require the cooling system bleed screws to be opened,
- the procedure without a special tool.

1 - Filling procedure with the tool (Mot. 1700)

❑ Fill the cooling system with engine coolant recommended by the manufacturer (see **Vehicle: Parts and consumables for the repair**) (04B, Consumables - Products) using the tool. Consult the user's manual for this tool (see) (Technical Note 3857A, 19A, Cooling).

2 - Filling method without special tools

❑

WARNING

It is essential to open all of the bleed screws to remove as much as air as possible in the cooling system. Failure to perform this procedure may prevent the cooling system from filling properly and may damage the engine.

K4M

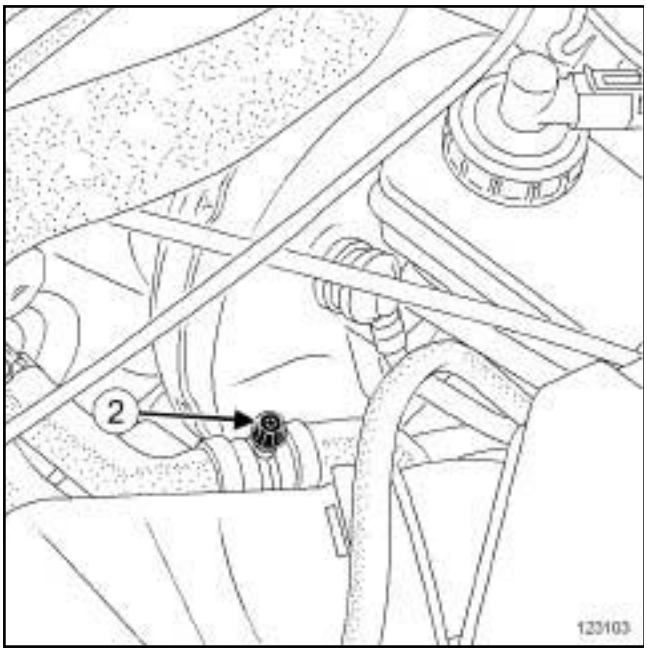

123103

❏ Open the bleed screw (**2**) .

K9K

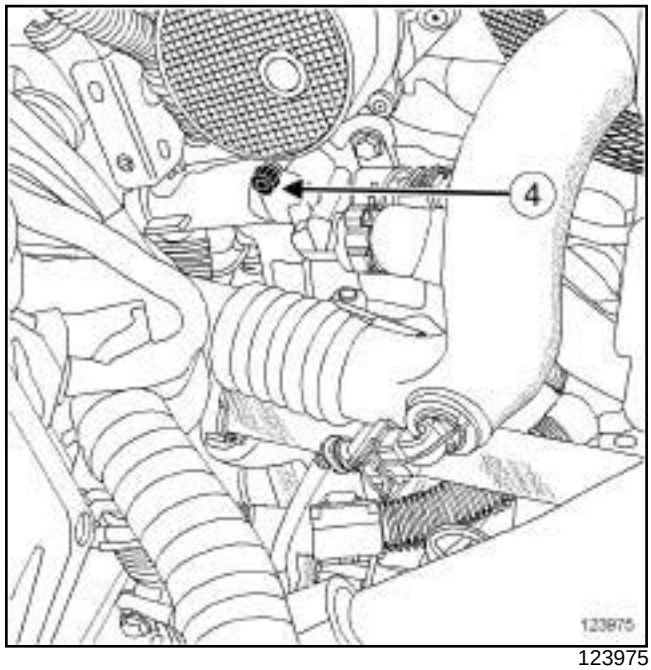

123975

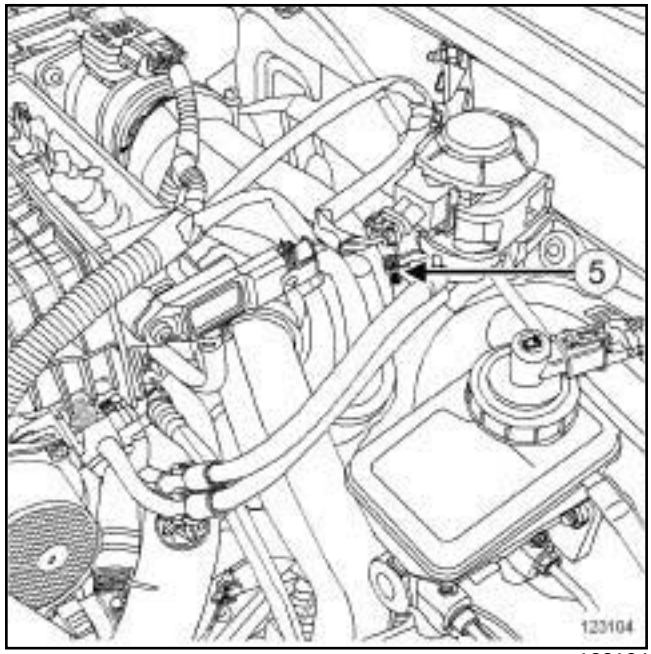

123104

❏ Open the bleed screws (**4**) and (**5**) .

❏ Fill the cooling system with engine coolant recommended by the manufacturer (see **Vehicle: Parts and consumables for the repair**) (04B, Consumables - Products) via the expansion bottle until it overflows.

❏ Close all the bleed screws as soon as the coolant starts to flow in a continuous stream.

- ❑ Pressurise the system using the toolto check that there are no leaks (see **19A**, **Cooling**, **Engine cooling system: Check**, page **19A-3**) .
- ❑ Refit the expansion bottle cap.
- ❑ Clean any surfaces soiled by the coolant.

IV - BLEEDING

❑

> **WARNING**
> Do not open the bleed screw whilst the engine is running; this would damage the engine.

Start the engine.

K4M

- ❑ Maintain the engine speed at **2,500 rpm** until the engine cooling fan starts for the third time (time required for automatic degassing).

K9K

- ❑ Maintain the engine speed at **1500 rpm** varying the engine speed rapidly (until the maximum engine speed is reached) 2 to 3 times approximately every **2 minutes** until the engine cooling fan starts for the second time.

- ❑ Check that the heating is operating correctly.
- ❑ Let the engine cool until it reaches a coolant temperature below **50°C**.
- ❑ Make sure the coolant fluid level is at the « Maximum » mark.
- ❑ Refit the expansion bottle cap.

V - FINAL OPERATION

- ❑ Remove the **coolant recovery tray**.
- ❑ Refit the engine undertray.
- ❑ Refit the front bumper (see **Front bumper assembly: Exploded view**) (55A, Exterior protection).

K4M

Special tooling required	
Mot. 1448	Remote operation pliers for hose clips.
Car. 1363	Set of trim removal levers.

IMPORTANT

When working in the engine compartment, take care as the radiator fan(s) may start up unexpectedly (risk of being cut).

To avoid any risk of serious burns when the engine is hot:

- do not open the expansion bottle cap,
- do not drain the cooling system,
- do not open the bleed screw(s).

WARNING

Prepare for the flow of fluid, and protect the surrounding components.

WARNING

When carrying out a repair that requires a complete change, it is essential to flush the circuit with clean water, blast compressed air through the circuit to drive out the water, fill and bleed the circuit and then measure the effective protection.

The criteria to be met are:

- protection down to **-25°C ± 2** for cold and temperate countries,
- protection down to **-40°C ± 2** for "extreme cold" countries.

REMOVAL

I - REMOVAL PREPARATION OPERATION

❑ Position the vehicle on a lift (see **Vehicle: Towing and lifting**) (02A, Lifting equipment).

❑ Disconnect the battery (see **Battery: Removal - Refitting**) (80A, Battery).

❑ Remove:

- the engine undertray,
- the front bumper (see **Front bumper assembly: Exploded view**) (55A, Exterior protection),
- the injector rail protector (see **13B**, **Diesel injection**, **Injector rail: Removal - Refitting**, page **13B-25**) ,
- the air resonator (see **12A**, **Fuel mixture**, **Air resonator: Removal - Refitting**, page **12A-2**) ,
- the fan assembly (see **19A**, **Cooling**, **Engine cooling fan assembly: Removal - Refitting**, page **19A-27**) .

❑ Drain the engine cooling system (see **19A**, **Cooling**, **Cooling system: Draining - Refilling**, page **19A-6**) .

II - REMOVAL OPERATION

AIR CONDITIONING

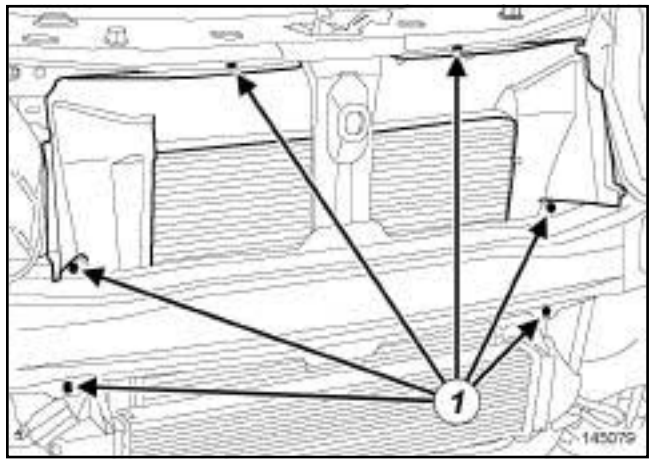

145079

❑ Remove:

- the air deflector mounting pins (**1**) ,
- the air deflector.

❑ Attach the condenser to the front impact cross member using a safety strap.

K4M

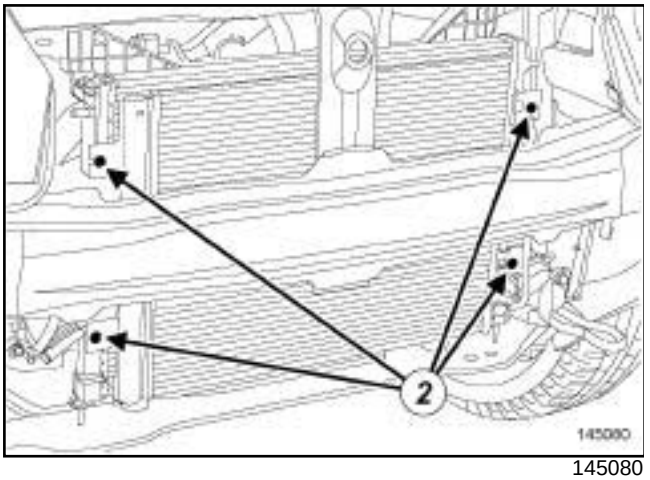

145080

❑ Remove the condenser bolts (**2**) .

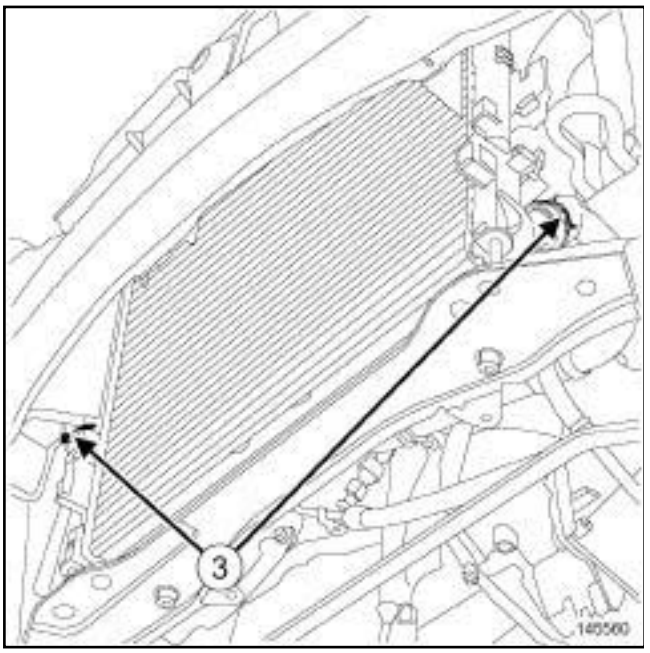

145560

❑ Remove the cooling radiator hose clips (**3**) using the tool **(Mot. 1448)**.

❑ Disconnect the cooling radiator hoses using the **(Car. 1363)**.

❑ Remove the engine cooling radiator from above the vehicle.

REFITTING

I - REFITTING PREPARATION OPERATION

❑ Always replace the cooling radiator hose clips.

II - REFITTING OPERATION

❑ Proceed in the reverse order to removal.

❑ Refill and bleed the cooling system (see **19A**, **Cooling**, **Cooling system: Draining - Refilling**, page **19A-6**) .

❑ Connect the battery (see **Battery: Removal - Refitting**) (80A, Battery).

K9K

Special tooling required	
Mot. 1448	Remote operation pliers for hose clips.
Car. 1363	Set of trim removal levers.

IMPORTANT

When working in the engine compartment, take care as the radiator fan(s) may start up unexpectedly (risk of being cut).

To avoid any risk of serious burns when the engine is hot:

- do not open the expansion bottle cap,
- do not drain the cooling system,
- do not open the bleed screw(s).

WARNING

Prepare for the flow of fluid, and protect the surrounding components.

WARNING

When carrying out a repair that requires a complete change, it is essential to flush the circuit with clean water, blast compressed air through the circuit to drive out the water, fill and bleed the circuit and then measure the effective protection.

The criteria to be met are:

- protection down to **-25°C ± 2** for cold and temperate countries,
- protection down to **-40°C ± 2** for "extreme cold" countries.

REMOVAL

I - REMOVAL PREPARATION OPERATION

❑ Position the vehicle on a lift (see **Vehicle: Towing and lifting**) (02A, Lifting equipment).

❑ Disconnect the battery (see **Battery: Removal - Refitting**) (80A, Battery).

❑ Remove:

- the engine undertray,
- the front bumper (see **Front bumper assembly: Exploded view**) (55A, Exterior protection),
- the engine cover,
- the air intake sleeve,
- the intercooler (see **12B**, **Turbocharging**, **Intercooler: Removal - Refitting**, page **12B-8**) ,
- the fan assembly (see **19A**, **Cooling**, **Engine cooling fan assembly: Removal - Refitting**, page **19A-27**) .

❑ Drain the engine cooling system (see **19A**, **Cooling**, **Cooling system: Draining - Refilling**, page **19A-6**) .

II - REMOVAL OPERATION

AIR CONDITIONING

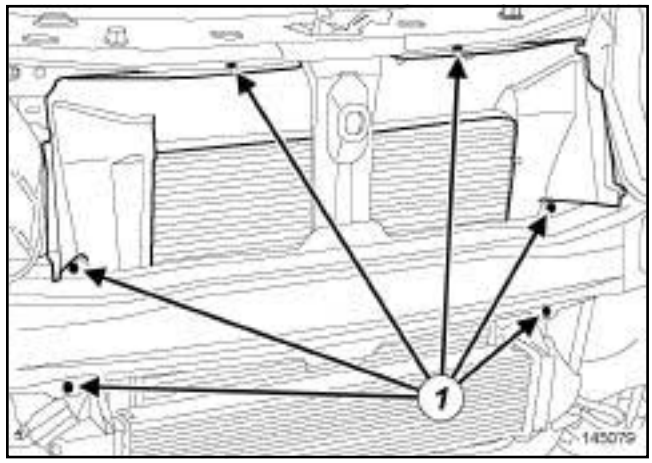

145079

❑ Remove:

- the air deflector mounting pins (**1**) ,
- the air deflector.

❑ Attach the condenser to the front impact cross member using a safety strap.

K9K

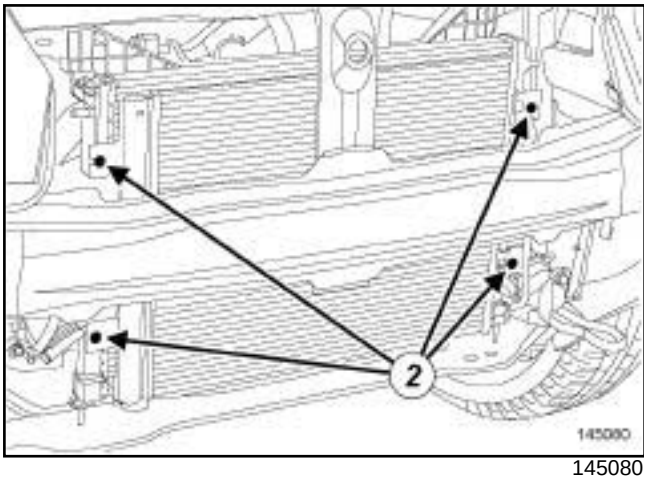

145080

❑ Remove the condenser bolts (**2**) .

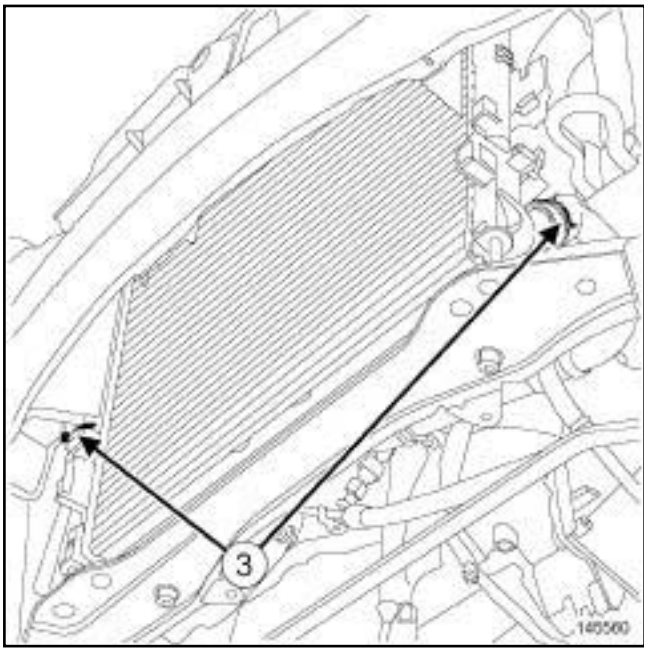

145560

❑ Remove the cooling radiator hose clips (**3**) using the tool **(Mot. 1448)**.

❑ Disconnect the cooling radiator hoses using the **(Car. 1363)**.

❑ Remove the engine cooling radiator from above the vehicle.

REFITTING

I - REFITTING PREPARATION OPERATION

❑ Always replace the cooling radiator hose clips.

II - REFITTING OPERATION

❑ Proceed in the reverse order to removal.

❑ Refill and bleed the cooling system (see **19A**, **Cooling**, **Cooling system: Draining - Refilling**, page **19A-6**) .

❑ Connect the battery (see **Battery: Removal - Refitting**) (80A, Battery).

K9K, and 796

Tightening torques ▽	
bolts of the coolant pump	**10 N.m**
inner timing cover bolts	**9 N.m**
alternator bolts	**21 N.m**

IMPORTANT
Wear leaktight gloves (Nitrile type) for this operation.

IMPORTANT
Wear heat protective gloves during the operation.

IMPORTANT
The circuits are designed to be pressurised, so be careful at high temperatures (risk of serious burns).

Do not remove the cap from the expansion bottle while the engine is hot.

Take care when carrying out a repair under the bonnet, as the radiator fan(s) may start to operate without warning.

Do not open the bleed screw(s) with the engine running.

WARNING
Prepare for the flow of fluid, and protect the surrounding components.

REMOVAL

I - REMOVAL PREPARATION OPERATION

❏ Position the vehicle on a two-post lift (see **Vehicle: Towing and lifting**) (02A, Lifting equipment).

❏ Disconnect the battery (see **Battery: Removal - Refitting**) (80A, Battery).

❏ Remove:

- the engine cover,
- the engine undertray bolts,
- the engine undertray.

❏ Remove the front bumper (see **Front bumper: Removal - Refitting**) (55A, Exterior protection).

❏ Drain the cooling system (see **19A**, **Cooling**, **Cooling system: Draining - Refilling**, page **19A-6**) .

❏ Remove:

- the accessories belt (see **11A**, **Top and front of engine**, **Accessories belt: Removal - Refitting**, page **11A-2**) ,
- the timing belt (see **11A**, **Top and front of engine**, **Timing belt: Removal - Refitting**, page **11A-17**) .

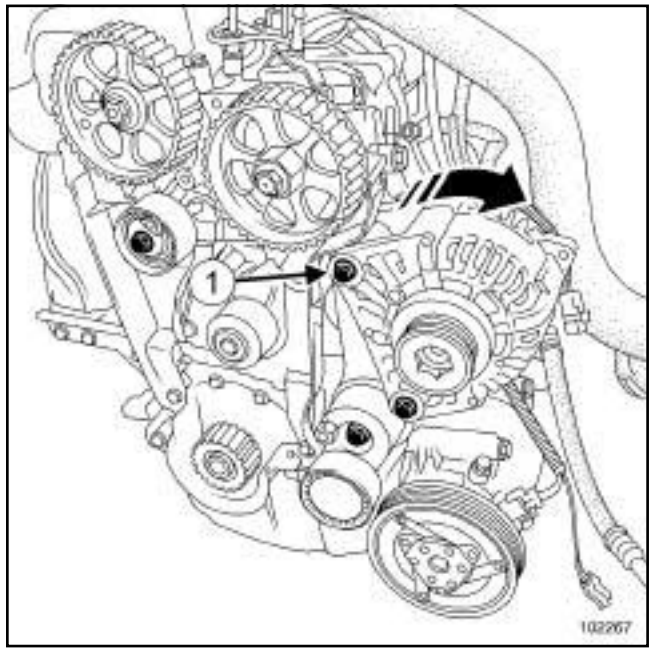

102267

❏ Disconnect the electrical connections from the alternator.

❏ Remove the alternator upper bolt (**1**) .

❏ Loosen the alternator lower bolt.

❏ Tilt the alternator forward.

K9K, and 796

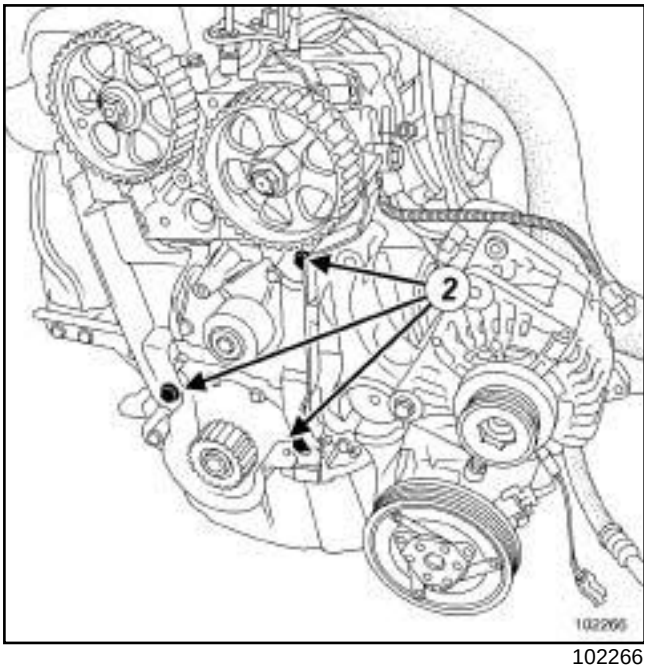

102266

❑ Remove:

- the inner timing cover bolts (**2**) ,
- the inner timing cover.

II - REMOVAL OPERATION

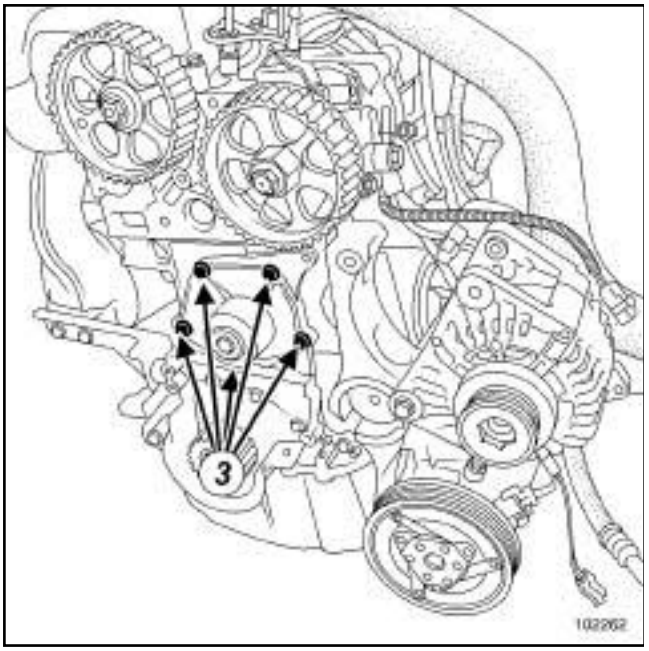

102262

❑ Remove:

- the coolant pump bolts (**3**) ,
- the coolant pump,
- the coolant pump seal.

REFITTING

I - REFITTING PREPARATION OPERATION

❑ **parts always to be replaced: coolant pump seal**.

❑ Use **SURFACE CLEANER** (see) (04B, Consumables - Products) to clean and degrease:

- the coolant pump sealing face if it is to be reused,
- the cylinder block gasket face.

> **WARNING**
> Do not scrape the joint faces of the aluminium, any damage caused to the joint face will result in a risk of leaks.

> **WARNING**
> To ensure proper sealing, the gasket surfaces must be clean, dry and not greasy (avoid any finger marks).

❑ Apply **SUPER CLEANER FOR JOINT FACES** (see **Vehicle: Parts and consumables for the repair**) (04B, Consumables - Products) to the areas to be cleaned.

❑ Leave for approximately ten minutes.

❑ Remove the residue using a wooden spatula.

❑ Complete the cleaning of the parts using an abrasive pad.

> **WARNING**
> To ensure proper sealing, the gasket surfaces must be clean, dry and not greasy (avoid any finger marks).

❑ Use **SURFACE CLEANER** (see **Vehicle: Parts and consumables for the repair**) (04B, Consumables - Products) to degrease the joint faces.

❑ Always replace the coolant pump seal.

K9K, and 796

II - REFITTING OPERATION

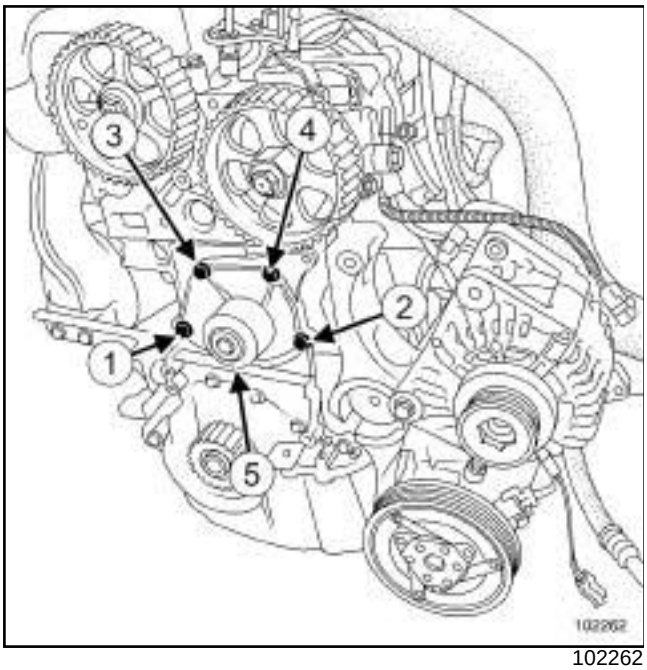

102262

- ❑ Refit:
  - the coolant pump fitted with a new seal,
  - the coolant pump bolts.
- ❑ Torque tighten in order **(1) (2) (3) (4) (5)** the **bolts of the coolant pump (10 N.m)**.
- ❑ Apply one or two drops of FRENETANCHE (see **Vehicle: Parts and consumables for the repair**) (04B, Consumables - Products) to the coolant pump bolts.

III - FINAL OPERATION

- ❑ Refit the inner timing cover.
- ❑ Tighten to torque the **inner timing cover bolts (9 N.m)**.
- ❑ Refit the alternator.
- ❑ Torque tighten the **alternator bolts (21 N.m)**.
- ❑ Connect the alternator electrical connections.
- ❑ Refit:
  - the timing belt (see **11A**, **Top and front of engine**, **Timing belt: Removal - Refitting**, page **11A-17**) ,
  - the accessories belt (see **11A**, **Top and front of engine**, **Accessories belt: Removal - Refitting**, page **11A-2**) .
- ❑ Fill the cooling system (see **19A**, **Cooling**, **Cooling system: Draining - Refilling**, page **19A-6**) .
- ❑ Refit the front bumper (see **Front bumper: Removal - Refitting**) (55A, Exterior protection).
- ❑ Refit:
  - the engine undertray,
  - the engine undertray bolts,
  - the engine cover.
- ❑ Connect the battery (see **Battery: Removal - Refitting**) (80A, Battery).
- ❑ Bleed the cooling system (see **19A**, **Cooling**, **Cooling system: Draining - Refilling**, page **19A-6**) .

K4M

Tightening torques ▽	
coolant pump M8 bolt	**27 N.m**
coolant pump M6 bolts	**10 N.m**

IMPORTANT

When working in the engine compartment, take care as the radiator fan(s) may start up unexpectedly (risk of being cut).

To avoid any risk of serious burns when the engine is hot:

- do not open the expansion bottle cap,
- do not drain the cooling system,
- do not open the bleed screw(s).

WARNING

Prepare for the flow of fluid, and protect the surrounding components.

WARNING

When carrying out a repair that requires a complete change, it is essential to flush the circuit with clean water, blast compressed air through the circuit to drive out the water, fill and bleed the circuit and then measure the effective protection.

The criteria to be met are:

- protection down to **-25°C ± 2** for cold and temperate countries,
- protection down to **-40°C ± 2** for "extreme cold" countries.

REMOVAL

I - REMOVAL PREPARATION OPERATION

❑ Position the vehicle on a two-post lift (see **Vehicle: Towing and lifting**) (02A, Lifting equipment).

❑ Disconnect the battery (see **Battery: Removal - Refitting**) (80A, Battery).

❑ Remove:

- the front right-hand wheel (see **Wheel: Removal - Refitting**) (35A, Wheels and tyres),
- the accessories belt (see **11A**, **Top and front of engine**, **Accessories belt: Removal - Refitting**, page **11A-2**) ,
- the timing belt (see **11A**, **Top and front of engine**, **Timing belt: Removal - Refitting**, page **11A-17**) .

❑ Drain the cooling system (see **19A**, **Cooling**, **Cooling system: Draining - Refilling**, page **19A-6**) .

II - REMOVAL OPERATION

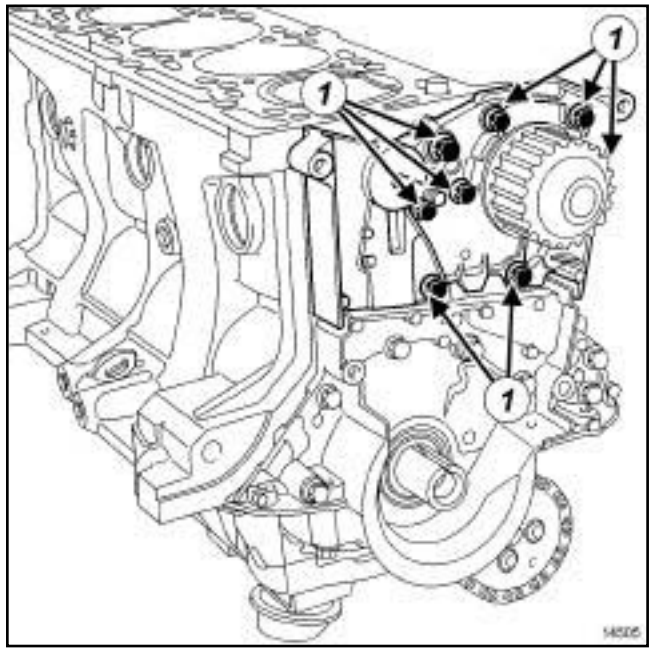

14505

❑ Remove:

- the coolant pump bolts (**1**) ,
- the coolant pump.

K4M

REFITTING

I - REFITTING PREPARATION OPERATION

❑

IMPORTANT
Wear leaktight gloves (Nitrile type) for this operation.

IMPORTANT
Wear goggles with side protectors for this operation.

WARNING
Do not scrape the joint faces of the aluminium, any damage caused to the joint face will result in a risk of leaks.

❑ Use **SUPER CLEANING AGENT FOR JOINT FACES** (see **Vehicle: Parts and consumables for the repair**) (04B, Consumables - Products) to clean:

- the coolant pump sealing face if it is to be reused,
- the cylinder block gasket face.

❑ Apply the product to the surfaces to be cleaned.

❑ Leave for approximately ten minutes.

❑ Remove the residue using a wooden spatula.

❑ Complete the cleaning of the parts using an abrasive pad.

WARNING
To ensure proper sealing, the gasket surfaces must be clean, dry and not greasy (avoid any finger marks).

❑ Use **SURFACE CLEANER** (see **Vehicle: Parts and consumables for the repair**) (04B, Consumables - Products) to degrease the joint faces.

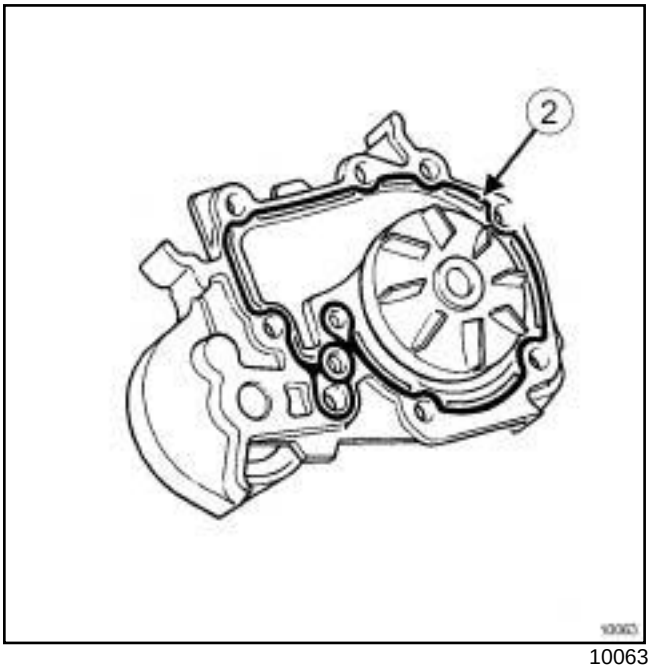

10063

❑

WARNING
Applying excess sealant could cause it to be squeezed out when parts are tightened. A mixture of sealant and fluid could damage certain components (engine, radiator, etc.).

❑ Apply at (**2**) a bead of **RESIN ADHESIVE** (see **Vehicle: Parts and consumables for the repair**) (04B, Consumables - Products) **0.6** to **1 mm** wide.

K4M

II - REFITTING OPERATION

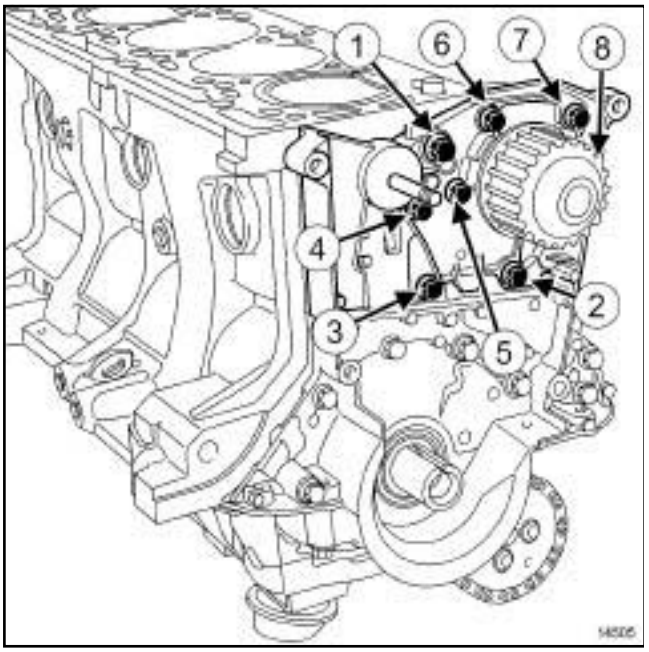

14505

- Apply one to two drops of **FRENETANCHE** (see **Vehicle: Parts and consumables for the repair**) (04B, Consumables - Products) to the coolant pump bolts (**1**) and (**4**) .
- Refit the coolant pump.
- Fit the coolant pump bolts in order until contact is made.
- Torque tighten in order:
  - the **coolant pump M8 bolt (27 N.m)** (**1**) .
  - the **coolant pump M6 bolts (10 N.m)** (**2**) to (**8**) .

III - FINAL OPERATION

- Refit:
  - the timing belt (see **11A**, **Top and front of engine**, **Timing belt: Removal - Refitting**, page **11A-17**) ,
  - the accessories belt (see **11A**, **Top and front of engine**, **Accessories belt: Removal - Refitting**, page **11A-2**) ,
  - the front right-hand wheel (see **Wheel: Removal - Refitting**) (35A, Wheels and tyres).
- Fill the cooling system (see **19A**, **Cooling**, **Cooling system: Draining - Refilling**, page **19A-6**) .
- Connect the battery (see **Battery: Removal - Refitting**) (80A, Battery).
- Bleed the cooling system (see **19A**, **Cooling**, **Cooling system: Draining - Refilling**, page **19A-6**) .

Thermostat: Removal - Refitting

K9K

- The thermostat is integral with the coolant outlet unit. The coolant outlet unit must be replaced to replace it (see **19A**, **Cooling**, **Water chamber: Removal - Refitting**, page **19A-22**) .

K4M

Special tooling required	
Mot. 1448	Remote operation pliers for hose clips.

IMPORTANT

When working in the engine compartment, take care as the radiator fan(s) may start up unexpectedly (risk of being cut).

To avoid any risk of serious burns when the engine is hot:

- do not open the expansion bottle cap,
- do not drain the cooling system,
- do not open the bleed screw(s).

REMOVAL

I - REMOVAL PREPARATION OPERATION

❑ Position the vehicle on a two-post lift (see **Vehicle: Towing and lifting**) (02A, Lifting equipment).

❑ Remove:

- the air resonator (see **12A**, **Fuel mixture**, **Air resonator: Removal - Refitting**, page **12A-2**) ,
- the engine undertray bolts,
- the engine undertray.

❑ Drain the cooling system (see **19A**, **Cooling**, **Cooling system: Draining - Refilling**, page **19A-6**) .

II - OPERATION FOR REMOVAL OF PART CONCERNED

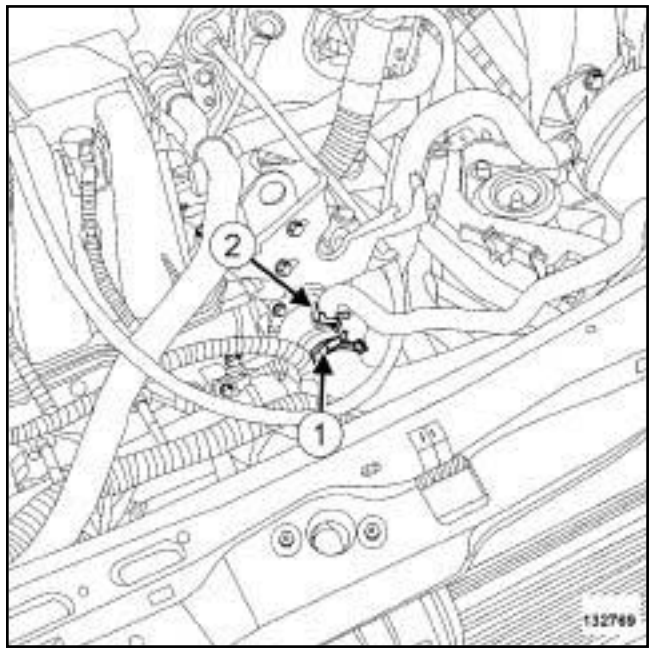

132769

❑ Using the **(Mot. 1448)** ororremove:

- the cooling radiator top hose clip (**1**) ,
- the clip (**2**) from the expansion bottle hose.

❑ Disconnect from the thermostat cover:

- the cooling radiator top hose,
- the expansion bottle hose.

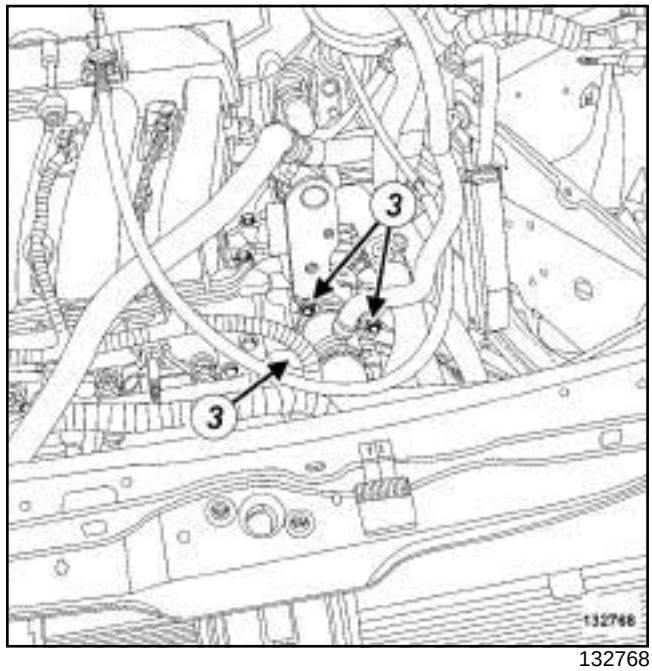

132768

❑ Remove:

- the thermostat cover bolts (**3**) ,

K4M

- the thermostat cover.

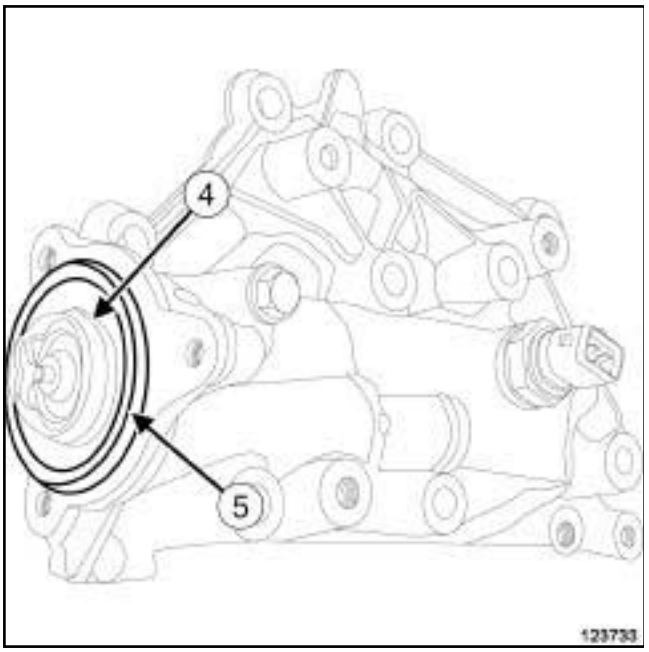

123733

❑ Remove:

- the thermostat (**4**) ,
- the thermostat seal (**5**) .

REFITTING

I - REFITTING PREPARATION OPERATION

❑ Use **SURFACE CLEANER** (see **Vehicle: Parts and consumables for the repair**) (04B, Consumables - Products) to clean and degrease the thermostat housing.

❑ The thermostat seal must be replaced.

II - REFITTING OPERATION FOR PART CONCERNED

❑ Refit:

- a new seal on the thermostat,
- the thermostat,
- the thermostat cover.

❑ Connect the following to the thermostat cover:

- the expansion bottle hose,
- the cooling radiator top hose.

❑ Using the **(Mot. 1448)** ororfit:

- the expansion bottle hose clip,
- the cooling radiator top hose clip.

III - FINAL OPERATION

❑ Fill and bleed the cooling system (see **19A**, **Cooling**, **Cooling system: Draining - Refilling**, page **19A-6**) .

❑ Refit:

- the engine undertray,
- the air resonator (see **12A**, **Fuel mixture**, **Air resonator: Removal - Refitting**, page **12A-2**) .

K9K, and 796

Tightening torques ▽	
water chamber bolts	**11 N.m**
expansion bottle nuts	**8 N.m**

IMPORTANT
Wear leaktight gloves (Nitrile type) for this operation.

IMPORTANT
The circuits are designed to be pressurised, so be careful at high temperatures (risk of serious burns).

Do not remove the cap from the expansion bottle while the engine is hot.

Take care when carrying out a repair under the bonnet, as the radiator fan(s) may start to operate without warning.

Do not open the bleed screw(s) with the engine running.

WARNING
Prepare for the flow of fluid, and protect the surrounding components.

REMOVAL

I - REMOVAL PREPARATION OPERATION

❏ Position the vehicle on a two-post lift (see **Vehicle: Towing and lifting**) (02A, Lifting equipment).

❏ Remove:

- the engine cover,
- the engine undertray bolts,
- the engine undertray.

❏ Remove the front bumper (see **Front bumper: Removal - Refitting**) (55A, Exterior protection).

❏ Drain the cooling system (see **19A**, **Cooling**, **Cooling system: Draining - Refilling**, page **19A-6**) .

❏ Remove:

- the air filter unit (see **12A**, **Fuel mixture**, **Air filter unit: Removal - Refitting**, page **12A-6**) ,
- the expansion bottle nuts.

❏ Move aside the expansion bottle.

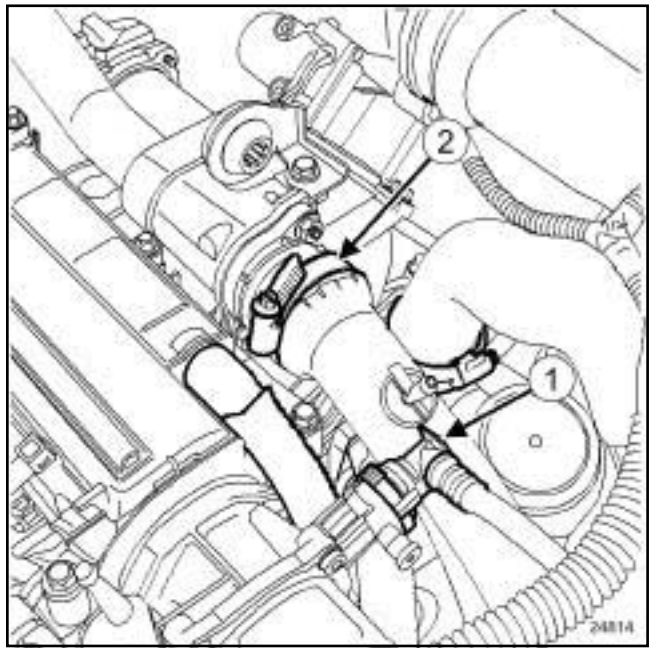

24814

❏ Disconnect:

- the union (**1**) on the vacuum pump,
- the air duct between the intercooler and the EGR assembly at (**2**) .

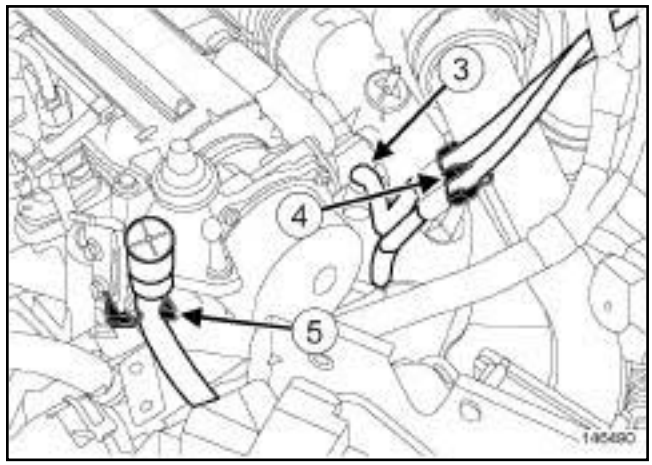

146490

❏ Disconnect the EGR solenoid valve pipe at (**3**) .

❏ Unclip:

- the EGR solenoid valve pipes at (**4**) ,
- the gearbox breather pipe at (**5**) .

❏ Move aside the air duct between the intercooler and the EGR assembly.

K9K, and 796

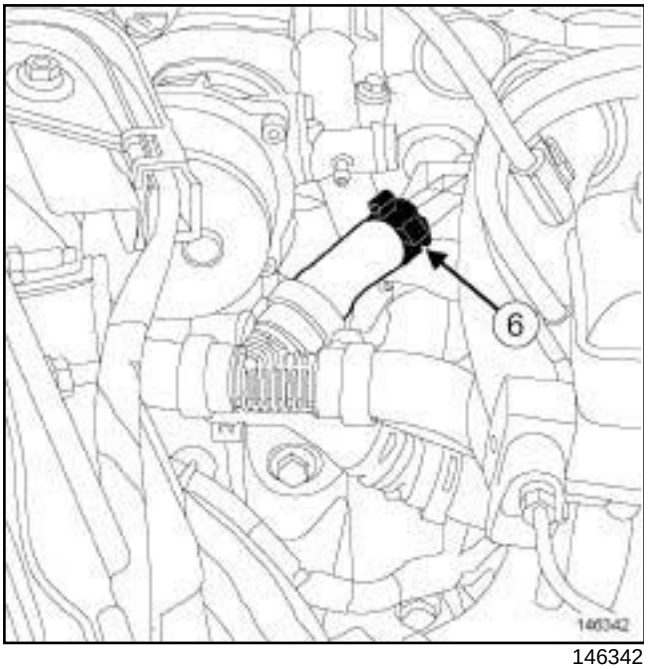

146342

- ❑ Disconnect the EGR assembly outlet pipe at (**6**) .
- ❑ Move the EGR assembly outlet pipe aside.
- ❑ Disconnect the coolant temperature sensor connector.

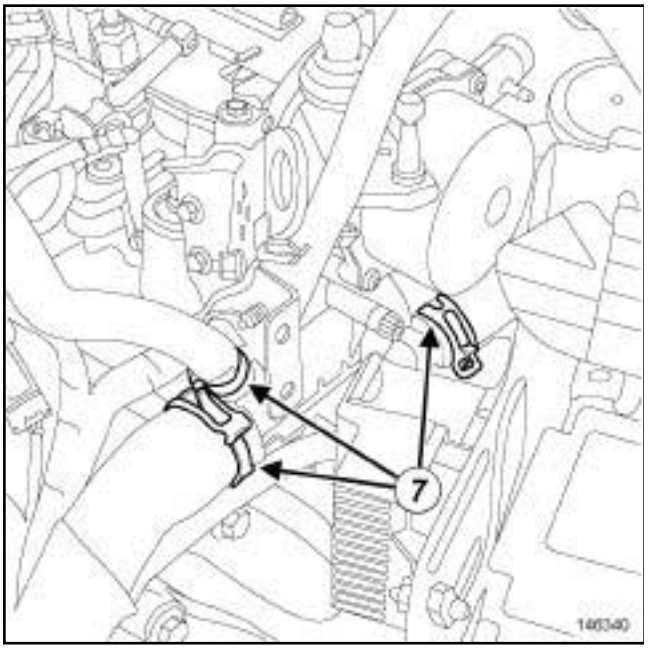

146340

- ❑ Disconnect the cooling hoses on the water chamber at (**7**) .

II - REMOVAL OPERATION

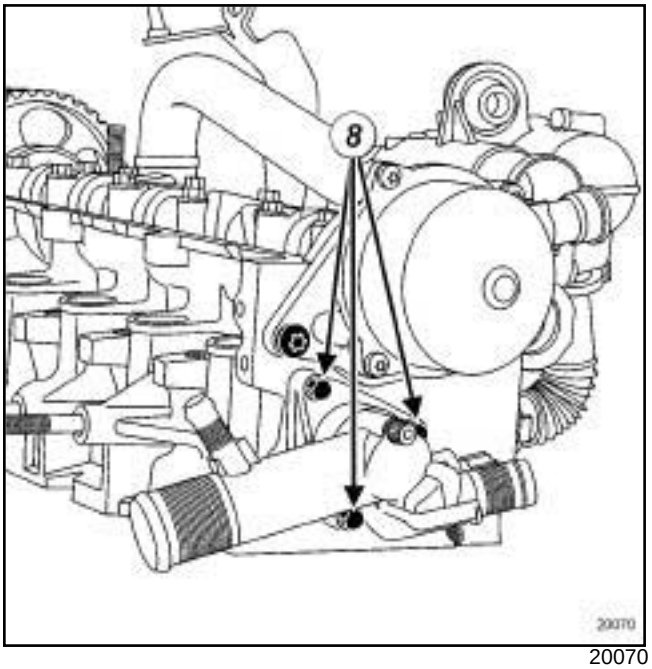

20070

- ❑ Remove:
  - the water chamber bolts (**8**) ,
  - the water chamber,
  - the water chamber seal.

REFITTING

I - REFITTING PREPARATION OPERATION

- ❑ **parts always to be replaced: Cylinder head coolant outlet unit seal**.
- ❑ Use **SURFACE CLEANER** (see) to clean and degrease:
  - the cylinder head joint face,
  - the water chamber seal housing if it is to be reused.

> **WARNING**
> To ensure proper sealing, the gasket surfaces must be clean, dry and not greasy (avoid any finger marks).

> **WARNING**
> Do not scrape the joint faces of the aluminium, any damage caused to the joint face will result in a risk of leaks.

K9K, and 796

II - REFITTING OPERATION

❑ Refit:

- a new water chamber seal in the water chamber housing,
- the water chamber.

❑ Torque tighten the **water chamber bolts (11 N.m)**.

❑ Connect:

- the cooling hoses to the water chamber,
- the coolant temperature sensor connector,
- the EGR assembly outlet pipe,

❑ Position the air duct between the intercooler and the EGR assembly.

❑ Connect:

- the air duct on the EGR assembly,
- the union to the vacuum pump.

❑ Connect the EGR solenoid valve pipe to the vacuum pump.

❑ Clip on:

- the breather pipe from the gearbox,
- the EGR solenoid valve pipes.

❑ Position the expansion bottle.

❑ Torque tighten the **expansion bottle nuts (8 N.m)**.

III - FINAL OPERATION

❑ Refit the front bumper (see **Front bumper: Removal - Refitting**) (55A, Exterior protection).

❑ Refit:

- the air filter unit (see **12A**, **Fuel mixture**, **Air filter unit: Removal - Refitting**, page **12A-6**) ,
- the engine undertray,
- the engine cover.

❑ Fill and bleed the cooling system (see **19A**, **Cooling**, **Cooling system: Draining - Refilling**, page **19A-6**) .

K4M

Tightening torques ▽	
coolant outlet unit bolts (initial torque)	**4 N.m**
water chamber bolts	**12 N.m**

REMOVAL

I - OPERATION FOR REMOVAL OF PART CONCERNED

❑ Position the vehicle on a two-post lift (see **Vehicle: Towing and lifting**) (02A, Lifting equipment).

❑ Disconnect the battery (see **Battery: Removal - Refitting**) (80A, Battery).

❑ Remove the air resonator (see **12A**, **Fuel mixture**, **Air resonator: Removal - Refitting**, page **12A-2**) .

❑ Drain the cooling system (see **19A**, **Cooling**, **Cooling system: Draining - Refilling**, page **19A-6**) .

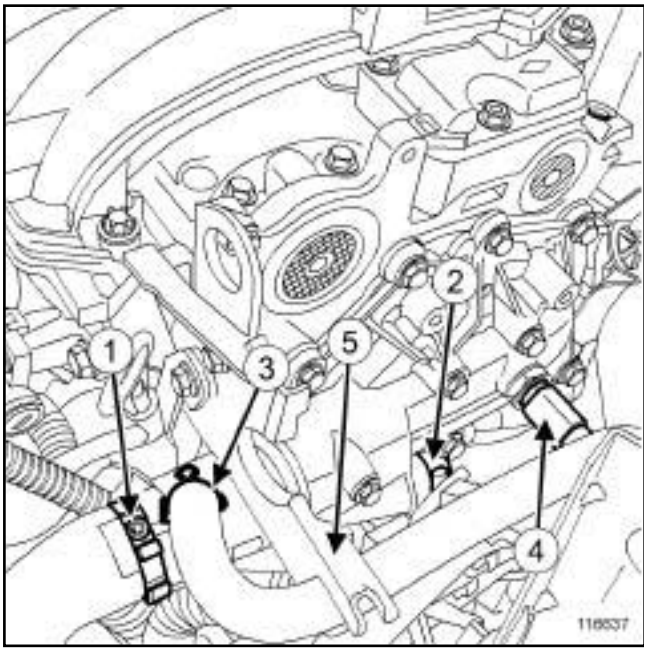

116637

❑ Disconnect:

- the radiator top hose (**1**) from the water chamber,
- the passenger compartment heater hose (**2**) ,
- the expansion bottle hose (**3**) ,
- the coolant temperature sensor (**4**) .

❑ Unclip the hoses from their support at (**5**) .

II - REMOVAL OPERATION

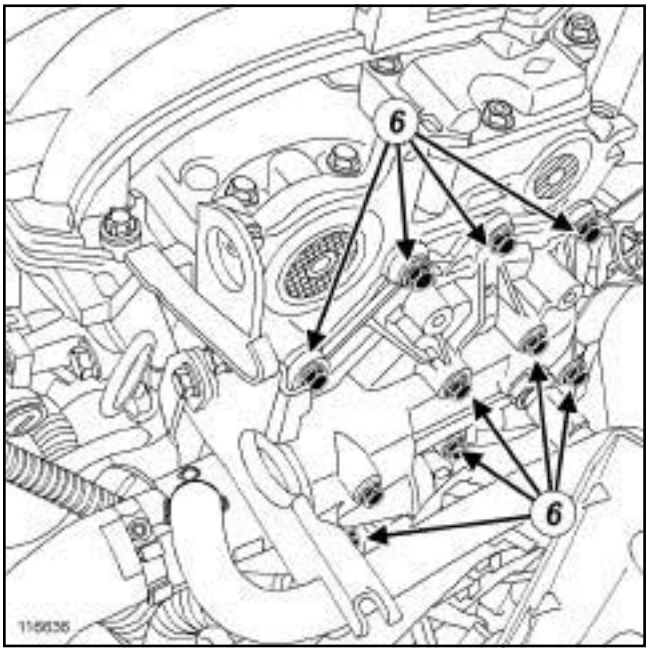

116636

❑ Remove:

- the water chamber bolts (**6**) ,
- the water chamber.

REFITTING

I - REFITTING PREPARATION OPERATION

❑ **parts always to be replaced: Cylinder head coolant outlet unit seal**

> **WARNING**
> To ensure proper sealing, the gasket surfaces must be clean, dry and not greasy (avoid any finger marks).

❑ Use **SURFACE CLEANER** (see **Vehicle: Parts and consumables for the repair**) (04B, Consumables - Products) to clean and degrease:

- the cylinder head joint face,
- the water chamber joint face, if being reused.

II - REFITTING OPERATION

❑ Refit the water chamber.

K4M

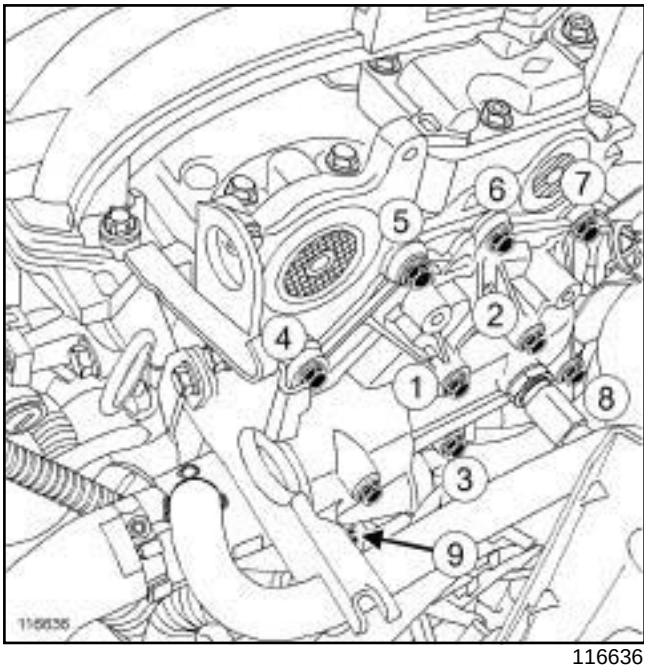

116636

- Screw on the water chamber bolts without tightening them.
- Torque tighten in order:
  - the **coolant outlet unit bolts (initial torque) (4 N.m)**,
  - the **water chamber bolts (12 N.m)**.

III - FINAL OPERATION

- Connect:
  - the coolant temperature sensor,
  - the expansion bottle hose,
  - the passenger compartment heater hose,
  - the top hose to the water chamber.
- Refit the air resonator (see **12A**, **Fuel mixture**, **Air resonator: Removal - Refitting**, page **12A-2**) .
- Fill the cooling system (see **19A**, **Cooling**, **Cooling system: Draining - Refilling**, page **19A-6**) .
- Connect the battery (see **Battery: Removal - Refitting**) (80A, Battery).
- Bleed the cooling system (see **19A**, **Cooling**, **Cooling system: Draining - Refilling**, page **19A-6**) .

K4M

REMOVAL

I - REMOVAL PREPARATION OPERATION

❑ Disconnect the battery (see **Battery: Removal - Refitting**) (80A, Battery).

❑ Remove:

- the injector rail protector (see **13B**, **Diesel injection**, **Injector rail: Removal - Refitting**, page **13B-25**) ,
- the air resonator (see **12A**, **Fuel mixture**, **Air resonator: Removal - Refitting**, page **12A-2**) .

II - REMOVAL OPERATION

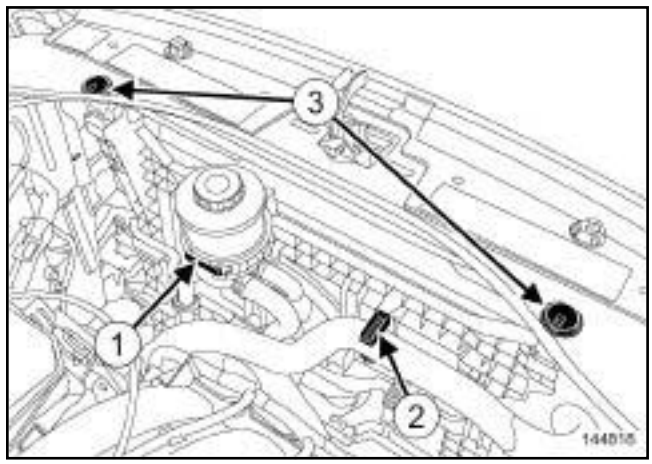

144818

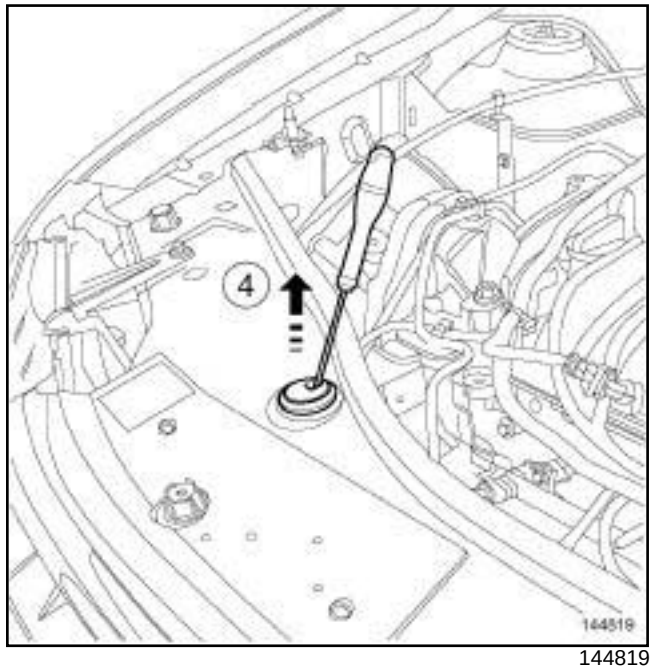

144819

❑ Unclip:

- the power-assisted steering hoses on the fan assembly,
- the power-assisted steering fluid reservoir from its support at (**1**) ,
- the engine coolant hose at (**2**) .

❑ Press on the clips of the centring pins (**3**) on the engine cooling fan assembly using a screwdriver and pull them according to the direction of the arrow (**4**) .

❑ Secure the power-assisted steering fluid reservoir to the engine.

❑ Remove the power assisted steering fluid reservoir bracket.

K4M

STANDARD HEATING RECIRCULATION

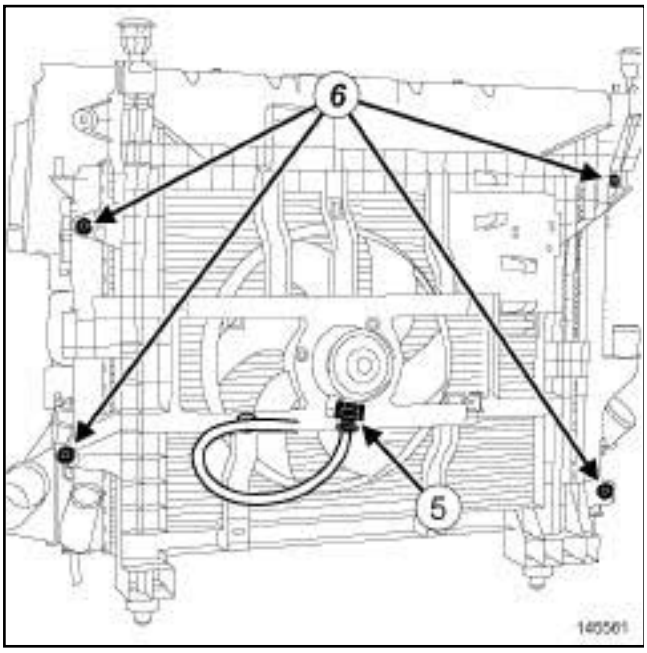

145561

- ❑ Disconnect the cooling fan assembly connector (**5**) .
- ❑ Unclip the engine cooling fan assembly wiring.
- ❑ Move aside the wiring of the engine cooling fan assembly.
- ❑ Remove the engine cooling radiator bolts (**6**) .

AIR CONDITIONING

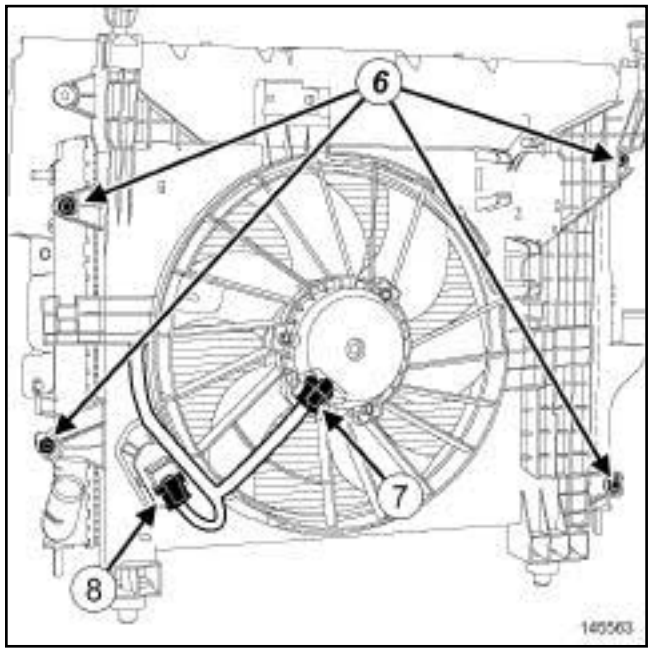

145563

- ❑ Disconnect:
  - the engine cooling fan assembly connector (**7**) ,
  - the engine cooling fan assembly resistor connector (**8**) .
- ❑ Unclip the engine cooling fan assembly wiring.
- ❑ Move aside the wiring of the engine cooling fan assembly.
- ❑ Remove the engine cooling radiator bolts (**6**) .

K4M

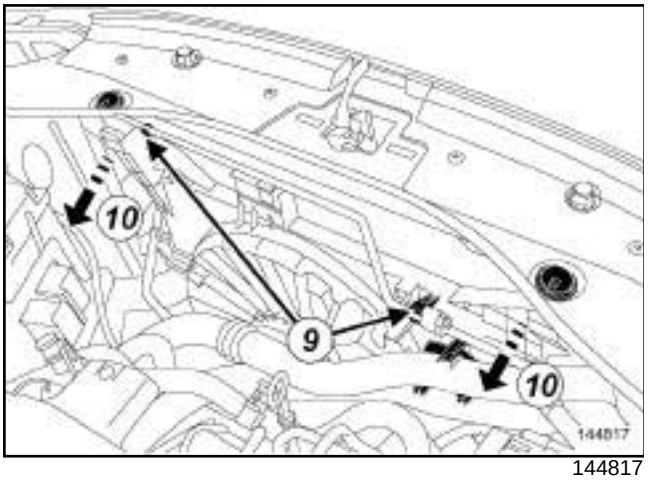

144817

❑ Unclip the « condenser - expansion valve » connecting pipe at (**9**) .

> **WARNING**
> In order to avoid any refrigerant leaks, do not damage (deform, twist, etc.) the pipe.

❑ Pull the fan assembly according to the arrows (**10**) passing it under the «condenser - expansion valve » connecting pipe.

❑

> Note:
> Do not damage the cooling unit vanes (radiator, condenser, etc.) during handling.

❑ Remove the engine cooling fan assembly from above the vehicle.

In the event of replacement

❑ Remove from the fan assembly:

- the power-assisted steering hose clips,
- the wiring clip.

REFITTING

I - REFITTING PREPARATION OPERATION

In the event of replacement

❑ Refit on the fan assembly:

- the power-assisted steering hose clips,
- the wiring clip.

II - REFITTING OPERATION

❑ Proceed in the reverse order to removal.

❑ Connect the battery (see **Battery: Removal - Refitting**) (80A, Battery).

III - CHECKING THE OPERATION OF THE FAN UNIT

❑ Start the engine.

❑ Disconnect the coolant temperature sensor connector.

❑ Check the operation of the fan assembly.

❑ Connect the coolant temperature sensor connector.

❑ Switch off the engine.

K9K

REMOVAL

I - REMOVAL PREPARATION OPERATION

❑ Position the vehicle on a two-post lift (see **Vehicle: Towing and lifting**) (02A, Lifting equipment).

❑ Disconnect the battery (see **Battery: Removal - Refitting**) (80A, Battery).

❑ Remove:

- the engine cover,
- the air intake sleeve,
- the front bumper (see **Front bumper assembly: Exploded view**) (55A, Exterior protection).

STANDARD HEATING RECIRCULATION

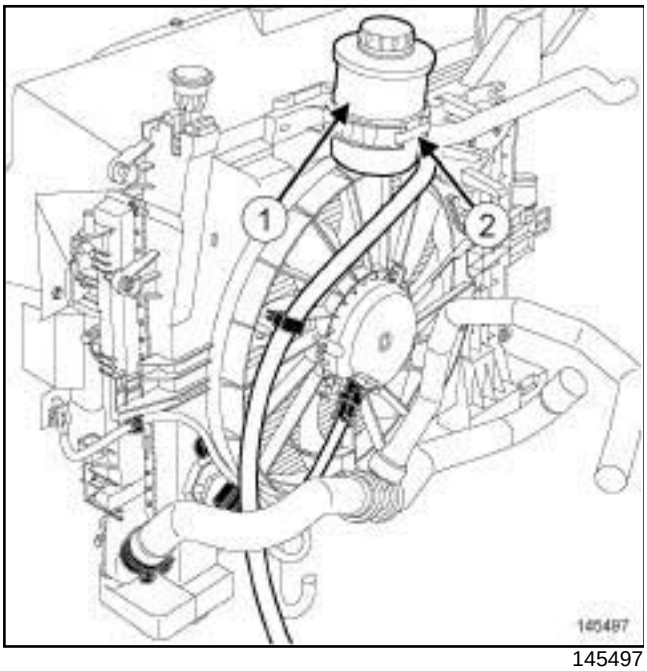

145497

❑ Unclip:

- the power-assisted steering hoses on the fan assembly,
- the power-assisted steering fluid reservoir (**1**) from its support at (**2**) .

❑ Secure the power-assisted steering fluid reservoir to the engine.

❑ Remove the power assisted steering fluid reservoir bracket.

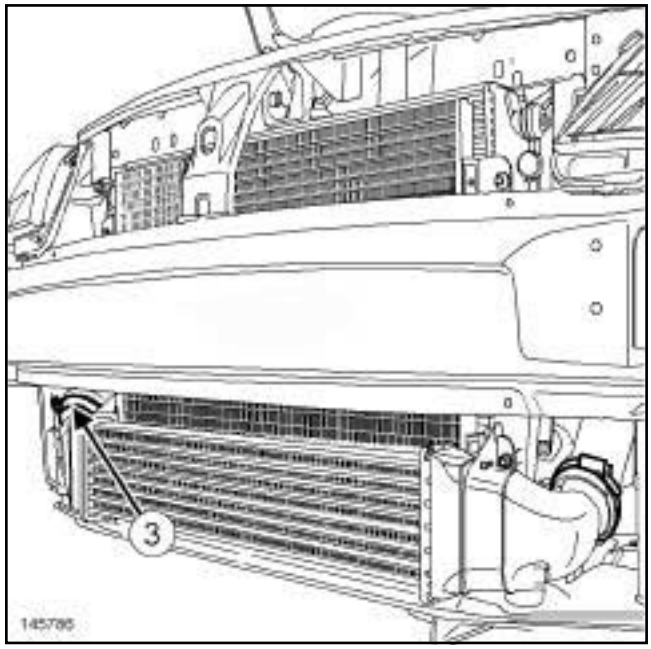

145786

❑ Disconnect the intercooler duct at (**3**) .

K9K

II - REMOVAL OPERATION

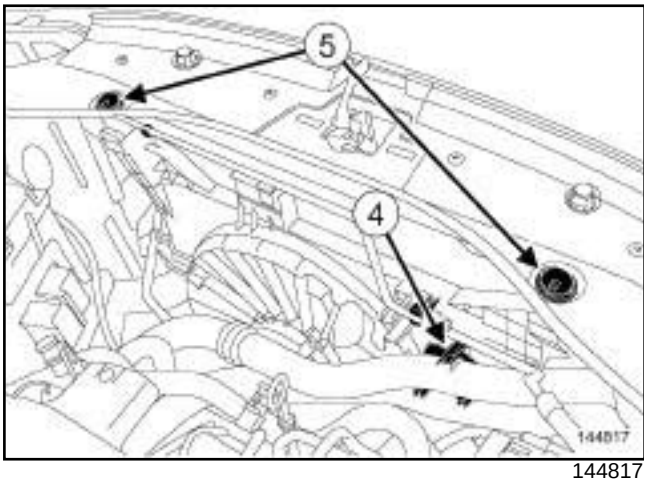

144817

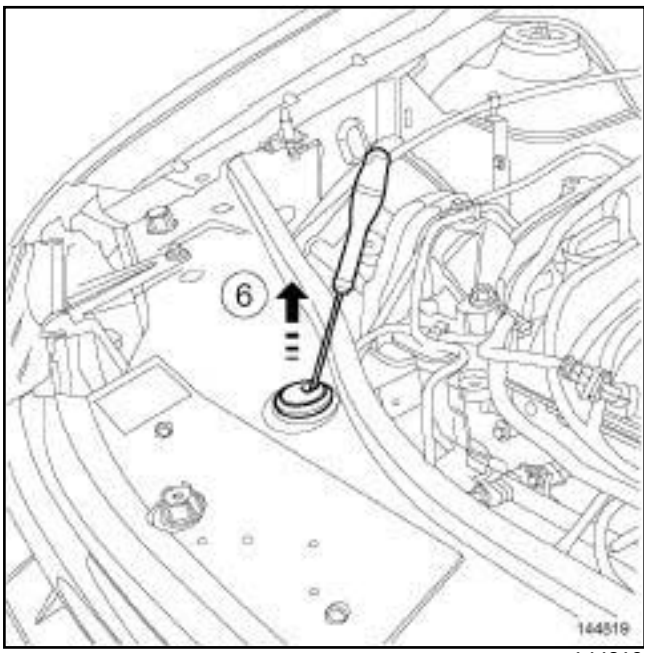

144819

- ❑ Unclip the following from the support (**4**) :
  - the intercooler duct on the fan assembly,
  - the engine coolant hose.
- ❑ Press on the clips of the centring pins (**5**) on the engine cooling fan assembly using a screwdriver and pull them according to the direction of the arrow (**6**) .

STANDARD HEATING RECIRCULATION

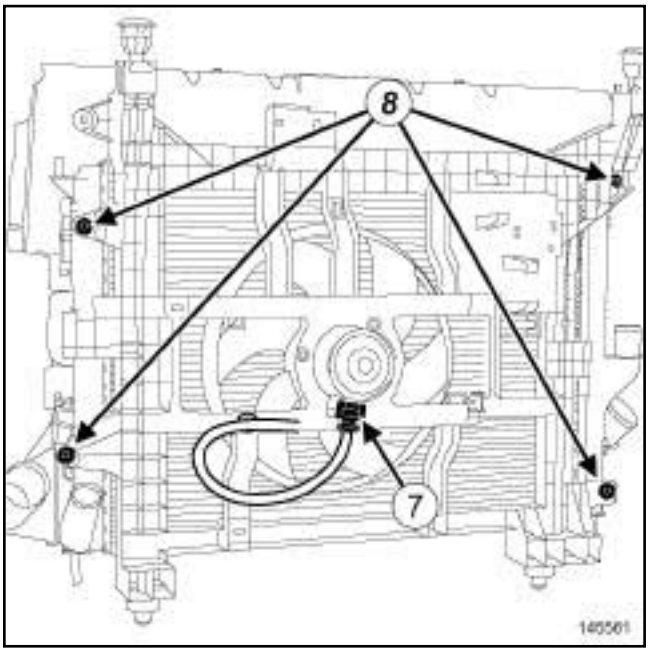

145561

- ❑ Disconnect the cooling fan assembly connector (**7**) .
- ❑ Unclip the engine cooling fan assembly wiring.
- ❑ Move aside the wiring of the engine cooling fan assembly.
- ❑ Remove the engine cooling radiator bolts (**8**) .

K9K

AIR CONDITIONING

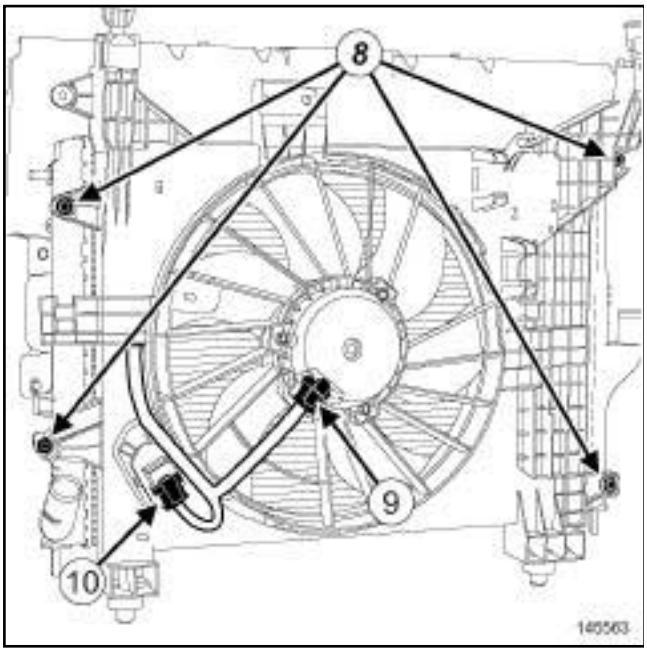

145563

❑ Disconnect:

- the engine cooling fan assembly connector (**9**) ,
- the engine cooling fan assembly resistor connector (**10**) .

❑ Unclip the engine cooling fan assembly wiring.

❑ Move aside the wiring of the engine cooling fan assembly.

❑ Remove the engine cooling radiator bolts (**8**) .

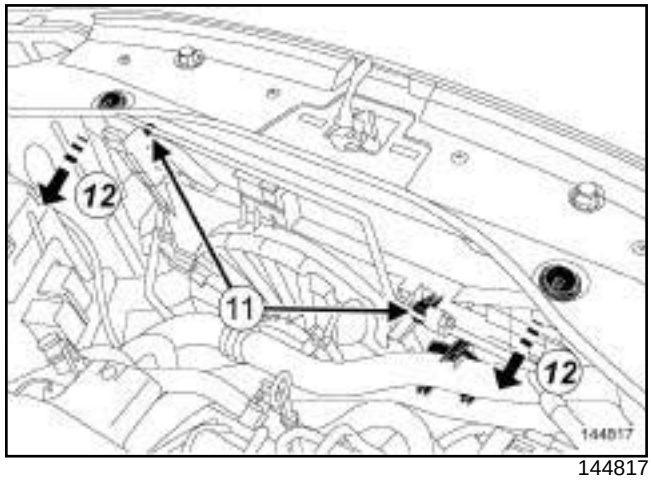

144817

❑ Unclip the « condenser - expansion valve » connecting pipe at (**11**) .

WARNING

In order to avoid any refrigerant leaks, do not damage (deform, twist, etc.) the pipe.

❑ Pull the fan assembly according to the arrows (**12**) passing it under the « condenser - expansion valve » connecting pipe.

❑

Note:

Do not damage the cooling unit vanes (radiator, condenser, etc.) during handling.

❑ Remove the engine cooling fan assembly from above the vehicle.

In the event of replacement

❑ Remove from the fan assembly:

- the power-assisted steering hose clips,
- the wiring clip,
- the support of the intercooler duct and coolant hose on the fan assembly.

K9K

REFITTING

I - REFITTING PREPARATION OPERATION

In the event of replacement

❏ Refit on the fan assembly:

- the power-assisted steering hose clips,
- the wiring clip,
- the support of the intercooler duct and coolant hose on the fan assembly.

II - REFITTING OPERATION

❏ Proceed in the reverse order to removal.

❏ Connect the battery (see **Battery: Removal - Refitting**) (80A, Battery).

III - CHECKING THE OPERATION OF THE FAN UNIT

❏ Start the engine.

❏ Disconnect the coolant temperature sensor connector.

❏ Check the operation of the fan assembly.

❏ Connect the coolant temperature sensor connector.

❏ Switch off the engine.

Coolant pump inlet pipe: Removal - Refitting

K9K, and 796

Tightening torques ▽	
coolant pump inlet pipe bolt	**22 N.m**
accelerometer	**20 N.m**

IMPORTANT
Wear leaktight gloves (Nitrile type) for this operation.

IMPORTANT
Wear heat protective gloves during the operation.

IMPORTANT
The circuits are designed to be pressurised, so be careful at high temperatures (risk of serious burns).

Do not remove the cap from the expansion bottle while the engine is hot.

Take care when carrying out a repair under the bonnet, as the radiator fan(s) may start to operate without warning.

Do not open the bleed screw(s) with the engine running.

WARNING
Prepare for the flow of fluid, and protect the surrounding components.

REMOVAL

I - REMOVAL PREPARATION OPERATION

❑ Position the vehicle on a two-post lift (see **Vehicle: Towing and lifting**) (02A, Lifting equipment).

❑ Disconnect the battery (see **Battery: Removal - Refitting**) (80A, Battery).

❑ Remove:

- the engine cover,
- the engine undertray bolts,
- the engine undertray.

❑ Remove the front bumper (see **Front bumper: Removal - Refitting**) (55A, Exterior protection).

❑ Drain the engine cooling system (see **19A**, **Cooling**, **Cooling system: Draining - Refilling**, page **19A-6**) .

❑ Remove the oil-water heat exchanger (see **10A**, **Engine and cylinder block assembly**, **Oil-coolant heat exchanger: Removal - Refitting**, page **10A-37**) .

II - REMOVAL OPERATION

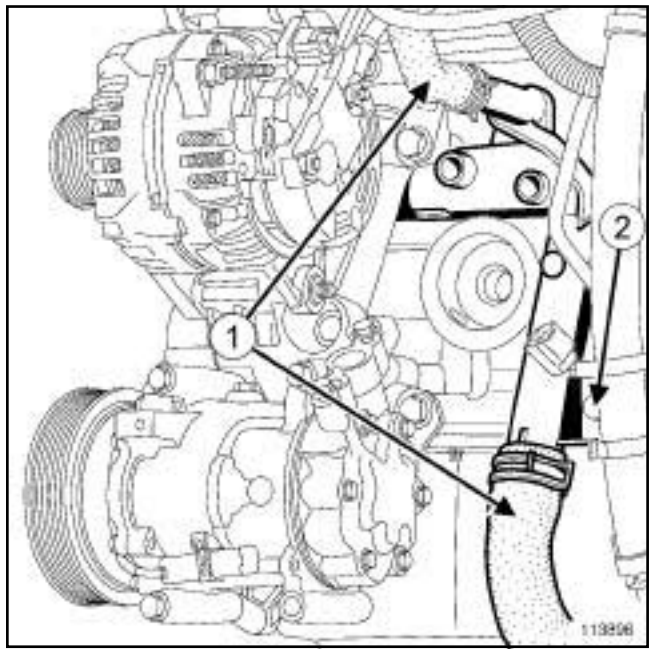

113896

❑ Disconnect:

- the coolant hoses (**1**) from the coolant pump inlet pipe,
- the accelerometer connector.

❑ Remove the accelerometer using.

❑ Remove:

- the water pump inlet pipe bolt (**2**) ,
- the coolant pump inlet pipe.
- the coolant pump inlet pipe seal.

REFITTING

I - REFITTING PREPARATION OPERATION

❑ **parts always to be replaced: seal between coolant pump inlet pipe and coolant pump**

K9K, and 796

- Use **SURFACE CLEANER** (see) (04B, Consumables - Products) to clean and degrease:
  - the coolant pump inlet pipe seal housing if it is being reused,
  - the seal housing in the cylinder block.

> **WARNING**
> To ensure proper sealing, the gasket surfaces must be clean, dry and not greasy (avoid any finger marks).

> **WARNING**
> Do not scrape the joint faces of the aluminium, any damage caused to the joint face will result in a risk of leaks.

- Replace the removed clips.

II - REFITTING OPERATION

- Refit the coolant pump inlet pipe to the cylinder block.
- Torque tighten the **coolant pump inlet pipe bolt (22 N.m)**.
- Refit the accelerometer using the tool.
- Tighten to torque the **accelerometer (20 N.m)**.
- Connect:
  - the accelerometer connector,
  - the coolant hoses onto the coolant pump inlet pipe.

III - FINAL OPERATION

- Refit the oil-water heat exchanger (see **10A**, **Engine and cylinder block assembly**, **Oil-coolant heat exchanger: Removal - Refitting**, page **10A-37**) .
- Fill the cooling system (see **19A**, **Cooling**, **Cooling system: Draining - Refilling**, page **19A-6**) .
- Refit the front bumper (see **Front bumper: Removal - Refitting**) (55A, Exterior protection).
- Refit:
  - the engine undertray,
  - the engine undertray bolts,
  - the engine cover.
- Connect the battery (see **Battery: Removal - Refitting**) (80A, Battery).
- Bleed the cooling system (see **19A**, **Cooling**, **Cooling system: Draining - Refilling**, page **19A-6**) .

K4M

Tightening torques ▽	
coolant pump inlet pipe bolt	**22 N.m**

REMOVAL

I - REMOVAL PREPARATION OPERATION

❑ Position the vehicle on a two-post lift (see **Vehicle: Towing and lifting**) (02A, Lifting equipment).

❑ Disconnect the battery (see **Battery: Removal - Refitting**) (80A, Battery).

❑ Remove the injector rail protector.

❑ Drain the cooling system (see **19A**, **Cooling**, **Cooling system: Draining - Refilling**, page **19A-6**) .

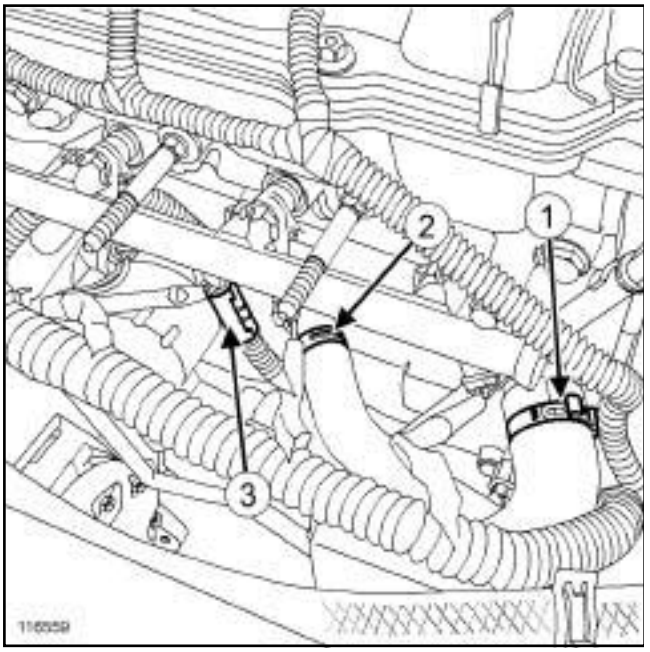

116559

❑ Disconnect:

- the cooling radiator bottom hose (**1**) ,
- the heater hose (**2**) .

❑ Unclip the wiring on the coolant pump inlet pipe at (**3**) .

❑ Disconnect the connector from cylinder injector no. 3.

II - OPERATION FOR REMOVAL OF PART CONCERNED

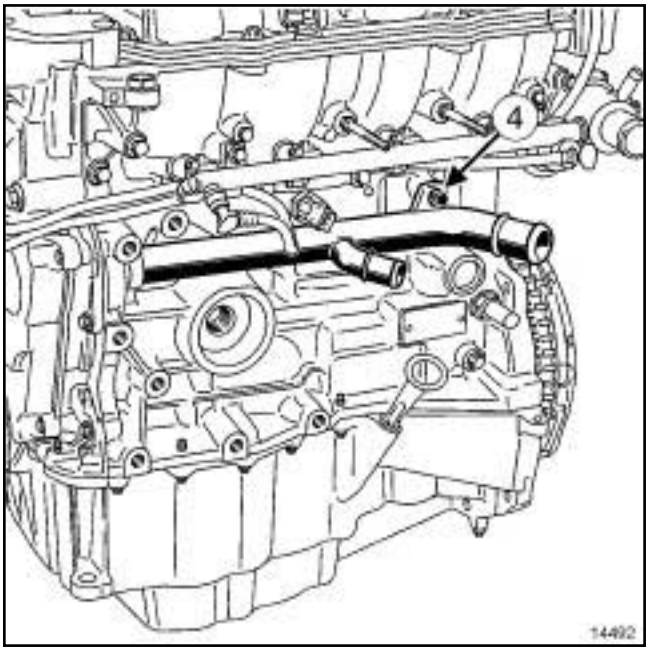

14492

❑ Remove:

- the bolt (**4**) from the coolant pump inlet pipe,
- the coolant pump inlet pipe,
- the coolant pump inlet pipe seal.

REFITTING

I - REFITTING PREPARATION OPERATION

❑ **parts always to be replaced: seal between coolant pump inlet pipe and coolant pump**

❑ Always replace the cooling hose clips.

II - REFITTING OPERATION FOR PART CONCERNED

❑ Refit the coolant pump inlet pipe fitted with a new seal.

❑ Torque tighten the **coolant pump inlet pipe bolt (22 N.m)**.

III - FINAL OPERATION

❑ Connect:

- the connector to cylinder injector no. 3.
- the heater hose on the coolant pump inlet pipe,
- the cooling radiator bottom hose.

❑ Clip the wiring onto the coolant pump inlet pipe.

K4M

- ❑ Refit the injector rail protector.
- ❑ Fill the cooling system (see **19A**, **Cooling**, **Cooling system: Draining - Refilling**, page **19A-6**) .
- ❑ Connect the battery (see **Battery: Removal - Refitting**) (80A, Battery).
- ❑ Bleed the cooling system (see **19A**, **Cooling**, **Cooling system: Draining - Refilling**, page **19A-6**) .

Special tooling required	
Ms. 583	Pipe clamps.
Mot. 1448	Remote operation pliers for hose clips.

Tightening torques ▽	
expansion bottle nuts	**8 N.m**

IMPORTANT

The circuits are designed to be pressurised, so be careful at high temperatures (risk of serious burns).

Do not remove the cap from the expansion bottle while the engine is hot.

Take care when carrying out a repair under the bonnet, as the radiator fan(s) may start to operate without warning.

Do not open the bleed screw(s) with the engine running.

WARNING

The coolant helps to keep the engine running properly (heat exchange).

The system does not operate using pure water.

WARNING

If the coolant is leaking from the expansion bottle cap, replace the valve.

REMOVAL

REMOVAL OPERATION

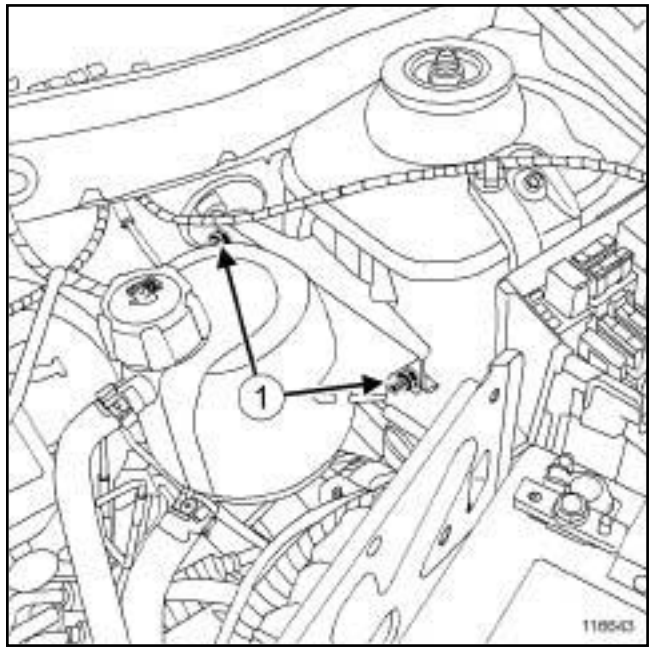

116643

- ❑ Remove the expansion bottle nuts (**1**) .
- ❑ Move aside the expansion bottle.
- ❑ Position hose clamps **(Ms. 583)** on the expansion bottle hoses.
- ❑ Remove the expansion bottle cap.
- ❑ Drain the coolant from the expansion bottle.
- ❑ Remove the following using the tool **(Mot. 1448)** or « CLIC » clip pliers:
  - the clamp of the top hose of the expansion bottle,
  - the clamp of the bottom hose of the expansion bottle.
- ❑ Disconnect:
  - the expansion bottle bottom hose,
  - the expansion bottle top hose.
- ❑ Remove the expansion bottle .

REFITTING

I - REFITTING PREPARATION OPERATION

- ❑ Always replace the « CLIC » type clips.

II - REFITTING OPERATION

- ❑ Connect:
  - the expansion bottle top hose,

- the expansion bottle bottom hose.

❏ Refit the following using the tool **(Mot. 1448)** or « CLIC » clip pliers:

- the clamp of the top hose of the expansion bottle,
- the clamp of the bottom hose of the expansion bottle.

❏ Fill the expansion bottle with coolant.

❏ Remove the hose clamps **(Ms. 583)**.

❏ Refit the expansion bottle.

❏ Torque tighten the **expansion bottle nuts (8 N.m)**.

III - FINAL OPERATION

❏ Top up the coolant level in the expansion bottle.

❏ Refit the expansion bottle cap.

❏ Bleed the cooling system (see **19A**, **Cooling**, **Cooling system: Draining - Refilling**, page **19A-6**) .

K9K

Tightening torques ▽	
expansion bottle nuts	**8 N.m**

IMPORTANT
Wear leaktight gloves (Nitrile type) for this operation.

IMPORTANT
The circuits are designed to be pressurised, so be careful at high temperatures (risk of serious burns).

Do not remove the cap from the expansion bottle while the engine is hot.

Take care when carrying out a repair under the bonnet, as the radiator fan(s) may start to operate without warning.

Do not open the bleed screw(s) with the engine running.

WARNING
Prepare for the flow of fluid, and protect the surrounding components.

REMOVAL

I - REMOVAL PREPARATION OPERATION

❑ Position the vehicle on a two-post lift (see **Vehicle: Towing and lifting**) .

❑ Remove:

- the engine cover,
- the engine undertray bolts,
- the engine undertray,
- the air filter unit (see **12A**, **Fuel mixture**, **Air filter unit: Removal - Refitting**, page **12A-6**) ,
- the expansion bottle nuts.

❑ Move aside the expansion bottle.

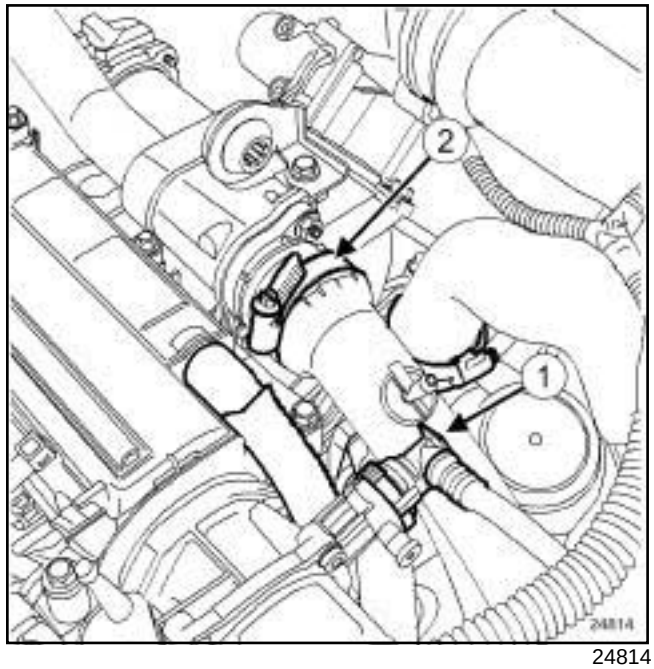

24814

❑ Disconnect:

- the union (**1**) on the vacuum pump,
- the air duct between the intercooler and the EGR assembly at (**2**) .

K9K, and 796

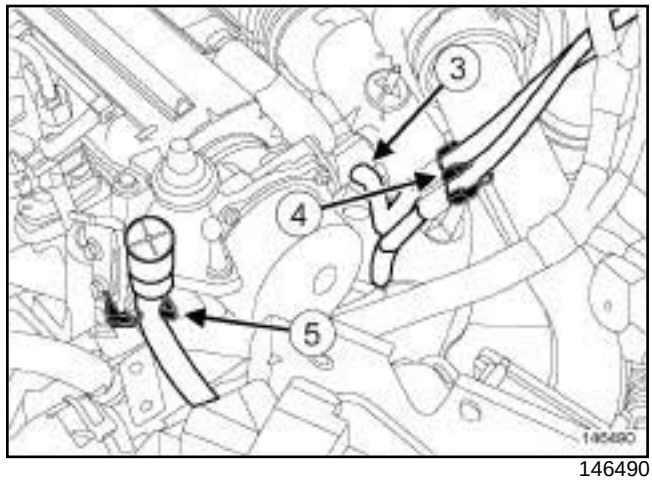

146490

❑ Disconnect the EGR solenoid valve pipe at (**3**) .

❑ Unclip:

- the EGR solenoid valve pipes at (**4**) ,
- the gearbox breather pipe at (**5**) .

❑ Move aside the air duct between the intercooler and the EGR assembly.

K9K

II - REMOVAL OPERATION

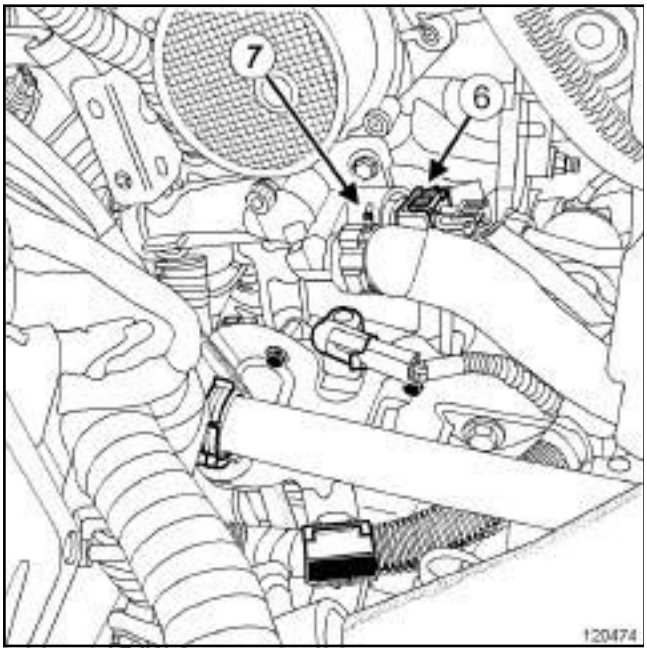

120474

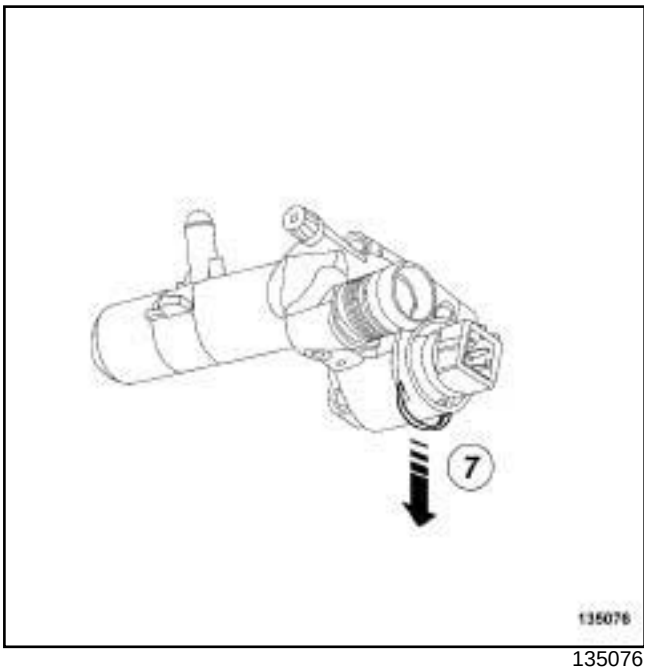

135076

❑ Disconnect the coolant temperature sensor connector (**6**) .

❑ Remove:

- the coolant temperature sensor retaining clip (**7**) ,
- the coolant temperature sensor,
- the coolant temperature sensor O-ring.

REFITTING

I - REFITTING PREPARATION OPERATION

❑ **parts always to be replaced: coolant temperature sensor seal**.

❑ Use **SURFACE CLEANER** (see) to clean and degrease:

- the mating face of the coolant temperature sensor if it is to be reused,
- the coolant outlet unit.

II - REFITTING OPERATION

❑ Refit:

- a new coolant temperature sensor seal on the coolant temperature sensor,
- the coolant temperature sensor,
- the coolant temperature sensor clip.

❑ Connect the coolant temperature sensor connector.

III - FINAL OPERATION

❑ Position the air duct between the intercooler and the EGR assembly.

❑ Connect:

- the air duct on the EGR assembly,
- the union to the vacuum pump.

K9K, and 796

❑ Connect the EGR solenoid valve pipe to the vacuum pump.

❑ Clip on:

- the breather pipe from the gearbox,
- the EGR solenoid valve pipes.

❑ Position the expansion bottle.

❑ Torque tighten the **expansion bottle nuts (8 N.m)**.

❑ Refit:

- the air filter unit (see **12A**, **Fuel mixture**, **Air filter unit: Removal - Refitting**, page **12A-6**) ,
- the engine undertray,
- the engine undertray bolts,
- the engine cover.

K9K

❑ Perform the following operations:

- top up the cooling system,
- bleed the cooling system (see **19A**, **Cooling**, **Cooling system: Draining - Refilling**, page **19A-6**) .

K4M

Tightening torques ▽	
coolant temperature sensor	**30 N.m**

IMPORTANT

The circuits are designed to be pressurised, so be careful at high temperatures (risk of serious burns).

Do not remove the cap from the expansion bottle while the engine is hot.

Take care when carrying out a repair under the bonnet, as the radiator fan(s) may start to operate without warning.

Do not open the bleed screw(s) with the engine running.

WARNING

Before the operation, protect the electrical accessories to prevent any risk of short circuiting and protect the belts to avoid damaging them.

WARNING

The coolant helps to keep the engine running properly (heat exchange).

The system does not operate using pure water.

REMOVAL

I - REMOVAL PREPARATION OPERATION

❑ Remove the air resonator (see **12A**, **Fuel mixture**, **Air resonator: Removal - Refitting**, page **12A-2**) .

II - OPERATION FOR REMOVAL OF PART CONCERNED

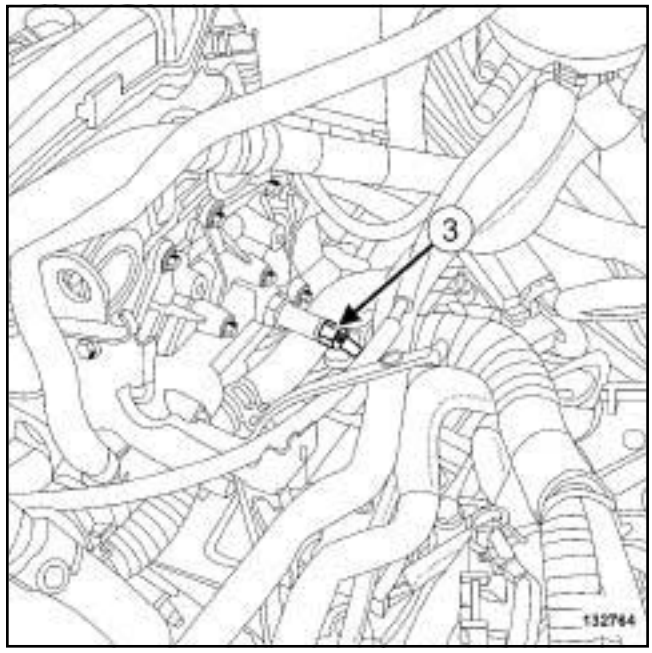

132764

❑ Disconnect the coolant temperature sensor connector (**3**) .

❑ Remove the coolant temperature sensor.

REFITTING

I - REFITTING PREPARATION OPERATION

❑

Note:

Apply 1 to 2 drops of **FRENETANCHE** (see **Vehicle: Parts and consumables for the repair**) (04B, Consumables - Products) to the coolant temperature sensor thread (only if the sensor is to be reused).

❑ Use **SURFACE CLEANER** (see **Vehicle: Parts and consumables for the repair**) (04B, Consumables - Products) to clean and degrease the mating face of the coolant temperature sensor on the water chamber.

II - REFITTING OPERATION FOR PART CONCERNED

❑ Refit the coolant temperature sensor.

❑ Torque tighten the **coolant temperature sensor (30 N.m)**.

❑ Connect the coolant temperature sensor connector.

K4M

III - FINAL OPERATION

- Refit the air resonator (see **12A**, **Fuel mixture**, **Air resonator: Removal - Refitting**, page **12A-2**) .
- Perform the following operations:
  - top up the coolant level,
  - bleed the cooling system (see **19A**, **Cooling**, **Cooling system: Draining - Refilling**, page **19A-6**) .

K4M

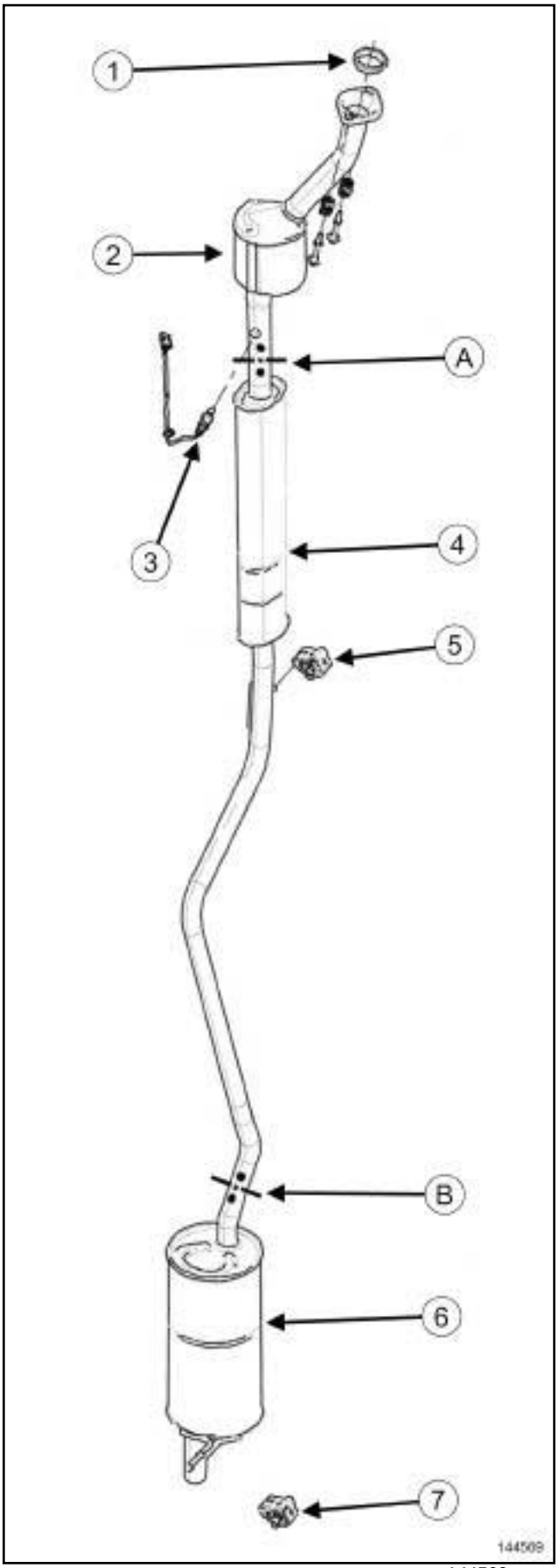

144569

(**A**)	Area to be cut A
(**B**)	Area to be cut B
(**1**)	Exhaust system sealing ring
(**2**)	Catalytic converter
(**3**)	Downstream oxygen sensor
(**4**)	Expansion chamber
(**5**)	Expansion chamber rubber pad
(**6**)	Silencer
(**7**)	Silencer rubber pad

K9K

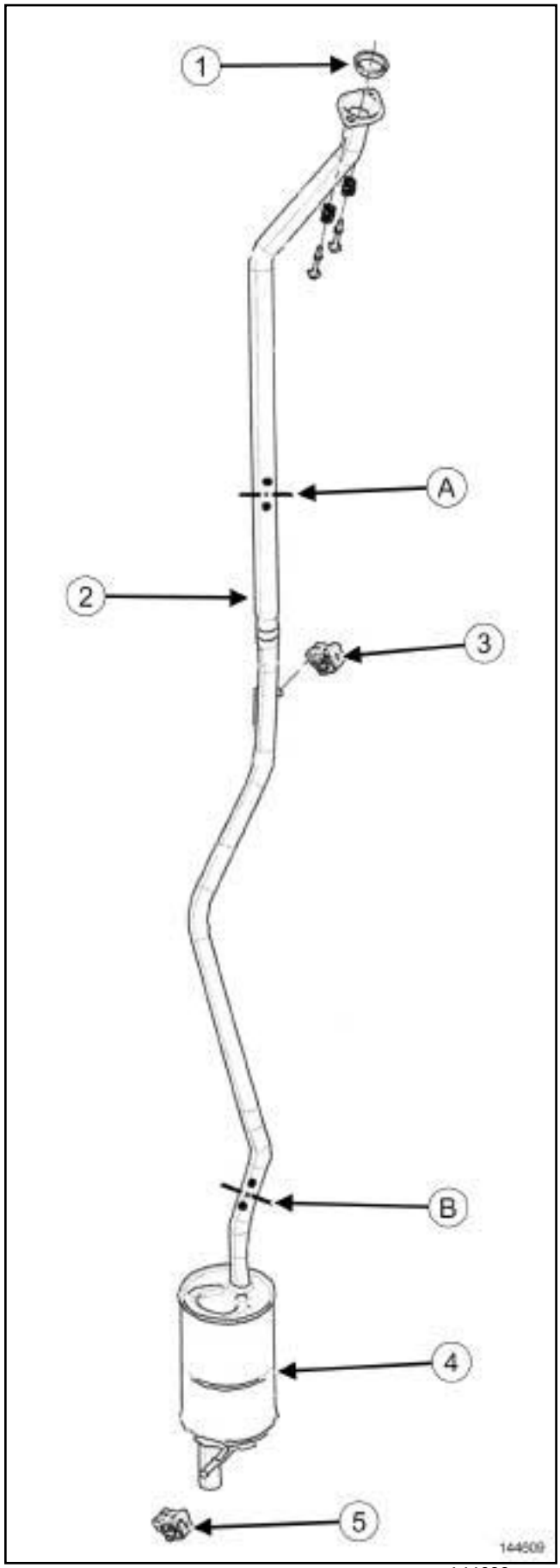

144609

(**A**)	Area to be cut A
(**B**)	Area to be cut B
(**1**)	Exhaust system sealing ring
(**2**)	Intermediate pipe
(**3**)	Intermediate pipe rubber pad
(**4**)	Silencer
(**5**)	Silencer rubber pad

Special tooling required	
Mot. 1199-01	Exhaust pipe cutter (diameter 35/50 mm and diameter 50/65mm). Complete kit in a case.

Equipment required
component jack

I - PARTS AND CONSUMABLES FOR THE REPAIR

1 - Parts always to be replaced:

- the exhaust sleeve (if fitted)

- the seal or sealing ring on the connection between the catalytic converter or catalytic pre-converter and the rest of the exhaust system

- the exhaust clip(s) (if fitted)

2 - Consumables (see Part number in Technical Note 5068, 04B, Consumables - Products):

- exhaust mastic

- surface cleaner

- grey abrasive pads

II - ADVICE TO OBSERVE

IMPORTANT
Do not park and run the engine in a place where combustible substances and materials such as grass or leaves can come into contact with the hot exhaust system.

IMPORTANT
Catalytic converters contain ceramic fibres, these are contained within a closed unit, and cannot disperse. Drilling or cutting catalytic converters is prohibited.

1 - During removal and refitting, the catalytic converter or catalytic pre-converter must not receive any knocks or impacts as this could damage it.

2 - The whole exhaust pipe is made of stainless steel.

3 - After working on the bracket between the catalytic converter or catalytic pre-converter and the rest of the exhaust system, ensure that the connection is perfectly sealed.

To do this:

- clean the bearing faces of the connection using **GREY ABRASIVE PADS**,

- degrease the bearing faces of the connection using **SURFACE CLEANER** and clean cloths,

- always replace the seal or sealing ring on the connection.

III - SPECIAL NOTES ON THE SINGLE UNIT EXHAUST PIPE

1 - Cutting the single unit exhaust pipe

The exhaust pipe is a « single unit type » .

To replace different parts of the exhaust system it must be cut.

To do this be sure to carry out these precautions in the following order:

- correctly identify the area to be cut, as explained below,

- use the cutting tool correctly **(Mot. 1199-01)**,

- position the exhaust sleeve correctly.

2 - Identifying the area of the exhaust system to be cut

Two marks made on the exhaust system define the area to be cut (see **Exhaust: Parts and consumables for the repair**) (see MR for vehicle concerned, 19B, Exhaust).

Example of cutting area

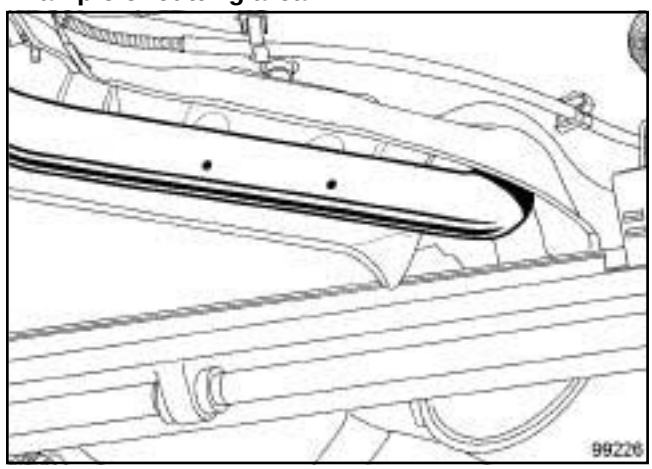

99226

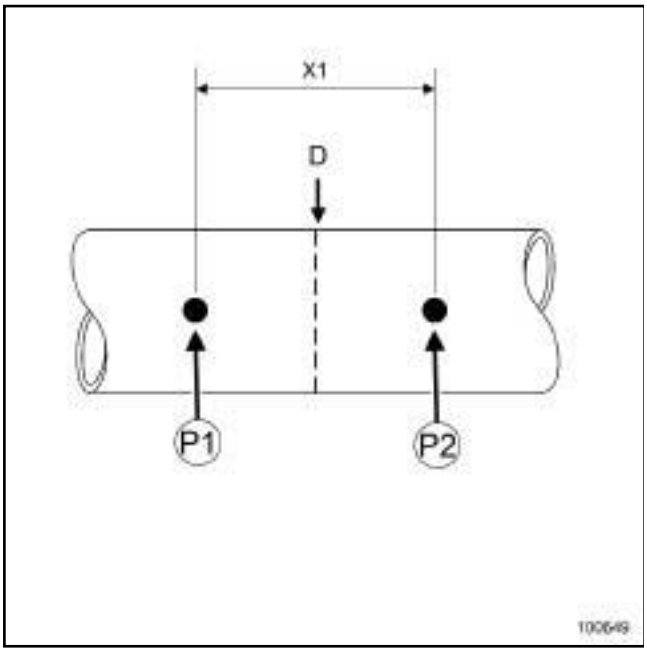

100649

Before cutting the exhaust system, draw a line (**D**) between the two marks (**P1**) and (**P2**) .

The distance between the two marks on the exhaust pipe is (**X1**) : **80 mm**.

3 - Operate tool Mot. 1199-01

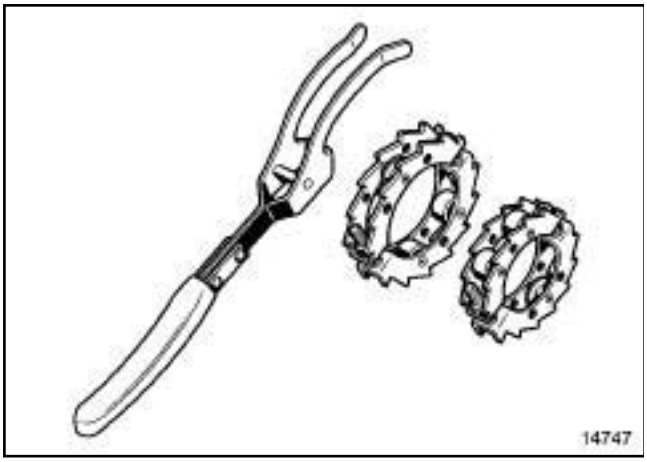

14747

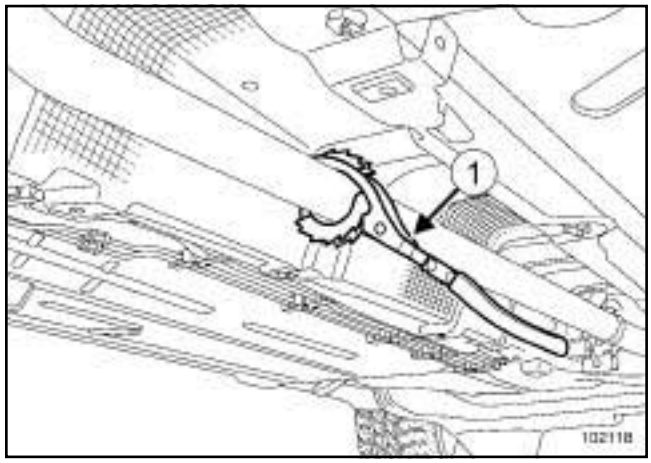

102118

Fit the **(Mot. 1199-01)** (**1**) on the exhaust pipe.

Tighten the two bolts on the tool until they touch the pipe in order to clamp the tool onto the pipe.

Turn the cutting tool using the handle and pressing it against the pipe (as indicated in the diagram above).

Tighten the two bolts on the tool whilst cutting, until the pipe is completely cut.

Note:

Do not over-tighten the tool onto the pipe to avoid deforming it.

Once the pipe is cut, file and deburr the end of the pipe to be used on the vehicle again.

4 - Positioning the exhaust sleeve

WARNING
Do not reuse an old exhaust sleeve.

Exhaust sleeve with 1 bolt

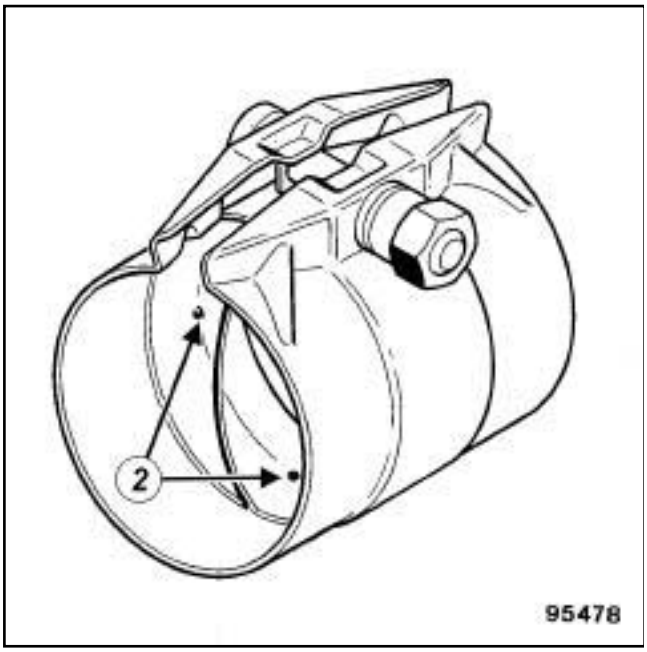

95478

Exhaust sleeve with 2 bolts

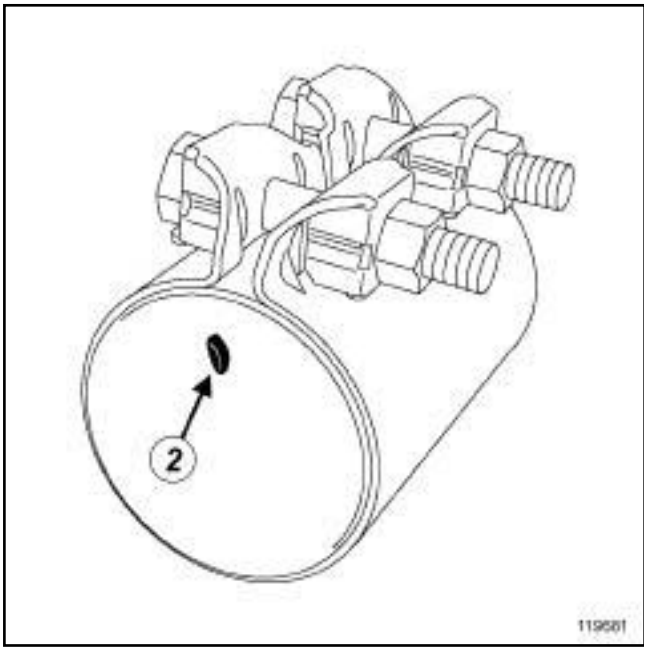

119681

Fit the exhaust sleeve onto the part of the exhaust system fitted to the vehicle.

Position the pipe onto the lugs (**2**) inside the exhaust sleeve.

Tighten the exhaust sleeve bolt(s) slightly (depending on the version).

Position the second part of the exhaust system under the vehicle, fitting it in the exhaust sleeve.

Note:

If necessary, use a **component jack** to lift and hold the heavy and bulky components of the exhaust system.

Position the second exhaust pipe onto the lugs inside the exhaust sleeve.

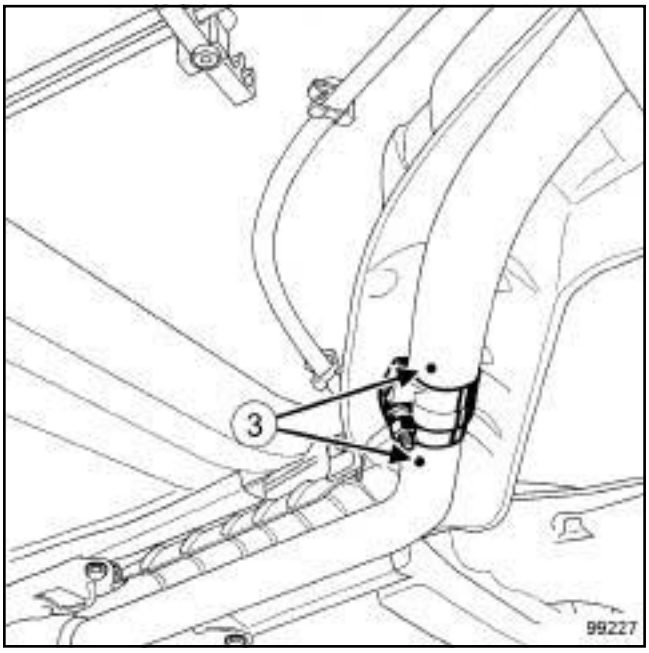

99227

Check that the two cut marks (**3**) are aligned (if applicable).

Position the sleeve so that there is no risk of contact between its bolt or bolts and the heat shields.

Torque tighten:

- the **exhaust sleeve nut with 1 bolt (25 N.m)** (if fitted),
- the **exhaust sleeve nuts with 2 bolts (18 N.m)** (if fitted).

Check the following and deal with if necessary:

- no underbody contact between the exhaust system and the heat shields,
- all of the heat shields are present and secure.

Note:

Any damaged heat shields must be replaced.

Start the engine.

Check that there are no leaks: deal with any leaks.

Note:

If there are leaks from the **EXHAUST SLEEVES WITH 1 BOLT**, apply **EXHAUST MASTIC** to the sleeve (see part no. in Technical Note 5068, 04B, Consumables - Products).

If the application of exhaust mastic does not fix the leak:

- remove and replace the used exhaust sleeve,
- check the condition of the exhaust pipes (condition of the pipe surface, deburring of the area cut, damage to the pipes).
- fit the new sleeve in accordance with the instructions given before.

K9K, and 796

Tightening torques ▽	
turbocharger output studs	**9 N.m**
catalytic converter nuts on the turbocharger	**28 N.m**
upstream strut bolts on the engine	**44 N.m**
downstream strut bolt and nut on the gearbox	**21 N.m**
upstream strut bolts on the catalytic converter	**26 N.m**
downstream strut bolt on the catalytic converter	**21 N.m**
exhaust flange bolts	**21 N.m**

IMPORTANT

To avoid all risk of damage to the systems, apply the safety and cleanliness instructions and operation recommendations before carrying out any repair (see **19B**, **Exhaust**, **Exhaust: Precautions for the repair**, page **19B-6**) .

IMPORTANT

Wear cut-resistant gloves during the operation.

IMPORTANT

Catalytic converters contain ceramic fibres, these are contained within a closed unit, and cannot disperse. Drilling or cutting catalytic converters is prohibited.

WARNING

To prevent the surrounding components from overheating, do not damage (tear, pierce, bend, etc.) a heat shield.

Any damaged heat shields must be replaced.

REMOVAL

I - REMOVAL PREPARATION OPERATION

❑ Position the vehicle on a two-post lift (see **Vehicle: Towing and lifting**) (02A, Lifting equipment).

❑ Disconnect the battery (see **Battery: Removal - Refitting**) (80A, Battery).

❑ Remove the air filter unit (see **12A**, **Fuel mixture**, **Air filter unit: Removal - Refitting**, page **12A-6**) .

II - REMOVAL OPERATION

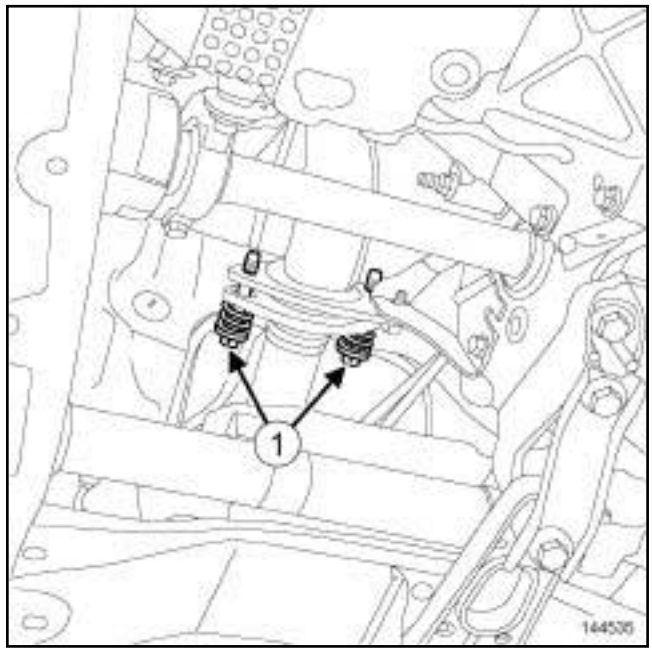

144535

❑ Remove the exhaust flange bolts (**1**) .

❑ Withdraw the exhaust pipe.

❑ Attach the exhaust pipe to the front left-hand lower arm.

K9K, and 796

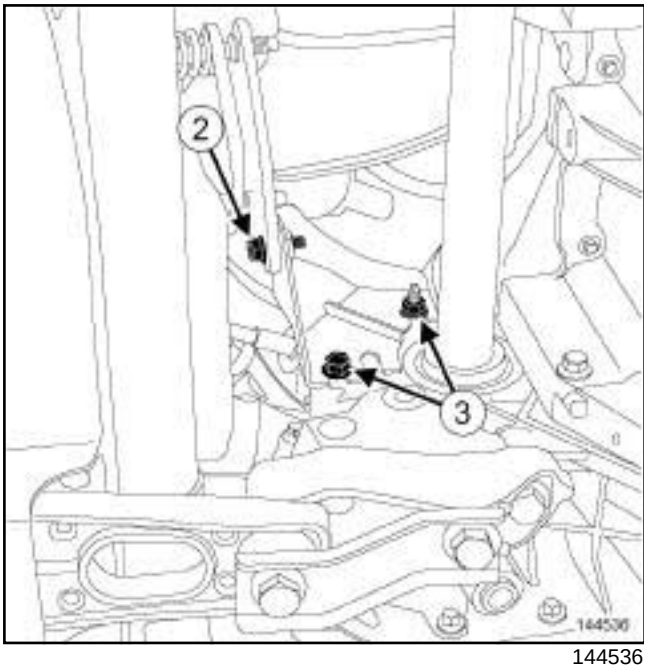

144536

❑ Remove the bolt from the downstream strut on the catalytic converter (**2**) .

❑ Loosen the downstream strut bolt and nut on the gearbox (**3**) .

❑ Remove the downstream strut.

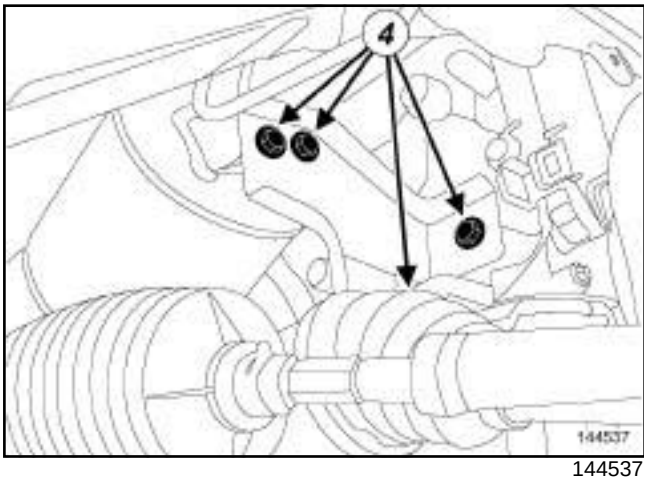

144537

❑ Remove:

- the bolts of the upstream strut (**4**) ,
- the upstream strut.

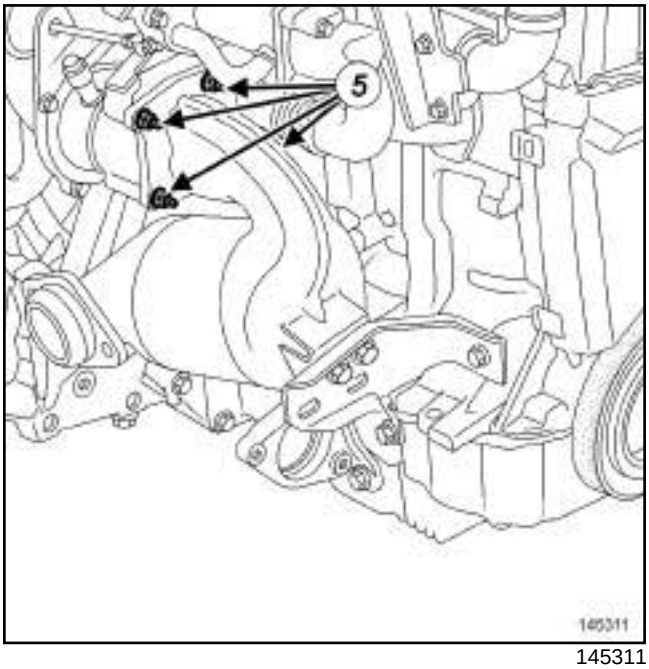

145311

❑ Remove the catalytic converter nuts on the turbo-charger (**5**) .

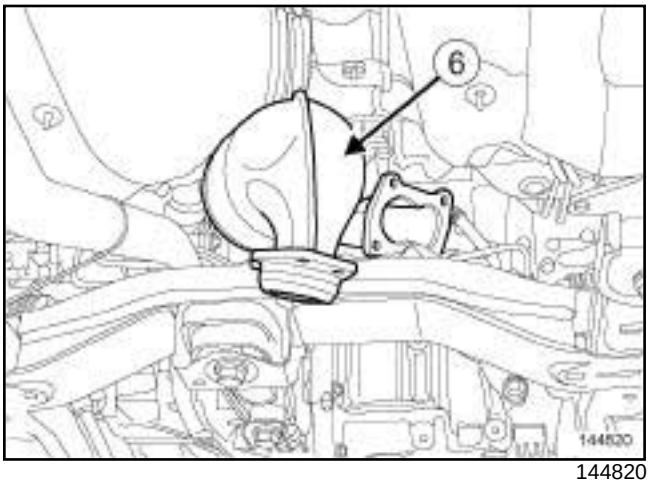

144820

❑ Remove:

- the catalytic converter (**6**) ,
- the seal between the turbocharger and the catalytic converter,
- the exhaust flange sealing ring.

K9K, and 796

REFITTING

I - REFITTING PREPARATION OPERATION

❑

> **WARNING**
> To ensure proper sealing, the gasket surfaces must be clean, dry and not greasy (avoid any finger marks).

❑ Use **ABRASIVE PADS** (see **Vehicle: Parts and consumables for the repair**) (04B, Consumables - Products) to clean the joint face of:

- the intermediate pipe,
- the catalytic converter in case of reuse,
- the turbocharger.

❑ Use **SURFACE CLEANER** and **CLEAN CLOTHS** (see **Vehicle: Parts and consumables for the repair**) (04B, Consumables - Products) to degrease the joint face of:

- the intermediate pipe,
- the catalytic converter in case of reuse,
- the turbocharger.

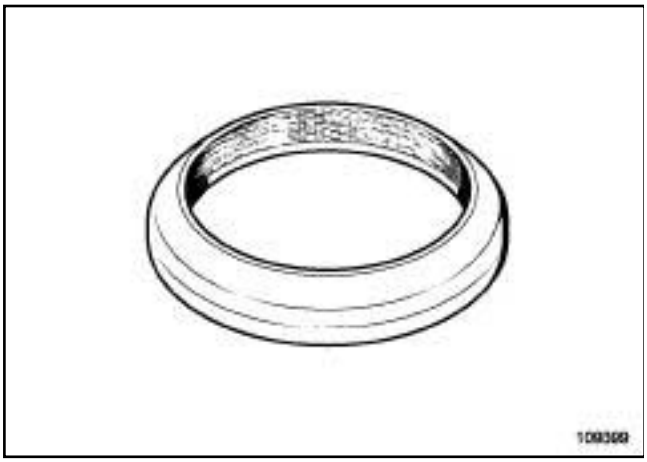

109399

❑ Always replace the exhaust flange sealing ring.

❑ **parts always to be replaced: seal between turbocharger and catalytic converter**

II - REFITTING OPERATION

❑

> Note:
> If a stud loosens during this operation, coat it with **HIGH STRENGTH THREAD LOCK** (see **Vehicle: Parts and consumables for the repair**) (04B, Consumables - Products).
>
> Torque tighten the **turbocharger output studs (9 N.m)**.

❑ Fit:

- a new seal between the turbocharger and the catalytic converter,
- the catalytic converter on the turbocharger.

❑ Pretighten in order:

- the bolt and nut of the upstream strut on the engine,
- the downstream strut bolt and nut on the gearbox,
- the upstream strut bolts on the catalytic converter,
- the downstream strut bolt on the catalytic converter,
- the catalytic converter nuts on the turbocharger.

❑ Torque tighten in order:

- the **catalytic converter nuts on the turbocharger (28 N.m)**,
- the **upstream strut bolts on the engine (44 N.m)**,
- the **downstream strut bolt and nut on the gearbox (21 N.m)**,
- the **upstream strut bolts on the catalytic converter (26 N.m)**,
- the **downstream strut bolt on the catalytic converter (21 N.m)**.

❑ Make sure there is no contact between the catalytic converter and the turbocharger oil return pipe.

❑ Proceed in the reverse order to removal.

❑ Torque tighten the **exhaust flange bolts (21 N.m)**.

III - FINAL OPERATION

❑ Check:

- that all the exhaust pipe heat shields are in place and properly attached,
- that there is no contact with the underbody.

❑ Start the vehicle.

K9K, and 796

- Check that there are no leaks and deal with them if necessary.

K4M, and 4X2 TRANSMISSION

Special tooling required	
Mot. 1199-01	Exhaust pipe cutter (diameter 35/50 mm and diameter 50/65mm). Complete kit in a case.

Equipment required
component jack

Tightening torques ▽	
bolt of the exhaust flange	**21 N.m**
oxygen sensor	**45 N.m**

IMPORTANT
To avoid all risk of damage to the systems, apply the safety and cleanliness instructions and operation recommendations before carrying out any repair (see **19B**, **Exhaust**, **Exhaust: Precautions for the repair**, page **19B-6**) .

IMPORTANT
Wear cut-resistant gloves during the operation.

IMPORTANT
Catalytic converters contain ceramic fibres, these are contained within a closed unit, and cannot disperse. Drilling or cutting catalytic converters is prohibited.

WARNING
To prevent the surrounding components from overheating, do not damage (tear, pierce, bend, etc.) a heat shield.

Any damaged heat shields must be replaced.

REMOVAL

I - REMOVAL PREPARATION OPERATION

❑ Position the vehicle on a two-post lift (see **Vehicle: Towing and lifting**) (02A, Lifting equipment).

❑ Disconnect the battery (see **Battery: Removal - Refitting**) (80A, Battery).

II - REMOVAL OPERATION

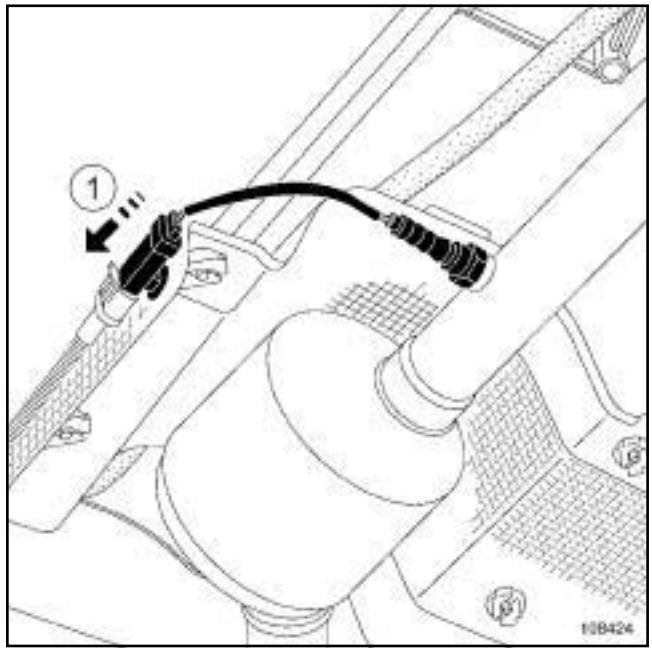

108424

❑ Remove the downstream oxygen sensor connector from its mounting by sliding it (**1**) .

❑ Disconnect the downstream oxygen sensor connector.

❑ Put a **component jack** under the catalytic converter.

❑ Locate the area of the catalytic converter to be cut (see **19B**, **Exhaust**, **Exhaust: List and location of components**, page **19B-1**) .

❑ Use the tool **(Mot. 1199-01)** to cut the exhaust pipe in the area to be cut (see **19B**, **Exhaust**, **Exhaust: Precautions for the repair**, page **19B-6**) .

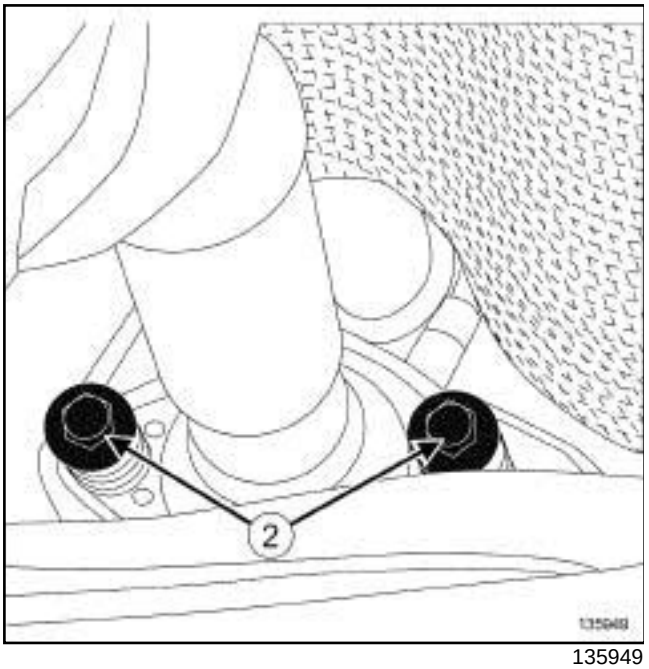

135949

❑ Remove:

- the exhaust flange bolts (**2**) ,
- the catalytic converter,
- the exhaust flange ring.

IF REPLACING THE CATALYTIC CONVERTER

❑ Remove the downstream oxygen sensor on the catalytic converter (see) .

REFITTING

I - REFITTING PREPARATION OPERATION

❑

> **WARNING**
> To ensure proper sealing, the gasket surfaces must be clean, dry and not greasy (avoid any finger marks).

❑ Clean the bearing faces of the catalytic converter using **ABRASIVE PADS** (see **Vehicle: Parts and consumables for the repair**) (04B, Consumables - Products).

❑ Degrease the bearing faces of the catalytic converter using **SURFACE CLEANER** and clean cloths (see **Vehicle: Parts and consumables for the repair**) (04B, Consumables - Products).

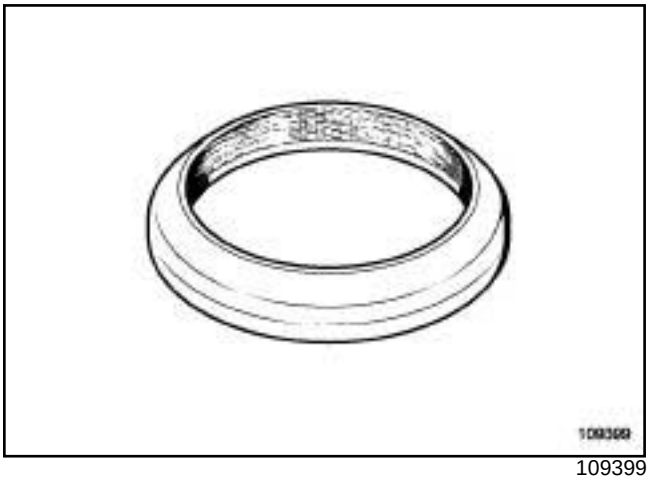
109399

❑ **parts always to be replaced: ring between exhaust manifold and catalytic converter**

II - REFITTING OPERATION

❑ Refit:

- the downstream oxygen sensor (if replacing the catalytic converter),
- the catalytic converter.

❑ Fit a new After-Sales sleeve between the catalytic converter and the expansion chamber (see **19B**, **Exhaust**, **Exhaust: Precautions for the repair**, page **19B-6**) .

> **IMPORTANT**
> Position the « nut and bolt securing the sleeve » assembly so that the assembly cannot come into contact with the underbody.

❑ Tighten the sleeve bolt while guiding the exhaust pipe to ensure correct alignment.

❑ Torque tighten:

- the **bolt of the exhaust flange (21 N.m)**,
- the **oxygen sensor (45 N.m)**.

III - FINAL OPERATION

❑ Connect the battery (see **Battery: Removal - Refitting**) (80A, Battery).

❑ Check:

- that all the exhaust pipe heat shields are in place and properly attached,
- that there is no contact with the underbody.

❑ Start the vehicle.

K4M, and 4X2 TRANSMISSION

- Check that there are no leaks and deal with them if necessary.

K4M, and 4X2 TRANSMISSION

Special tooling required	
Mot. 1199-01	Exhaust pipe cutter (diameter 35/50 mm and diameter 50/65mm). Complete kit in a case.
Mot. 1857	Pliers for removing exhaust pipe rubber mounting bushes

Equipment required
component jack

IMPORTANT
To avoid all risk of damage to the systems, apply the safety and cleanliness instructions and operation recommendations before carrying out any repair (see **19B**, **Exhaust**, **Exhaust: Precautions for the repair**, page **19B-6**) .

WARNING
To prevent the surrounding components from overheating, do not damage (tear, pierce, bend, etc.) a heat shield.

Any damaged heat shields must be replaced.

IMPORTANT
Wear heat protective gloves during the operation.

REMOVAL

I - REMOVAL PREPARATION OPERATION

❑ Position the vehicle on a two-post lift (see **Vehicle: Towing and lifting**) (02A, Lifting equipment).

❑ Place a **component jack** under the expansion chamber.

II - REMOVAL OPERATION

❑ Locate the areas of the expansion chamber to be cut (see **19B**, **Exhaust**, **Exhaust: List and location of components**, page **19B-1**) .

❑ Cut the exhaust pipe using the tool **(Mot. 1199-01)** in the designated areas to be cut (see **19B**, **Exhaust**, **Exhaust: Precautions for the repair**, page **19B-6**) .

❑ Remove the rubber pad from the expansion chamber using the tool **(Mot. 1857)**.

Note:
If the rubber pad is damaged, replace the rubber pad.

❑ Remove the expansion chamber.

REFITTING

I - REFITTING OPERATION

❑ Refit:

- the expansion chamber,
- the expansion chamber rubber pad.

❑ Fit new after-sales sleeves (see **19B**, **Exhaust**, **Exhaust: Precautions for the repair**, page **19B-6**) .

IMPORTANT
Position the « nut and bolt securing the sleeve » assembly so that the assembly cannot come into contact with the underbody.

❑ Torque tighten the sleeve bolts while supporting the exhaust pipe to ensure alignment.

II - FINAL OPERATION

❑ Check:

- all the exhaust pipe heat shields are in place and properly attached.
- that there is no contact with the underbody,

❑ Start the vehicle.

❑ Check that there are no leaks and deal with them if necessary.

K9K

Special tooling required	
Mot. 1199-01	Exhaust pipe cutter (diameter 35/50 mm and diameter 50/65mm). Complete kit in a case.
Mot. 1857	Pliers for removing exhaust pipe rubber mounting bushes

Equipment required
component jack

Tightening torques ▽	
exhaust sleeve bolts	**25 N.m**

IMPORTANT

To avoid all risk of damage to the systems, apply the safety and cleanliness instructions and operation recommendations before carrying out any repair (see **19B**, **Exhaust**, **Exhaust: Precautions for the repair**, page **19B-6**)

WARNING

To prevent the surrounding components from overheating, do not damage (tear, pierce, bend, etc.) a heat shield.

Any damaged heat shields must be replaced.

IMPORTANT

Wear heat protective gloves during the operation.

REMOVAL

I - REMOVAL PREPARATION OPERATION

❑ Position the vehicle on a two-post lift (see **Vehicle: Towing and lifting**) (02A, Lifting equipment).

❑ Fit a **component jack** under the intermediate pipe.

II - REMOVAL OPERATION

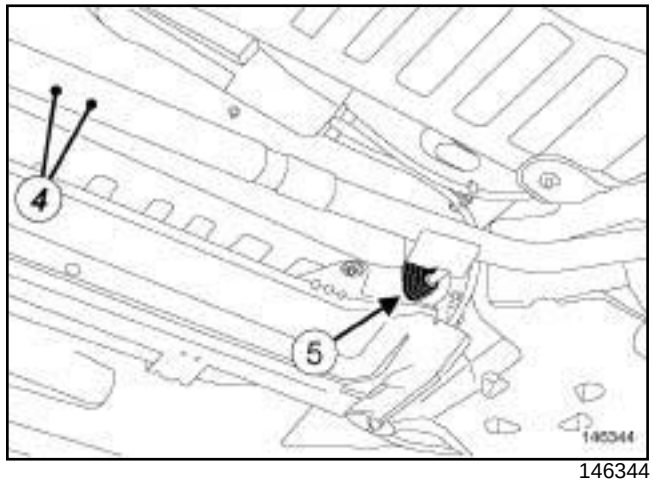

146344

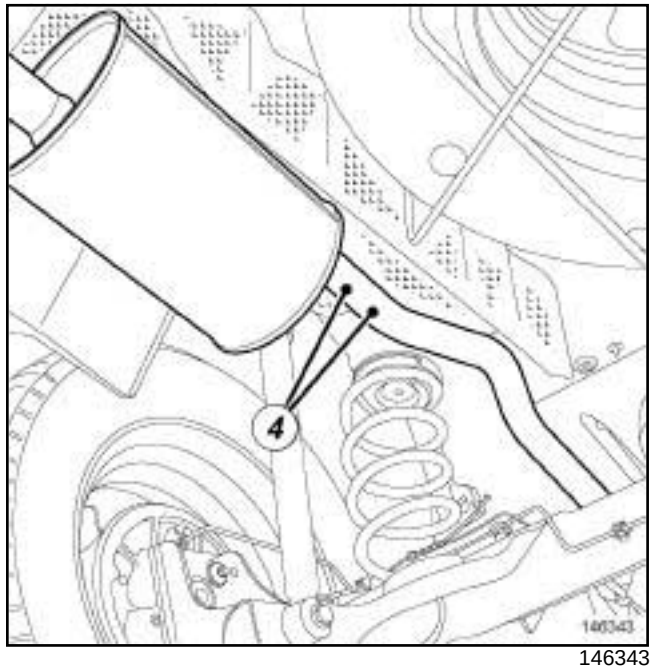

146343

❑ Cut the exhaust pipe using the tool **(Mot. 1199-01)** in the centre of the areas to be cut (**4**) (see **19B**, **Exhaust**, **Exhaust: Precautions for the repair**, page **19B-6**) .

❑ Remove the rubber mounting bush (**5**) from the intermediate pipe using the tool **(Mot. 1857)**.

Note:

If the rubber mounting bush is damaged, it must always be replaced.

❑ Remove the intermediate pipe.

K9K

REFITTING

I - REFITTING OPERATION

❏ Refit the intermediate pipe.

❏ Refit the exhaust sleeves (see **19B**, **Exhaust**, **Exhaust: Precautions for the repair**, page **19B-6**) .

> **WARNING**
> Make sure:
> - that the sleeve nut-bolt tightening assembly is vertical, with the nut facing downwards, to prevent any risk of underbody contact,
> - that you position the new component in a way that the cutting area marks are aligned,
> - that the two marks are flush with the two ends of the sleeve,
> - that an old sleeve is not reused.

❏ Torque tighten the **exhaust sleeve bolts (25 N.m)**.

❏ Refit the rubber mounting bush of the intermediate pipe.

II - FINAL OPERATION

❏ Check:

- that all the exhaust pipe heat shields are in place and properly attached,
- that there is no contact with the underbody.

4X2 TRANSMISSION

Special tooling required	
Mot. 1199-01	Exhaust pipe cutter (diameter 35/50 mm and diameter 50/65mm). Complete kit in a case.
Mot. 1857	Pliers for removing exhaust pipe rubber mounting bushes

Equipment required
component jack

IMPORTANT
To avoid all risk of damage to the systems, apply the safety and cleanliness instructions and operation recommendations before carrying out any repair (see **19B**, **Exhaust**, **Exhaust: Precautions for the repair**, page **19B-6**) .

WARNING
To prevent the surrounding components from overheating, do not damage (tear, pierce, bend, etc.) a heat shield.

Any damaged heat shields must be replaced.

IMPORTANT
Wear heat protective gloves during the operation.

REMOVAL

I - REMOVAL PREPARATION OPERATION

❑ Position the vehicle on a two-post lift (see **Vehicle: Towing and lifting**) (02A, Lifting equipment).

❑ Place a **component jack** under the silencer.

II - REMOVAL OPERATION

❑ Locate the area of the silencer to be cut (see **19B**, **Exhaust**, **Exhaust: List and location of components**, page **19B-1**) .

❑ Use the tool **(Mot. 1199-01)** to cut the exhaust pipe in the area to be cut (see **19B**, **Exhaust**, **Exhaust: Precautions for the repair**, page **19B-6**) .

❑ Remove the rubber pad from the silencer using the tool **(Mot. 1857)**.

Note:
If the rubber pad is damaged, replace the rubber pad.

❑ Remove the silencer.

REFITTING

I - REFITTING OPERATION

❑ Refit:

- the silencer,
- the silencer rubber pad.

❑ Fit a new After-Sales exhaust sleeve (see **19B**, **Exhaust**, **Exhaust: Precautions for the repair**, page **19B-6**) .

IMPORTANT
Position the « nut and bolt securing the sleeve » assembly so that the assembly cannot come into contact with the underbody.

❑ Tighten the sleeve while relieving the exhaust to ensure alignment.

II - FINAL OPERATION

❑ Check:

- that all the exhaust pipe heat shields are in place and properly attached,
- that there is no contact with the underbody.

❑ Start the vehicle.

❑ Check that there are no leaks and deal with them if necessary.

Special tooling required	
Mot. 1311-08	Union for taking fuel pressure measurements.

Equipment required
pneumatic transfer pump for fuels

IMPORTANT

During this operation, be sure to:

- refrain from smoking or bringing red hot objects close to the working area,
- be careful of fuel splashes when disconnecting the union.

IMPORTANT

Wear leaktight gloves (Nitrile type) for this operation.

IMPORTANT

Wear goggles with side protectors for this operation.

WARNING

To prevent impurities from entering the circuit, place protective plugs on all fuel circuit components exposed to the open air.

WARNING

To avoid any corrosion or damage, protect the areas on which fuel is likely to run.

DRAINING

I - DRAINING PREPARATION OPERATION

❑ Disconnect the battery (see **Battery: Removal - Refitting**) (80A, Battery).

II - DRAINING OPERATION

K4M

❑ Disconnect the fuel supply union from the injector rail ***(1)*** .

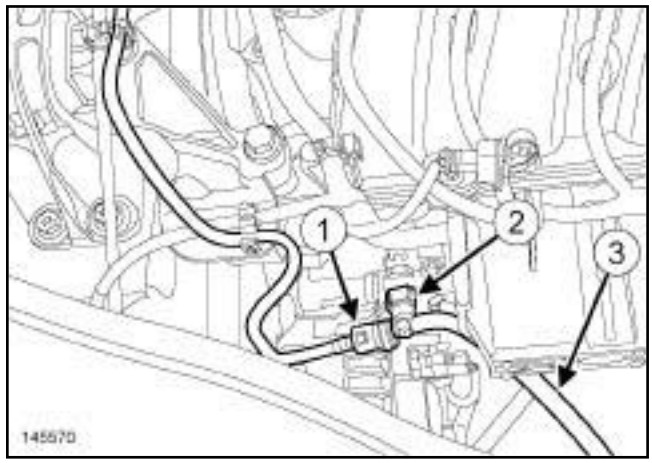

145570

❑ Fit a T-union **(Mot. 1311-08)** at (**2**) .

❑ Connect a **pneumatic transfer pump for fuels** to the T-union outlet (**3**) .

K9K

❑ Position the vehicle on a two-post lift (see **Vehicle: Towing and lifting**) (02A, Lifting equipment).

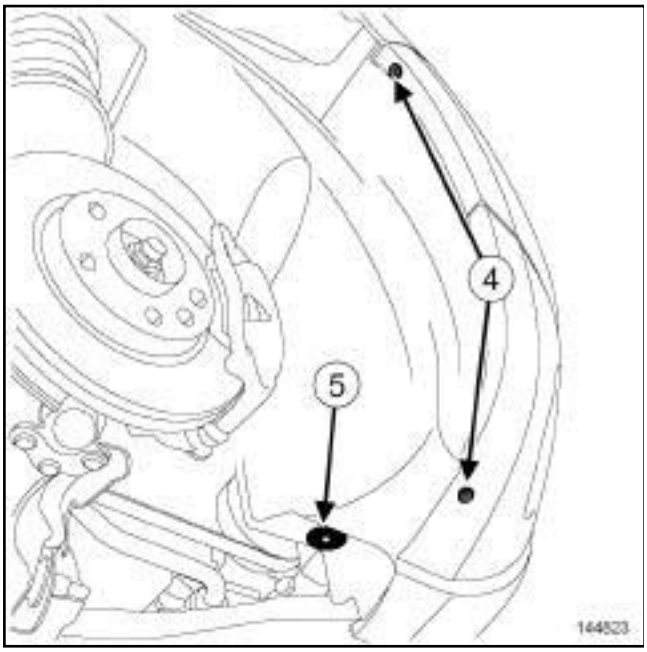

144823

❏ Remove:

- the front right-hand wheel arch liner bolts (**4**) ,
- the clip of the wheel arch liner (**5**) ,
- the diesel filter protector (see) .

❏ Disconnect the fuel outlet pipe from the fuel filter.

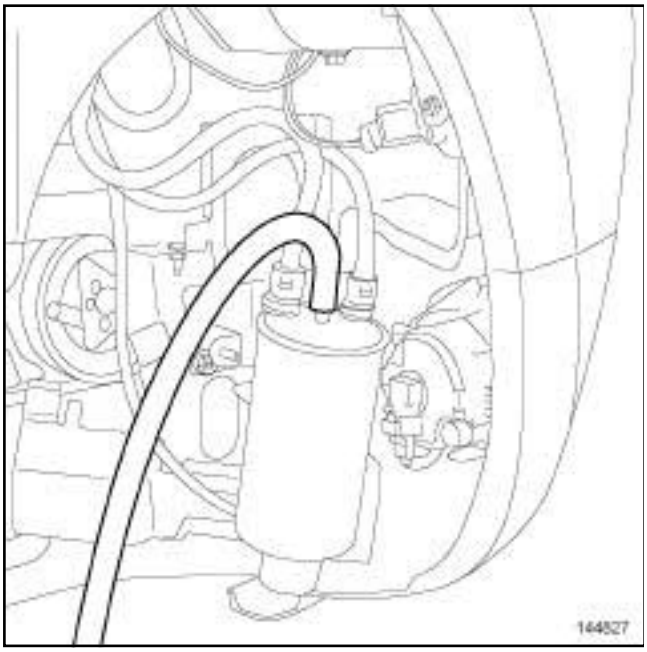

144827

❏ Connect a **pneumatic transfer pump for fuels** to the fuel filter.

❏ Prepare for fuel outflow.

❏ Drain the fuel tank.

REFITTING

❏ Proceed in the reverse order to removal.

4X2 TRANSMISSION

Tightening torques ▽	
fuel tank bolts	**21 N.m**
exhaust pipe bolts on the catalytic converter	**21 N.m**
catalytic converter bolts on the exhaust manifold	**21 N.m**
earth cable nut on the body	**8 N.m**

This method describes the removal - refitting procedure for the plastic tank

IMPORTANT

During this operation, be sure to:

- refrain from smoking or bringing red hot objects close to the working area,
- be careful of fuel splashes when disconnecting the union.

IMPORTANT

Wear goggles with side protectors for this operation.

IMPORTANT

Wear leaktight gloves (nitrile type) for this operation.

WARNING

To avoid any corrosion or damage, protect the areas on which fuel is likely to run.

WARNING

To prevent impurities from entering the circuit, place protective plugs on all fuel circuit components exposed to the open air.

REMOVAL

I - REMOVAL PREPARATION OPERATION

❑ Position the vehicle on a two-post lift (see **Vehicle: Towing and lifting**) (02A, Lifting equipment).

❑ Disconnect the battery (see **Battery: Removal - Refitting**) (80A, Battery).

❑ Drain the tank (see **19C**, **Tank**, **Fuel tank: Draining**, page **19C-1**) .

❑ Tilt the rear bench seat base (see) (76A, Rear seat frames and runners).

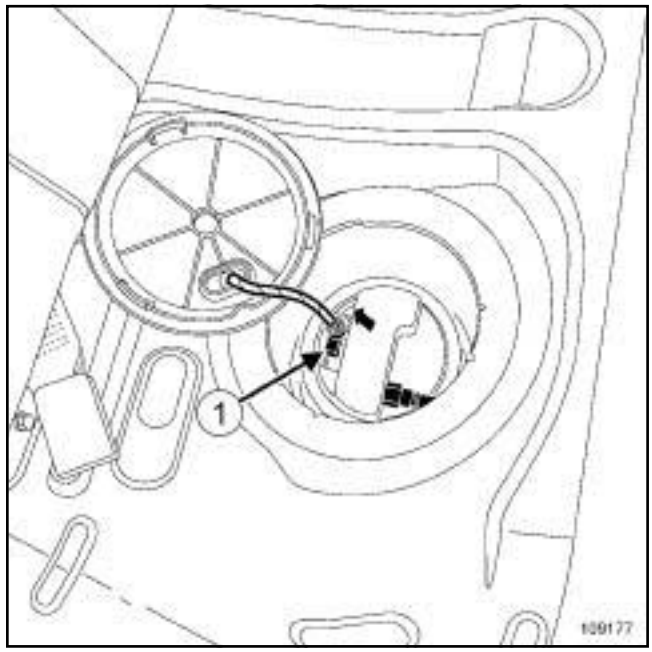

109177

❑ Remove the access flap to the fuel level sensor module on the floor.

❑ Disconnect the connector (**1**) from the fuel pump.

4X2 TRANSMISSION

K4M

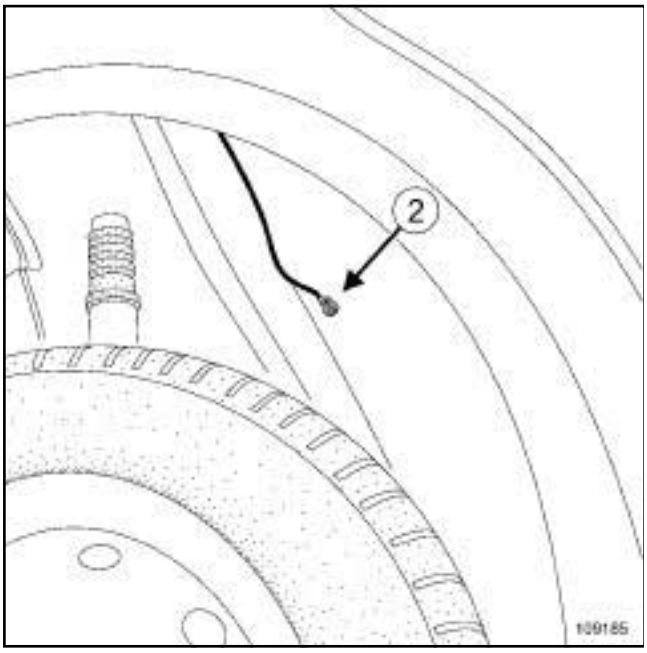

109185

❑ Remove the body earth cable at (**2**) .

K4M

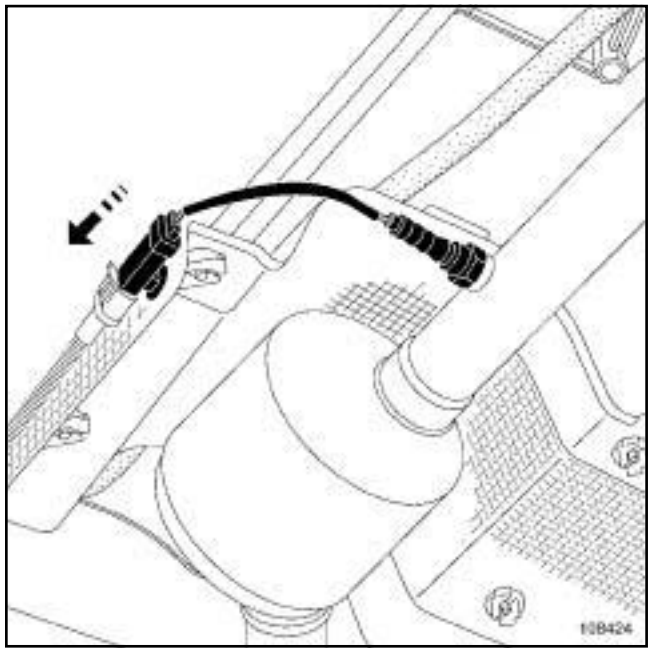

108424

❑ Remove the oxygen sensor connector by sliding it from its support (in the direction of the arrow).

❑ Disconnect the oxygen sensor connector.

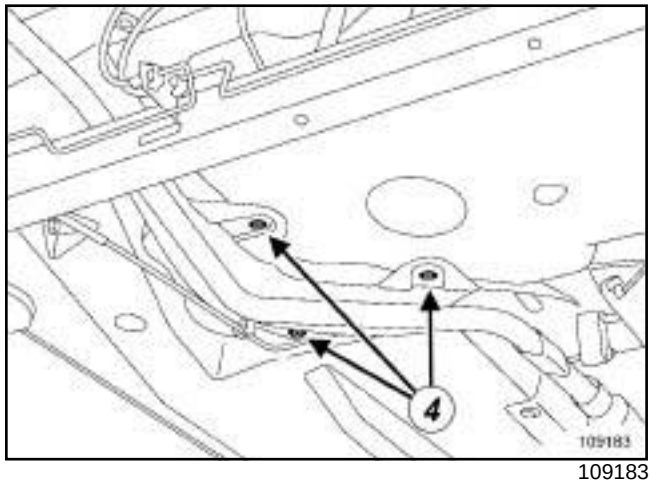

109183

❑ Remove:

- the heat shield pins (**4**) ,
- the fuel tank heat shield.

4X2 TRANSMISSION

K4M

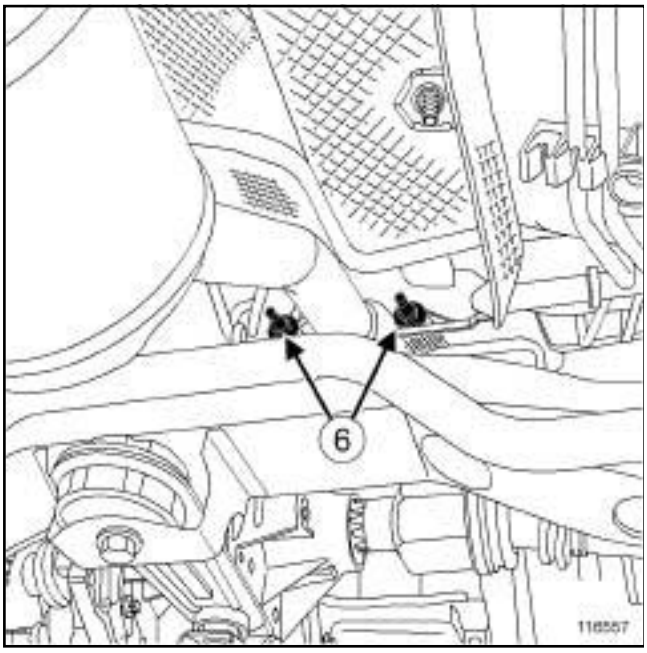

116557

- ❑ Remove the catalytic converter mountings (**6**) on the exhaust manifold.
- ❑ Detach the exhaust line assembly on the left-hand side.
- ❑ Attach the front section of the exhaust line assembly to the front lower arm on the left-hand side.

K9K

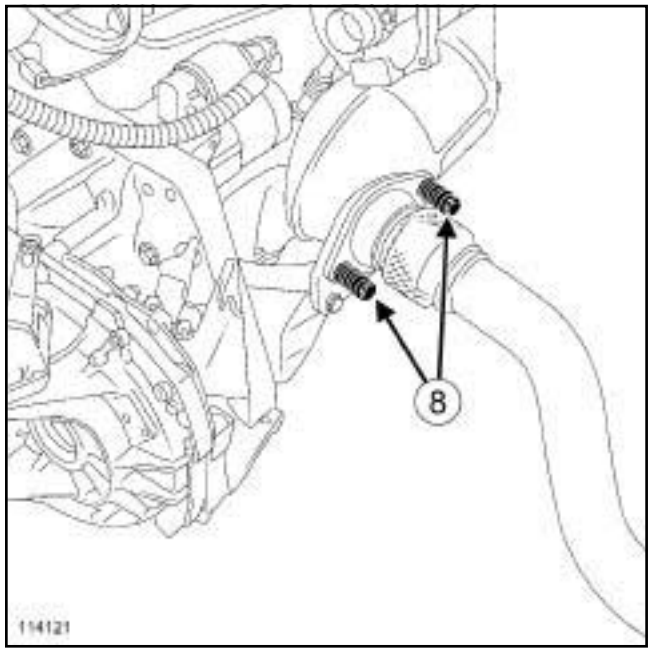

114121

- ❑ Remove the exhaust pipe mountings (**8**) from the catalytic converter.
- ❑ Place the exhaust line assembly on the left-hand side.
- ❑ Attach the front section of the exhaust line assembly to the front lower arm on the left-hand side.

- ❑ Unclip the parking brake cables from:
  - the fuel tank,
  - on the body.

II - OPERATION FOR REMOVAL OF PART CONCERNED

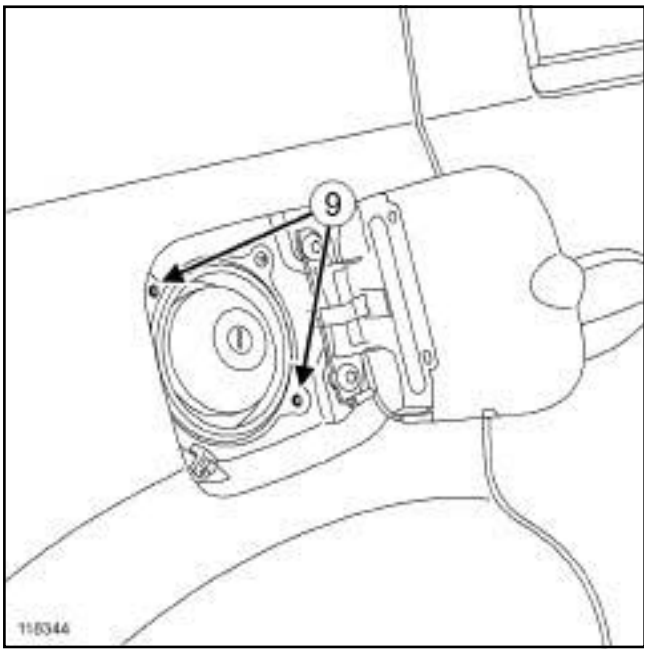

118344

❑ Remove the bolts (**9**) from the filler neck.

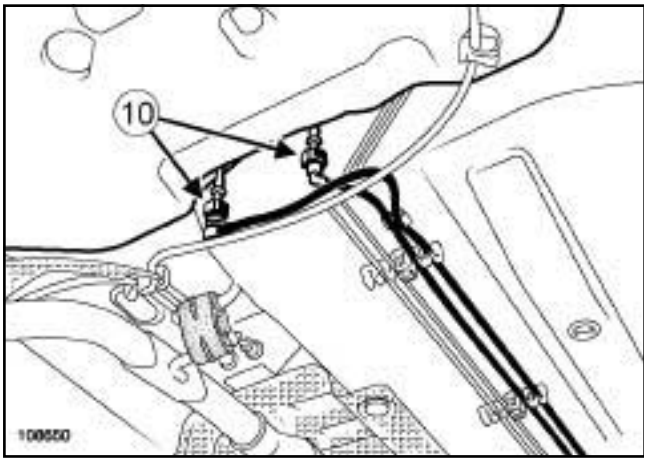

108650

❑ Disconnect the snap-on unions (**10**) from the tank outlet pipes.

❑ Remove the external fuel filter (if fitted to the vehicle) (see **Fuel filter: Removal - Refitting**) .

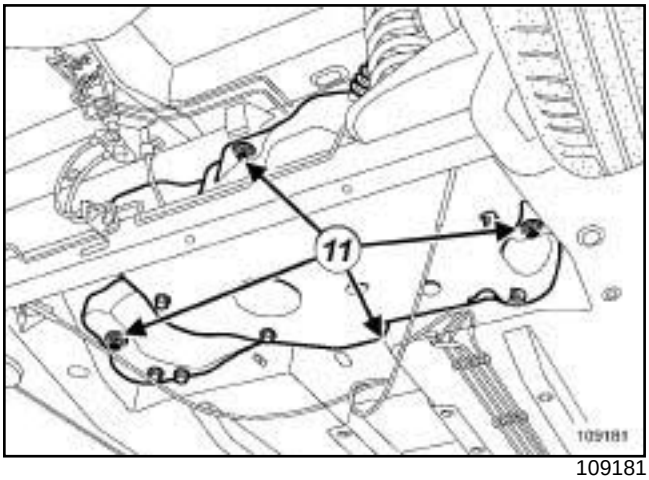

109181

❑

> Note:
>
> This operation requires two people.

❑ Remove the bolts (**11**) from the fuel tank.

❑ Lower the tank slightly.

❑ Remove the fuel tank.

REFITTING

I - REFITTING PREPARATION OPERATION

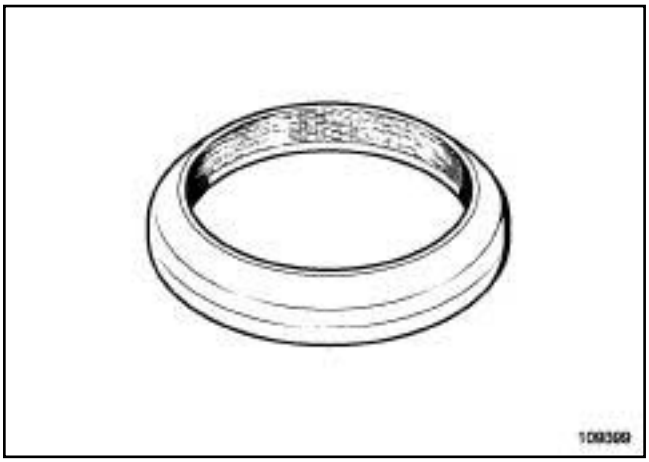

109399

❑ It is essential to replace the sealing ring between the exhaust manifold and the catalytic converter.

II - REFITTING OPERATION FOR PART CONCERNED

❑

> Note:
>
> This operation requires two people.

4X2 TRANSMISSION

- ❑ Refit the fuel tank.
- ❑ Refit the fuel tank bolts.
- ❑ Torque tighten the **fuel tank bolts (21 N.m)**.
- ❑ Refit the external fuel filter (if fitted to the vehicle) (see **Fuel filter: Removal - Refitting**) .
- ❑ Reconnect the snap-on unions to the tank outlet fuel pipes.
- ❑ Refit the filler neck bolts.

III - FINAL OPERATION

- ❑ Clip the parking brake cables:
  - onto the body,
  - onto the fuel tank.

K9K

- ❑ Refit the exhaust system assembly onto the catalytic converter.
- ❑ Torque tighten the **exhaust pipe bolts on the catalytic converter (21 N.m)**.

K4M

- ❑ Refit the exhaust system assembly onto the exhaust manifold.
- ❑ Torque tighten the **catalytic converter bolts on the exhaust manifold (21 N.m)**.
- ❑ Connect the oxygen sensor connector.
- ❑ Refit:
  - the oxygen sensor connector to its support,
  - the earth cable on the body.
- ❑ Torque tighten the **earth cable nut on the body (8 N.m)**.

- ❑ Refit:
  - the fuel tank heat shield,
  - the heat shield pins.
- ❑ Reconnect the fuel level sensor module connector.
- ❑ Refit the access flap for the fuel level sensor module on the floor.
- ❑ Refit the rear bench seat base (see) (76A, Rear seat frames and runners).
- ❑ Connect the battery (see **Battery: Removal - Refitting**) (80A, Battery).

Fuel level sensor module: Removal - Refitting

K4M or K9K

Special tooling required	
Car. 1363	Set of trim removal levers.
Mot. 1397	Universal spanner for removing fuel gauge nuts.

IMPORTANT

During this operation, be sure to:

- refrain from smoking or bringing red hot objects close to the working area,
- be careful of fuel splashes when disconnecting the union.

IMPORTANT

Wear goggles with side protectors for this operation.

IMPORTANT

Wear leaktight gloves (Nitrile type) for this operation.

WARNING

To avoid any corrosion or damage, protect the areas on which fuel is likely to run.

REMOVAL

I - REMOVAL PREPARATION OPERATION

❑ Disconnect the battery (see **Battery: Removal - Refitting**) (80A, Battery).

❑ Tilt the rear bench seat base.

II - REMOVAL OPERATION

❑ Remove the blanking cover from the inspection flap using the tool **(Car. 1363)**.

Note:

Make provisions for the flow of fuel from the fuel supply and return pipes.

K9K

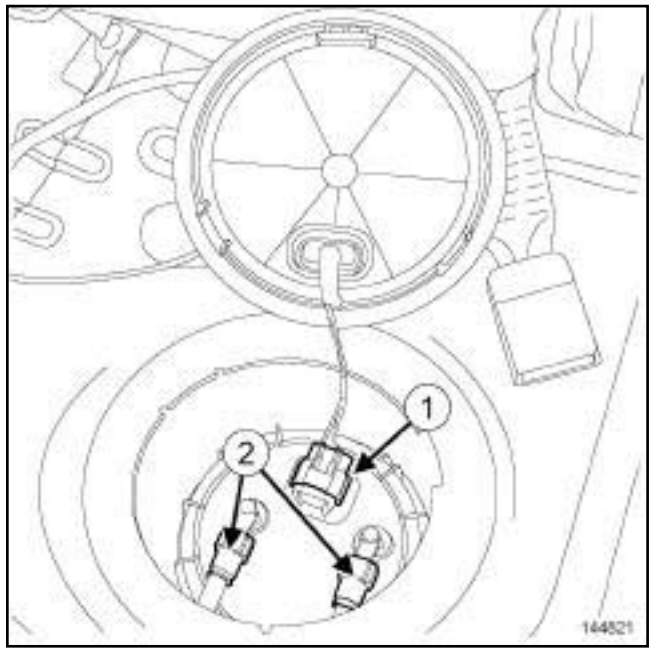

144821

❑ Disconnect:

- the connector (**1**) ,
- the unions (**2**) .

K4M or K9K

K4M

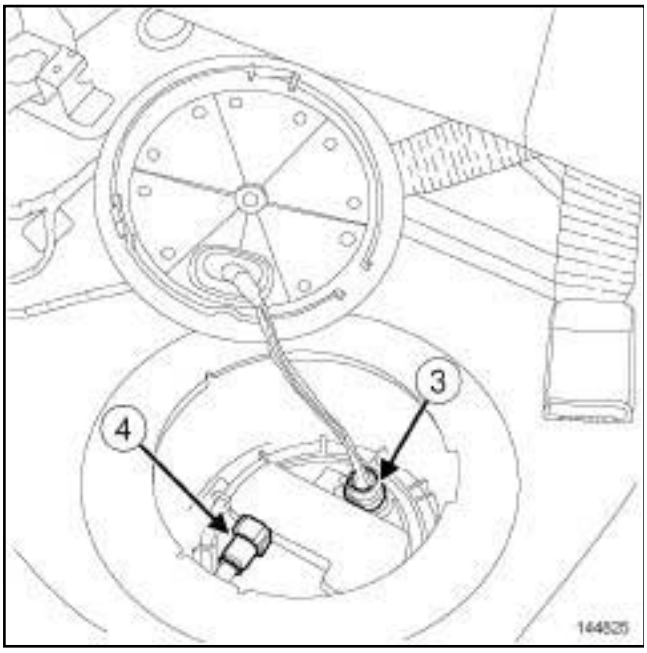

144825

❑ Disconnect:

- the connector (**3**) ,
- union (**4**) .

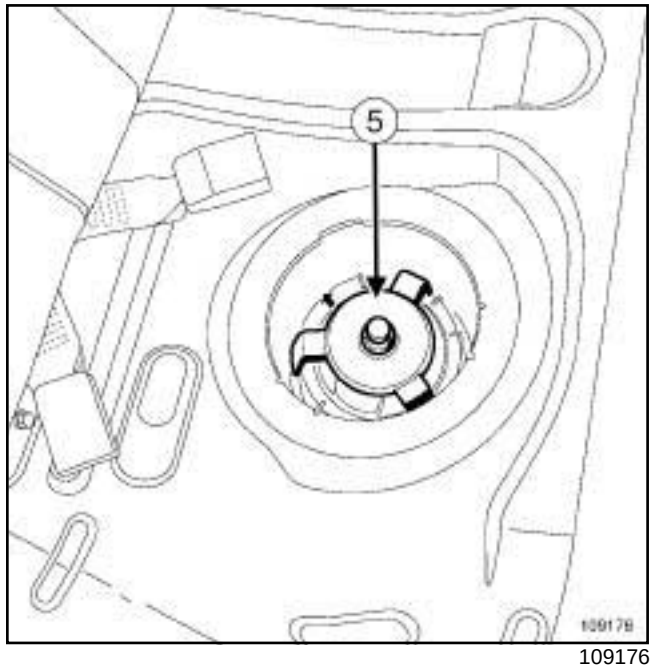

109176

❑ Remove the nut from the fuel level sensor module using the tool **(Mot. 1397)** (**5**) ,

❑ Let the fuel drain from the fuel level sensor module.

❑ Remove:

- the fuel level sensor module, taking care not to damage the float,
- the fuel level sensor module seal.

WARNING
To prevent the tank from deforming, refit the fuel sender unit nut to the tank well immediately.

REFITTING

I - REFITTING PREPARATION OPERATION

❑ **parts always to be replaced: Fuel level sensor module nut**

❑ **parts always to be replaced: Fuel level sensor module seal**

K4M or K9K

II - REFITTING OPERATION

K4M

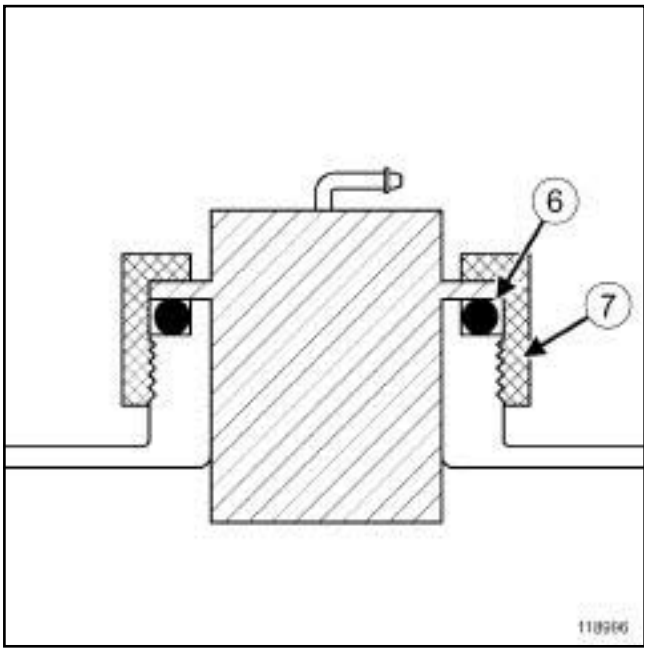

118996

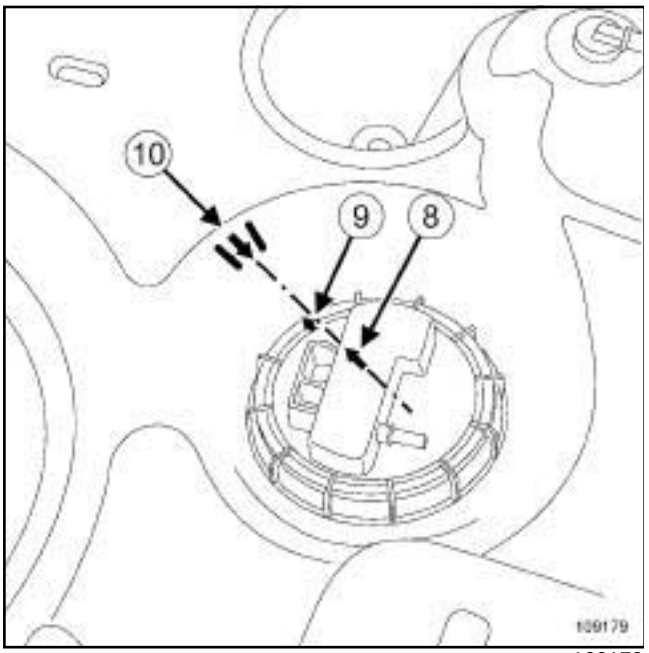

109179

❑ Position:

- the new seal (**6**) in the neck correctly,
- the fuel level sensor module on the fuel tank. A lug on the fuel level sensor module and a recess in the fuel tank ensure correct positioning in the fuel tank; the mark (**8**) on the fuel level sensor module must be positioned opposite the mark on the fuel tank (**10**) .

❑ Press the fuel level sensor module by hand (to prevent the seal from moving) and finger tighten the nut on the fuel tank.

❑ Then use the tool **(Mot. 1397)** to tighten the nut of the fuel level sensor module to the mark on the fuel tank.

K4M

❑ Tighten the nut ***(7)*** until the mark ***(9)*** on the nut is located opposite the mark ***(10)*** on the fuel tank using the tool **(Mot. 1397)**.

❑ Proceed in the reverse order to removal.

Suspended engine mounting: Tightening torque

K9K

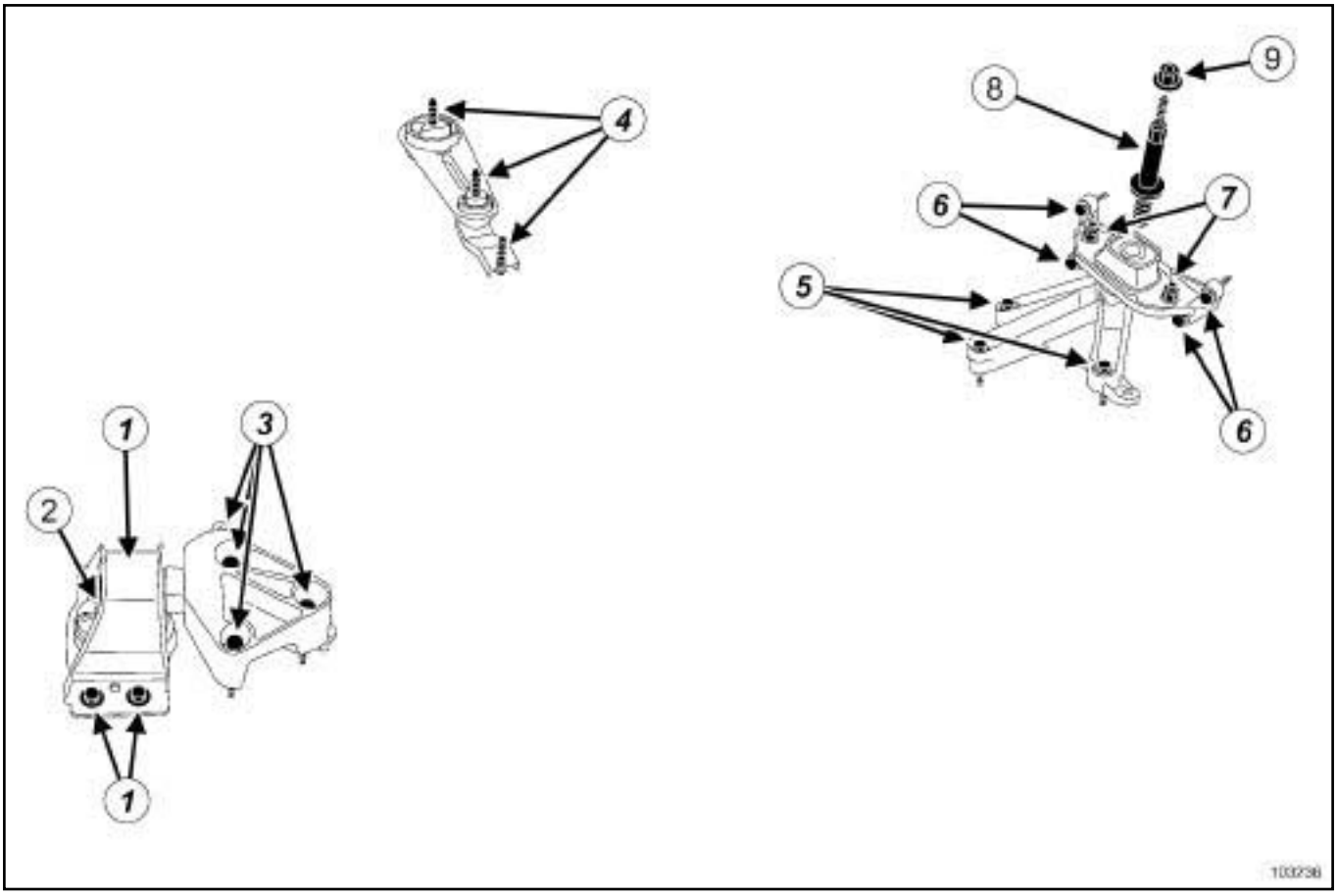

103236

No.	Description	Tightening torque (N.m)
(**1**)	Right-hand suspended mounting support bolt on the body	**62**
(**3**)	Right-hand suspended mounting support bolt on the engine	**62**
(**5**)	Left-hand mounting bolt on the gearbox	**62**
(**6**)	Left-hand rubber pad mounting bolt on the body	**21**
(**7**)	Left-hand rubber pad bolt on the mounting	**105**
(**8**)	Stud on the gearbox mounting	**180**
(**9**)	Gearbox mounting nut on the rubber pad	**62**

No.	Description	Tightening torque (N.m)
(4)	Engine tie-bar bolt	**180**

Special tooling required	
Mot. 1453	Engine anchorage support with multiple adjustments and retaining straps.

Tightening torques ▽	
bolts mounting the left-hand suspended mounting on the gearbox	**62 N.m**
bolt of the power-assisted steering pipe on the left-hand suspended mounting	**21 N.m**
stud on the gearbox support	**180 N.m**
left-hand rubber pad mounting bolts on the body	**21 N.m**
rubber pad nuts on the left-hand suspended mounting	**105 N.m**
nut of the gearbox support on the rubber pad	**62 N.m**

REMOVAL

I - REMOVAL PREPARATION OPERATION

❑ Position the vehicle on a two-post lift (see **Vehicle: Towing and lifting**) (02A, Lifting equipment).

❑ Remove:

- the air inlet sleeve,
- the battery (see **Battery: Removal - Refitting**) (80A, Battery),
- the battery tray,
- the injection computer (see **17B**, **Petrol injection**, **Petrol injection computer: Removal - Refitting**, page **17B-7**) ,
- the engine undertray.

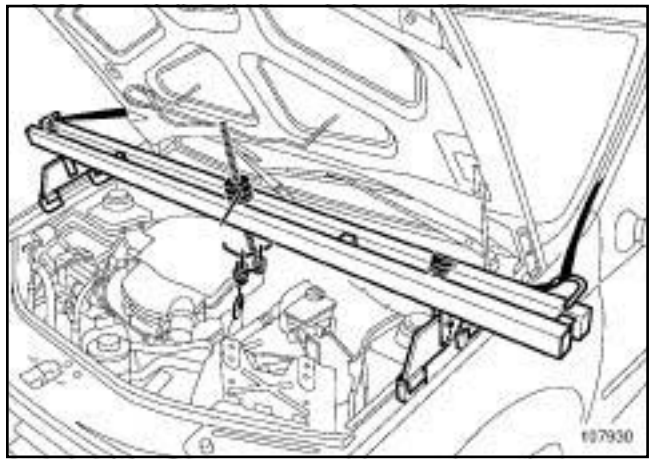

107930

❑ Fit the engine support tool **(Mot. 1453)** with the retaining belt, taking the flywheel end lifting eye as an anchoring point.

❑ Mark the position of the left-hand suspended engine mounting on the body.

II - REMOVAL OPERATION

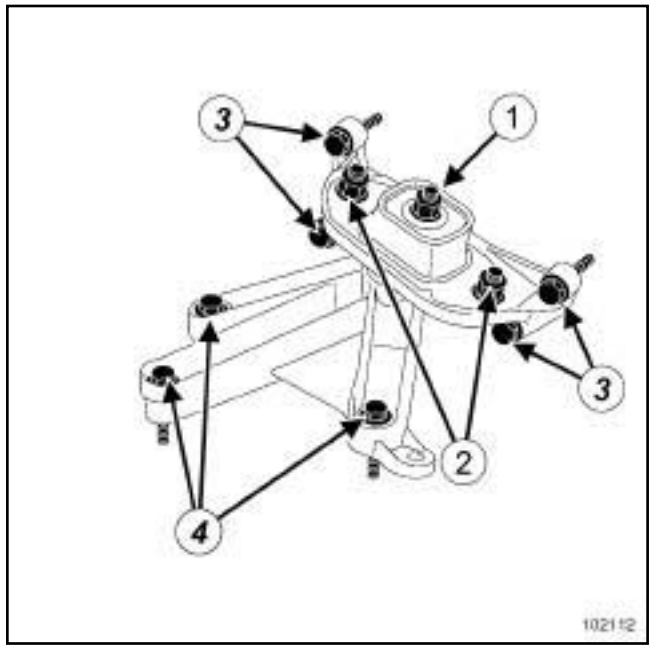

102112

❑ Remove the nut (**1**) from the gearbox support on the rubber pad.

❑ Strike the gearbox stud with a copper hammer to separate the engine and gearbox assembly from the body.

❑ Remove:

- the nuts (**2**) from the rubber pad,
- the rubber pad,

- the bolts (**3**) from the left-hand rubber pad mounting on the body,
- the left-hand rubber pad mounting,
- the power-assisted steering pipe bolt on the suspended mounting (if fitted to the vehicle),
- the left-hand suspended mounting bolts (**4**) on the gearbox,
- the left-hand suspended mounting on the gearbox.

REFITTING

I - REFITTING PREPARATION OPERATION

❑ Always replace the self-locking nuts.

II - REFITTING OPERATION

❑ Refit:

- the left-hand suspended mounting on the gearbox,
- the power-assisted steering pipe bolt on the suspended mounting (if fitted to the vehicle),
- the left-hand rubber pad mounting,
- the rubber pad,
- the rubber pad nuts on the left-hand suspended mounting,
- the gearbox support nut on the rubber pad.

❑ Torque tighten:

- the **bolts mounting the left-hand suspended mounting on the gearbox (62 N.m)**,
- the **bolt of the power-assisted steering pipe on the left-hand suspended mounting (21 N.m)**,
- the **stud on the gearbox support (180 N.m)**,
- the **left-hand rubber pad mounting bolts on the body (21 N.m)**,
- the **rubber pad nuts on the left-hand suspended mounting (105 N.m)**,
- the **nut of the gearbox support on the rubber pad (62 N.m)**.

III - FINAL OPERATION

❑ Remove the engine support tool **(Mot. 1453)**.

❑ Refit:

- the engine undertray,
- the injection computer (see **17B**, **Petrol injection**, **Petrol injection computer: Removal - Refitting**, page **17B-7**) ,
- the battery tray,
- the battery (see **Battery: Removal - Refitting**) (80A, Battery),
- the air intake sleeve.

K9K

Special tooling required	
Mot. 1453	Engine anchorage support with multiple adjustments and retaining straps.

Tightening torques ▽	
right-hand suspended engine mounting bolts on the engine	**62 N.m**
right-hand suspended engine mounting bolts on the body	**62 N.m**

REMOVAL

I - REMOVAL PREPARATION OPERATION

❑ Remove the front engine cover.

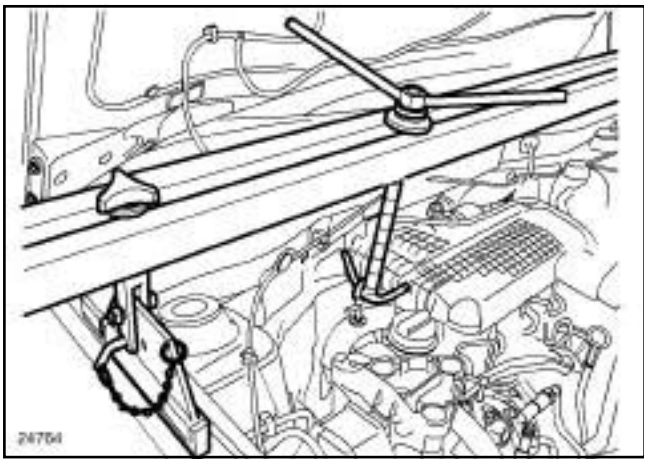

24764

❑ Fit the engine support tool **(Mot. 1453)** with the retaining belt, taking the timing end lifting eye as an anchoring point.

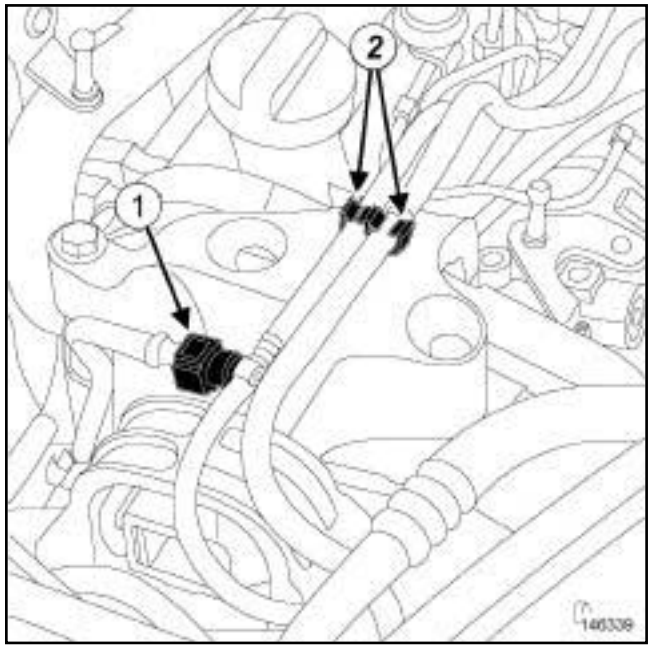

146339

❑ Disconnect the fuel pipe at (**1**) ,

❑ Insert the blanking plugs.

❑ Unclip the fuel pipes at (**2**) ,

❑ Move the fuel pipes aside.

K9K

II - REMOVAL OPERATION

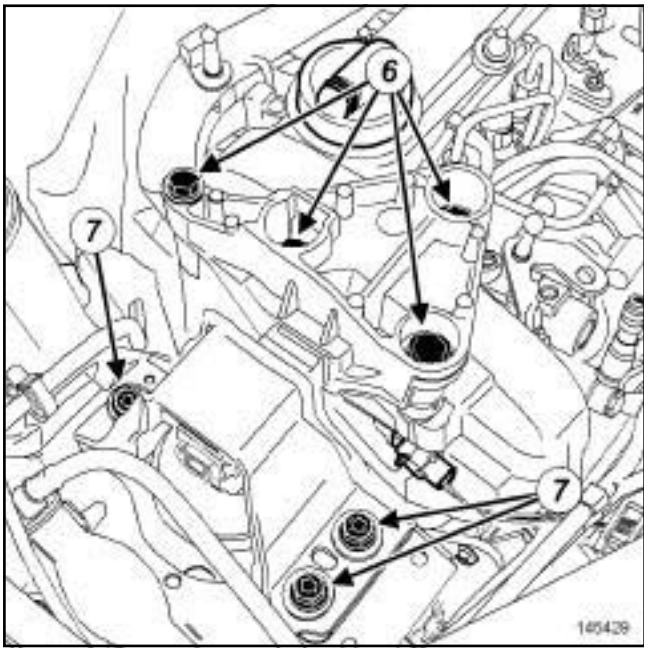

145429

❑ Mark the position of the right-hand suspended engine mounting on the body.

❑ Remove:

- the bolts (**6**) from the right-hand suspended engine mounting on the engine,
- the right-hand suspended engine mounting bolts (**7**) on the body,
- the right-hand suspended engine mounting.

REFITTING

I - REFITTING OPERATION

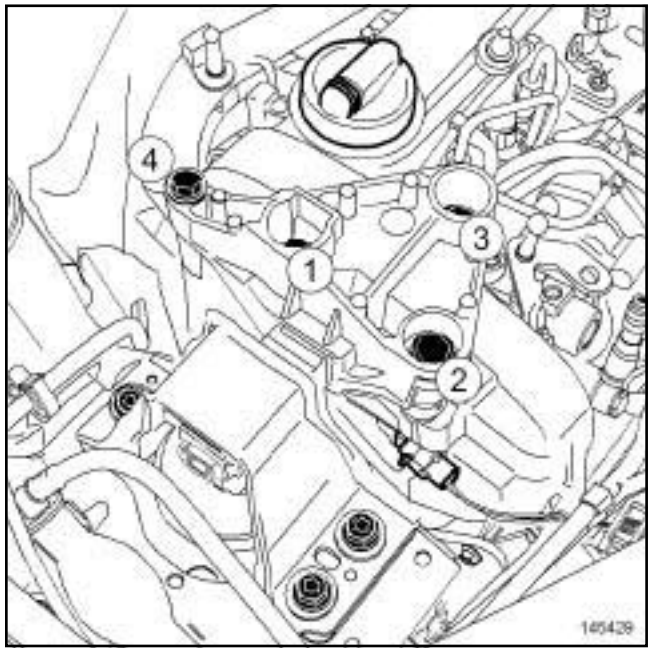

145429

❑ Refit:

- the right-hand suspended engine mounting observing the marks made on the body during removal,
- the right-hand suspended engine mounting bolts on the engine,
- the right-hand suspended engine mounting bolts on the body.

❑ Torque tighten in order the **right-hand suspended engine mounting bolts on the engine (62 N.m)**.

❑ Torque tighten the **right-hand suspended engine mounting bolts on the body (62 N.m)**.

II - FINAL OPERATION

❑ Position the fuel pipes.

❑ Clip on the fuel pipes at ***(2)*** .

❑ Remove the blanking plugs.

❑ Connect the fuel pipe at ***(1)*** .

❑ Remove the engine support tool **(Mot. 1453)** and the retaining strap.

❑ Refit the engine cover.

K4M

Special tooling required	
Mot. 1453	Engine anchorage support with multiple adjustments and retaining straps.

Tightening torques ▽	
right-hand suspended engine mounting bolts on the engine	**62 N.m**
right-hand suspended engine mounting bolts on the body	**62 N.m**

REMOVAL

I - REMOVAL PREPARATION OPERATION

❑ Remove the front engine cover.

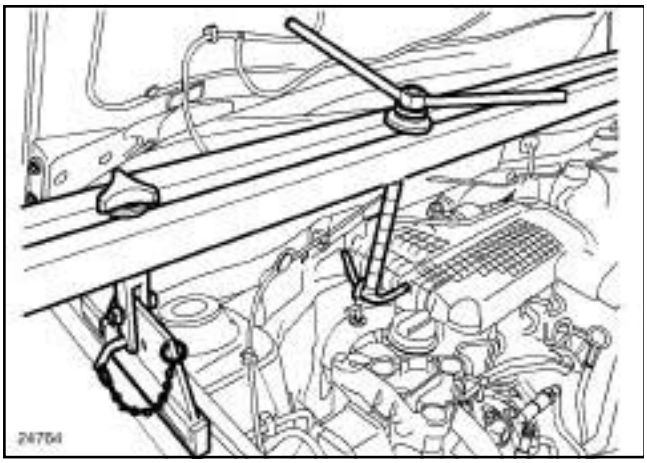

24764

❑ Fit the engine support tool **(Mot. 1453)** with the retaining belt, taking the timing end lifting eye as an anchoring point.

II - REMOVAL OPERATION

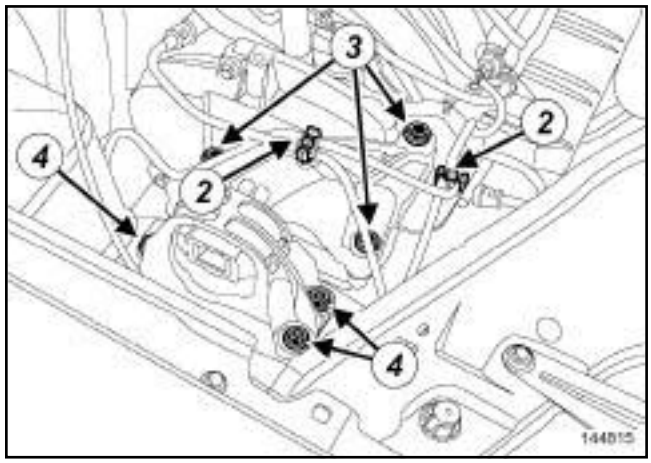

144815

❑ Detach at (**2**) :

- the fuel supply pipe,
- the petrol vapour recirculation pipe.

❑ Mark the position of the right-hand suspended engine mounting on the body.

❑ Remove:

- the bolts ***(3)*** from the right-hand suspended engine mounting on the engine,
- the right-hand suspended engine mounting bolts ***(4)*** on the body,
- the right-hand suspended engine mounting.

REFITTING

I - REFITTING OPERATION

❑ Refit:

- the right-hand suspended engine mounting observing the marks made on the body during removal,
- the right-hand suspended engine mounting bolts on the engine,
- the right-hand suspended engine mounting bolts on the body.

❑ Torque tighten:

- the **right-hand suspended engine mounting bolts on the engine (62 N.m)**,
- the **right-hand suspended engine mounting bolts on the body (62 N.m)**.

❑ Clip:

- the fuel supply pipe,
- the petrol vapour recirculation pipe.

K4M

II - FINAL OPERATION

- ❑ Remove the engine support tool **(Mot. 1453)**.
- ❑ Refit the engine cover.

Tightening torques ▽	
rear suspended engine mounting bolt on the subframe	**105 N.m**
rear suspended engine mounting bolts on the gearbox	**105 N.m**

REMOVAL

I - REMOVAL PREPARATION OPERATION

❏ Position the vehicle on a two-post lift (see **Vehicle: Towing and lifting**) (02A, Lifting equipment).

❏ Remove the engine undertray.

II - REMOVAL OPERATION

JR5

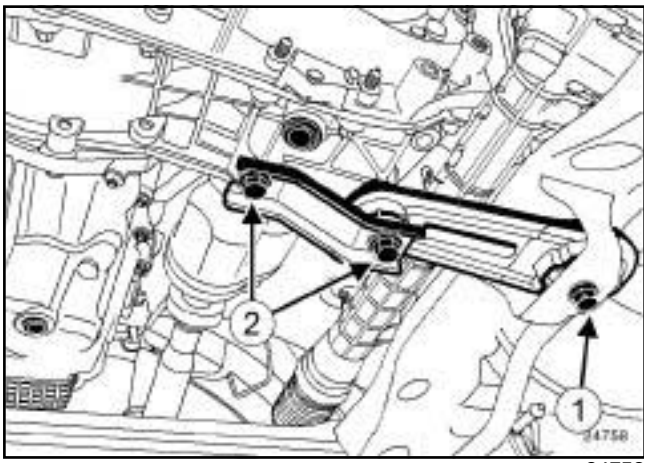

24758

❏ Remove:

- the rear suspended engine mounting bolt (**1**) from the subframe,
- the rear suspended engine bolts (**2**) from the gearbox,
- the rear suspended engine mounting.

REFITTING

I - REFITTING OPERATION

❏ Refit:

- the rear suspended engine mounting,
- the rear suspended engine mounting bolts.

❏ Torque tighten:

- the **rear suspended engine mounting bolt on the subframe (105 N.m)**,
- the **rear suspended engine mounting bolts on the gearbox (105 N.m)**.

II - FINAL OPERATION

❏ Refit the engine undertray.

❏ Tighten the engine undertray bolts.

RENAULT

2 Transmission

20A CLUTCH

21A MANUAL GEARBOX

29A DRIVESHAFTS

X79

NOVEMBER 2009 **EDITION ANGLAISE**

"The repair procedures given by the manufacturer in this document are based on the technical specifications current when it was prepared.

The procedures may be modified as a result of changes introduced by the manufacturer in the production of the various component units and accessories from which the vehicles are constructed".

All rights reserved by Renault.

Copying or translating, in part or in full, of this document or use of the service part reference numbering system is forbidden without the prior written authority of Renault.

© Renault s.a.s 2007

DUSTER - Chapitre 2

Contents

Pages

20A CLUTCH

Clutch: Precautions for the repair 20A-1

Clutch: Specifications 20A-2

Pressure plate - Disc: Removal - Refitting 20A-4

Clutch thrust bearing: Removal - Refitting 20A-6

21A MANUAL GEARBOX

Manual gearbox oils: Draining - Filling 21A-1

Differential output seal: Removal - Refitting 21A-2

Manual gearbox: Removal - Refitting 21A-4

5th gear housing: Removal - Refitting 21A-18

5th gear sprockets and synchronisers: Removal - Refitting 21A-21

Input shaft lip seal: Removal - Refitting 21A-25

Reverse gear switch: Removal - Refitting 21A-26

29A DRIVESHAFTS

Front left-hand driveshaft: Removal - Refitting 29A-1

Front right-hand driveshaft: Removal - Refitting 29A-4

Relay shaft bearing: Removal - Refitting 29A-6

Front driveshaft gaiter, wheel side: Removal - Refitting 29A-7

Front right-hand driveshaft gaiter, gearbox side: Removal - Refitting 29A-11

Front left-hand driveshaft gaiter, gearbox side: Removal - Refitting 29A-16

Clutch: Precautions for the repair

Before removing the clutch, check:

- The direction of fitting for the clutch plate.

Before refitting the clutch, check:

- The flywheel friction track (no scratches or blue stains),
- The crankshaft bearing (no sticking),
- The engine and gearbox seals (replace if necessary),
- The sliding action of the clutch plate on the output shaft,
- The guide of the thrust bearing and clutch fork (no wear or scratches).

WARNING

To prevent the clutch from juddering or slipping, do not grease the output shaft or the clutch plate hub.

During refitting:

Check the direction of the clutch plate.

Centre the clutch plate using theor.

Gradually torque tighten the clutch pressure plate bolts.

After refitting, check:

- The clutch play (for a cable operated vehicle),
- Bleeding of the hydraulic circuit (for vehicles with hydraulic controls).

K4M or K9K

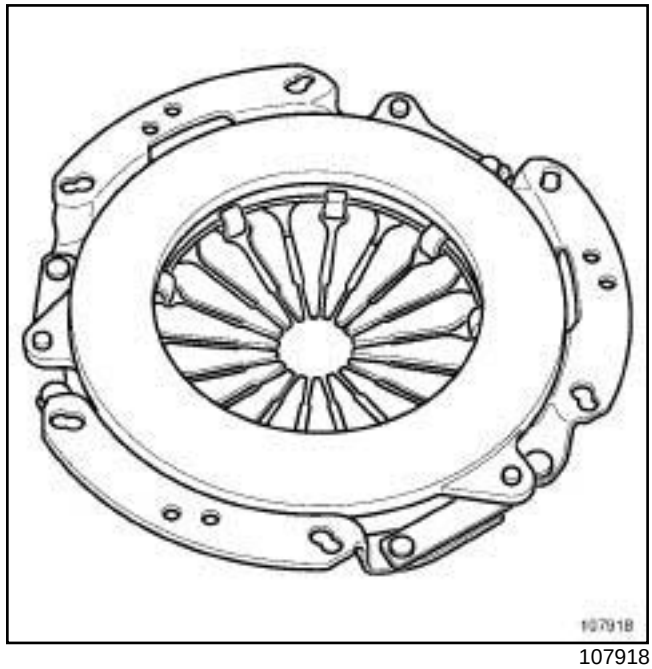

107918

Drive plate

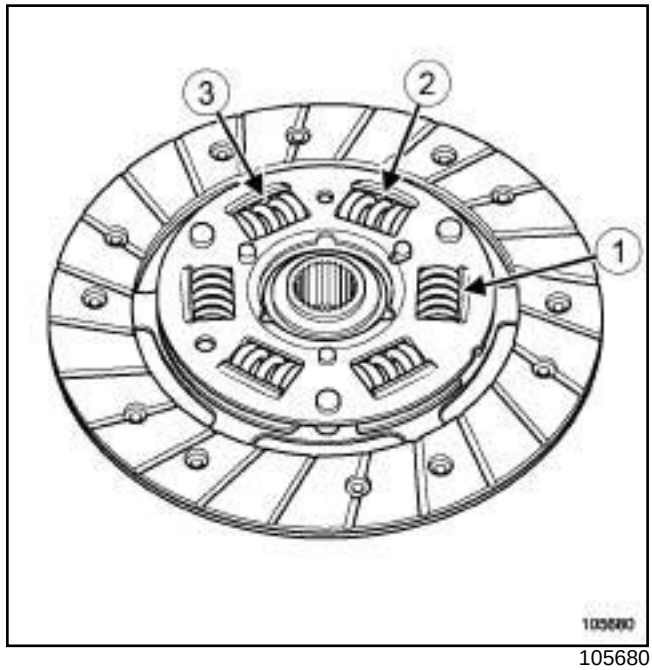

105680

Plate external diameter: **200 mm**

Plate thickness: **7.5 mm**

Number of splines: **26**

Spring colour (**1**) : **Grey**

Spring colour (**2**) : **Green**

Spring colour (**3**) : **Lilac blue**

K4M

Pressure plate

K4M or K9K

K9K

Pressure plate

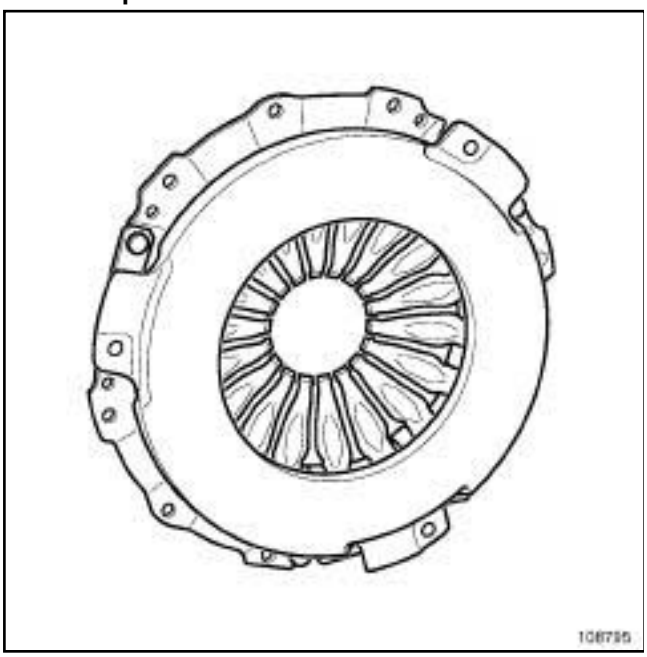

108795

Drive plate

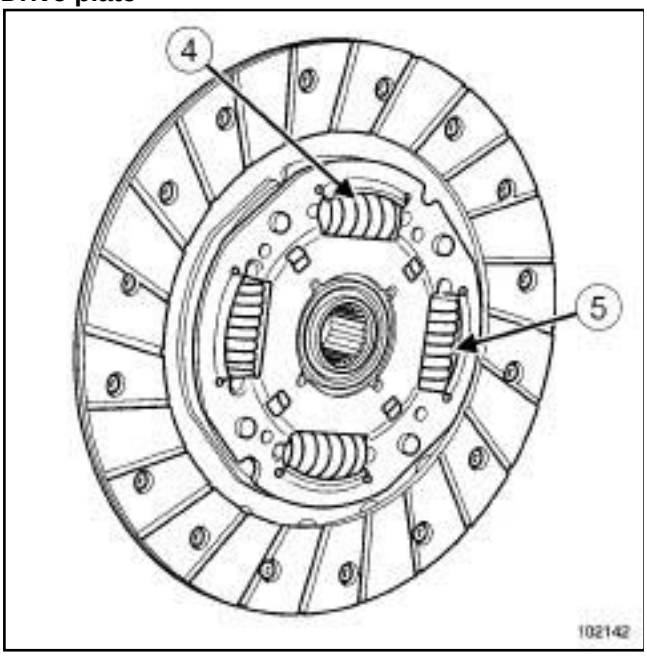

102142

Plate outer diameter: **215 mm**.

Plate thickness: **6.9 mm**.

Number of grooves: **26**.

Colours of the springs (**4**) : Red and black.

Colour of spring (**5**) : Grey.

K4M

IMPORTANT

To avoid all risk of damage to the systems, apply the safety and cleanliness instructions and operation recommendations before carrying out any repair:

- (see **20A**, **Clutch**, **Clutch: Precautions for the repair**, page **20A-1**) .

REMOVAL

I - REMOVAL PREPARATION OPERATION

❑ Remove the gearbox (see **21A**, **Manual gearbox**, **Manual gearbox: Removal - Refitting**, page **21A-4**) .

II - REMOVAL OPERATION

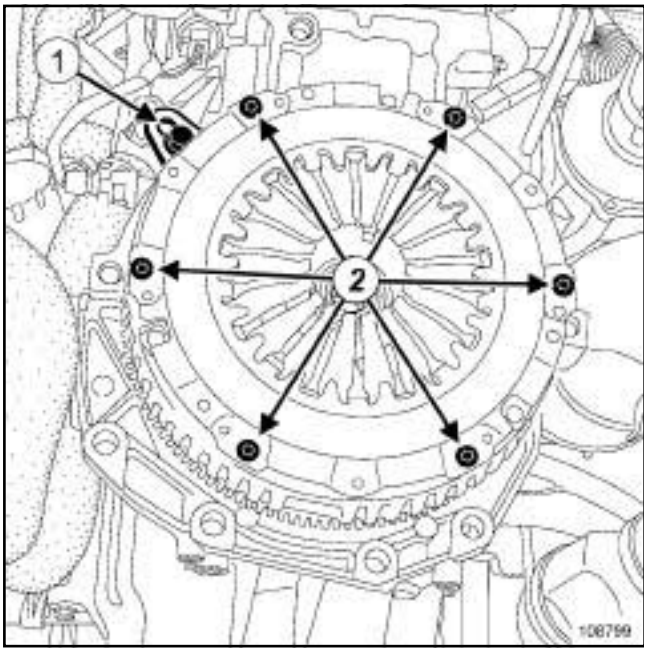

108799

❑ Lock the engine using the (**1**) .

❑ Remove:

- the clutch pressure plate bolts (**2**) .
- the clutch pressure plate,
- the friction plate.

REFITTING

I - REFITTING PREPARATION OPERATION

❑ Replace any faulty parts.

❑ Use **SURFACE CLEANER** (see **Vehicle: Parts and consumables for the repair**) (04B, Consumables - Products) to clean and degrease:

- the flywheel friction face,
- the clutch shaft splines.

II - REFITTING OPERATION

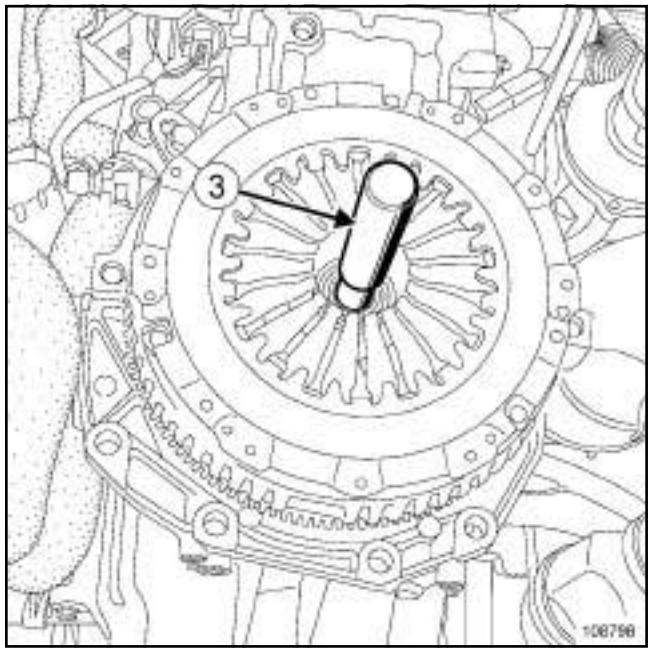

108798

❑ Position the clutch plate.

❑ Centre the clutch plate using theor (**3**) .

❑ Gradually tighten the clutch pressure plate bolts radially.

❑ Remove the tool.

III - FINAL OPERATION

❑ Refit the gearbox (see **21A**, **Manual gearbox**, **Manual gearbox: Removal - Refitting**, page **21A-4**) .

K9K

Tightening torques ▽	
pressure plate bolts	**15 N.m**

IMPORTANT

To avoid all risk of damage to the systems, apply the safety and cleanliness instructions and operation recommendations before carrying out any repair:

- (see **20A**, **Clutch**, **Clutch: Precautions for the repair**, page **20A-1**) .

REMOVAL

I - REMOVAL PREPARATION OPERATION

❑ Remove the gearbox (see **21A**, **Manual gearbox**, **Manual gearbox: Removal - Refitting**, page **21A-4**) .

II - REMOVAL OPERATION

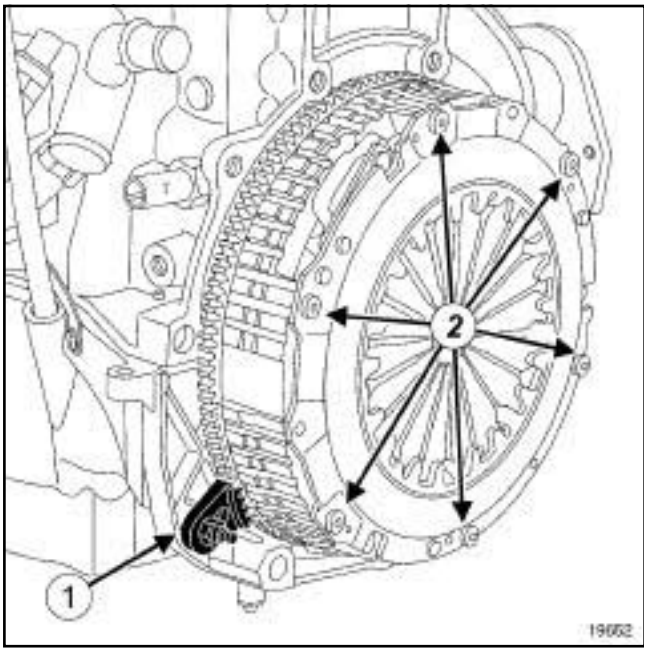

19652

❑ Lock the engine using the (**1**) .

❑ Remove:

- the clutch pressure plate bolts (**2**) .
- the clutch pressure plate,
- the friction plate.

REFITTING

I - REFITTING PREPARATION OPERATION

❑ Replace any faulty parts.

❑ Use **SURFACE CLEANER** (see **Vehicle: Parts and consumables for the repair**) (04B, Consumables - Products) to clean and degrease:

- the flywheel friction face,
- the clutch shaft splines.

WARNING
Do not grease the clutch shaft splines.

II - REFITTING OPERATION

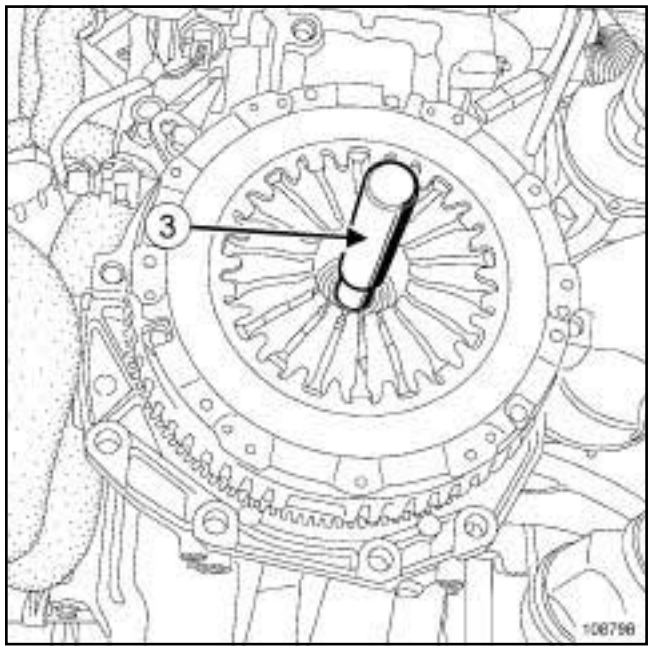

108798

❑ Position the clutch plate.

❑ Centre the clutch plate using theor (**3**) .

❑ Tighten the clutch pressure plate mounting bolts gradually and radially.

❑ Torque tighten the clutch **pressure plate bolts (15 N.m)** in a radial pattern.

❑ Remove the tool.

III - FINAL OPERATION

❑ Refit the gearbox (see **21A**, **Manual gearbox**, **Manual gearbox: Removal - Refitting**, page **21A-4**) .

JR5

Tightening torques ▽	
clutch thrust bearing bolts on the clutch housing	**21 N.m**

The thrust bearing is connected to the clutch slave cylinder.

REMOVAL

I - REMOVAL PREPARATION OPERATION

❏ Drain the brake reservoir using a syringe to remove the clutch thrust bearing and control.

❏ Remove the gearbox (see **21A**, **Manual gearbox**, **Manual gearbox: Removal - Refitting**, page **21A-4**) .

II - REMOVAL

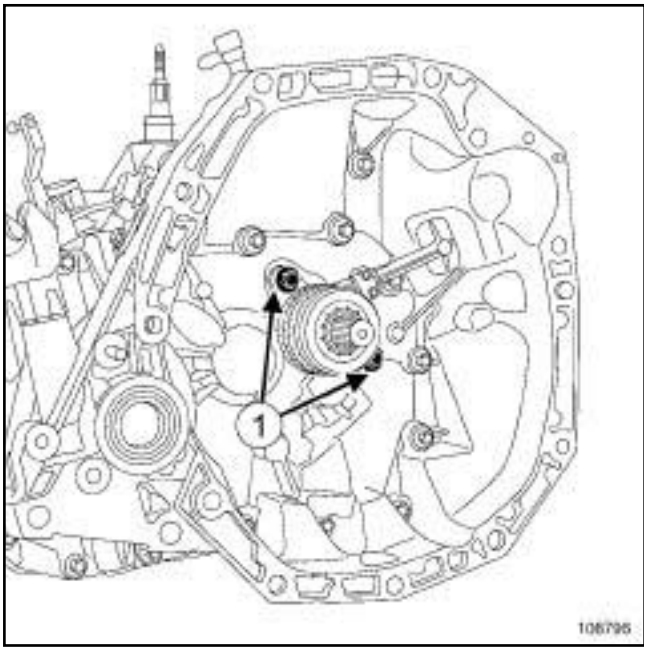

108796

❏ Remove the two clutch thrust bearing bolts (**1**) on the clutch housing.

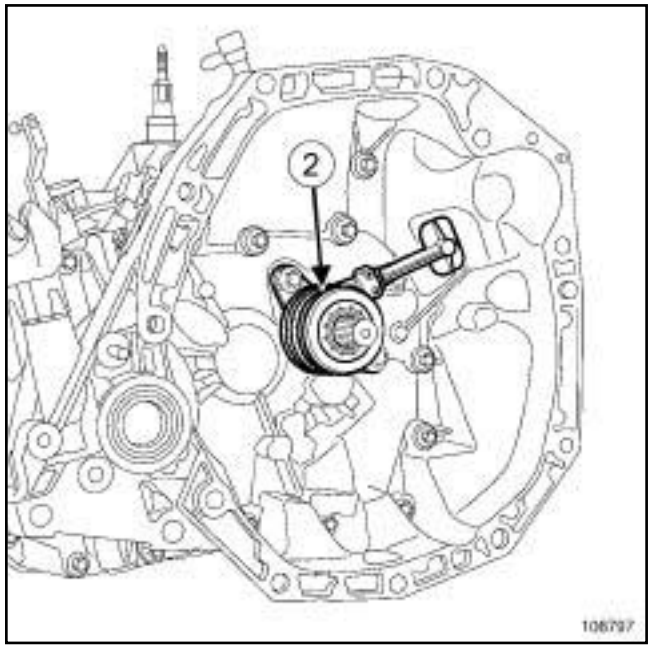

108797

❏ Remove the clutch thrust bearing (**2**) .

REFITTING

I - REFITTING PREPARATION OPERATION

❏ Always replace the clutch thrust bearing.

❏

> Note:
>
> To obtain optimum bleeding, prefill the clutch thrust bearing when refitting.

II - REFITTING

❏ Refit a new clutch thrust bearing.

❏ Torque tighten the **clutch thrust bearing bolts on the clutch housing (21 N.m)**.

> **WARNING**
>
> To avoid damaging the slave cylinder, do not coat the gearbox output shaft with grease.
>
> Never operate the system while the slave cylinder is removed.

III - FINAL OPERATION

❏ Refit the gearbox (see **21A**, **Manual gearbox**, **Manual gearbox: Removal - Refitting**, page **21A-4**) .

❏ Bleed the clutch control (see **Clutch circuit: Bleed**) (37A, Mechanical component controls).

Manual gearbox oils: Draining - Filling

JR5

Tightening torques ▽	
drain plug	**22 N.m**

Type of gearbox	Capacity (litres)
JH1	2.8
JH3	
JR5	2.5

DRAINING

❑ Position the vehicle on a two-post lift (see **Vehicle: Towing and lifting**) (02A, Lifting equipment).

❑ Remove:

- the engine undertray bolts,
- the engine undertray.

❑ Fit the oil recovery tray under the gearbox.

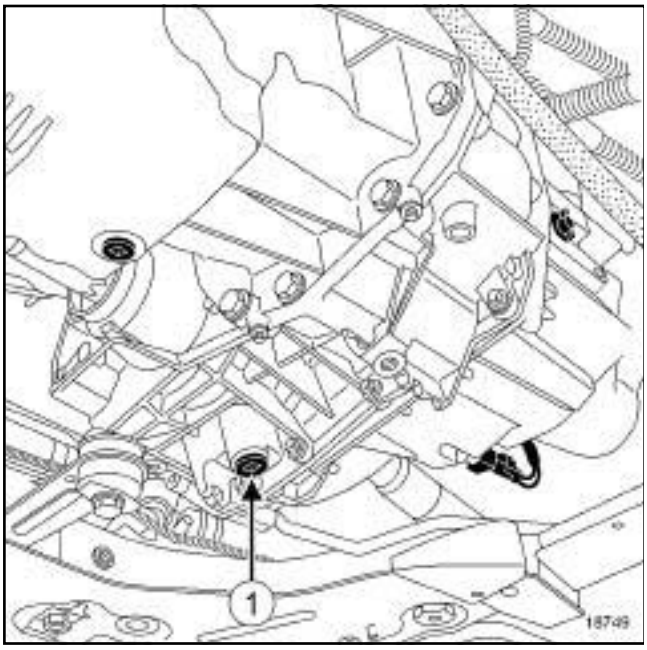

18749

❑ Remove the drain plug (**1**) .

❑ Allow the oil to flow into the oil recovery tray.

FILLING

❑ It is essential to replace the drain plug seal.

❑ Refit the drain plug fitted with a new seal.

❑ Torque tighten the **drain plug (22 N.m)**.

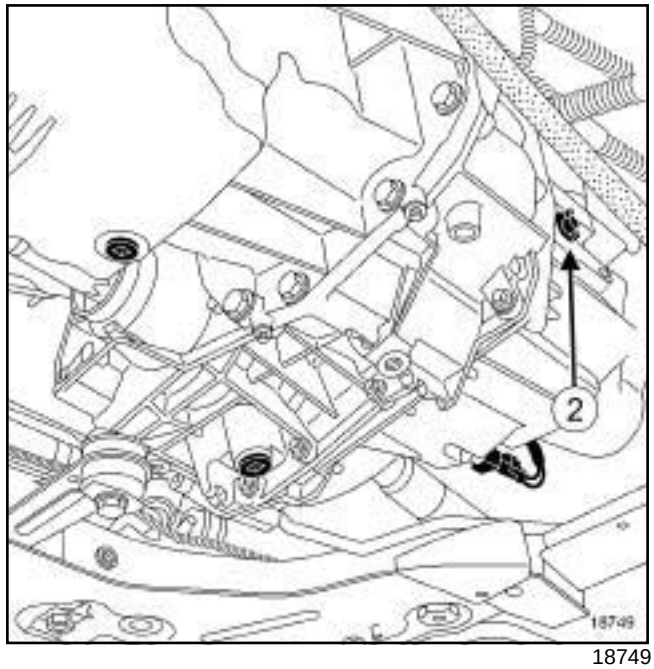

18749

❑ Remove the filler cap (**2**) .

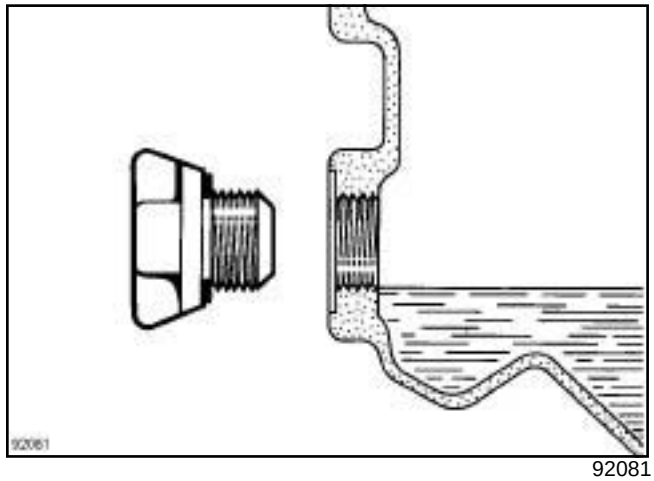

92081

❑ Fill the gearbox up to the level of the opening with oil recommended by the manufacturer (see **Manual gearbox oil: Specifications**) (Technical Note 6012A, 04, Lubricants).

❑ Refit the filler cap.

❑ Wipe any oil run-off with a cloth.

❑ Remove the oil recovery tray.

❑ Refit the engine undertray.

JR5

REMOVAL

I - REMOVAL PREPARATION OPERATION

❑ Position the vehicle on a two-post lift (see **Vehicle: Towing and lifting**) (MR 388, 02A, Lifting equipment).

❑ Remove:

- the engine undertray bolts,
- the engine undertray.

❑ Drain the gearbox (see **21A**, **Manual gearbox**, **Manual gearbox oils: Draining - Filling**, page **21A-1**) .

1 - When replacing the differential output seal on the left-hand side

❑ Remove:

- the front left-hand wheel (see **Wheel: Removal - Refitting**) (35A, Wheels and tyres),
- the front left-hand wheel driveshaft (see **29A**, **Driveshafts**, **Front left-hand driveshaft: Removal - Refitting**, page **29A-1**) (29A, Driveshafts).

2 - When replacing the differential output seal on the right-hand side

❑ Remove:

- the front right-hand wheel (see **Wheel: Removal - Refitting**) (35A, Wheels and tyres),
- the front right-hand wheel driveshaft (see **29A**, **Driveshafts**, **Front right-hand driveshaft: Removal - Refitting**, page **29A-4**) (29A, Driveshafts).

II - REMOVAL OPERATION

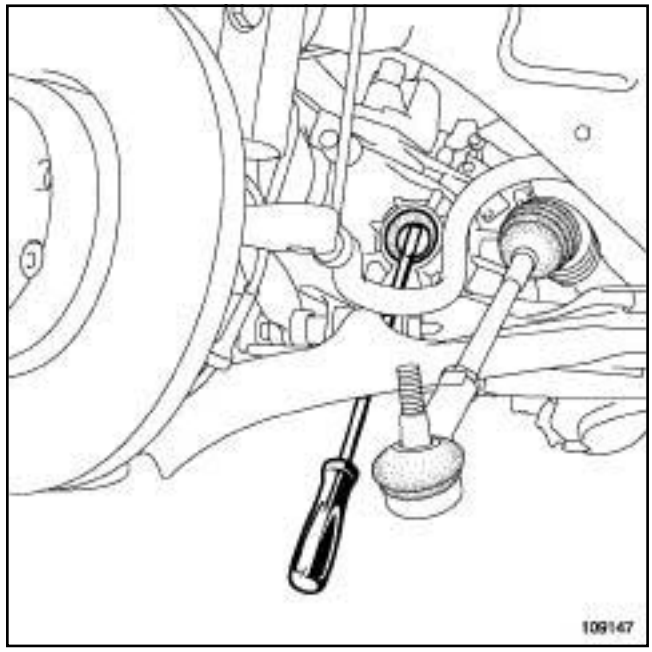

109147

❑ Tap the base of the lip seal using a drift punch and a small hammer to release it and cause it to turn in its housing.

❑ Withdraw the lip seal using a screwdriver, taking care not to damage the differential housing.

REFITTING

I - REFITTING PREPARATION OPERATION

❑ **parts always to be replaced: Differential output seal**.

JR5

II - REFITTING OPERATION

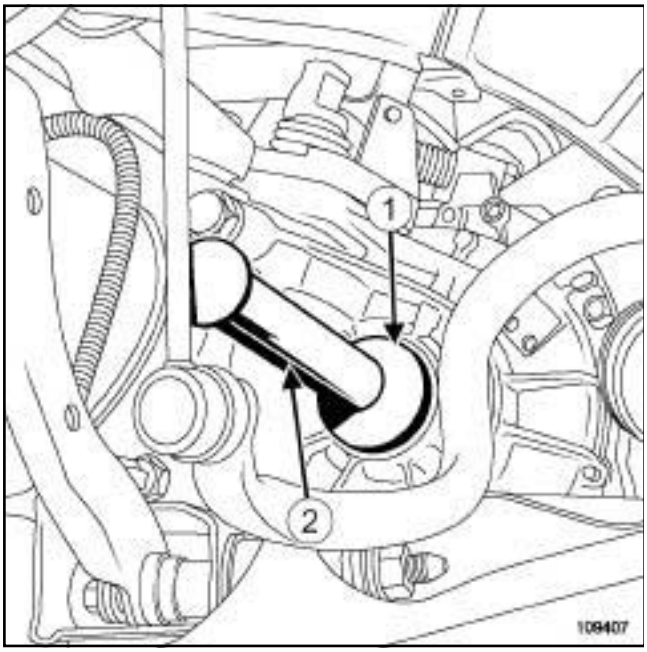

109407

- ❑ Refit the differential output seal using the tool (**1**) with **A** on the right-hand side, and **B** on the left-hand side.
- ❑ Tap the toolwith a copper hammer (**2**) to fit the new differential output seal fully.

III - FINAL OPERATION

- ❑ Proceed in the reverse order to removal.
- ❑ Top up the gearbox (see **21A**, **Manual gearbox**, **Manual gearbox oils: Draining - Filling**, page **21A-1**) .

K9K, and JR5

Special tooling required	
Mot. 1453	Engine anchorage support with multiple adjustments and retaining straps.

Equipment required
component jack

Tightening torques ▽	
stud on the engine	**8 N.m**
stud on the gearbox	**8 N.m**
gearbox stud nuts	**44 N.m**
upper and lower gearbox bolts	**44 N.m**
power-assisted steering pipe bolt on the sub-frame	**21 N.m**
power-assisted steering pipe bolt on the gearbox mounting	**21 N.m**
power-assisted steering pipe bolt on the gearbox	**21 N.m**
earth strap bolts on the gearbox	**21 N.m**
expansion bottle nuts	**8 N.m**

IMPORTANT

To avoid all risk of damage to the systems, apply the safety and cleanliness instructions and operation recommendations before carrying out any repair:

- (see **Manual gearbox: Precautions for the repair**) ,
- (see **Vehicle: Precautions for the repair**) .

REMOVAL

I - REMOVAL PREPARATION OPERATION

❑ Position the vehicle on a two-post lift (see **Vehicle: Towing and lifting**) (02A, Lifting equipment).

IMPORTANT

To prevent the vehicle from falling, lash it to the vehicle lift using a strap.

K9K, and JR5

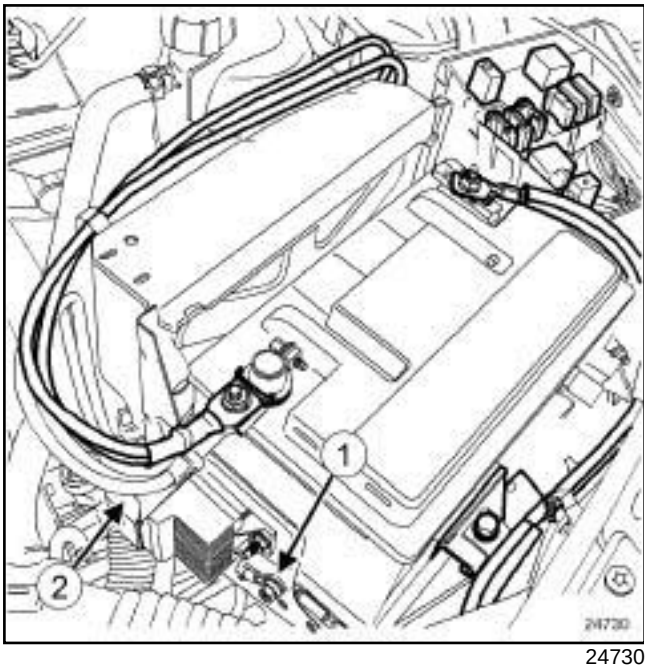

24730

❑ Remove:

- the battery (see **Battery: Removal - Refitting**) (80A, Battery),
- the battery tray,
- the earth strap nut (**1**) ,
- the injection computer (see **Diesel injection computer: Removal - Refitting**) (13B, Diesel injection),
- the wiring mounting on the injection computer support.

❑ Move the engine harness aside.

❑ Disconnect:

- the pre-postheating unit connector (**2**) ,
- the vehicle speed sensor connector.

❑ Remove:

- the vehicle speed sensor protective cover,
- the expansion bottle nuts.

❑ Move aside the expansion bottle from its support.

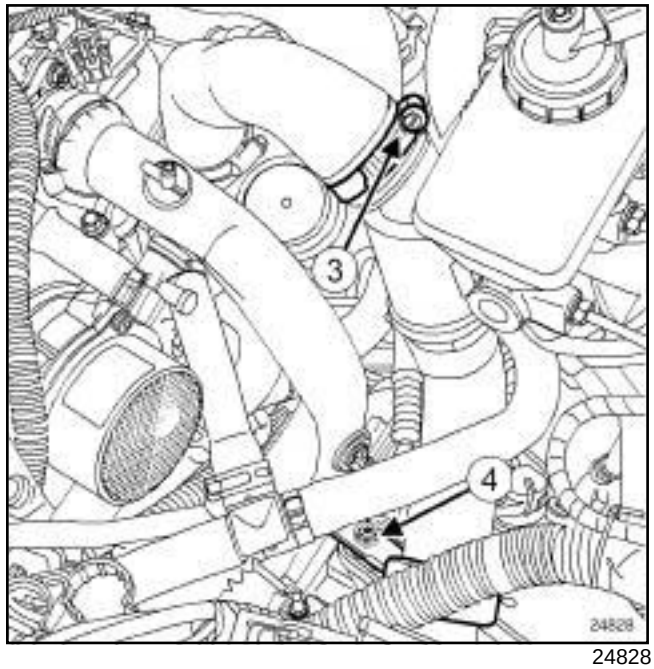

24828

❑ Remove:

- the clip (**3**) on the air pipe between the turbocharger and the intercooler,
- the air pipe nut (**4**) on the gearbox,
- the air pipe clip on the intercooler,
- the air pipe between the turbocharger and the intercooler.

❑ Remove the wiring mountings on the gearbox.

❑ Move away the engine wiring around the gearbox.

❑ Remove:

- the crankshaft position sensor (see **Crankshaft position sensor: Removal - Refitting**) (13B, Petrol injection),
- the front wheels (see **Wheel: Removal - Refitting**) (35A, Wheels and tyres).

K9K, and JR5

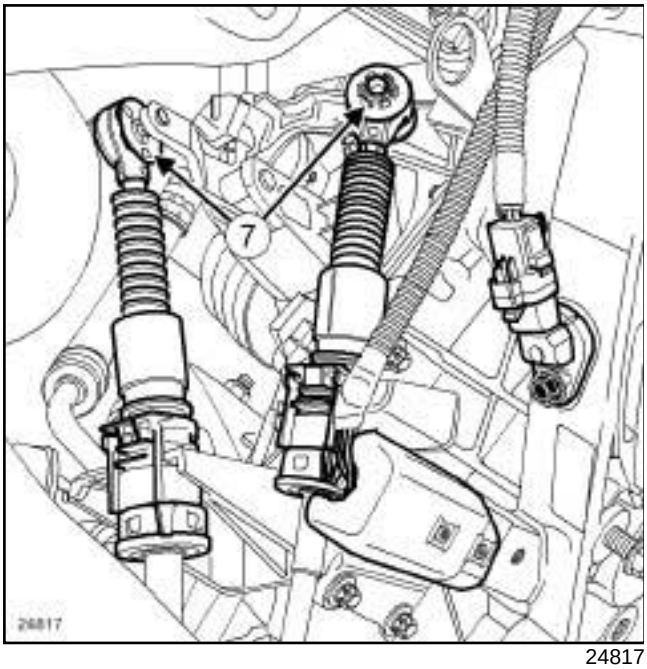

24817

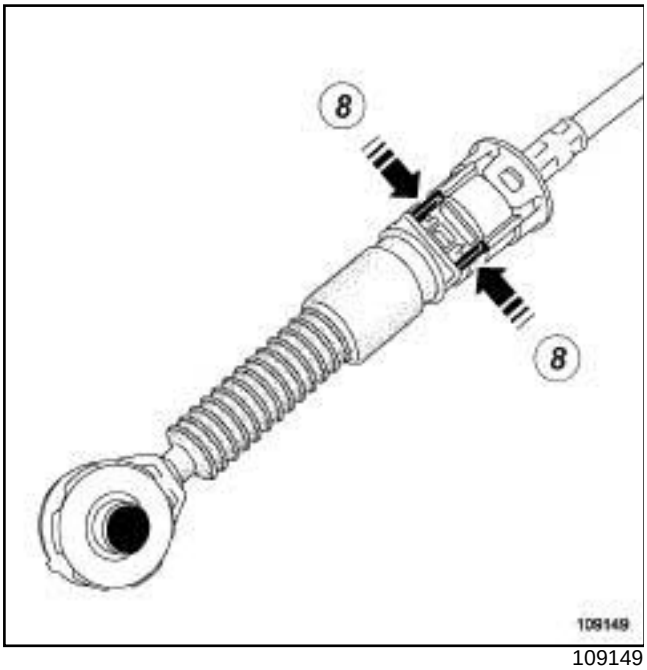

109149

❑ Unclip:

- the gear control cables on the gearbox at (**7**) ,
- the gearbox control cable sleeve stops by pressing at (**8**) .

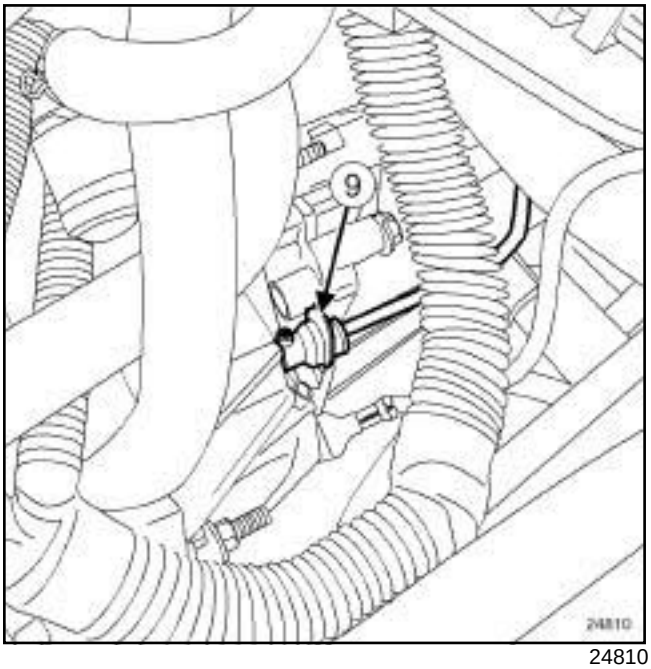

24810

❑ Press on the clip (**9**) and disconnect the clutch control pipe on the clutch slave cylinder.

> **WARNING**
> Do not pull the clip. If it is incorrectly handled in any way, the pipe will need to be replaced.

❑ Recover the brake fluid in a container.

❑ Fit blanking plugs into openings.

❑ Remove the engine undertray.

❑ Drain the gearbox (see **21A**, **Manual gearbox**, **Manual gearbox oils: Draining - Filling**, page **21A-1**) .

❑ Remove the front bumper (see **Front bumper assembly: Exploded view**) .

1 - LEFT-HAND SIDE OF VEHICLE:

❑ Remove the front left-hand wheel arch side liner.

❑ Uncouple the front left-hand driveshaft from the gearbox (see **29A**, **Driveshafts**, **Front left-hand driveshaft: Removal - Refitting**, page **29A-1**) .

K9K, and JR5

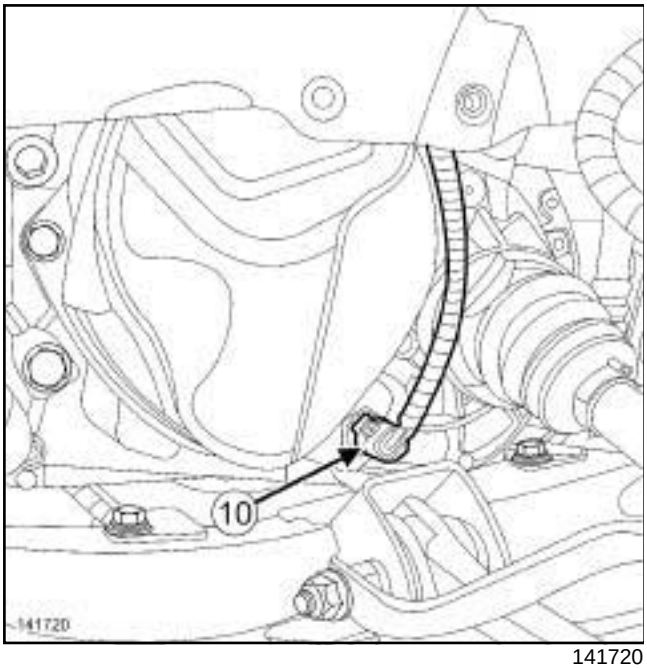

141720

❑ Disconnect the reverse gear connector (**10**) .

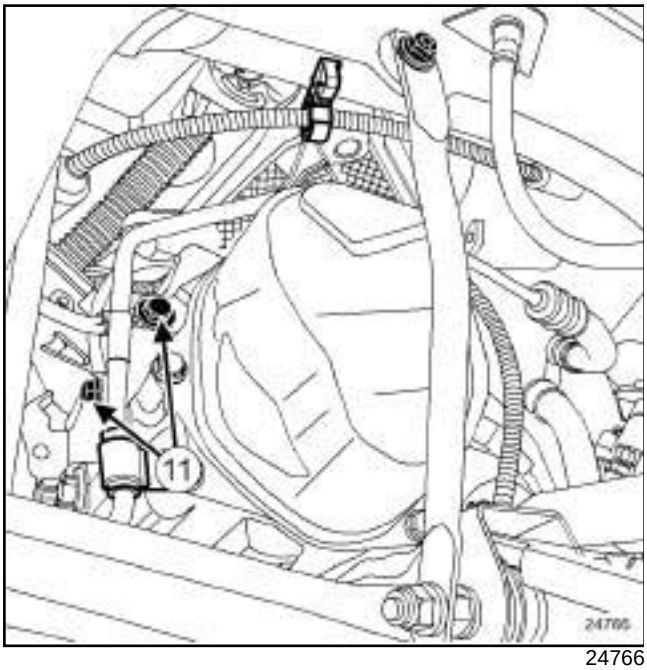

24766

❑ Remove the earth strap bolts (**11**) on the gearbox.

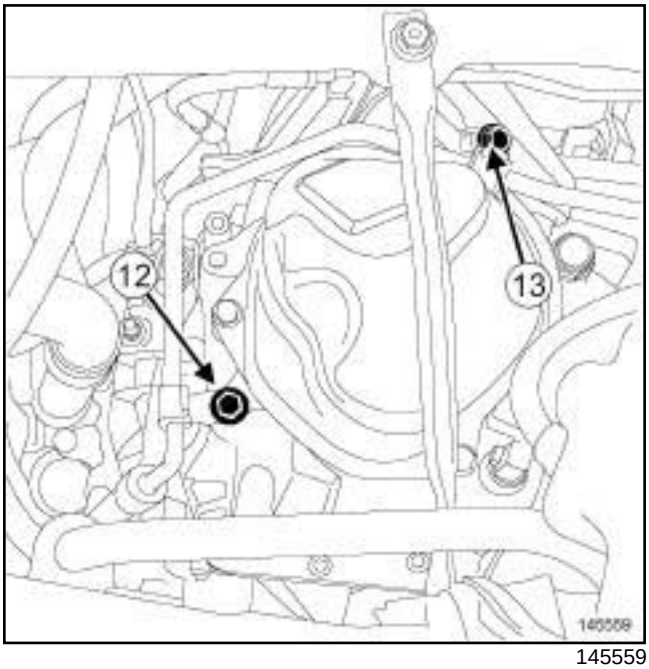

145559

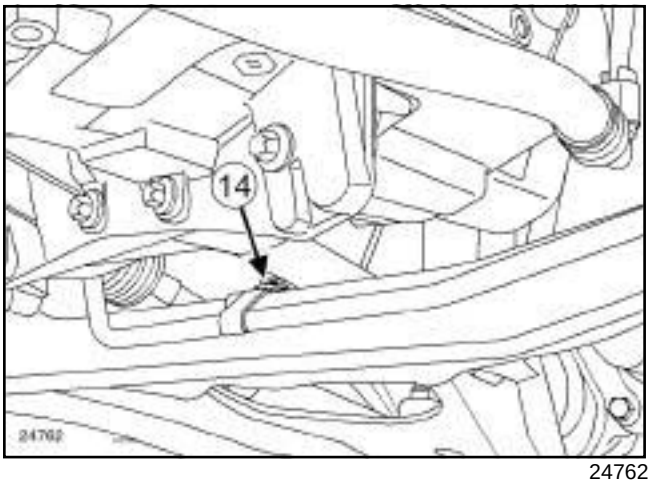

24762

❑ Remove:

- the bolt (**12**) from the power-assisted steering pipe on the gearbox,
- the bolt (**13**) from the power-assisted steering pipe on the gearbox mounting,
- the bolt (**14**) from the power-assisted steering pipe on the subframe.

2 - RIGHT-HAND SIDE OF VEHICLE

❑ Remove the front right-hand wheel arch side liner.

❑ Uncouple the front right-hand wheel driveshaft from the gearbox (see **29A**, **Driveshafts**, **Front right-hand driveshaft: Removal - Refitting**, page **29A-4**) .

K9K, and JR5

❑ Remove the steering box bolts on the subframe.

❑ Attach the steering rack to the body.

❑ Remove:

- the lower engine tie-bar (see **Lower engine tie-bar: Removal - Refitting**) (19D, Engine mounting),
- the front axle subframe (see **Front axle subframe: Removal - Refitting**) (31A, Front axle components),
- the starter (see **Starter: Removal - Refitting**) (16A, Starting - Charging).

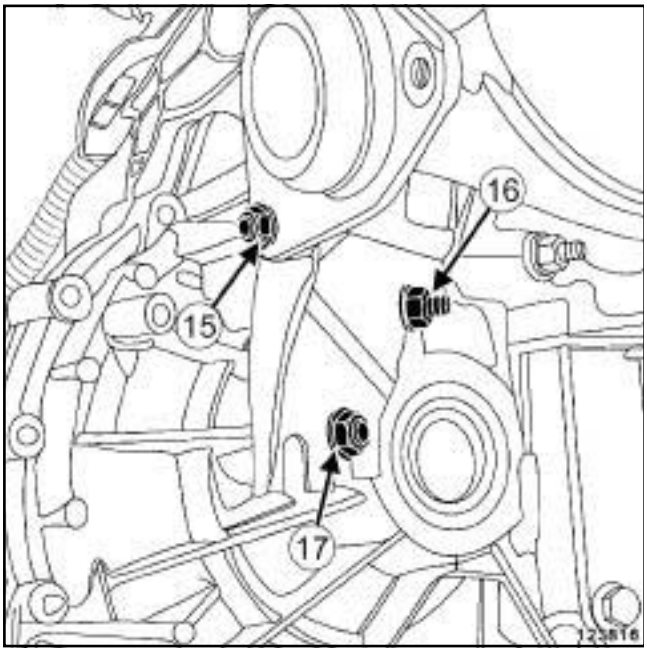

123816

❑ Remove the bolt (**15**) from the catalytic converter downstream strut.

❑ Undo:

- the nut (**16**) from the catalytic converter downstream strut,
- the bolt (**17**) of the catalytic converter downstream strut.

❑ Remove the catalytic converter downstream strut.

II - REMOVAL OPERATION

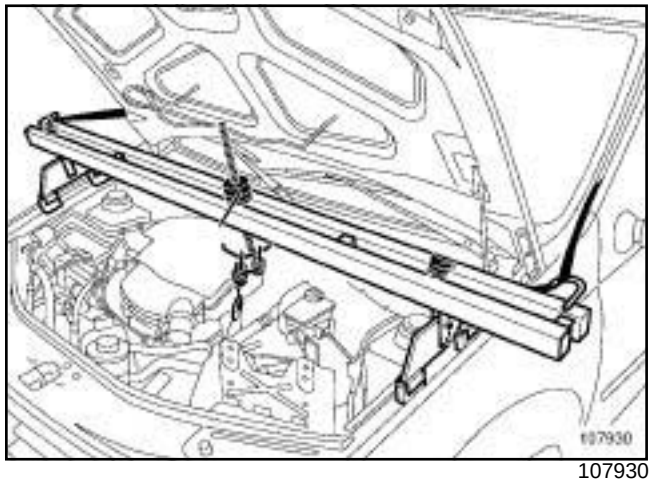
107930

❑ Fit the engine support tool **(Mot. 1453)** with the retaining belt, taking the flywheel end lifting eye as an anchoring point.

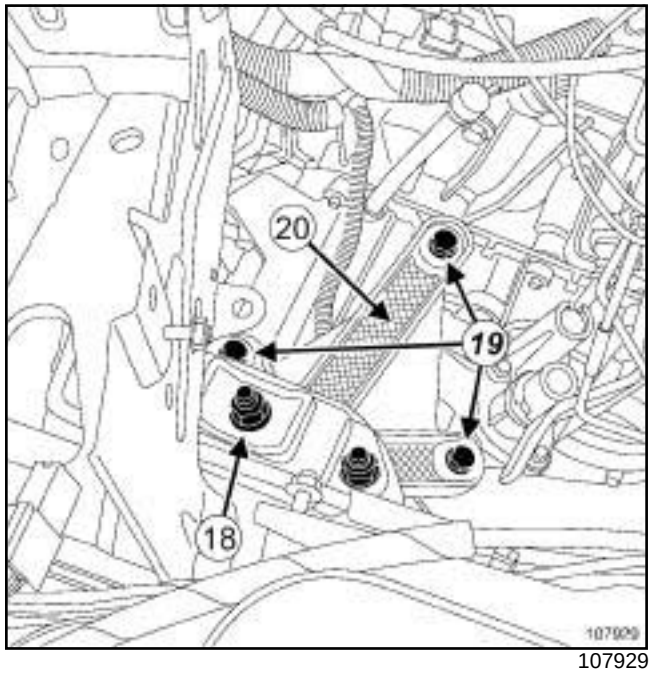

107929

❑ Remove:

- the suspended mounting nut (**18**) on the rubber pad,
- the bolts (**19**) from the gearbox suspended mounting,
- the gearbox suspended mounting (**20**) ,
- the gearbox upper bolts.

❑ Fit a **component jack** under the gearbox.

K9K, and JR5

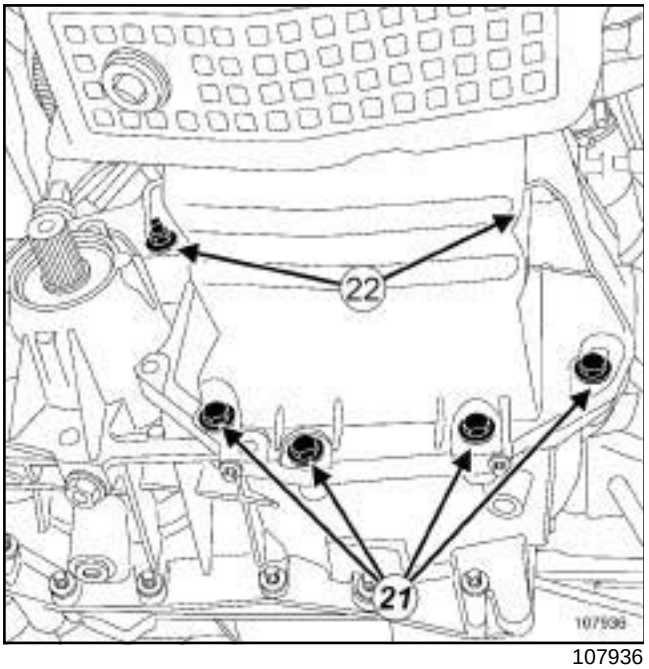

107936

❑ Remove:

- the gearbox lower bolts (**21**) ,
- the gearbox stud nuts (**22**) ,
- the gearbox.

REFITTING

I - REFITTING PREPARATION OPERATION

❑ Check for leaks from the input shaft, replace the guide tube if necessary (see **21A**, **Manual gearbox**, **Input shaft lip seal: Removal - Refitting**, page **21A-25**) .

❑ Always replace:

- the differential outlet seals,
- the clutch thrust bearing.

❑ Remove:

- the differential output seals (see **21A**, **Manual gearbox**, **Differential output seal: Removal - Refitting**, page **21A-2**) .
- the clutch thrust bearing (see **20A**, **Clutch**, **Clutch thrust bearing: Removal - Refitting**, page **20A-6**) .

❑ Refit:

- new differential output seals (see **21A**, **Manual gearbox**, **Differential output seal: Removal - Refitting**, page **21A-2**) .
- a new clutch thrust bearing (see **20A**, **Clutch**, **Clutch thrust bearing: Removal - Refitting**, page **20A-6**) .

❑

WARNING
To avoid damaging the slave cylinder, do not coat the gearbox output shaft with grease.

WARNING
To avoid damaging the clutch slave cylinder, do not coat the gearbox output shaft with grease.

❑

Note:

If a stud is loosened during this operation, coat the stud with **HIGH RESISTANCE THREAD-LOCK** (see **Vehicle: Parts and consumables for the repair**) . .

Torque tighten:

- the **stud on the engine (8 N.m)**,
- the **stud on the gearbox (8 N.m)**.

II - REFITTING OPERATION

❑ Check that the engine - gearbox centring rings are in place and correctly positioned.

❑ Couple the gearbox to the engine.

❑ Refit the gearbox stud nuts.

❑ Torque tighten the **gearbox stud nuts (44 N.m)**.

❑ Refit:

- the gearbox lower bolts,
- the gearbox upper bolts.

❑ Torque tighten the **upper and lower gearbox bolts (44 N.m)**.

❑ Remove the **component jack**.

❑ Refit the left-hand suspended engine mounting (see **Left-hand suspended engine mounting: Removal - Refitting**) .

❑ Remove the engine support tool (**Mot. 1453**).

K9K, and JR5

III - FINAL OPERATION

❏ Refit:

- the catalytic converter downstream strut (see **Catalytic converter: Removal - Refitting**) ,
- the starter (see **Starter: Removal - Refitting**) (16A, Starting - Charging),
- the front axle subframe (see **Front axle subframe: Removal - Refitting**) (31A, Front axle components),
- the engine tie-bar (see **Lower engine tie-bar: Removal - Refitting**) (19D, Engine mounting),
- the steering box (see **Steering box: Removal - Refitting**) (36A, Steering assembly).

❏ Connect the vehicle speed sensor connector.

❏ Refit:

- the vehicle speed sensor protective cover,
- the crankshaft position sensor (see **Crankshaft position sensor: Removal - Refitting**) .

IV - RIGHT-HAND SIDE OF THE VEHICLE

❏ Couple the front right-hand wheel driveshaft, on the gearbox side (see **29A**, **Driveshafts**, **Front right-hand driveshaft: Removal - Refitting**, page **29A-4**) .

❏ Refit the front right-hand wheel arch side liner.

V - LEFT-HAND SIDE OF THE VEHICLE

❏ Refit:

- the power-assisted steering pipe bolt on the subframe,
- the bolt for the power-assisted steering pipe on the gearbox mounting,
- the power-assisted steering pipe bolt on the gearbox.

❏ Torque tighten:

- the **power-assisted steering pipe bolt on the subframe (21 N.m)**,
- the **power-assisted steering pipe bolt on the gearbox mounting (21 N.m)**,
- the **power-assisted steering pipe bolt on the gearbox (21 N.m)**.

❏ Refit the earth strap bolts on the gearbox.

❏ Torque tighten the **earth strap bolts on the gearbox (21 N.m)**.

❏ Connect the reverse gear connector.

❏ Couple the front left-hand wheel driveshaft, on the gearbox side (see **29A**, **Driveshafts**, **Front left-hand driveshaft: Removal - Refitting**, page **29A-1**) .

❏ Refit the front left-hand wheel arch side liner.

❏ Refit the front bumper (see **Front bumper assembly: Exploded view**) .

❏ Top up the gearbox (see **21A**, **Manual gearbox**, **Manual gearbox oils: Draining - Filling**, page **21A-1**) .

❏ Refit the engine undertray.

❏ Connect the clutch control pipe to the clutch slave cylinder.

❏ Bleed the clutch control circuit (see **Clutch circuit: Bleed**) (37A, Mechanical component controls).

❏ Refit:

- the gearbox control cable sleeve stops on the gearbox,
- the gear control cables to the gearbox.

❏ Refit:

- the wiring on the gearbox,
- the wiring mounting on the injection computer mounting,
- the injection computer (see **Diesel injection computer: Removal - Refitting**) (13B, Diesel injection),
- the earth strap mounting nut,

❏ Connect the preheating unit connector.

❏ Refit:

- the air pipe between the turbocharger and the intercooler,
- the air pipe clip on the intercooler,
- the air pipe nut on the gearbox,
- the clip on the air pipe between the turbocharger and the intercooler.

❏ Refit the expansion bottle on its support.

❏ Torque tighten the **expansion bottle nuts (8 N.m)**.

❏ Refit:

- the front wheels (see **Wheel: Removal - Refitting**) (35A, Wheels and tyres),
- the battery tray,
- the battery (see **Battery: Removal - Refitting**) (80A, Battery).

K4M, and JR5

Special tooling required	
Mot. 1453	Engine anchorage support with multiple adjustments and retaining straps.

Equipment required
component jack

Tightening torques ▽	
stud on the engine	**8 N.m**
stud on the gearbox	**8 N.m**
gearbox stud nuts	**44 N.m**
upper and lower gearbox bolts	**44 N.m**
stay bolt on the cylinder block	**21 N.m**
stay nut on the exhaust manifold	**21 N.m**
power-assisted steering pipe bolt on the sub-frame	**21 N.m**
power-assisted steering pipe bolt on the gearbox mounting	**21 N.m**
power-assisted steering pipe bolt on the gearbox	**21 N.m**
earth strap bolts on the gearbox	**21 N.m**
expansion bottle nuts	**8 N.m**
earth strap nut on the injection computer support	**8 N.m**

IMPORTANT

To avoid all risk of damage to the systems, apply the safety and cleanliness instructions and operation recommendations before carrying out any repair:

- (see **Manual gearbox: Precautions for the repair**) ,
- (see **Vehicle: Precautions for the repair**) .

REMOVAL

I - REMOVAL PREPARATION OPERATION

❑ Position the vehicle on a two-post lift (see **Vehicle: Towing and lifting**) (02A, Lifting equipment).

IMPORTANT
To prevent the vehicle from falling, lash it to the vehicle lift using a strap.

❑ Remove:

- the battery (see **Battery: Removal - Refitting**) (80A, Battery),
- the battery tray,
- the earth strap nut on the injection computer mounting,
- the air resonator (see **Air resonator: Removal - Refitting**) (12A, Fuel mixture),
- the injection computer (see **Petrol injection computer: Removal - Refitting**) (17B, Petrol injection),
- the wiring mounting on the injection computer mounting.
- the wiring mounting on the gearbox,

❑ Move the engine harness aside.

❑ Remove the expansion bottle nuts.

❑ Move aside the expansion bottle from its support.

❑ Disconnect the vehicle speed sensor connector.

❑ Remove:

- the crankshaft position sensor (see **Crankshaft position sensor: Removal - Refitting**) ,
- the front wheels (see **Wheel: Removal - Refitting**) (35A, Wheels and tyres).

K4M, and JR5

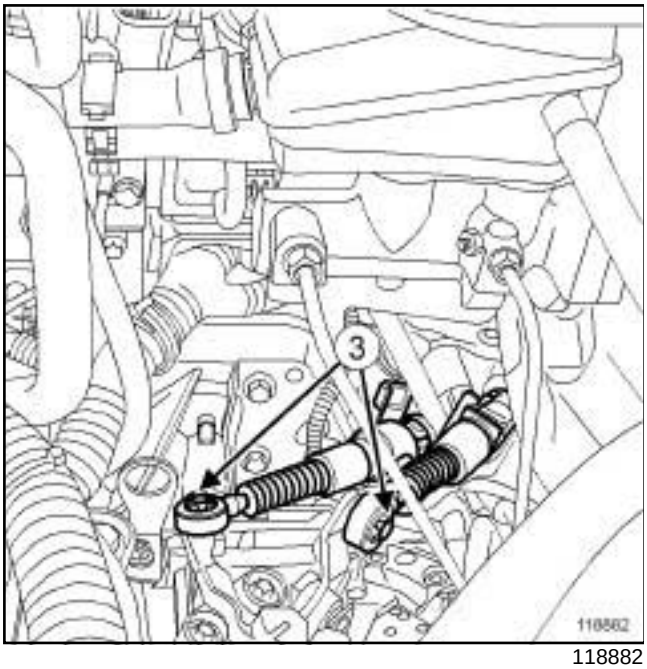

118882

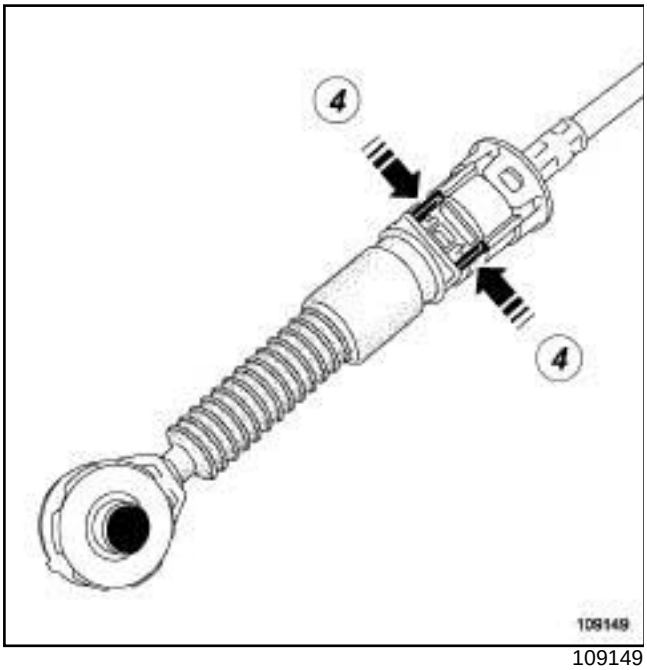

109149

❑ Unclip:

- the gear control cables on the gearbox at (**3**) ,
- the gearbox control cable sleeve stops by pressing at (**4**) .

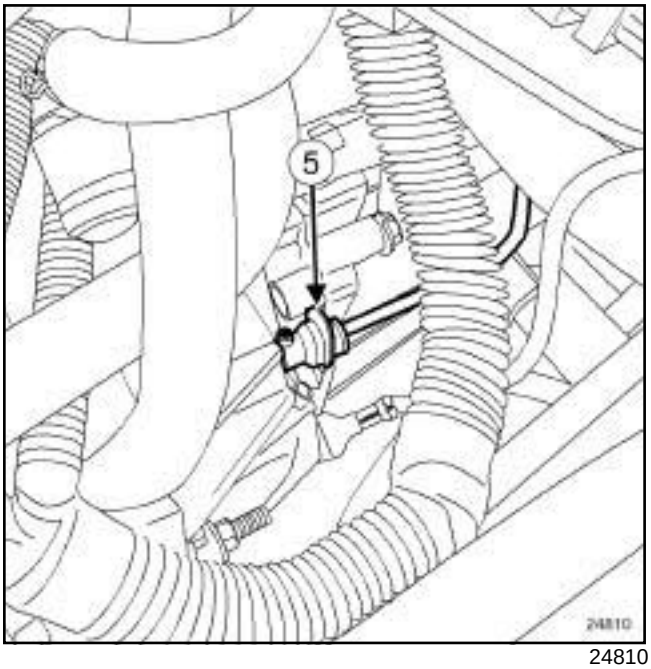

24810

❑ Press the clip (**5**) and disconnect the clutch control pipe on the clutch slave cylinder by pressing on the retaining clip.

> **WARNING**
> Do not pull the clip. If it is incorrectly handled in any way, the pipe will need to be replaced.

❑ Recover the brake fluid in a container.

❑ It is essential to place blanking plugs on the pipe openings.

❑ Remove the engine undertray.

❑ Drain the gearbox (see **21A**, **Manual gearbox**, **Manual gearbox oils: Draining - Filling**, page **21A-1**) .

❑ Remove the front bumper (see **Front bumper assembly: Exploded view**) .

1 - LEFT-HAND SIDE OF VEHICLE:

❑ Remove the front left-hand wheel arch side liner.

❑ Uncouple the front left-hand driveshaft from the gearbox (see **29A**, **Driveshafts**, **Front left-hand driveshaft: Removal - Refitting**, page **29A-1**) .

K4M, and JR5

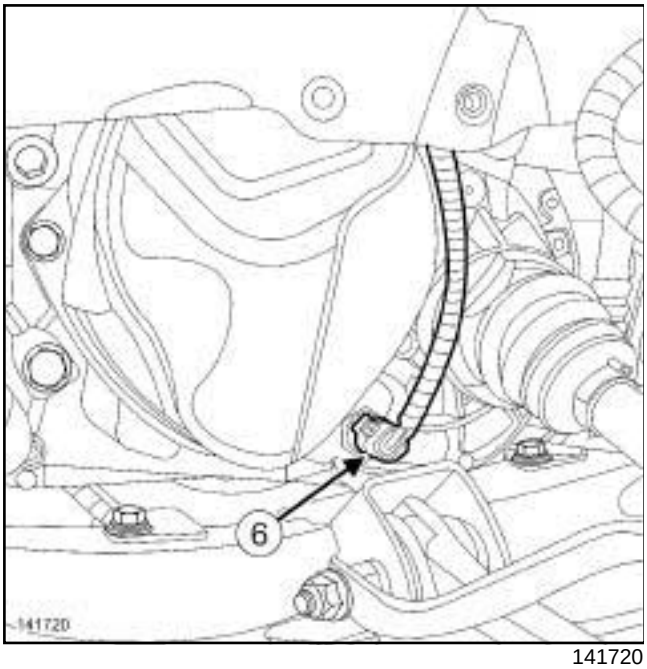

141720

❑ Disconnect the reverse gear connector (**6**) .

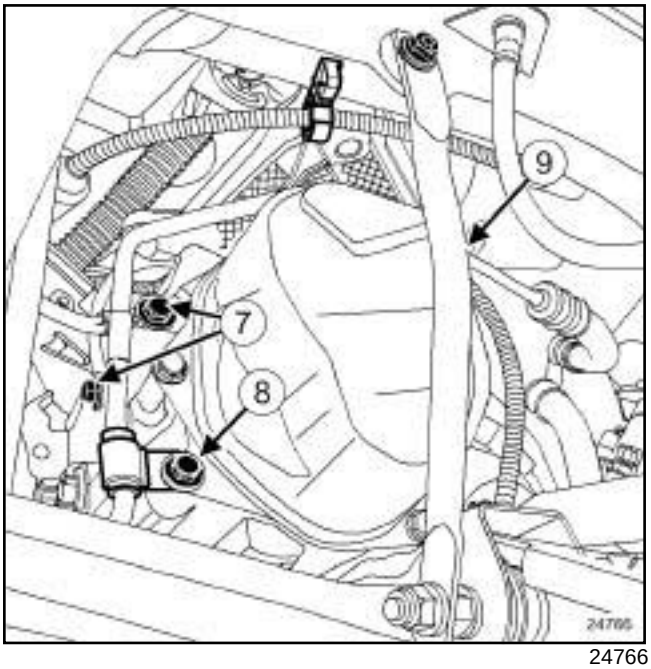

24766

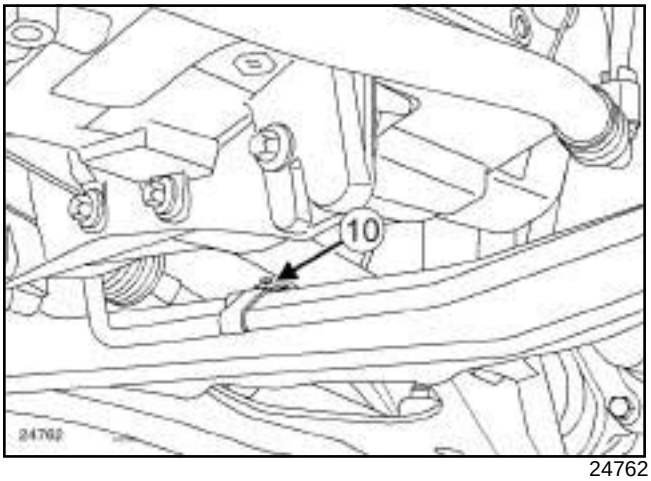

24762

❑ Remove:

- the earth strap bolts (**7**) on the gearbox,
- the bolt (**8**) from the power-assisted steering pipe on the gearbox,
- the bolt (**9**) from the power-assisted steering pipe on the gearbox mounting,
- the bolt (**10**) from the power-assisted steering pipe on the subframe.

K4M, and JR5

2 - RIGHT SIDE OF VEHICLE

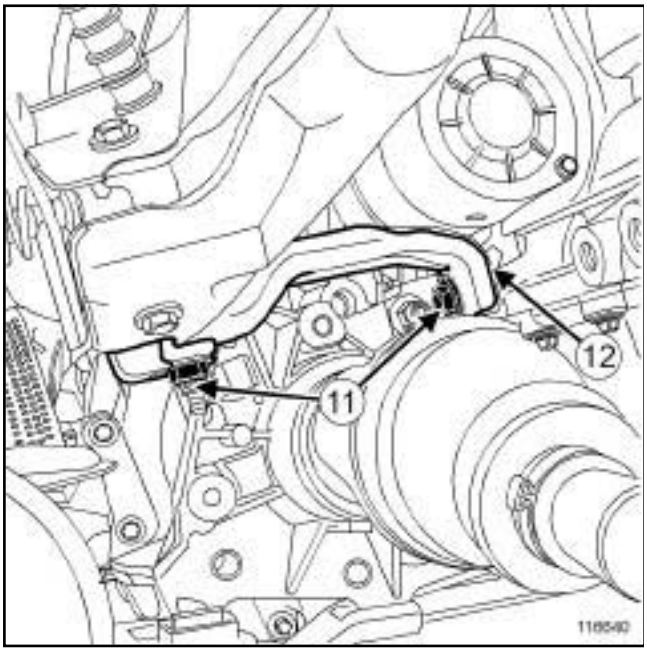

116640

❑ Remove:

- the front right-hand wheel arch side liner,
- the mountings (**11**) of the stay between the exhaust manifold and the cylinder block,
- the stay (**12**) .

❑ Uncouple the front right-hand wheel driveshaft from the gearbox (see **29A**, **Driveshafts**, **Front right-hand driveshaft: Removal - Refitting**, page **29A-4**) .

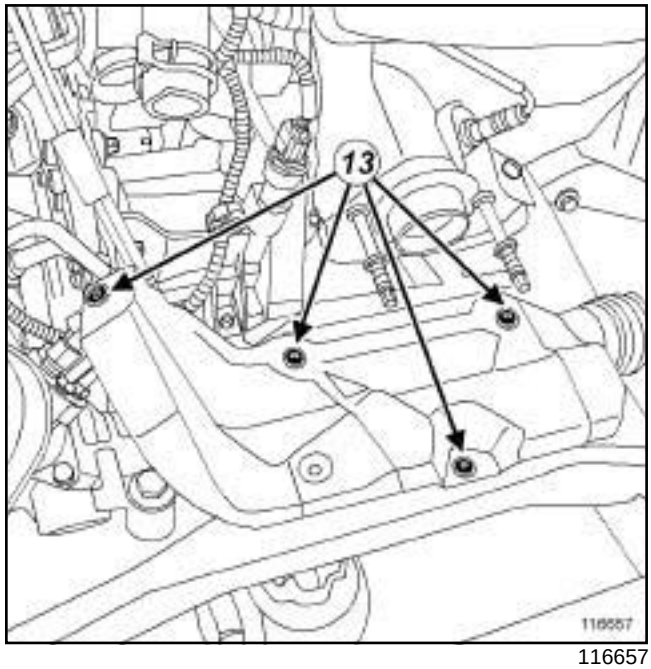

116657

❑ Remove:

- the bolts (**13**) from the steering box heat-resistant protector,
- the heat shield,
- the steering box bolts on the subframe.

❑ Attach the steering rack to the body.

❑ Remove:

- the lower engine tie-bar (see **Lower engine tie-bar: Removal - Refitting**) (19D, Engine mounting),
- the front axle subframe (see **Front axle subframe: Removal - Refitting**) (31A, Front axle components),
- the starter (see **Starter: Removal - Refitting**) (16A, Starting - Charging).

K4M, and JR5

II - REMOVAL OPERATION

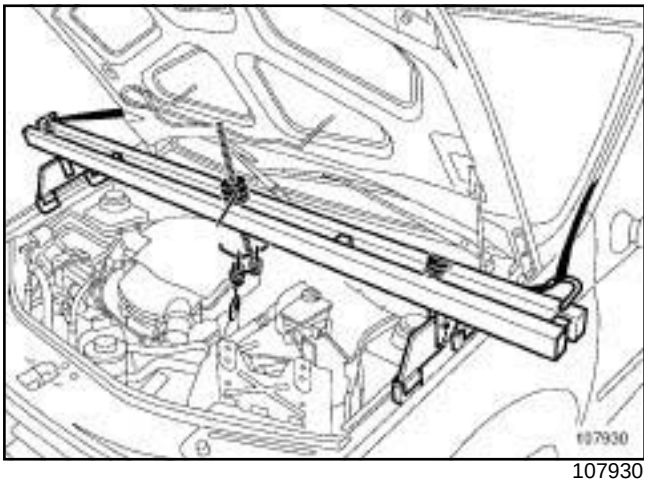

107930

❑ Fit the engine support tool **(Mot. 1453)** with the retaining belt, taking the flywheel end lifting eye as an anchoring point.

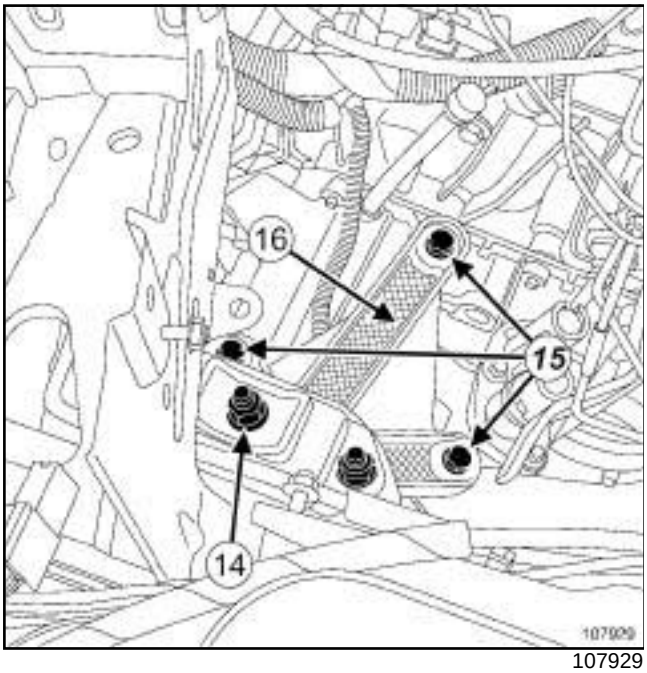

107929

❑ Remove:

- the suspended mounting nut (**14**) on the rubber pad,
- the bolts (**15**) from the gearbox suspended mounting,
- the suspended mounting (**16**) from the gearbox,
- the gearbox upper bolts.

❑ Fit a **component jack** under the gearbox.

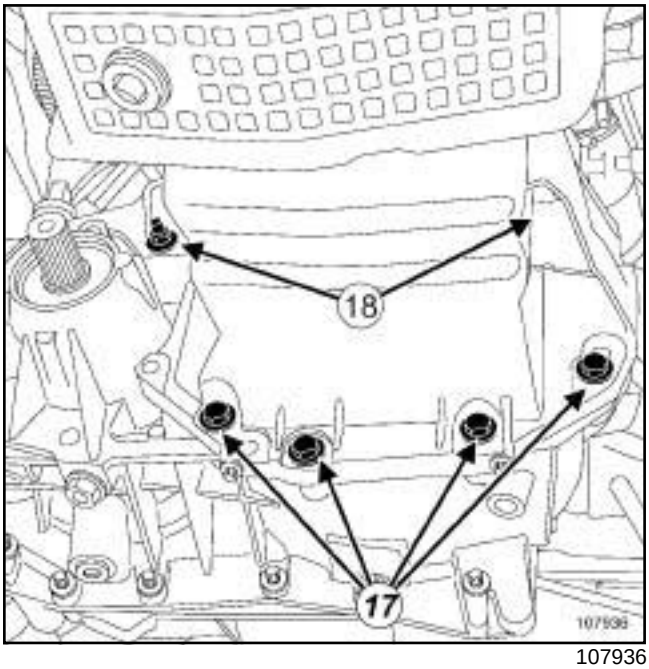

107936

❑ Remove:

- the gearbox lower bolts (**17**) ,
- the gearbox stud nuts (**18**) ,
- the gearbox.

REFITTING

I - REFITTING PREPARATION OPERATION

❑ Check for leaks from the input shaft, replace the guide tube if necessary (see **21A**, **Manual gearbox**, **Input shaft lip seal: Removal - Refitting**, page **21A-25**) .

❑ Always replace:

- the differential output seals,
- the clutch thrust bearing.

❑ Remove:

- the differential output seals (see **21A**, **Manual gearbox**, **Differential output seal: Removal - Refitting**, page **21A-2**) ,
- the clutch thrust bearing (see **20A**, **Clutch**, **Clutch thrust bearing: Removal - Refitting**, page **20A-6**) .

❑ Refit:

- new differential output seals (see **21A**, **Manual gearbox**, **Differential output seal: Removal - Refitting**, page **21A-2**) .

K4M, and JR5

- a new clutch thrust bearing (see **20A**, **Clutch**, **Clutch thrust bearing: Removal - Refitting**, page **20A-6**) .

❑

> **WARNING**
> Do not grease the clutch shaft splines.

> **WARNING**
> To avoid damaging the clutch slave cylinder, do not coat the gearbox output shaft with grease.

❑

> Note:
>
> If a stud is loosened during this operation, coat the stud with **HIGH STRENGTH THREADLOCK** (see **Vehicle: Parts and consumables for the repair**) .
>
> Torque tighten:
>
> - the **stud on the engine (8 N.m)**,
> - the **stud on the gearbox (8 N.m)**.

II - REFITTING OPERATION

❑ Check that the engine - gearbox centring rings are in place and correctly positioned.

❑ Couple the gearbox to the engine.

❑ Refit the gearbox stud nuts.

❑ Torque tighten the **gearbox stud nuts (44 N.m)**.

❑ Refit:

- the gearbox lower bolts,
- the gearbox upper bolts.

❑ Torque tighten the **upper and lower gearbox bolts (44 N.m)**.

❑ Remove the **component jack**.

❑ Refit the left-hand suspended engine mounting (see **Left-hand suspended engine mounting: Removal - Refitting**) .

❑ Remove the engine support tool (**Mot. 1453**).

III - FINAL OPERATION

❑ Refit:

- the starter (see **Starter: Removal - Refitting**) (16A, Starting - Charging),
- the front axle subframe (see **Front axle subframe: Removal - Refitting**) (31A, Front axle components),
- the lower engine tie-bar (see **Lower engine tie-bar: Removal - Refitting**) (19D, Engine mounting),
- the steering box (see **Steering box: Removal - Refitting**) (36A, Steering assembly),
- the steering box heat shield.

1 - RIGHT SIDE OF VEHICLE

❑ Couple the front right-hand wheel driveshaft, on the gearbox side (see **29A**, **Driveshafts**, **Front right-hand driveshaft: Removal - Refitting**, page **29A-4**) .

❑ Refit the stay between the exhaust manifold and the cylinder block.

❑ Torque tighten in order:

- the **stay bolt on the cylinder block (21 N.m)**,
- the **stay nut on the exhaust manifold (21 N.m)**.

❑ Refit the front right-hand wheel arch side liner.

2 - LEFT SIDE OF VEHICLE

❑ Refit:

- the power-assisted steering pipe bolt on the subframe,
- the bolt for the power-assisted steering pipe on the gearbox mounting,
- the power-assisted steering pipe bolt on the gearbox.

❑ Torque tighten:

- the **power-assisted steering pipe bolt on the subframe (21 N.m)**,
- the **power-assisted steering pipe bolt on the gearbox mounting (21 N.m)**,
- the **power-assisted steering pipe bolt on the gearbox (21 N.m)**.

❑ Refit the earth strap bolts on the gearbox.

❑ Torque tighten the **earth strap bolts on the gearbox (21 N.m)**.

❑ Connect the reverse gear connector.

❑ Couple the front left-hand wheel driveshaft, on the gearbox side (see **29A**, **Driveshafts**, **Front left-hand driveshaft: Removal - Refitting**, page **29A-1**) .

❑ Refit the front left-hand wheel arch side liner.

K4M, and JR5

- ❑ Refit the front bumper (see **Front bumper assembly: Exploded view**) .
- ❑ Top up the gearbox (see **21A**, **Manual gearbox**, **Manual gearbox oils: Draining - Filling**, page **21A-1**) .
- ❑ Refit the engine undertray.
- ❑ Connect the clutch control pipe to the clutch slave cylinder.
- ❑ Bleed the clutch control circuit (see **Clutch circuit: Bleed**) (37A, Mechanical component controls).
- ❑ Refit:
  - the gearbox control cable sleeve stops on the gearbox,
  - the gear control cables to the gearbox.
- ❑ Refit the front wheels (see **Wheel: Removal - Refitting**) (35A, Wheels and tyres).
- ❑ Connect the vehicle speed sensor connector.
- ❑ Refit:
  - the crankshaft position sensor (see **Crankshaft position sensor: Removal - Refitting**) ,
  - the expansion bottle on its support.
- ❑ Torque tighten the **expansion bottle nuts (8 N.m)**.
- ❑ Refit:
  - the wiring mounting on the gearbox,
  - the wiring mounting on the injection computer mounting,
  - the injection computer (see **Petrol injection computer: Removal - Refitting**) (17B, Petrol injection),
  - the air resonator (see **Air resonator: Removal - Refitting**) (12A, Fuel mixture),
  - the earth strap nut onto the injection computer support.
- ❑ Torque tighten the **earth strap nut on the injection computer support (8 N.m)**.
- ❑ Refit:
  - the battery tray,
  - the battery (see **Battery: Removal - Refitting**) (80A, Battery).

JR5

Equipment required
oil recovery tray

Tightening torques ▽	
5th gear housing bolts	**25 N.m**
front left-hand axle sub-frame tie-rod bolt	**21 N.m**
the nut of the front left-hand axle subframe tie-rod	**21 N.m**

IMPORTANT

To avoid all risk of damage to the systems, apply the safety and cleanliness instructions and operation recommendations before carrying out any repair:

- (see **Manual gearbox: Precautions for the repair**) ,
- **see Vehicle: Precautions for repair** (01D, Mechanical introduction).

I - REMOVAL PREPARATION OPERATION

❑ Position the vehicle on a two-post lift (see **Vehicle: Towing and lifting**) (02A, Lifting equipment).

❑ Remove:

- the engine undertray bolts,
- the engine undertray,
- the front left-hand wheel (see **Wheel: Removal - Refitting**) (35A, Wheels and tyres).

❑ Drain the gearbox (see **21A**, **Manual gearbox**, **Manual gearbox oils: Draining - Filling**, page **21A-1**) (21A, Manual gearbox).

❑ Remove the front left-hand wheel arch side liner.

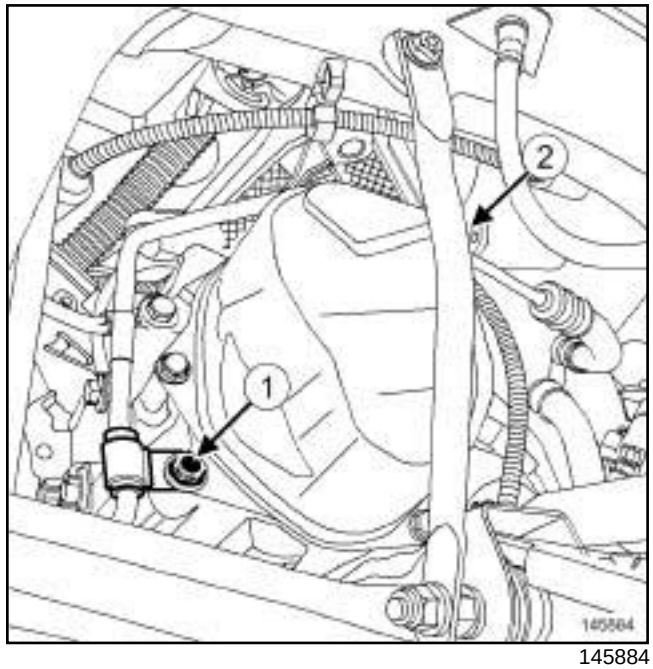

145884

❑ Remove:

- the bolt (**1**) mounting the power-assisted steering pipe on the gearbox,
- the bolt (**2**) mounting the power-assisted steering pipe on the gearbox support.

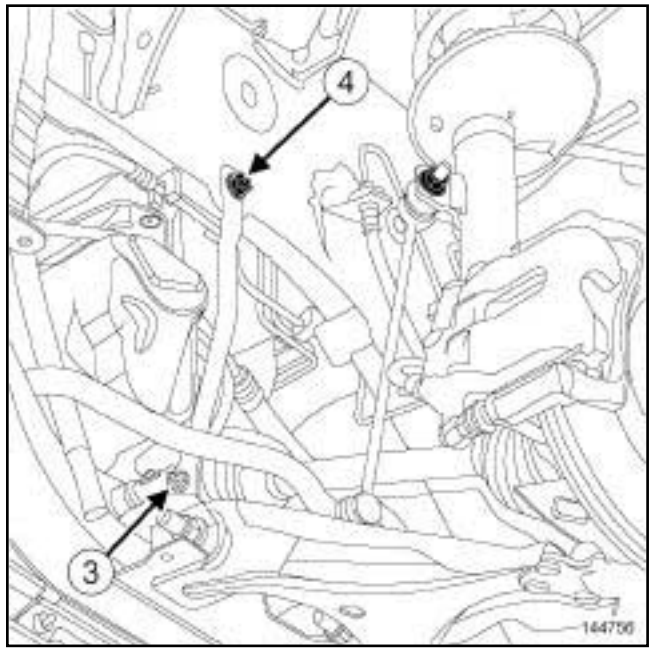

144756

❑ Loosen the nut (**3**) on the tie rod of the front left-hand axle subframe.

❑ Remove the bolt (**4**) from the tie rod of the front left-hand axle subframe.

❑ Move the tie rod away from the front left-hand axle subframe.

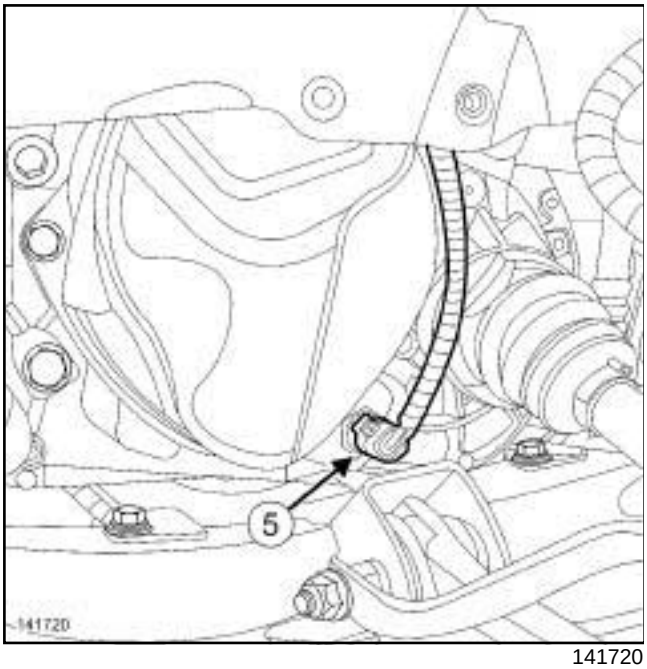

141720

❑ Disconnect the connector (**5**) from the reverse gear switch.

II - REMOVAL OPERATION

❑ Fit an **oil recovery tray** under the 5th gear housing.

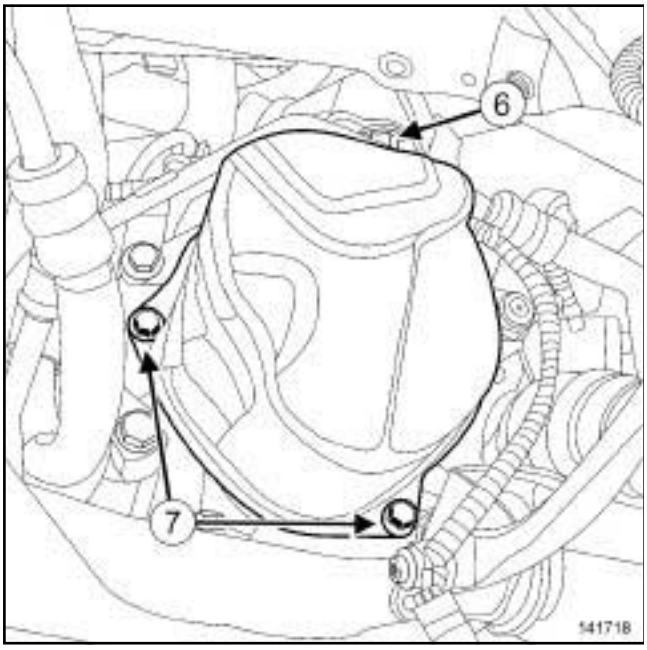

141718

❑ Unclip the wiring (**6**) of the reverse gear switch on the 5th gear housing.

❑ Remove the bolts (**7**) from the 5th gear housing.

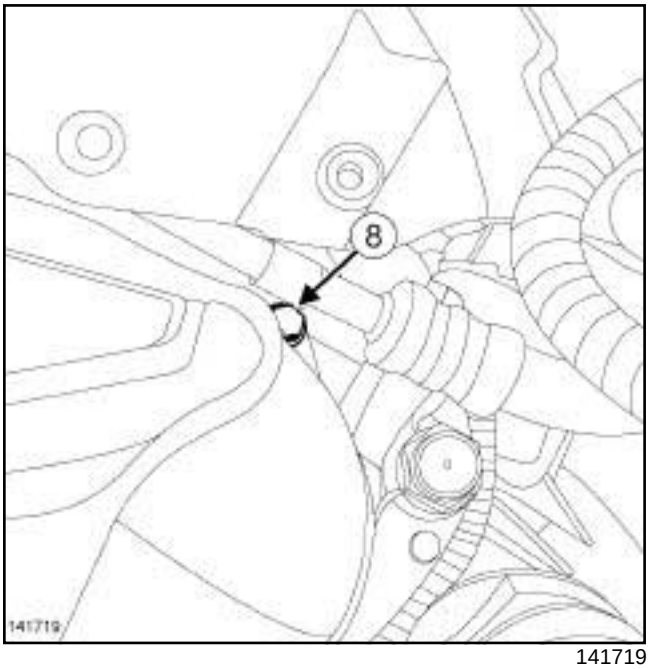

141719

❑ Remove:

- the bolt (**8**) of the 5th gear housing,
- the 5th gear housing,
- the seal of the 5th gear housing.

I - REFITTING PREPARATION OPERATION

❑ **parts always to be replaced: 5th gear housing seal**.

> **WARNING**
> Do not scrape the joint faces of the aluminium, any damage caused to the joint face will result in a risk of leaks.

> **WARNING**
> To ensure proper sealing, the gasket surfaces must be clean, dry and not greasy (avoid any finger marks).

❑ Use **SURFACE CLEANER** (see) to clean and degrease the joint face of:

- the 5th gear housing,
- the mechanism housing.

II - REFITTING OPERATION

❑ Refit the 5th gear housing equipped with a new seal.

❑ Torque tighten the **5th gear housing bolts (25 N.m)**.

JR5

- Proceed in the reverse order to removal.
- Torque tighten:
  - the **front left-hand axle subframe tie-rod bolt (21 N.m)**,
  - **the nut of the front left-hand axle subframe tie-rod (21 N.m)**.

III - FINAL OPERATION

- Fill and check the gearbox oil level (see **21A**, **Manual gearbox**, **Manual gearbox oils: Draining - Filling**, page **21A-1**) .

JR5

Special tooling required	
Bvi. 1170	Extractor tool for 5th gear hub on primary shaft.
Bvi. 1175	Fixed 5th gear mounting bolt.

Tightening torques ▽	
input shaft nut	**190 N.m**
output shaft bolt	**80 N.m**

REMOVAL

I - REMOVAL PREPARATION OPERATION

❑ Position the vehicle on a two-post lift (see **Vehicle: Towing and lifting**) (02A, Lifting equipment).

❑ Remove:

- the engine undertray bolts,
- the engine undertray,
- the front left-hand wheel (see **Wheel: Removal - Refitting**) (35A, Wheels and tyres),
- the front left-hand wheel arch side liner.

❑ Drain the gearbox (see **21A**, **Manual gearbox**, **Manual gearbox oils: Draining - Filling**, page **21A-1**) .

❑ Remove:

- the front axle subframe (see **Front axle subframe: Removal - Refitting**) (31A, Front axle components),
- the 5th gear housing (see **21A**, **Manual gearbox**, **5th gear housing: Removal - Refitting**, page **21A-18**) .

II - REMOVAL OPERATION

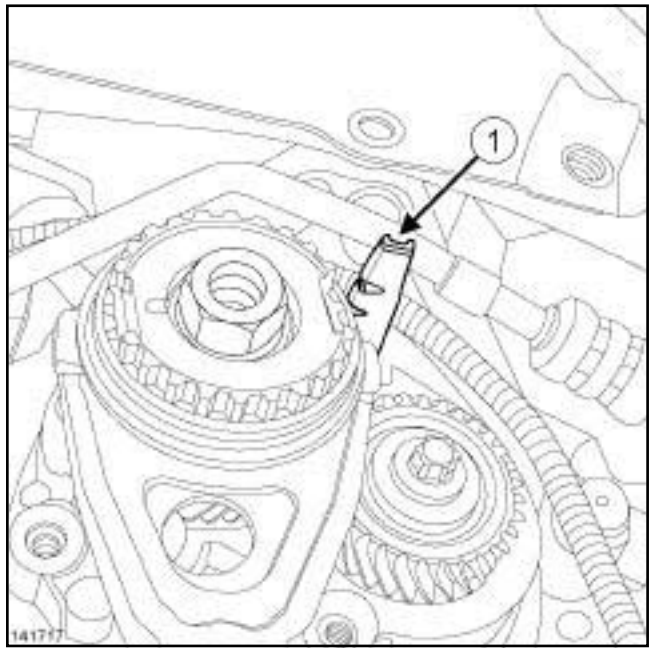

141717

❑

Note:

Take care not to damage the fifth gear lubrication neck (**1**) during the entire operation.

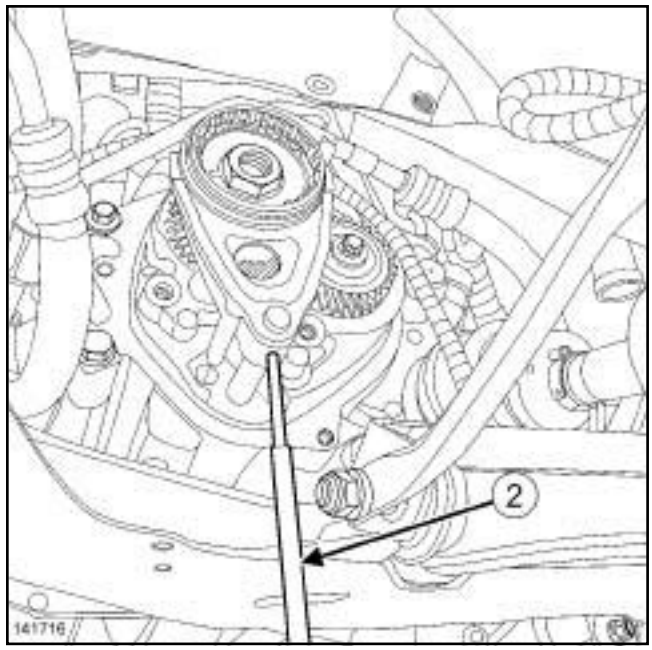

141716

❑ Remove the pin from the fifth gear fork using the tool (**2**) .

❑ Engage first gear using the gear lever.

JR5

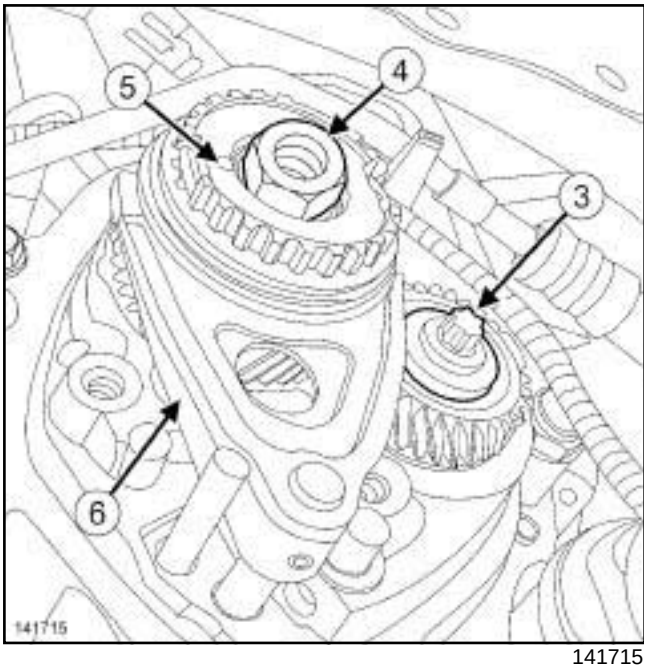

141715

❑ Engage fifth gear by moving the fifth gear fork.

> Note:
>
> The purpose of this operation is to lock the gear-box shafts in order to facilitate loosening.

❑ Remove:

- the output shaft bolt (**3**) ,
- the input shaft nut (**4**) ,
- the washer (**5**) of the input shaft nut,
- the fifth gear fork and selector rod (**6**) .

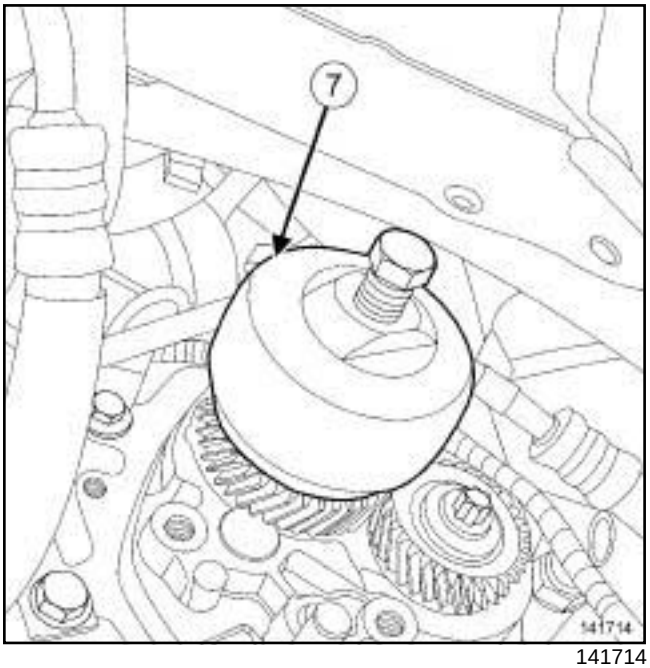

141714

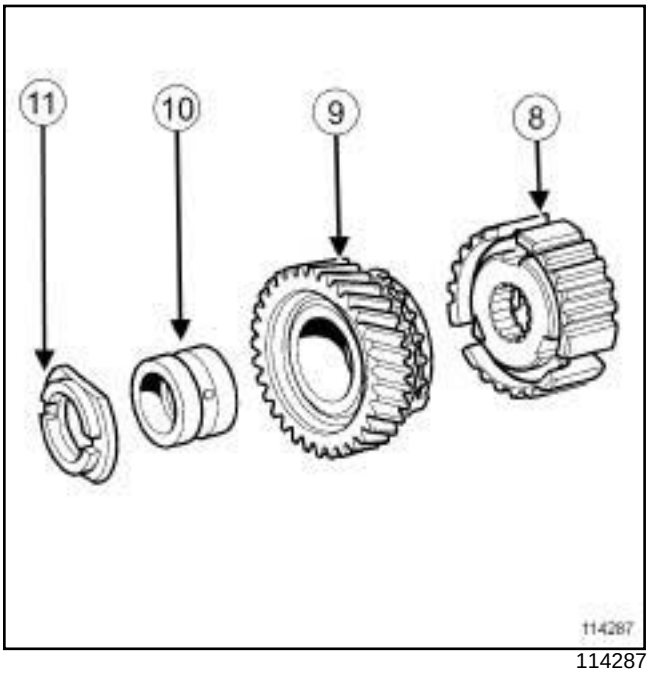

114287

❑ Position the **(Bvi. 1170)** (**7**) .

> Note:
>
> Tum the tool **(Bvi. 1170)** in order to position the splines of the tool selector rod opposite the fifth gear hub.

❑ Remove:

- the fifth gear hub fitted with its synchroniser springs ***(8)*** ,

JR5

- the fifth idle gear fitted with its synchroniser ring ***(9)*** ,
- the idle gear supporting ring ***(10)*** ,
- the lock washer ***(11)*** .

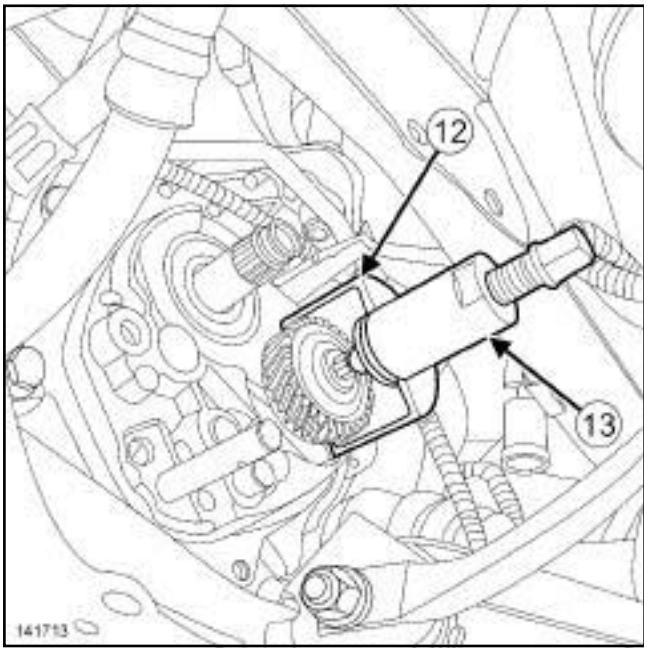

141713

❑ Refit the output shaft bolt, screwing it in a few turns.

❑ Fit:

- a half-shellof the tool (**12**) under the fifth gear pinion,
- the (**13**) on the half-shell of the tool.

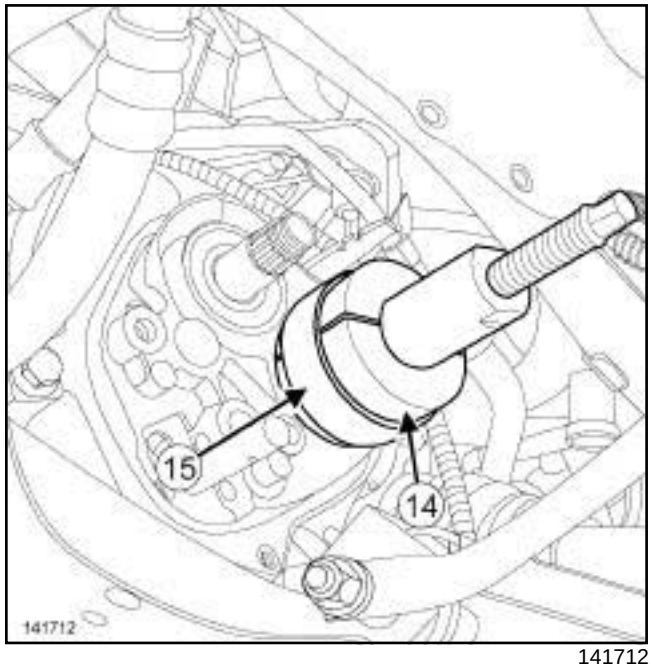

141712

❑ Fit the other half-shell (**14**) and the ringof the tool (**15**) .

❑ Remove the fifth gear pinion.

REFITTING

I - REFITTING PREPARATION OPERATION

❑ Always replace:

- the input shaft nut,
- the washer of the input shaft nut,
- the output shaft bolt,
- the pin of the fifth gear fork.

❑ Use **SURFACE CLEANER** (see **Vehicle: Parts and consumables for the repair**) (04B, Consumables - Products) to clean the ends of the gearbox shaft.

II - REFITTING OPERATION

❑ Put several drops of **FRENETANCHE** (see **Vehicle: Parts and consumables for the repair**) (04B, Consumables - Products) on the splines of the fifth gear pinion.

JR5

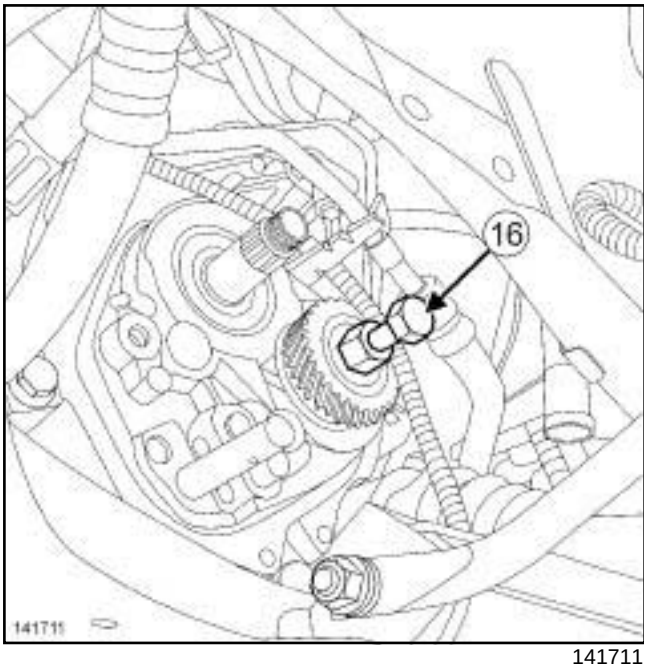

141711

- ❑ Refit the fifth gear pinion using the tool (**16**) **(Bvi. 1175)**.
- ❑ Remove the tool **(Bvi. 1175)**.
- ❑ On the input shaft, refit:
  - the lock washer,
  - the idle gear supporting ring,
  - the fifth idle gear fitted with its synchroniser ring,
  - the fifth gear hub fitted with its synchroniser springs.
- ❑ Refit:
  - the fifth gear fork and selector rod,
  - a new washer for the input shaft nut,
  - a new nut for the input shaft,
  - a new bolt for the output shaft.
- ❑ Change into fifth gear by moving the fifth gear fork.
- ❑ Torque tighten:
  - the **input shaft nut (190 N.m)**,
  - the **output shaft bolt (80 N.m)**.
- ❑ Put the gearbox in neutral.
- ❑ Fit a new pin for the fifth gear fork using the tool.

III - FINAL OPERATION

- ❑ Proceed in the reverse order to removal.
- ❑ Top up the gearbox (see **21A**, **Manual gearbox**, **Manual gearbox oils: Draining - Filling**, page **21A-1**) .
- ❑ Carry out a function test.

JR5

- Replace the lip seal after having opened the gearbox (see **Clutch housing bearing: Removal - Refitting**) (Technical Note 6029A, 21A, Manual gearbox).

Reverse gear switch: Removal - Refitting

JR5

Special tooling required	
Bvi. 1934	Socket for removing/refitting reverse gear switch

Tightening torques ▽	
reverse gear switch	**23 N.m**

REMOVAL

I - REMOVAL PREPARATION OPERATION

❑ Position the vehicle on a two-post lift (see **Vehicle: Towing and lifting**) (02A, Lifting equipment).

❑ Remove the engine undertray.

II - OPERATION FOR REMOVAL OF PART CONCERNED

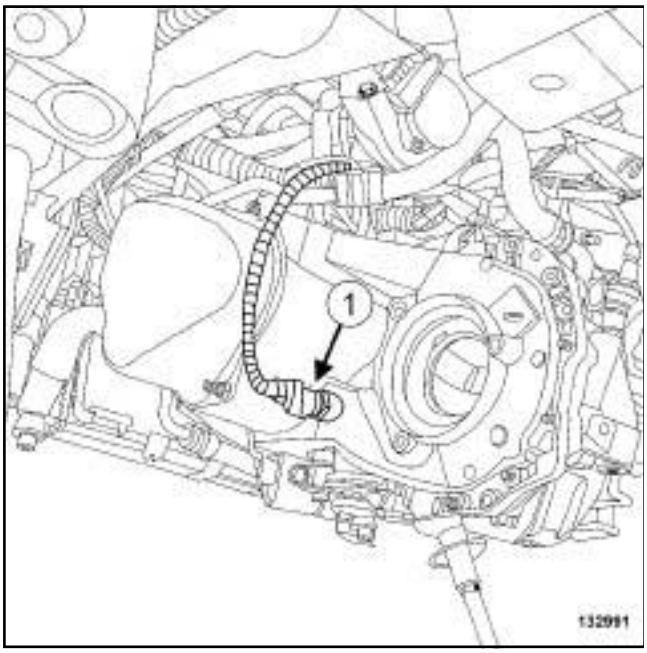

132991

❑ Disconnect the connector (**1**) from the reverse gear switch.

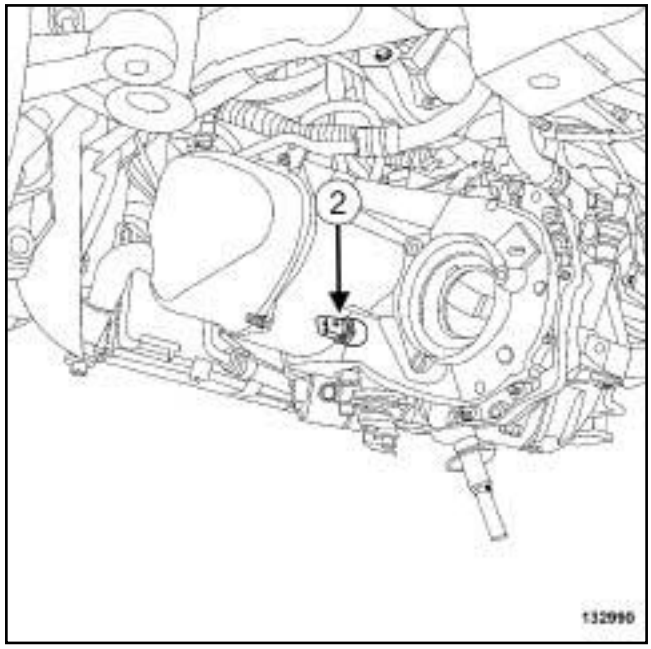

132990

❑ Remove the reverse gear switch (**2**) using the **(Bvi. 1934)**.

> Note:
>
> Seal the housing of the reverse gear switch while replacing the part.

REFITTING

I - REFITTING OPERATION FOR PART CONCERNED

❑ Apply some **SILICONE ADHESIVE SEALANT** (see **Vehicle: Parts and consumables for the repair**) (04B, Consumables - Products) to the threading of the reverse gear switch.

❑ Refit the reverse gear switch using the **(Bvi. 1934)**.

❑ Torque tighten the **reverse gear switch (23 N.m)**.

❑ Connect the reverse gear switch connector.

II - FINAL OPERATION

❑ Fill the gearbox (see **21A**, **Manual gearbox**, **Manual gearbox oils: Draining - Filling**, page **21A-1**) .

❑ Refit the engine undertray.

JR5

Special tooling required	
Emb. 880	Pin extractor tool.
Tav. 1813	Extraction claw for clip secured type driveshafts

Tightening torques ▽	
shock absorber base bolts	**105 N.m**
hub nut	**280 N.m**
track rod end nut	**37 N.m**

WARNING

In order to prevent irreversible damage to the front hub bearing:

- Do not loosen or tighten the driveshaft nut when the wheels are on the ground.
- Do not place the vehicle with its wheels on the ground when the driveshaft has been loosened or removed.

REMOVAL

I - REMOVAL PREPARATION OPERATION

❑ Position the vehicle on a two-post lift (see **Vehicle: Towing and lifting**) (02A, Lifting equipment).

❑ Remove:

- the engine undertray bolts,
- the engine undertray,
- the front left-hand wheel (see **Wheel: Removal - Refitting**) (35A, Wheels and tyres).

❑ Drain the manual gearbox (see **21A**, **Manual gearbox**, **Manual gearbox oils: Draining - Filling**, page **21A-1**) .

II - REMOVAL OPERATION

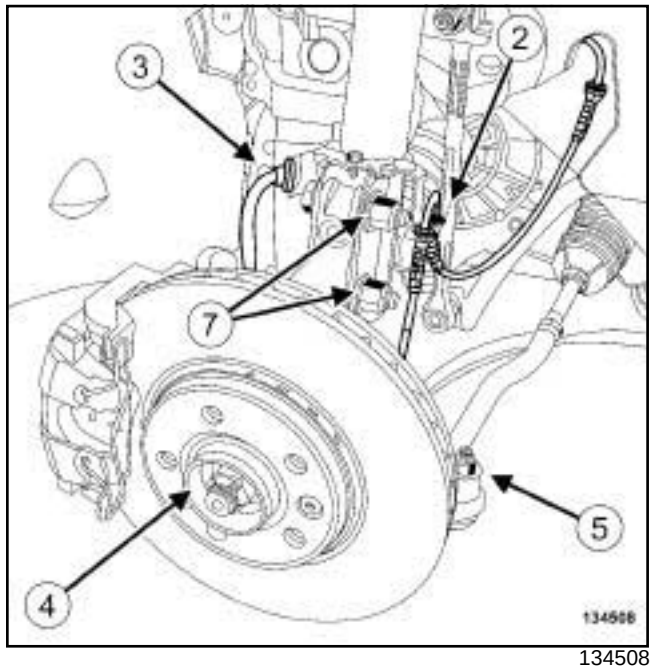

134508

❑ Unclip:

- the wiring of the front left-hand wheel speed sensor at (**2**) ,
- the brake hose of the front left-hand wheel at (**3**) .

❑ Remove:

- the hub nut ***(4)*** , using the,
- the track rod end nut ***(5)*** .

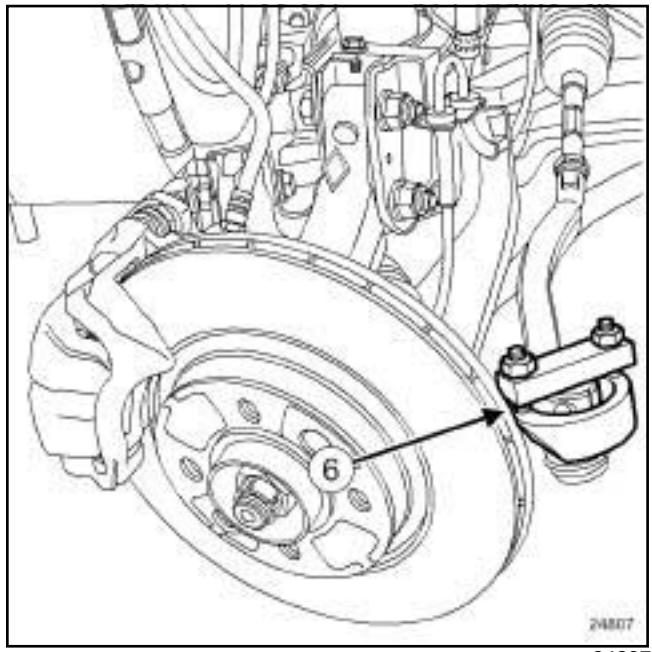

24807

❑ Remove the left-hand track rod end using the tool (**6**) .

JR5

- ❑ Remove the bolts ***(7)*** from the base of the left-hand shock absorber.
- ❑ Push back the front left-hand driveshaft from the stub axle carrier using the toolsand.
- ❑ Pivot the stub axle carrier to separate the driveshaft from the stub axle carrier.

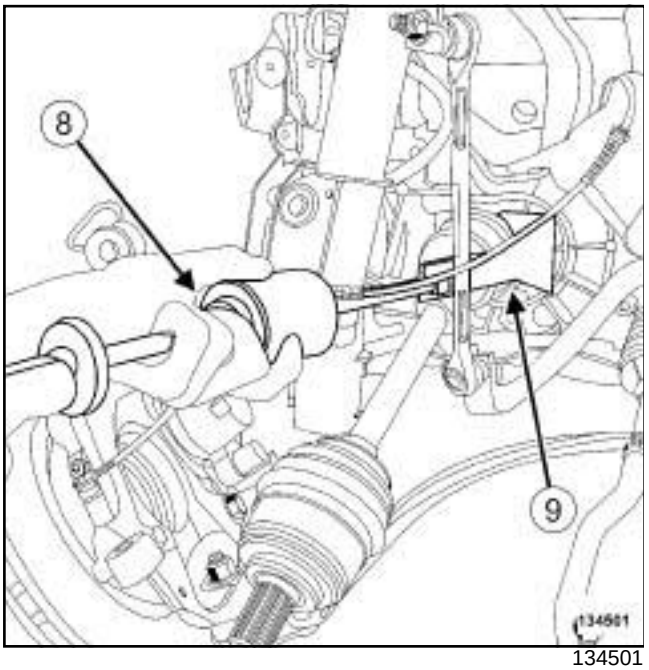

134501

- ❑ Extract the front left-hand driveshaft from the gearbox using the tool **(Emb. 880)** (**8**) fitted with the tool **(Tav. 1813)** (**9**) .
- ❑ Remove:
  - the front left-hand driveshaft.
  - the left-hand differential output seal (see **21A**, **Manual gearbox**, **Differential output seal: Removal - Refitting**, page **21A-2**) .

REFITTING

I - REFITTING PREPARATION OPERATION

❑

> **WARNING**
> Do not refit a driveshaft if the lip seal mating face is damaged.

- ❑ Check the condition of the lip seal mating face on the driveshaft.

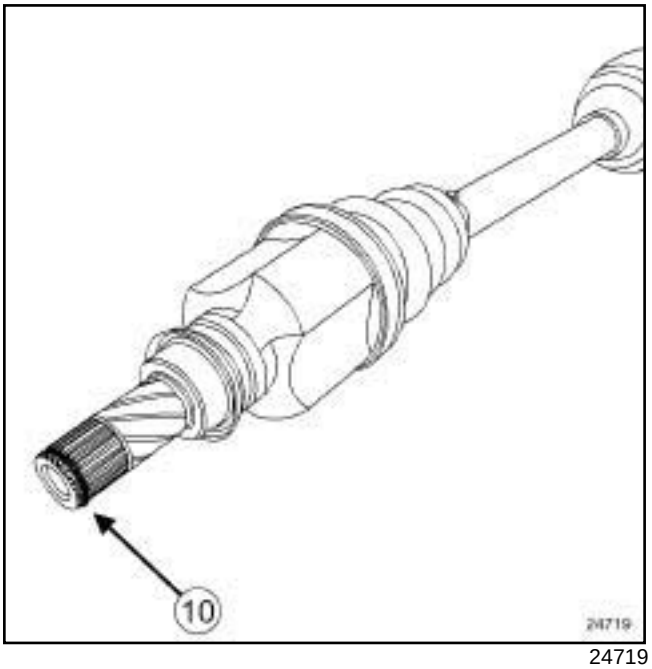

24719

- ❑ Always replace the driveshaft circlip (**10**) .

II - REFITTING OPERATION

- ❑ Refit the left-hand differential output seal (see **21A**, **Manual gearbox**, **Differential output seal: Removal - Refitting**, page **21A-2**) .
- ❑ Engage the drive shaft splines in the differential grooves as straight as possible so as not to damage the seal.
- ❑ Insert the drive shaft splines in the hub grooves.

> Note:
> The driveshaft must fit freely into the stub axle carrier until it protrudes enough for the hub nut to be fitted.

- ❑ Refit the shock absorber base bolts.
- ❑ Torque tighten the **shock absorber base bolts (105 N.m)**.
- ❑ Refit the hub nut.
- ❑ Torque tighten the **hub nut (280 N.m)** using the tool.
- ❑ Refit the track rod end.
- ❑ Torque tighten the **track rod end nut (37 N.m)**.
- ❑ Clip:
  - the wiring of the front left-hand wheel speed sensor at ***(2)*** ,
  - the brake hose of the front left-hand wheel at ***(3)*** .

JR5

III - FINAL OPERATION

❑ Refit:

- the engine undertray,
- the front left-hand wheel (see **Wheel: Removal - Refitting**) (35A, Wheels and tyres).

❑ Fill and check the manual gearbox oil level (see **21A**, **Manual gearbox**, **Manual gearbox oils: Draining - Filling**, page **21A-1**) .

JR5

Tightening torques ▽	
driveshaft relay bearing bracket bolts	**21 N.m**
shock absorber base bolts	**105 N.m**
hub nut	**280 N.m**
track rod ball joint nut	**37 N.m**

WARNING

In order to prevent irreversible damage to the front hub bearing:

- Do not loosen or tighten the driveshaft nut when the wheels are on the ground.
- Do not place the vehicle with its wheels on the ground when the driveshaft has been loosened or removed.

REMOVAL

I - REMOVAL PREPARATION OPERATION

❑ Position the vehicle on a two-post lift (see **Vehicle: Towing and lifting**) (02A, Lifting equipment).

❑ Remove:

- the front right-hand wheel (see **Wheel: Removal - Refitting**) (35A, Wheels and tyres),
- the engine undertray.

❑ Drain the manual gearbox (see **21A**, **Manual gearbox**, **Manual gearbox oils: Draining - Filling**, page **21A-1**) .

II - REMOVAL OPERATION

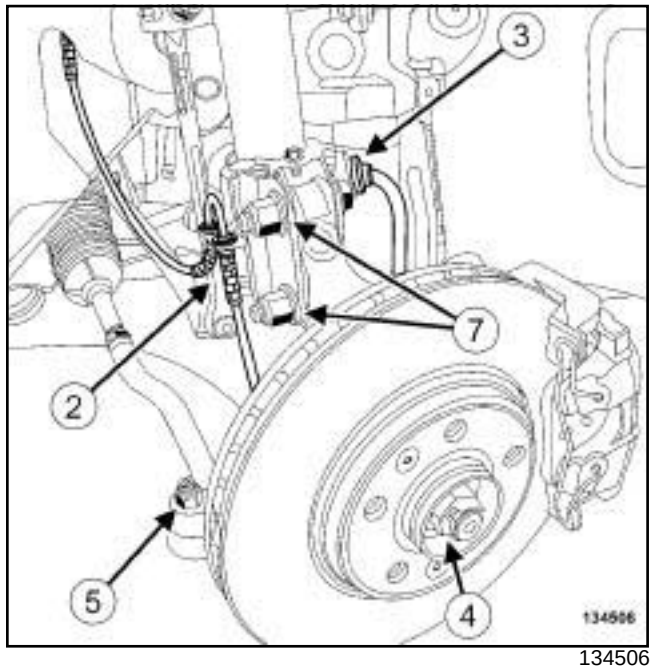

134506

❑ Unclip:

- the wiring from the front right-hand wheel speed sensor at (**2**) ,
- the brake hose of the front right-hand wheel at (**3**) .

❑ Remove:

- the hub nut ***(4)*** using the,
- the right-hand track rod ball joint nut ***(5)*** .

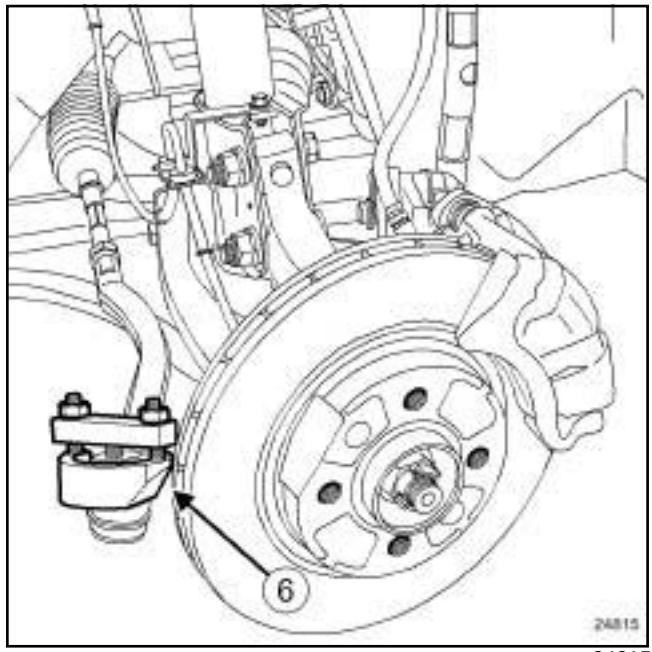

24815

❑ Remove the ball joint from the right-hand track rod using the tool (**6**) .

JR5

- ❑ Remove the bolts from the base of the right-hand shock absorber ***(7)*** .
- ❑ Push back the front right-hand driveshaft from the stub axle carrier using the toolsand.
- ❑ Pivot the stub axle carrier to separate the driveshaft from the stub axle carrier.

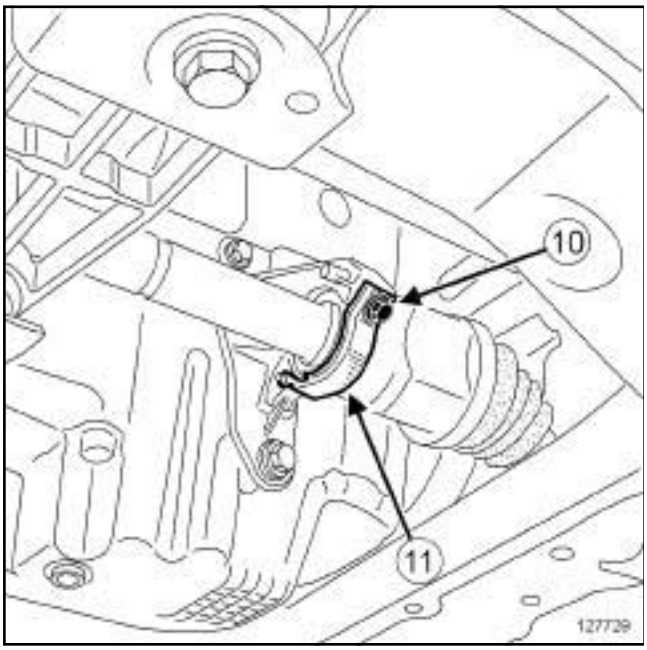

127729

- ❑ Remove the bolt (**10**) from the driveshaft relay bearing bracket.
- ❑ Pivot the driveshaft relay bearing bracket (**11**) .
- ❑ Remove:
  - the front right-hand driveshaft from the gearbox,
  - the right-hand differential output seal (see **21A**, **Manual gearbox**, **Differential output seal: Removal - Refitting**, page **21A-2**) .

REFITTING

I - REFITTING PREPARATION OPERATION

- ❑ Check the condition of the lip seal mating face on the driveshaft.

> **WARNING**
> Do not refit a driveshaft if the lip seal mating face is damaged.

- ❑ **parts always to be replaced: Front wheel hub nut**.
- ❑ **parts always to be replaced: relay bearing bracket bolt**.
- ❑ Refit a new right-hand differential output seal (see **21A**, **Manual gearbox**, **Differential output seal: Removal - Refitting**, page **21A-2**) .
- ❑ Clean and grease the driveshaft relay bearing bore into which the bearing is inserted with **BR2+ GREASE** (see **Vehicle: Parts and consumables for the repair**) (04B, Consumables - Products).

II - REFITTING OPERATION

- ❑ Engage the driveshaft splines with the differential splines as straight as possible, so as to not damage the seal.
- ❑ Insert the drive shaft splines in the hub grooves.

> Note:
> The driveshaft must fit freely into the stub axle carrier until it protrudes enough for the hub nut to be fitted.

- ❑ Refit the relay bearing bracket.
- ❑ Torque tighten the **driveshaft relay bearing bracket bolts (21 N.m)**.
- ❑ Refit the bolts to the shock absorber base.
- ❑ Torque tighten the **shock absorber base bolts (105 N.m)**.
- ❑ Refit the hub nut.
- ❑ Torque tighten the **hub nut (280 N.m)** using the tool.
- ❑ Refit the track rod ball joint.
- ❑ Torque tighten the **track rod ball joint nut (37 N.m)**.
- ❑ Clip:
  - the wiring of the front right-hand wheel speed sensor,
  - the brake hose of the front right-hand wheel.

III - FINAL OPERATION

- ❑ Refit:
  - the engine undertray,
  - the front right-hand wheel (see **Wheel: Removal - Refitting**) (35A, Wheels and tyres).
- ❑ Fill and check the manual gearbox oil level (see **21A**, **Manual gearbox**, **Manual gearbox oils: Draining - Filling**, page **21A-1**) .

JR5

REMOVAL

I - REMOVAL PREPARATION OPERATION

❑ Position the vehicle on a two-post lift (see **Vehicle: Towing and lifting**) (02A, Lifting equipment).

❑ Remove:

- the engine undertray bolts,
- the engine undertray.

❑ Drain the manual gearbox (see **21A**, **Manual gearbox**, **Manual gearbox oils: Draining - Filling**, page **21A-1**) .

❑ Remove:

- the front right-hand wheel (see **Wheel: Removal - Refitting**) (35A, Wheels and tyres),
- the front right-hand wheel driveshaft (see **29A**, **Driveshafts**, **Front right-hand driveshaft: Removal - Refitting**, page **29A-4**) .

❑ Extract the deflector using a press and an extractor.

II - OPERATION FOR REMOVAL OF PART CONCERNED

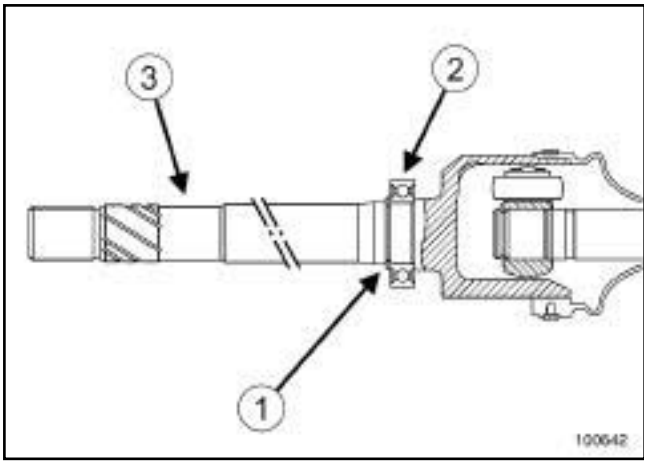

100642

❑ Remove the rubber ring (**1**) of the relay bearing (**2**) .

> Note:
>
> Do not scratch the mating face of the lip seal on the relay shaft (**3**) .

❑ Extract the relay shaft bearing (**2**) using a press and an extractor.

REFITTING

I - REFITTING PREPARATION OPERATION

❑ **parts always to be replaced: Relay shaft bearing**.

parts always to be replaced: relay bearing rubber ring.

❑ Clean and degrease the bore of the relay bearing with **SURFACE CLEANER** (see **Vehicle: Parts and consumables for the repair**) (04B, Consumables - Products).

❑ Lubricate the mating face of the driveshaft receiving the deflector and the relay shaft bearing.

II - REFITTING OPERATION FOR PART CONCERNED

❑ Fit a new relay shaft bearing to the relay shaft.

❑ Fit the bearing to the end using a tube, so that it rests on the inner bush of the bearing.

❑ Refit a new rubber ring for the relay bearing.

III - FINAL OPERATION

❑ Fit a new deflector to the relay shaft.

❑ Fit the deflector to the end using a tube, so that it rests on the surface of the deflector.

❑ Clean and grease the bearing hole into which the bearing will be inserted.

❑ Refit:

- the front right-hand driveshaft (see **29A**, **Driveshafts**, **Front right-hand driveshaft: Removal - Refitting**, page **29A-4**) ,
- the front right-hand wheel (see **Wheel: Removal - Refitting**) (35A, Wheels and tyres).

❑ Fill up the manual gearbox (see **21A**, **Manual gearbox**, **Manual gearbox oils: Draining - Filling**, page **21A-1**) .

❑ Refit the engine undertray.

JR5

Special tooling required	
Emb. 880	Pin extractor tool.

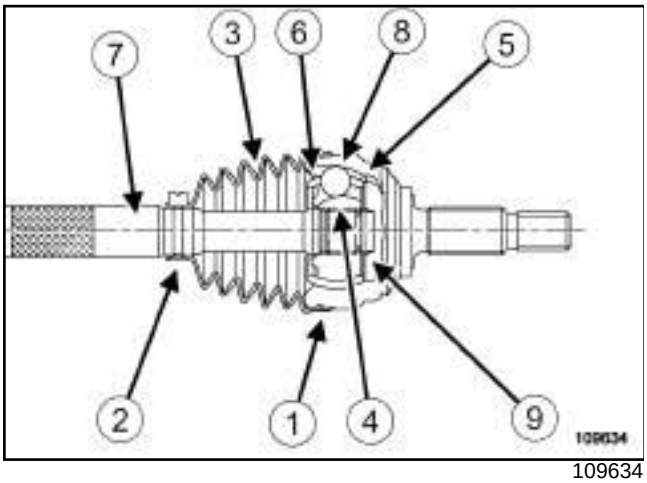

109634

(**1**)	Big securing clip
(**2**)	Small securing clip
(**3**)	Driveshaft gaiter
(**4**)	Ball hub
(**5**)	Stub axle bowl
(**6**)	Ball race
(**7**)	Driveshaft
(**8**)	Balls
(**9**)	Lock ring

IMPORTANT
Wear leaktight gloves (Nitrile type) for this operation.

REMOVAL

I - REMOVAL PREPARATION OPERATION

❑ Remove the front driveshaft on the side concerned (see **29A**, **Driveshafts**, **Front right-hand driveshaft: Removal - Refitting**, page **29A-4**) or (see **29A**, **Driveshafts**, **Front left-hand driveshaft: Removal - Refitting**, page **29A-1**) .

II - REMOVAL OPERATION

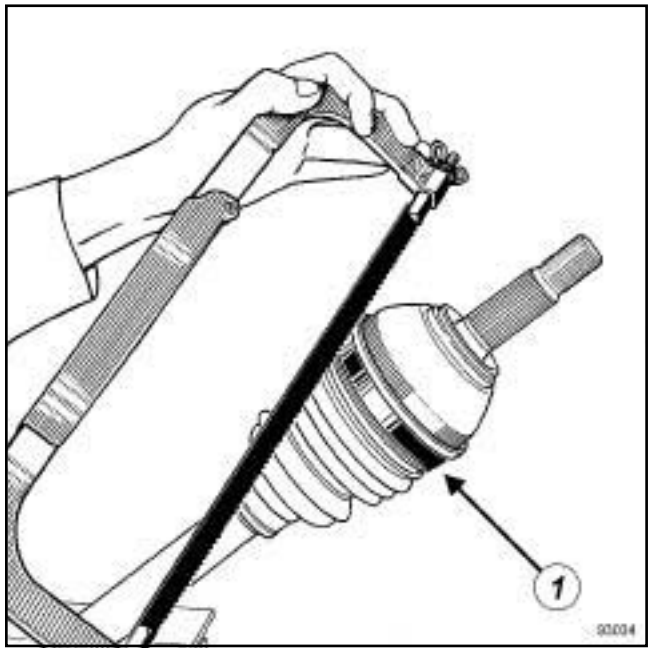

93034

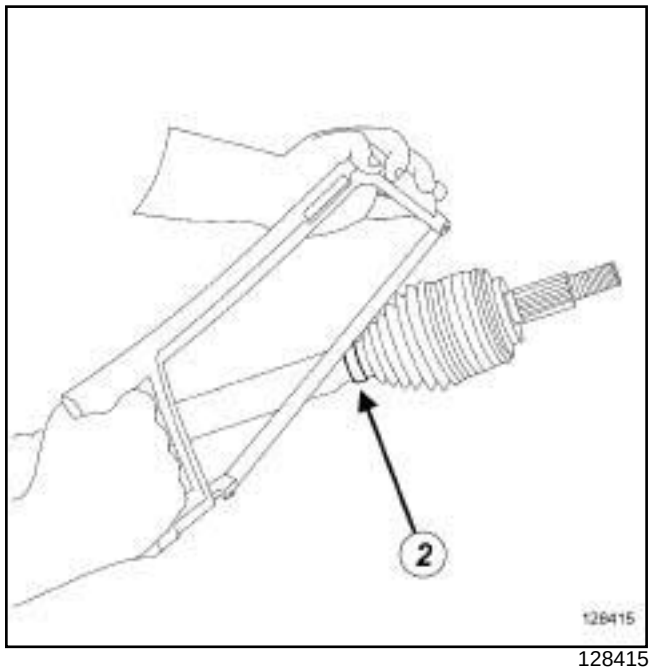

128415

❑ Cut the big securing clip (**1**) and the small securing clip (**2**) using cutting pliers or a metal saw, taking care not to damage the stub axle bowl and the driveshaft.

JR5

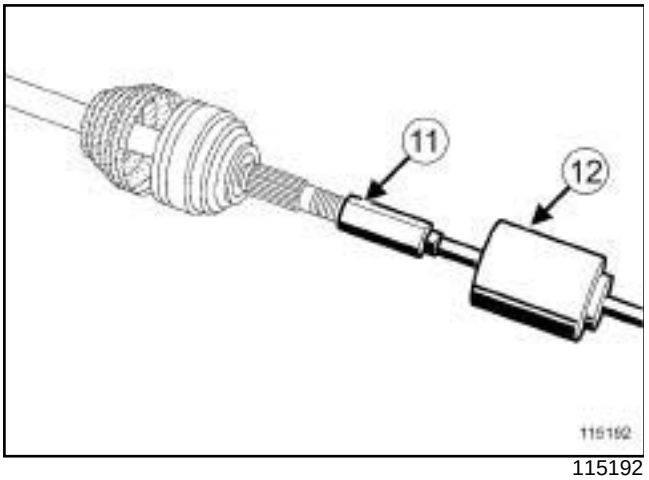

115192

❑ Pull out the stub axle bowl using the (**11**) and the extractor **(Emb. 880)** (**12**) .

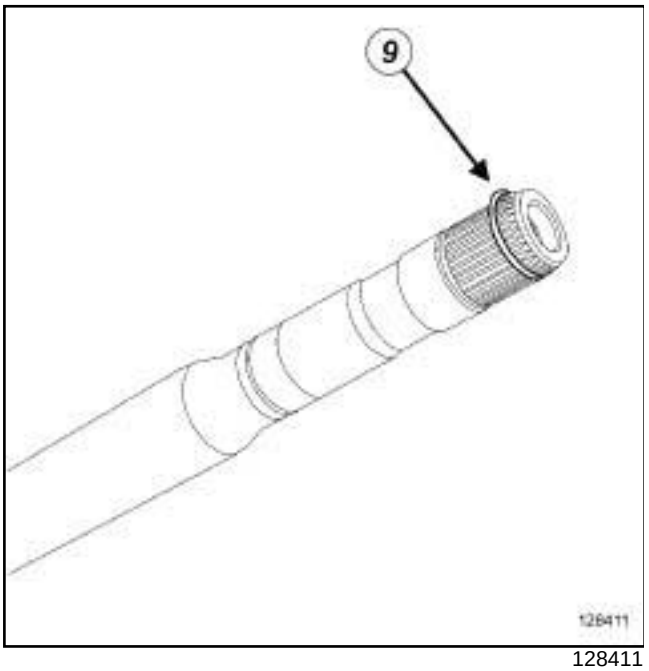

128411

❑ Remove:

- the locking ring (**9**) ,
- the driveshaft gaiter (**3**) .

REFITTING

I - REFITTING PREPARATION OPERATION

❑

WARNING
Never use thinner to clean the components.

Note:
It is essential to use the prescribed volume of grease (see) .

❑ **parts always to be replaced: Front driveshaft gaiter, wheel side**.

❑ **parts always to be replaced: wheel side front driveshaft seal locking ring**.

❑ Always replace:

- the small securing clip,
- the big securing clip.

❑ Use a **CLEANING STATION** to clean the driveshaft and the stub axle bowl.

II - REFITTING OPERATION

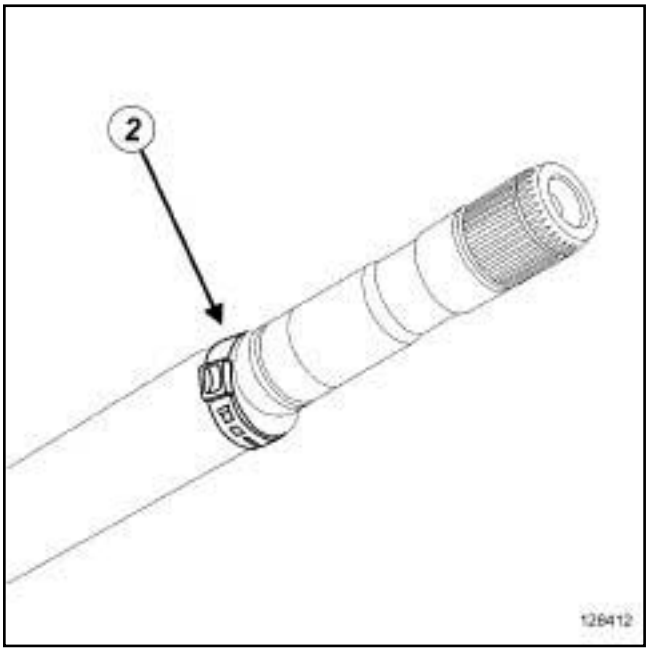

128412

❑ Fit the small tightening clip (**2**) to the driveshaft.

JR5

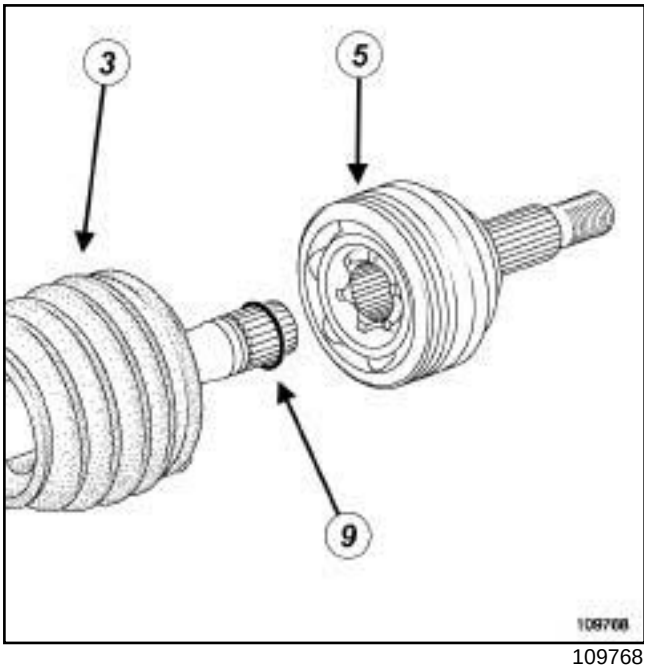

109768

- ❑ Lightly lubricate the driveshaft using the **GREASE** supplied with the gaiter to facilitate its fitting.
- ❑ Fit the gaiter (**3**) onto the driveshaft.
- ❑ Refit:
  - the new lock ring (**9**) ,
  - the stub axle bowl (**5**) to the driveshaft by tapping the stub axle bowl using a brass drift until the lock ring clicks into place behind the ball hub.
- ❑ Spread the quantity of grease around the gaiter and the stub axle bowl.
- ❑ Insert the lips of the gaiter into the grooves of the stub axle bowl and driveshaft.

> Note:
>
> Check that the gaiter lip is correctly positioned in the groove of the driveshaft.

- ❑ Move the seal by hand to check that the edges are positioned correctly.
- ❑ Insert a smooth rod with a rounded end between the gaiter and the stub axle bowl to regulate the amount of air inside the joint.
- ❑ Fit:
  - the small securing clip on the driveshaft gaiter,
  - the big securing clip on the driveshaft gaiter.

CAILLEAU « click » clips

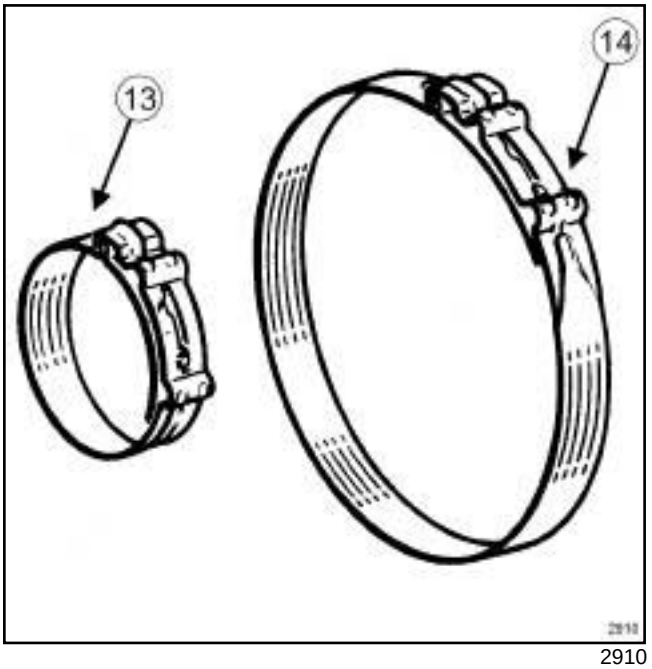

2910

- ❑ Tighten the small clip (**13**) and the big clip (**14**) until they click, using the tool.

OETIKER clips

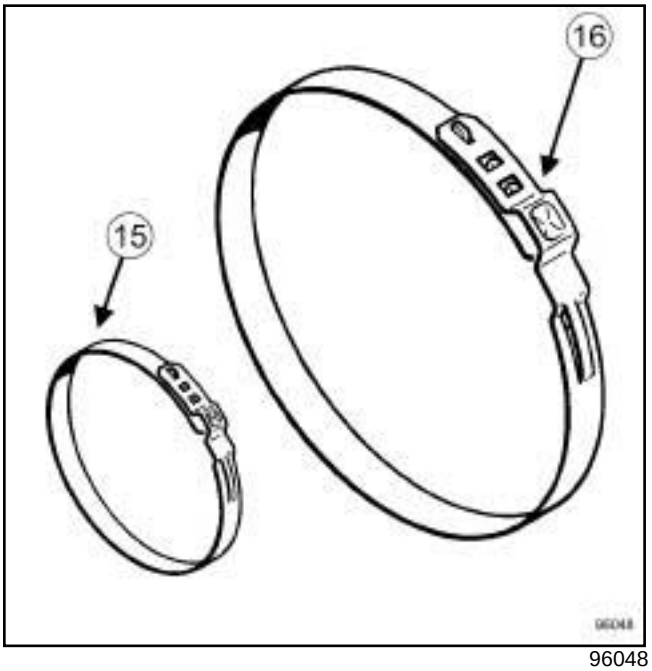

96048

- ❑ Tighten the small clip (**15**) and the big clip (**16**) using the tool.

JR5

Position 1 - Pre-tightening and positioning of the clip

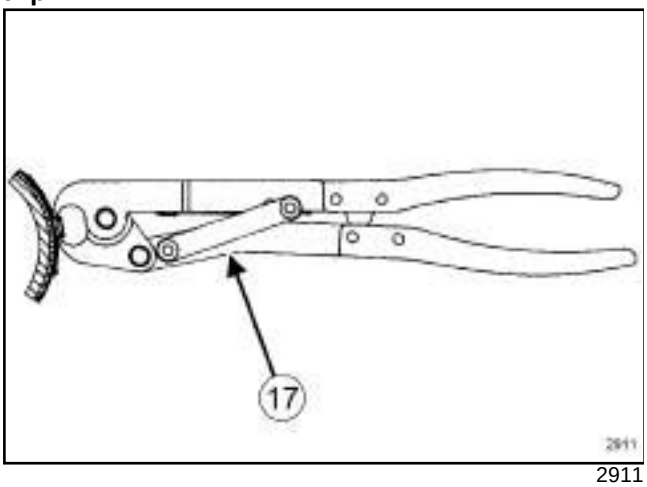

2911

❑ Put the linkage (**17**) in the lower position, and close the pliers fully. The pre-tightened clip slides onto the gaiter and can be positioned.

Position 2 - Tightening

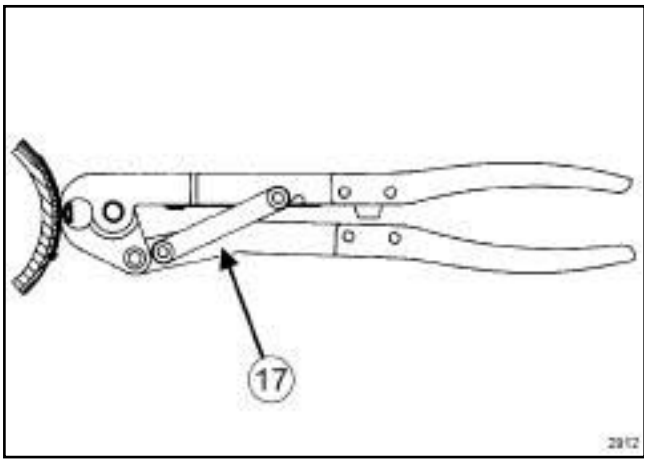

2912

❑ Put the linkage (**17**) in the upper position, and close the pliers fully.

III - FINAL OPERATION

❑ Refit the driveshaft on the side concerned (see **29A**, **Driveshafts**, **Front right-hand driveshaft: Removal - Refitting**, page **29A-4**) or (see **29A**, **Driveshafts**, **Front left-hand driveshaft: Removal - Refitting**, page **29A-1**) .

JR5

Equipment required
parts washer

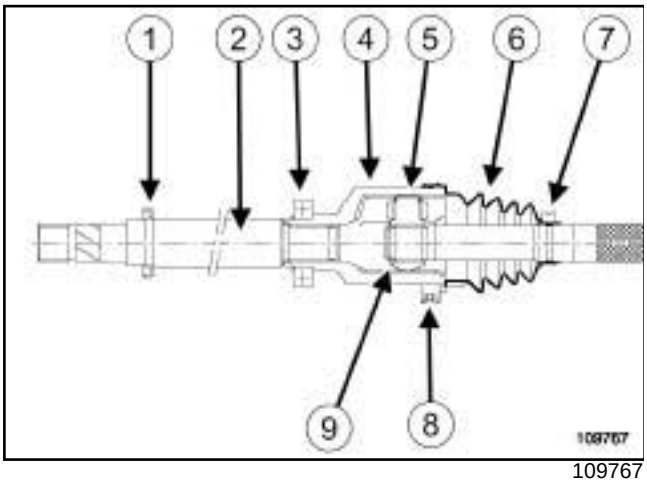

109767

(**1**)	Deflector
(**2**)	Driveshaft
(**3**)	Relay shaft bearing
(**4**)	Driveshaft yoke sleeve
(**5**)	Spider
(**6**)	Driveshaft gaiter
(**7**)	Small securing clip
(**8**)	Big securing clip
(**9**)	Lock ring

IMPORTANT
Wear leaktight gloves (Nitrile type) for this operation.

REMOVAL

I - REMOVAL PREPARATION OPERATION

❑ Remove the front right-hand driveshaft (see **29A**, **Driveshafts**, **Front right-hand driveshaft: Removal - Refitting**, page **29A-4**) .

II - REMOVAL OPERATION

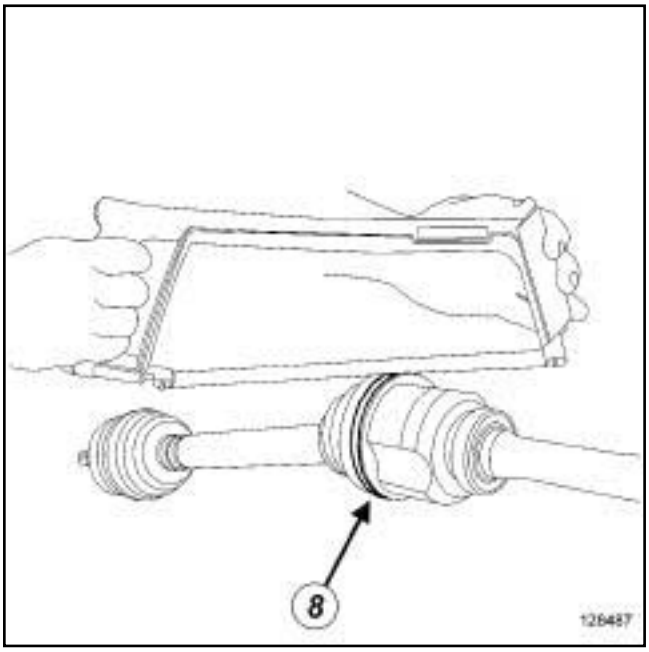

128487

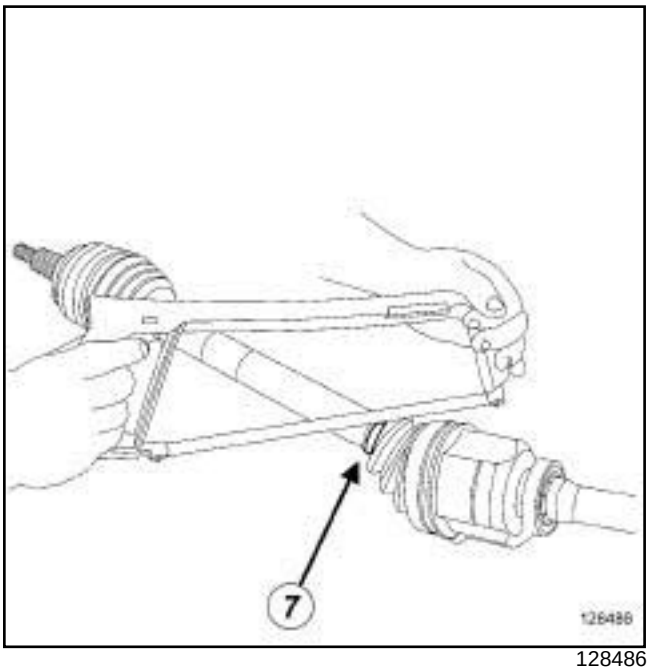

128486

❑ Cut the big securing clip (**8**) and the small securing clip (**7**) using cutting pliers or a metal saw, taking care not to damage the yoke sleeve or the driveshaft.

❑ Push back the gaiter to release the driveshaft yoke sleeve.

JR5

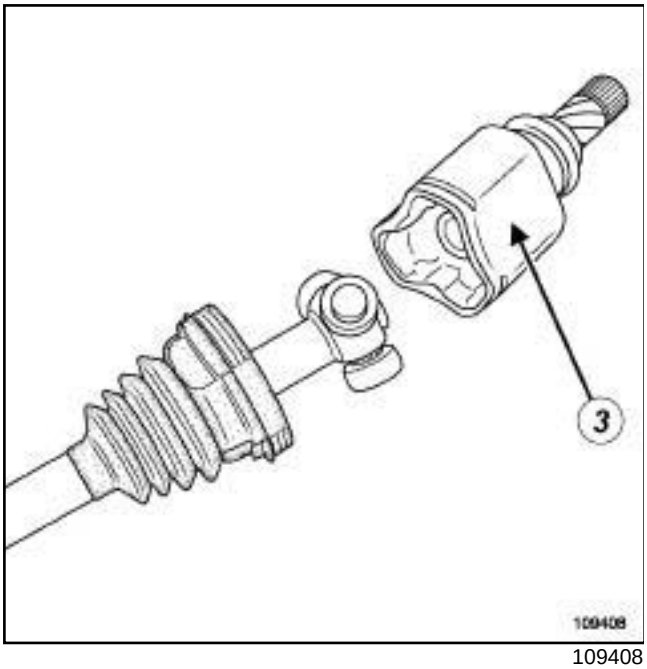

109408

❑ Remove the driveshaft yoke sleeve (**3**) .

Note:

- Since the driveshaft yoke sleeve does not have a stop tab, it can be removed without being forced.
- Do not remove the rollers from their respective bushings as the rollers and needles are matched and should never be interchanged.

❑ Remove as much grease as possible from inside the yoke sleeve.

Note:

Never use thinner to remove grease.

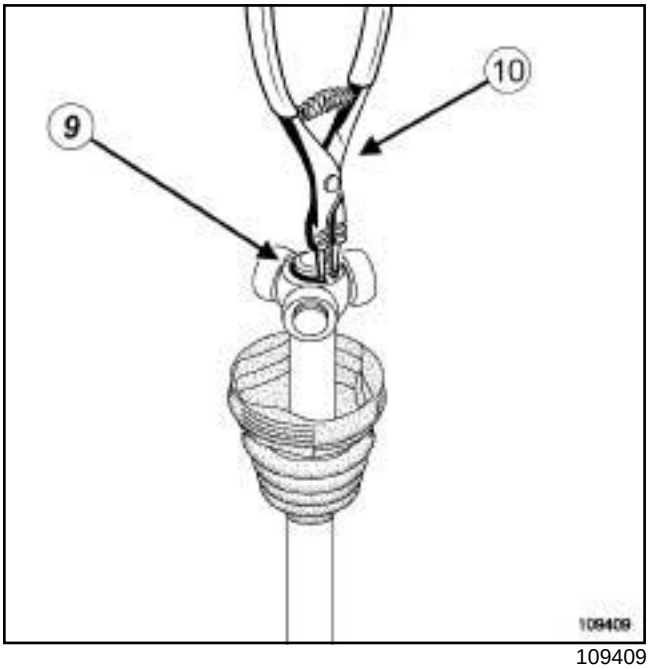

109409

❑ Remove the lock ring (**9**) using **circlip pliers** (**10**) .

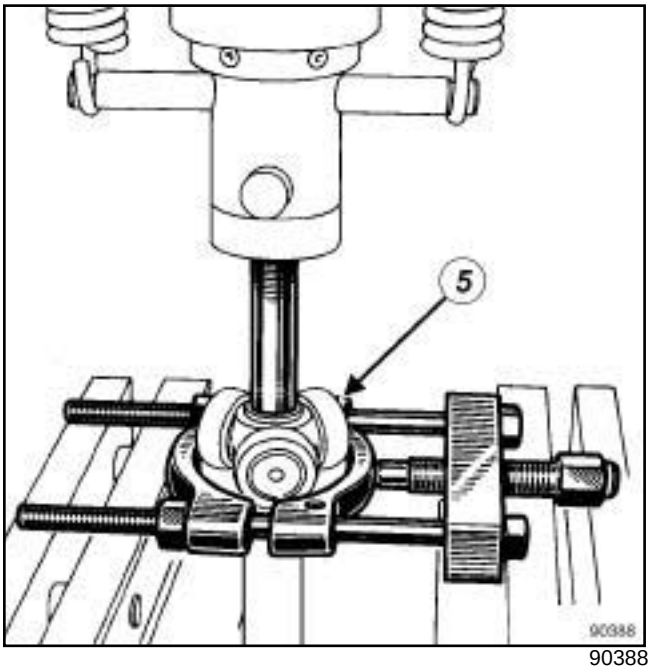

90388

❑ Extract the spider (**5**) using a **press** and a **releasing type extractor**.

Note:

Mark the position of the spider before extracting it.

❑ Remove the driveshaft gaiter from the driveshaft.

JR5

REFITTING

I - REFITTING PREPARATION OPERATION

- **parts always to be replaced: Front right-hand driveshaft gaiter, gearbox side**.
- **parts always to be replaced: gearbox side front driveshaft seal locking ring**.
- Always replace:
  - the big securing clip,
  - the small securing clip.
- Use a **parts washer** to clean the driveshaft, the spider and the driveshaft yoke sleeve.

II - REFITTING OPERATION

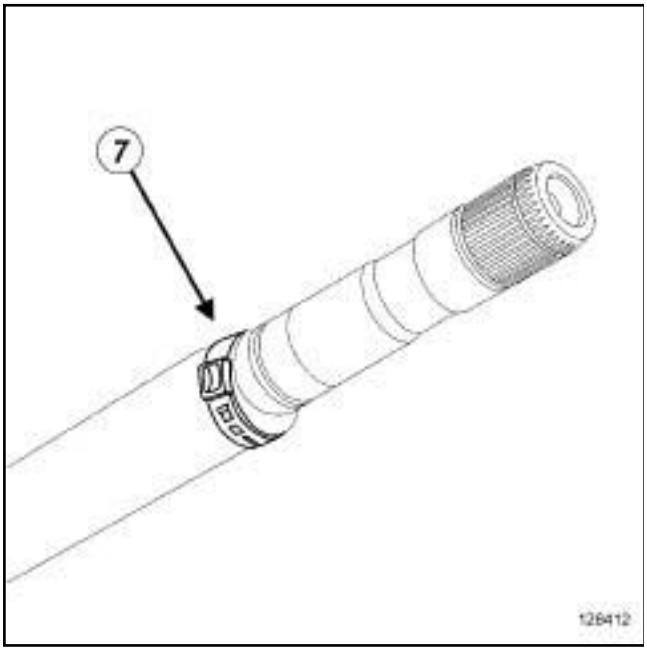

128412

- Fit the small tightening clip (**7**) to the driveshaft.
- Lightly lubricate the driveshaft using the **GREASE** supplied with the gaiter to facilitate its fitting.

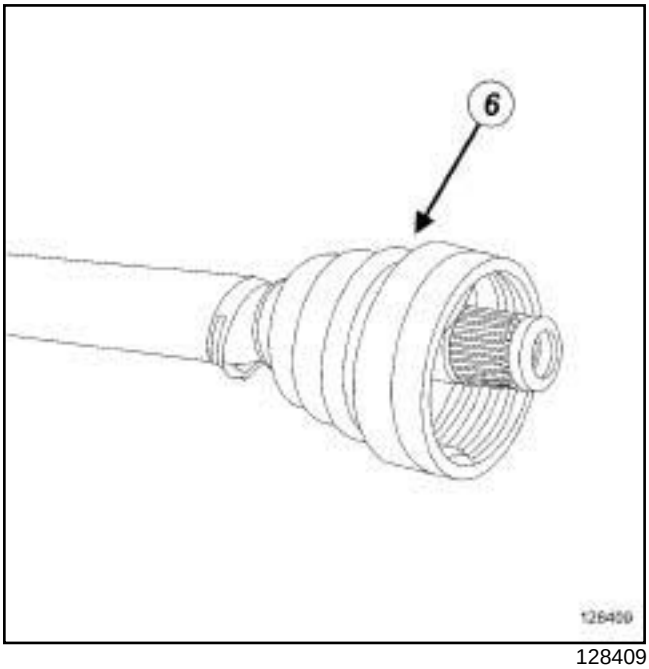

128409

- Refit the gaiter (**6**) onto the driveshaft.
- Insert the gaiter lip into the groove of the driveshaft.

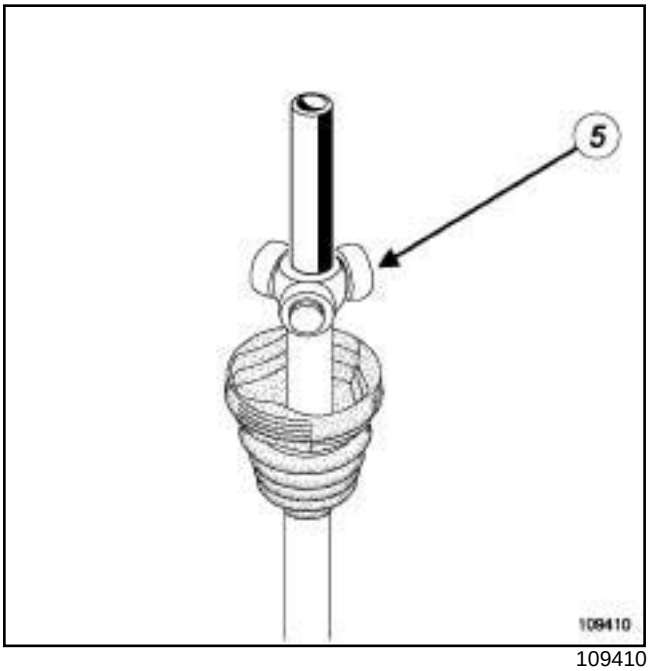

109410

- Refit the spider (**5**) in the position marked during removal.
- Refit a new lock ring using **circlip pliers**.
- Divide the quantity of grease between the gaiter and the driveshaft yoke sleeve.
- Fit the driveshaft yoke sleeve onto the spider.

JR5

❑ Position the gaiter lip into the groove of the yoke sleeve.

> Note:
>
> Check that the gaiter lip is correctly positioned in the groove of the driveshaft.

❑ Fit:

- the small securing clip on the driveshaft gaiter,
- the big securing clip on the driveshaft gaiter.

CAILLEAU « click » clips

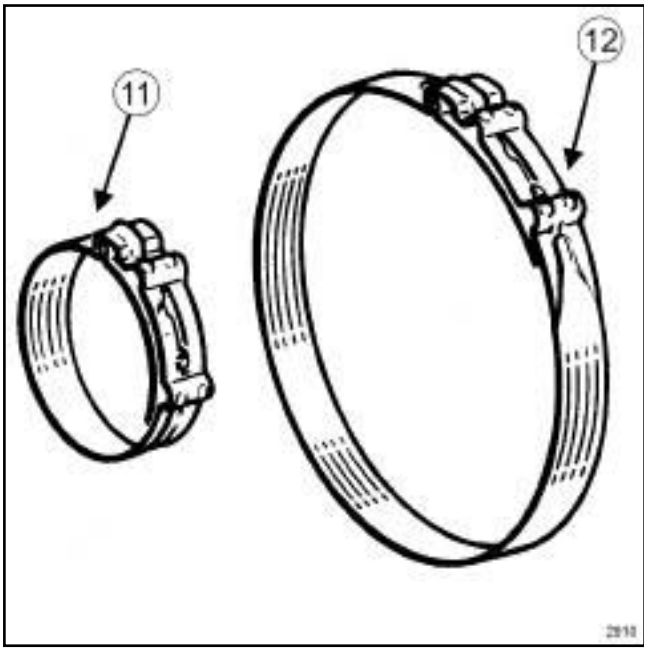

2910

❑ Tighten the small clip (**11**) and the big clip (**12**) until they click, using the tool.

OETIKER clips

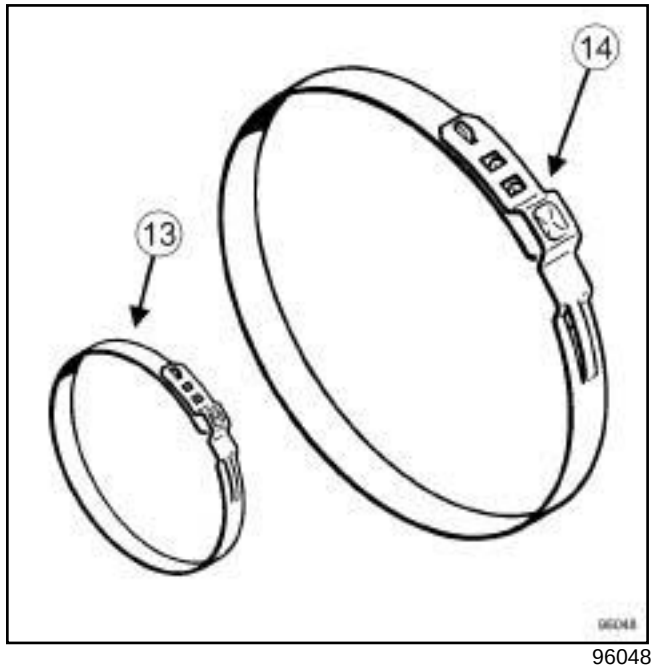

96048

❑ Tighten the small clip (**13**) and the big clip (**14**) using the tool.

Position 1 - Pre-tightening and positioning of the clip

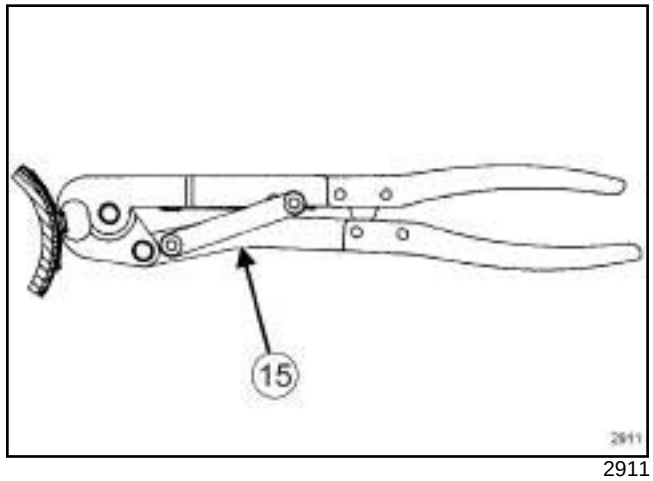

2911

❑ Put the linkage (**15**) in the lower position, and close the pliers fully. The pre-tightened clip slides onto the gaiter and can be positioned.

JR5

Position 2 - Tightening

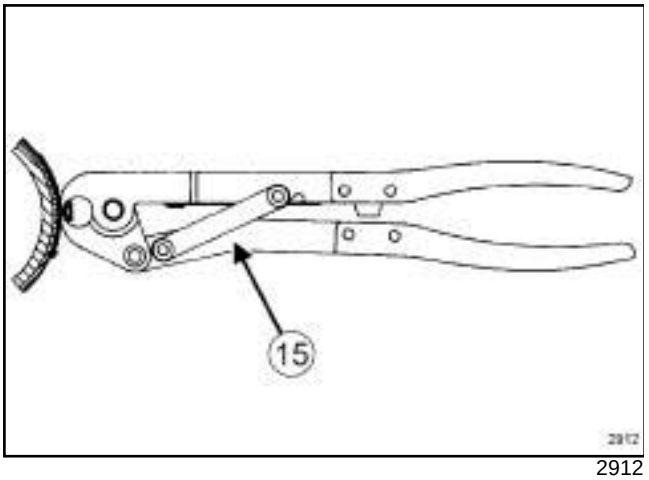

2912

❑ Put the linkage (**15**) in the upper position, and close the pliers fully.

III - FINAL OPERATION

❑ Refit the front right-hand driveshaft (see **29A**, **Driveshafts**, **Front right-hand driveshaft: Removal - Refitting**, page **29A-4**) .

JR5

Equipment required
parts washer

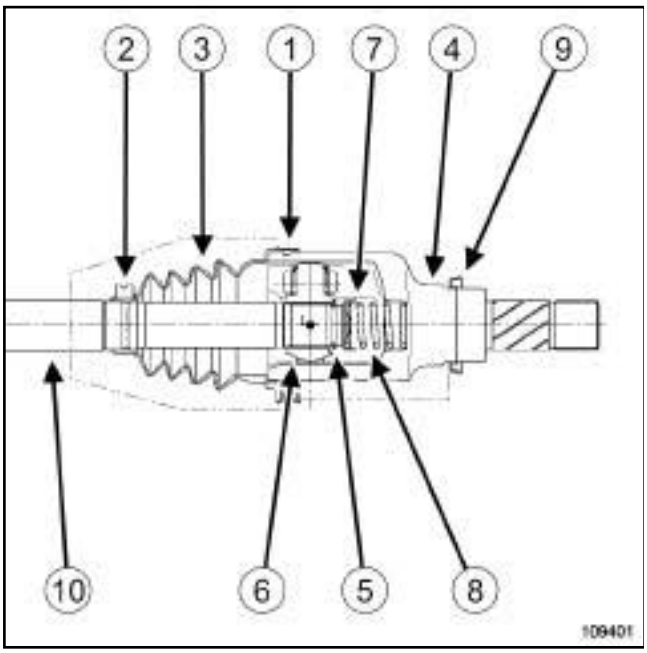

109401

(**1**)	Big securing clip
(**2**)	Small securing clip
(**3**)	Driveshaft gaiter
(**4**)	Driveshaft yoke sleeve
(**5**)	Lock ring
(**6**)	Spider
(**7**)	Cup
(**8**)	Cup spring
(**9**)	Deflector
(**10**)	Driveshaft

IMPORTANT
Wear leaktight gloves (Nitrile type) for this operation.

REMOVAL

I - REMOVAL PREPARATION OPERATION

❑ Remove the front left-hand driveshaft (see **29A**, **Driveshafts**, **Front left-hand driveshaft: Removal - Refitting**, page **29A-1**) .

II - REMOVAL OPERATION

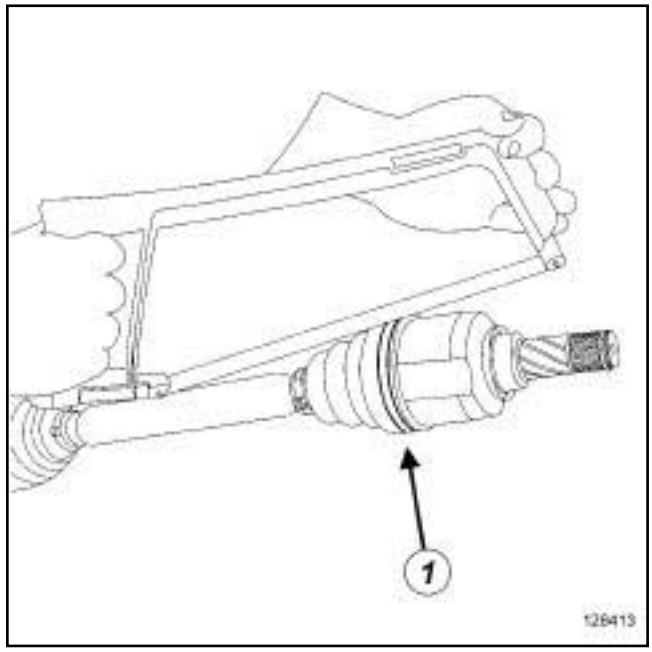

128413

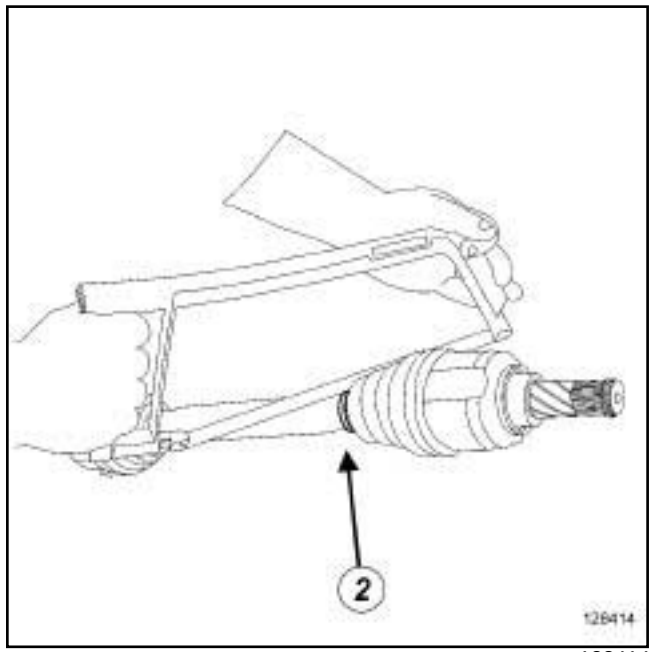

128414

❑ Cut the big securing clip (**1**) and the small securing clip (**2**) using cutting pliers or a metal saw, taking care not to damage the yoke sleeve or the driveshaft.

❑ Push back the driveshaft gaiter to release the driveshaft yoke sleeve.

JR5

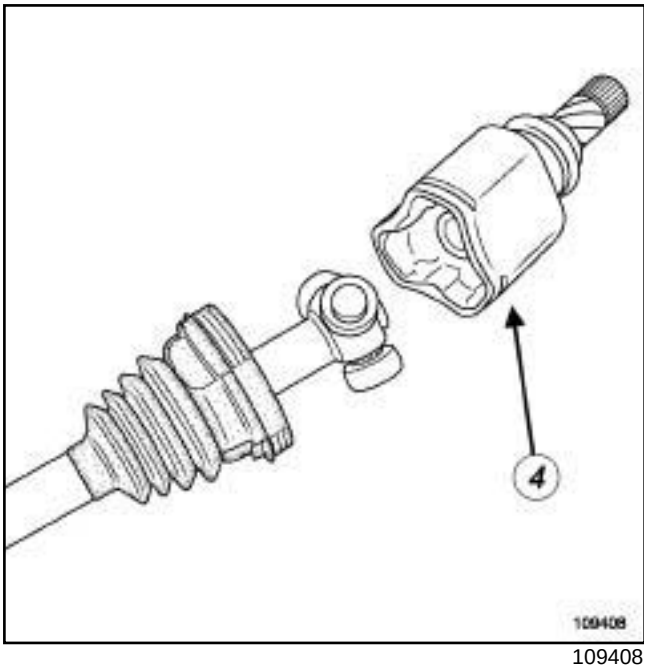

109408

❑ Remove the driveshaft yoke sleeve (**4**) .

Note:

- Since the driveshaft yoke sleeve does not have a stop tab, it can be removed without being forced,

- do not remove the rollers from their respective bushings as the rollers and needles are matched and should never be interchanged.

❑ Remove as much grease as possible.

Note:

Never use thinner to remove grease.

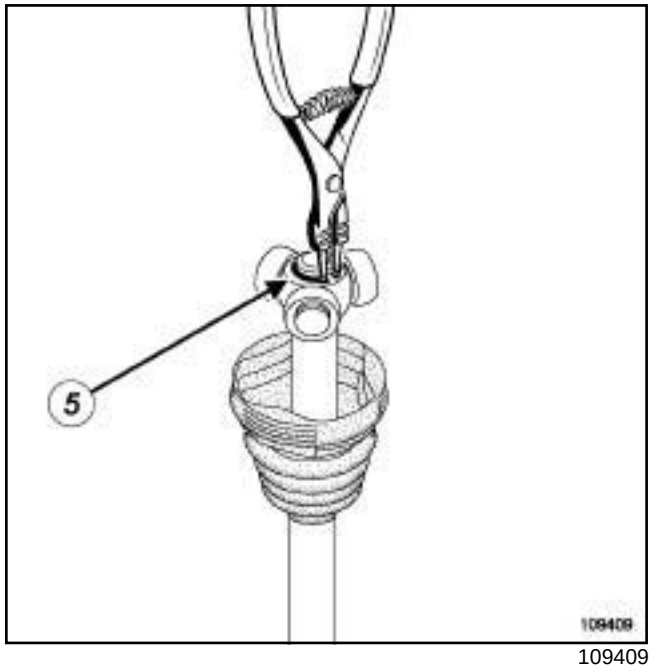

109409

❑ Remove the lock ring (**5**) using **circlip pliers**.

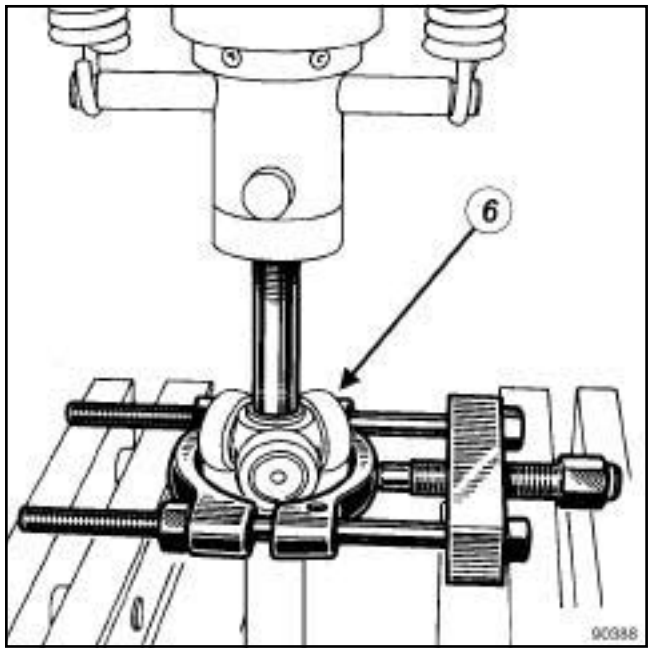

90388

❑ Remove the spider (**6**) using a press and a releasing type extractor.

Note:

Mark the position of the spider before extracting it.

❑ Remove:

- the gaiter from the driveshaft,

- the cup equipped with the cup spring.

JR5

REFITTING

I - REFITTING PREPARATION OPERATION

- ❑ **parts always to be replaced: Front left-hand driveshaft gaiter, gearbox side**.
- ❑ **parts always to be replaced: gearbox side front driveshaft seal locking ring**.
- ❑ Always replace:
  - the cup,
  - the cup spring,
  - the big securing clip,
  - the small securing clip.
- ❑ Use a **parts washer** to clean the driveshaft, the spider and the driveshaft yoke sleeve.

II - REFITTING OPERATION

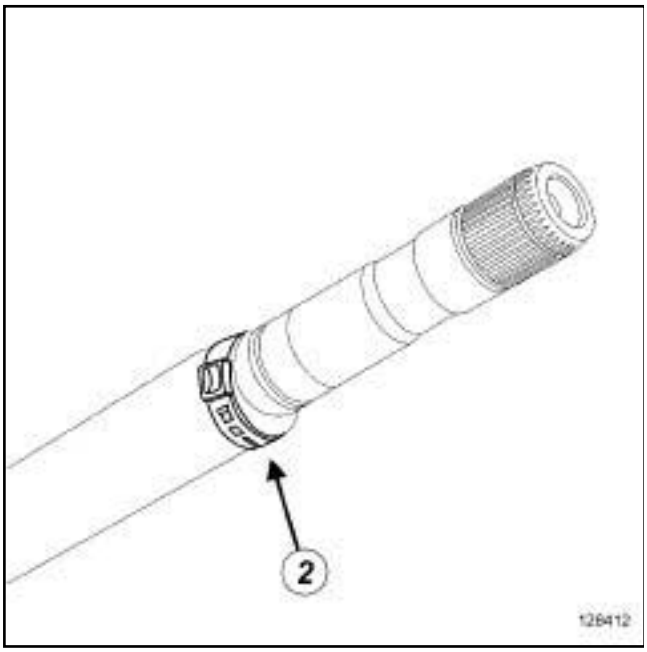

128412

- ❑ Fit the small tightening clip (**2**) to the driveshaft.
- ❑ Lightly lubricate the driveshaft using the **GREASE** supplied with the gaiter to facilitate its fitting.

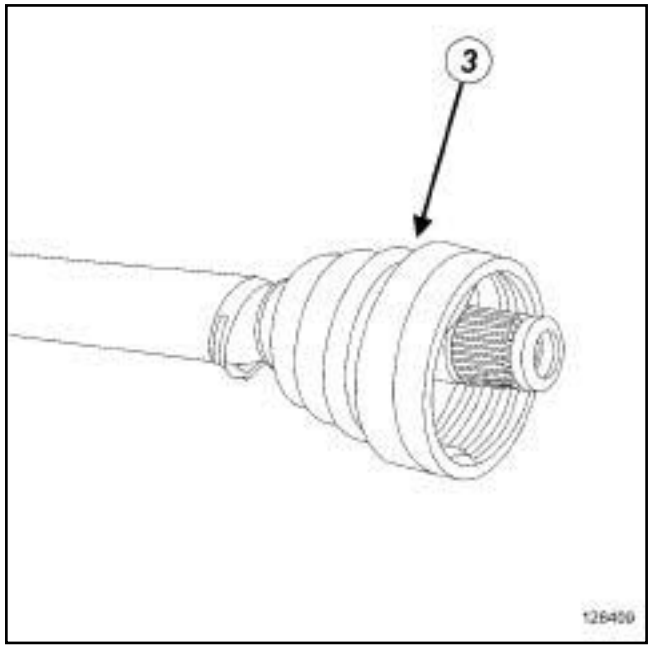

128409

- ❑ Refit the gaiter (**3**) onto the driveshaft.
- ❑ Insert the gaiter lip into the groove of the driveshaft.

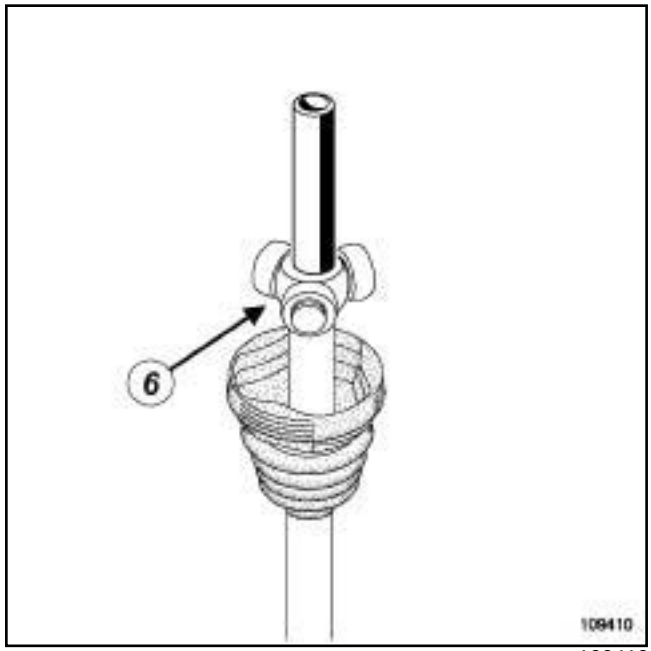

109410

- ❑ Refit:
  - the spider (**6**) in the position marked during removal,
  - a new lock ring using **circlip pliers**.

JR5

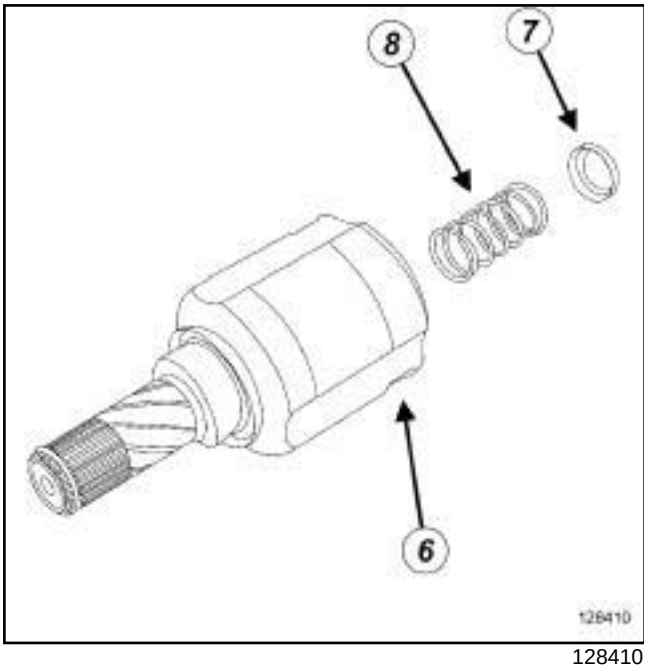

128410

❑ Refit:

- the cup (**7**) onto the cup spring (**8**) ,
- the cup spring equipped with the cup into the drive-shaft yoke sleeve (**6**) .

❑ Divide the quantity of grease between the driveshaft gaiter and the yoke sleeve.

❑ Fit the driveshaft yoke sleeve onto the spider.

❑ Position the driveshaft gaiter lip into the groove of the yoke sleeve.

> Note:
>
> Check that the gaiter lip is correctly positioned in the groove of the driveshaft.

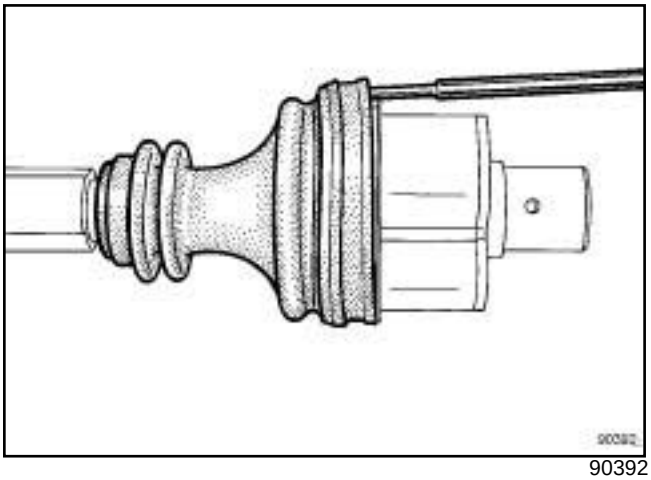

90392

❑ Insert a smooth rod with a rounded end between the gaiter and driveshaft to control the amount of air inside the joint.

❑ Fit:

- the small securing clip on the driveshaft gaiter,
- the big securing clip on the driveshaft gaiter.

CAILLEAU « click » clips

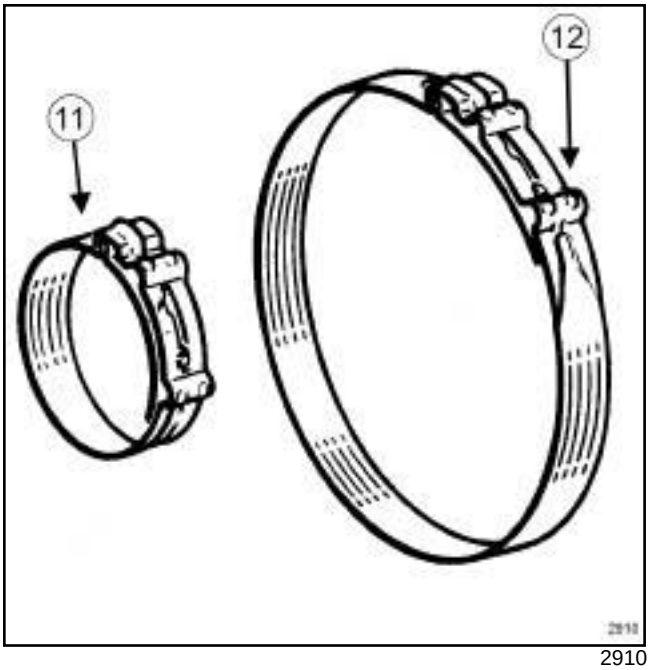

2910

❑ Tighten the small clip (**11**) and the big clip (**12**) until they click, using the tool.

JR5

OETIKER clips

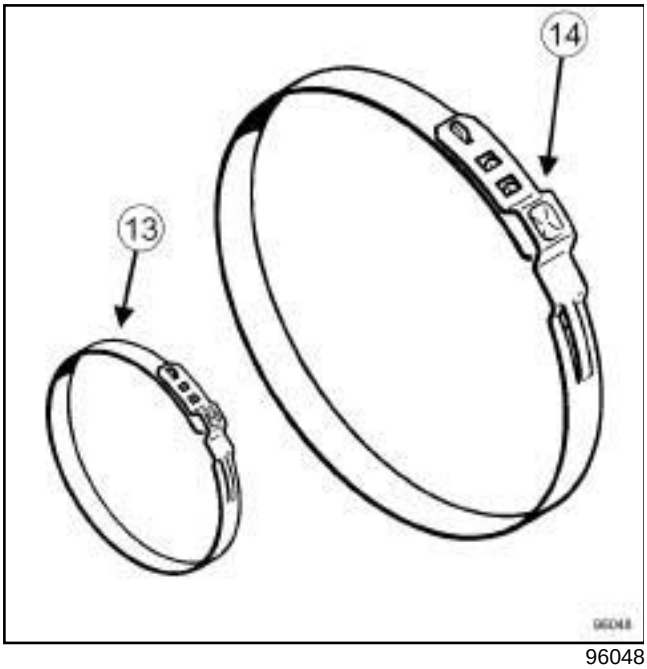

96048

❑ Tighten the small clip (**13**) and the big clip (**14**) using the tool.

Position 1 - Pre-tightening and positioning of the clip

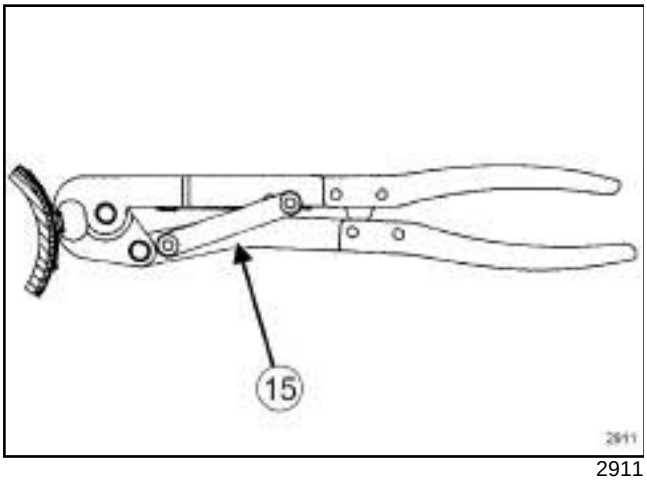

2911

❑ Put the linkage (**15**) in the lower position, and close the pliers fully. The pre-tightened clip slides onto the gaiter and can be positioned.

Position 2 - Tightening

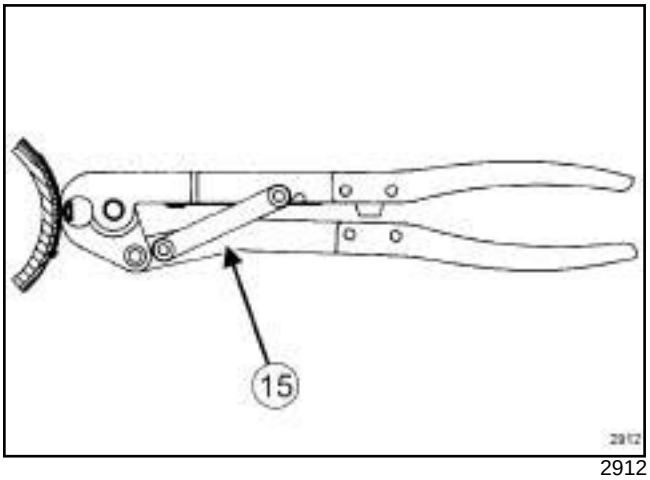

2912

❑ Put the linkage (**15**) in the upper position, and close the pliers fully.

III - FINAL OPERATION

❑ Refit the front left-hand driveshaft (see **29A**, **Driveshafts**, **Front left-hand driveshaft: Removal - Refitting**, page **29A-1**) .

RENAULT

3 Chassis

30A GENERAL INFORMATION

31A FRONT AXLE COMPONENTS

33A REAR AXLE COMPONENTS

35A WHEELS AND TYRES

36A STEERING ASSEMBLY

36B POWER ASSISTED STEERING

37A MECHANICAL COMPONENT CONTROLS

38C ANTI-LOCK BRAKING SYSTEM

X79

NOVEMBER 2009 EDITION ANGLAISE

"The repair procedures given by the manufacturer in this document are based on the technical specifications current when it was prepared.

The procedures may be modified as a result of changes introduced by the manufacturer in the production of the various component units and accessories from which the vehicles are constructed".

All rights reserved by Renault.

Copying or translating, in part or in full, of this document or use of the service part reference numbering system is forbidden without the prior written authority of Renault.

© Renault s.a.s 2007

DUSTER - Chapitre 3

Contents

Pages

30A GENERAL INFORMATION

Brake circuit: Operating diagram 30A-1

Brake circuit: Precautions for the repair 30A-2

Braking circuit: Bleed 30A-4

Brake circuit: Tightening torque 30A-6

Rigid brake pipe: Repair 30A-7

Brake fluid: Specifications 30A-12

Brake: Specifications 30A-13

Steering: Tightening torque 30A-14

Axle assemblies: Check 30A-15

Front axle system: Tightening torque 30A-16

Front axle system: Adjustment 30A-18

Rear axle system: Tightening torque 30A-19

31A FRONT AXLE COMPONENTS

Front axle components: Precautions for the repair 31A-1

Front brake pads: Removal - Refitting 31A-3

Front brake hose: Removal - Refitting 31A-5

31A FRONT AXLE COMPONENTS

Front brake calliper: Removal - Refitting 31A-7

Front brake calliper: Repair 31A-9

Front brake calliper mounting: Removal - Refitting 31A-11

Front brake disc protector: Removal - Refitting 31A-13

Front brake disc: Removal - Refitting 31A-15

Front brake disc: Description 31A-18

Hydraulic unit - master cylinder brake pipe: Removal - Refitting 31A-19

Hydraulic unit - underbody union brake pipe: Removal - Refitting 31A-21

Hydraulic unit - front left-hand calliper brake pipe: Removal - Refitting 31A-23

Hydraulic unit - front right-hand calliper brake pipe: Removal - Refitting 31A-25

Front driveshaft hub carrier: Removal - Refitting 31A-27

Front hub carrier bearing: Removal - Refitting 31A-30

Front shock absorber and spring: Removal - Refitting 31A-33

Contents

31A FRONT AXLE COMPONENTS

Filter unit assembly: Removal - Refitting 31A-38

Front driveshaft lower arm: Removal - Refitting 31A-39

Front driveshaft lower arm ball joint: Check 31A-41

Front axle subframe: Removal - Refitting 31A-42

Front anti-roll bar: Removal - Refitting 31A-46

33A REAR AXLE COMPONENTS

Rear axle components: Precautions for the repair 33A-1

Rear brake lining: Removal - Refitting 33A-2

Rear brake cylinder: Removal - Refitting 33A-5

Rear brake drum: Removal - Refitting 33A-7

Rear brake drum: Description 33A-9

Rigid brake pipe: Removal - Refitting 33A-10

Shock absorber: Removal - Refitting 33A-12

Rear suspension spring: Removal - Refitting 33A-14

Rear axle rubber bearing: Removal - Refitting 33A-16

Complete rear axle system: Removal - Refitting 33A-19

35A WHEELS AND TYRES

Wheel: Removal - Refitting 35A-1

Wheel: Balancing 35A-4

35A WHEELS AND TYRES

Tyre: Precautions for the repair 35A-7

Tyres: Identification 35A-8

Tyres: Removal - Refitting 35A-9

Tyre: Repair 35A-11

Wheel rim: Identification 35A-14

Emergency spare wheel carrier: Removal - Refitting 35A-15

36A STEERING ASSEMBLY

Steering: List and location of components 36A-1

Steering: Precautions for the repair 36A-2

Track rod: Removal - Refitting 36A-4

Axial ball joint linkage: Removal - Refitting 36A-5

Steering column: Removal - Refitting 36A-7

Steering box gaiter: Removal - Refitting 36A-9

Bulkhead seal: Removal - Refitting 36A-10

Steering column adjustment handle: Removal - Refitting 36A-11

Steering wheel: Removal - Refitting 36A-13

36B POWER ASSISTED STEERING

Power-assisted steering pump pressure: Check 36B-1

Power-assisted steering pump: Removal - Refitting 36B-5

Contents

36B POWER ASSISTED STEERING

Power-assisted steering pump pulley: Removal - Refitting 36B-12

Power-assisted steering pump assembly: Removal - Refitting 36B-13

Power-assisted steering pipes: Removal - Refitting 36B-15

37A MECHANICAL COMPONENT CONTROLS

Brake mechanism: Precautions for the repair 37A-1

Master cylinder: Removal - Refitting 37A-2

Master cylinder - front right-hand calliper brake pipe: Removal - Refitting 37A-5

Master cylinder - front left-hand calliper brake pipe: Removal - Refitting 37A-7

Brake servo non-return valve: Removal - Refitting 37A-9

Brake servo: Removal - Refitting 37A-11

Vacuum pump: Removal - Refitting 37A-14

Pedal yoke: Removal - Refitting 37A-16

Accelerator pedal: Removal - Refitting 37A-20

Accelerator pedal cable: Removal - Refitting 37A-24

Brake pedal: Removal - Refitting 37A-26

Brake pedal switch: Removal - Refitting 37A-27

Parking brake lever: Removal - Refitting 37A-29

Parking brake lever: Adjustment 37A-30

37A MECHANICAL COMPONENT CONTROLS

Clutch control: List and location of components 37A-31

Clutch pedal: Removal - Refitting 37A-33

Clutch pedal switch: Removal - Refitting 37A-35

Clutch circuit: Bleed 37A-37

Clutch master cylinder: Removal - Refitting 37A-44

Clutch circuit: Removal - Refitting 37A-47

Gear control unit: Removal - Refitting 37A-50

Parking brake cables: Removal - Refitting 37A-53

Brake servo: Check 37A-55

38C ANTI-LOCK BRAKING SYSTEM

ABS: List and location of components 38C-1

ABS: Precautions for the repair 38C-4

Hydraulic brake unit: Removal - Refitting 38C-5

Front wheel speed sensor: Removal - Refitting 38C-7

Rear wheel speed sensor: Removal - Refitting 38C-9

« X » braking system with load-sensitive compensator

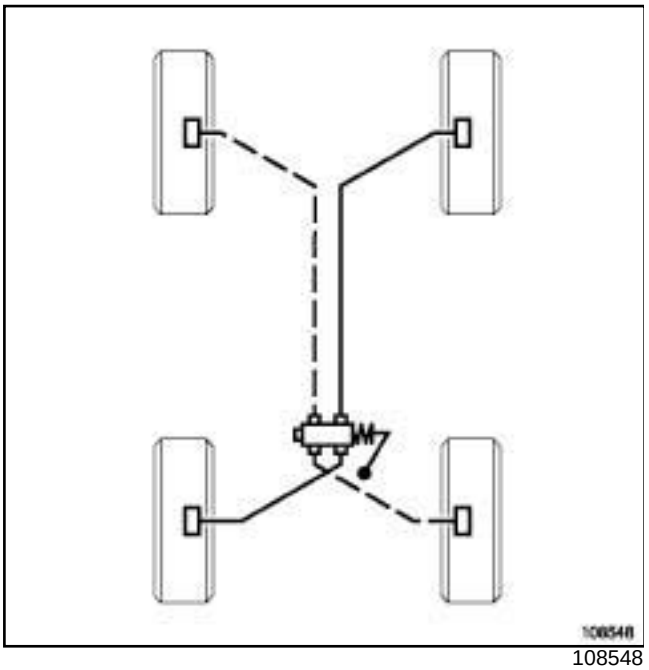

108548

IMPORTANT

This is a diagram of the general principle, do not use it as a reference for take-off points or circuit allocation. When replacing components in a vehicle's braking circuit, always mark the pipes before removing them.

« X » braking system with ABS

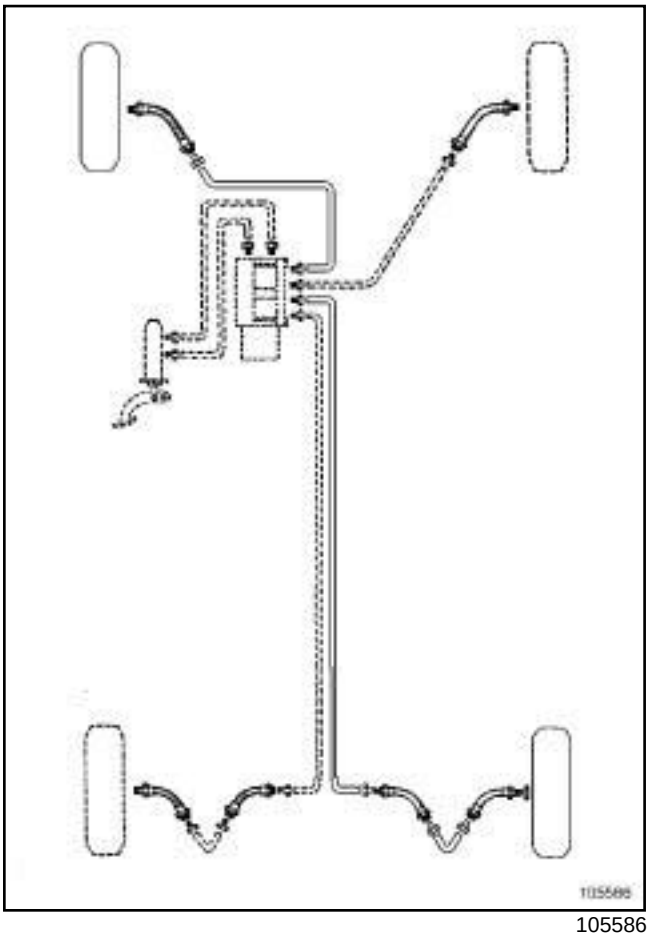

105586

IMPORTANT

This is a diagram of the general principle, do not use it as a reference for take-off points or circuit allocation. When replacing components in a vehicle's braking circuit, always mark the pipes before removing them.

I - SAFETY

1 - Advice to be followed before any operation

For an operation requiring the use of a lift, follow the safety advice (see **Vehicle: Towing and lifting**) (02A, Lifting equipment).

The brake regulation circuit must be free of all hydraulic and electrical faults.

In case of incorrect handling, the brake fluid can cause serious injury and damage. Follow the manufacturer's instructions for brake fluid.

To prevent dust from entering the master cylinder reservoir and the brake circuit, the plug must be removed just before filling and closed immediately afterwards,

2 - Instructions to be followed during the operation

Do not press on the brake pedal during work on the brake system.

If, during work on the brake system, any damage on any part is observed, it must be repaired before driving the vehicle again.

Brake fluid is highly corrosive. Ensure any brake fluid spilt on parts of the vehicle is cleaned off.

Use brake fluids that comply with the Renault standard (see **Vehicle: Parts and consumables for the repair**) .

Check the brake fluid levels in the braking circuit and the bleeding device.

Check that the pressure of the bleeding device is between **1.5 bar and 2 bar**.

II - CLEANLINESS

1 - Advice to be followed before any operation

Protect any bodywork components that risk being damaged by brake fluid with a cover.

2 - Instructions to be followed during the operation

Fit blanking plugs recommended for the Siemens K9K injection system at the end of each pipe and in all the openings of the disconnected components of the brake circuit.

Clean around the braking system with **BRAKE CLEANER** (see **Vehicle: Parts and consumables for the repair**) (04B, Consumables - Products).

WARNING

Prepare for the flow of fluid, and protect the surrounding components.

Do not allow friction materials to come into contact with grease, oil or other lubricants and cleaning products which are mineral oil based.

III - GENERAL RECOMMENDATIONS

When replacing brake pads, always replace the pads on the other side as well.

When replacing a disc, always replace the disc on the opposite side.

When replacing brake discs, you must replace the brake pads.

WARNING

In order not to damage the brake hose:

- do not tension the hose,
- do not twist the hose,
- check that there is no contact with the surrounding components, regardless of the position of the wheels.

IMPORTANT

To avoid any accident, bring the pistons, brake pads and brake discs into contact by depressing the brake pad several times.

Always replace the rigid brake pipe clips.

Reminder:

- The pipes between the master cylinder, callipers and the hydraulic assembly are connected using threaded unions with a metric thread.
- Therefore, only parts specified in the Parts Catalogue for this vehicle should be used.

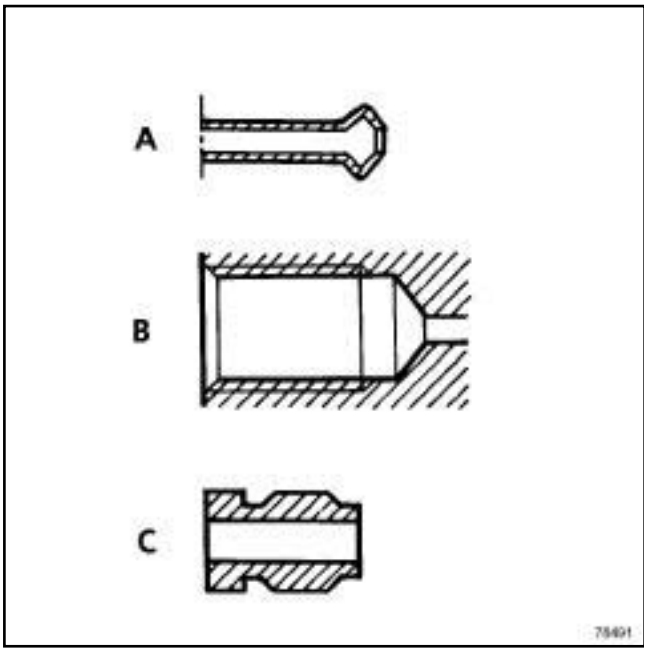

78491

Parts identification:

- shape of steel or copper pipe end piece (A),
- shape of connecting points on components (B),
- shape of unions (C): **11 mm** hexagonal.

Precautions to be taken before and during the brake circuit bleeding operation:

- use brake fluid which conforms to the Renault standard (see **Vehicle: Parts and consumables for the repair**) (04B, Consumables - Products),
- check the brake fluid levels in the brake circuit and the bleeding device,
- the braking regulation circuit must be free from all hydraulic and electrical faults,
- check that the pressure of the bleeding device is between **1.5 bars and 2 bars**.

Equipment required
pedal press
brake circuit bleeding device

IMPORTANT

To avoid all risk of damage to the systems, apply the safety and cleanliness instructions and operation recommendations before carrying out any repair (see **30A**, **General information**, **Brake circuit: Precautions for the repair**, page **30A-2**) .

This procedure must be applied after one of the following components has been removed or replaced:

- the master cylinder,
- the brake fluid,
- the hydraulic unit,
- a rigid pipe,
- a hose,
- the reservoir,
- a calliper.

WARNING

Switch off the vehicle ignition so as not to activate the hydraulic unit solenoid valves when bleeding the brake circuit.

WARNING

The level must be between the «MIN» and « MAX » markings on the reservoir.

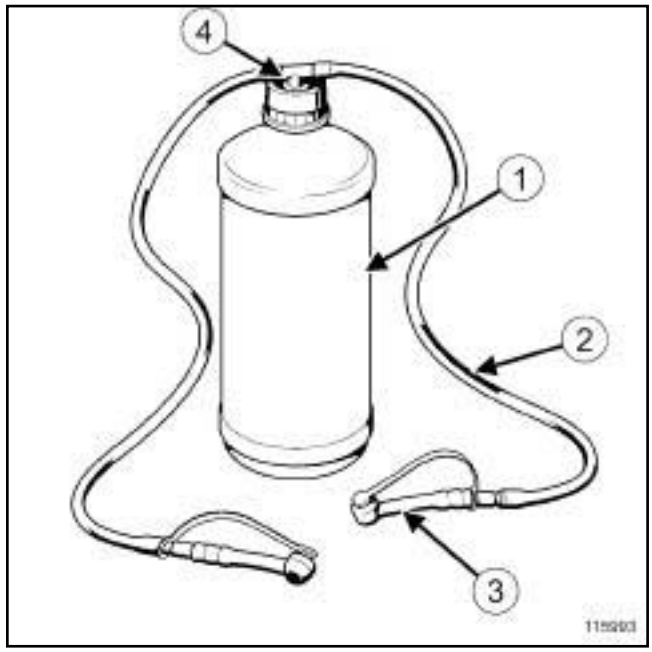

115993

❑ Use locally produced containers to collect the used brake fluid.

Front and rear callipers:

- 2 washer fluid containers (**1**) (1 litre),
- **4 mm** diameter transparent pipes (**2**) ,
- 4 pipettes (**3**) ,
- 2 T-unions (**4**) .

Note:

The new hydraulic unit is pre-filled.

When working on one of the following components, position a **pedal press** to limit the outflow of brake fluid and prevent any air from entering the master cylinder and the circuits downstream of the master cylinder:

- hydraulic unit,
- pipes between the hydraulic unit and brake callipers,
- brake hoses,
- brake calliper.

Remove the **pedal press** before carrying out the braking system bleeding procedure.

❑ Position the vehicle on a two-post lift (see **Vehicle: Towing and lifting**) (02A, Lifting equipment).

❑ Switch off the vehicle ignition.

- ❏ Connect the **brake circuit bleeding device** (after having received Renault approval) to the master cylinder reservoir (see the instructions for the equipment).
- ❏ Pressurise the brake circuit.
- ❏ Adjust the pressure to between **1.5 bar** < P < **2 bar** for **3 minutes** to stabilise it in the braking circuit.
- ❏ Close the circuit between the bleed screw and brake fluid reservoir without dumping the pressure.

> Note:
>
> The circuit between the bleed screw and brake fluid reservoir is closed in different ways depending on the type of equipment used:
>
> - valve,
> - switch.

- ❏ Fit the bleed containers to the four bleed screws of the callipers.
- ❏ Undo the calliper bleed screws:
  - front left-hand,
  - front right-hand,
  - rear left-hand,
  - rear right-hand.
- ❏ Open the circuit between the bleed screw and brake fluid reservoir and allow the liquid to run until all the air bubbles have been released.
- ❏ Tighten the bleed screws in the following order:
  - front left-hand,
  - front right-hand,
  - rear left-hand,
  - rear right-hand.
- ❏ Undo the calliper bleed screw:
  - front left-hand,
  - allow the fluid to run until all the air bubbles have been released,
  - tighten the bleed screw on the calliper.
- ❏ Carry out the previous operation on the callipers:
  - front right-hand,
  - rear left-hand,
  - rear right-hand.
- ❏ Close the bleed screw to dump the pressure in the brake circuit.
- ❏ Remove the **brake circuit bleeding device** from the master cylinder reservoir.
- ❏ Check pedal travel and resistance. If it is not correct, finish bleeding the brake circuit with the help of a second operator. Start the bleed operation by bleeding the calliper that is the furthest away from the master cylinder:
  - hold down the brake pedal,
  - open the circuit bleed screw to release the air from the brake circuit,
  - close the circuit bleed screw,
  - release the brake pedal.
- ❏ Top up the brake fluid level in the reservoir, if necessary. Check the sealing of the front and rear bleed screws and ensure that the sealing covers are in place (see **30A**, **General information**, **Brake circuit: Tightening torque**, page **30A-6**) .
- ❏ During a road test, trigger braking regulation to confirm that the brake pedal travel is correct.
- ❏ Clean off any traces of brake fluid on the vehicle using **BRAKE CLEANING PRODUCT** (see **Vehicle: Parts and consumables for the repair**)

I - FRONT AND REAR BRAKES

Description	Tightening torque (N.m)
Front calliper bleed screw	**6**
Rear cylinder bleed screw	**6**
Front calliper inlet brake hose	**17**
Rear cylinder inlet brake pipes	**14**
Brake hose on brake pipe	**14**
Front brake guide pin bolt	**34**
Brake pipe on compensator	**14**
Brake pipe on master cylinder	**14**
Brake pipe on hose	**14**
Disc bolt	**14**
Cylinder bolt on brake back-plate	**14**

Description	Tightening torque (N.m)
Calliper support bolt	**107**

II - BRAKE CONTROL

Description	Tightening torque (N.m)
Brake servo nut	**21**
Master cylinder nuts	**21**
Master cylinder outlet pipe	**14**
Hydraulic unit bolt on its mounting	**8**
Hydraulic unit pipe unions	**14**
Parking brake lever nuts	**21**
Hydraulic unit mounting bolt on body	**21**
Compensator bolt	**12**

Equipment required
compressed air nozzle

Tightening torques ▽	
brake pipe bolts	**8 N.m**
underbody unions (female/male)	**6 N.m**

This procedure applies to copper pipes diameter **4.7 mm.**

Note:

This procedure does not apply to:

- hybrid pipes (pipe + hose),
- pipes with diameters **6 mm** and **8 mm.**

REPAIR

I - PIPE PREPARATION OPERATION

❑

WARNING
To avoid causing a breakdown in hydraulic brake circuit , do not squash or bend the rigid pipe when cutting.

❑ Cut the pipe to the recommended length using a tube cutter (see **Garage equipment catalogue).**

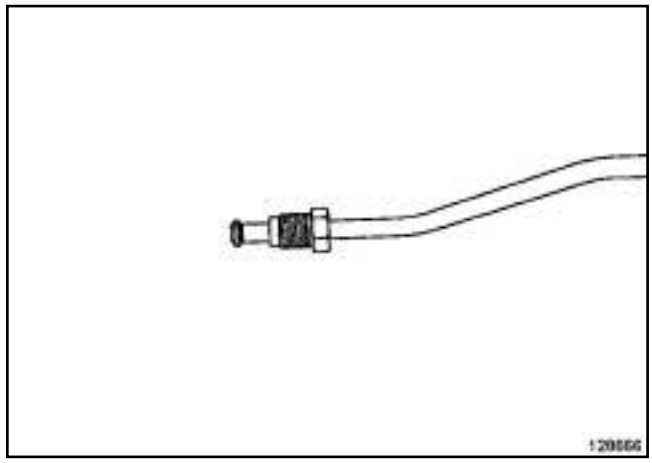

128666

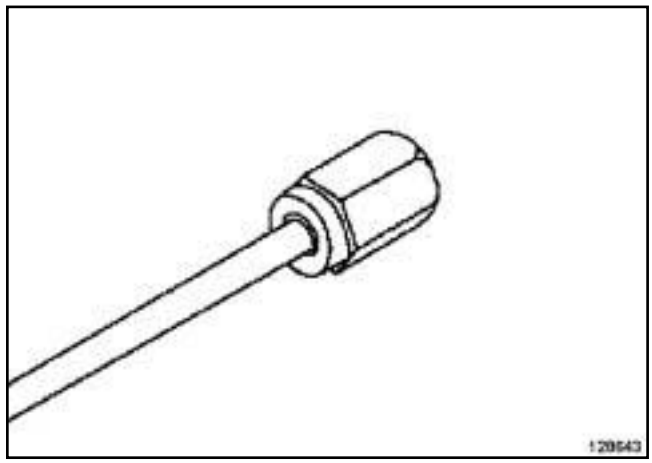

128643

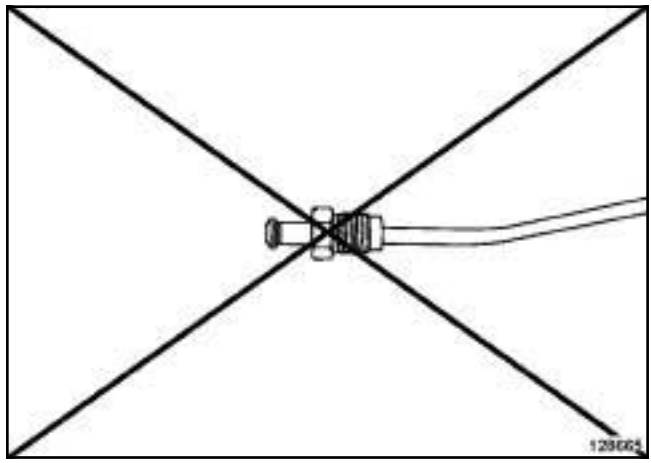

128665

❑ Put the nuts or bolts on the pipe before forming the rivets.

II - MAKING THE RIVETS

❑

Note:

To make the rivets, fit the rivet press in a vice.

- ❑ Fit the pipe in the rivet press (see **Garage Equipment Catalogue**).
- ❑ Adjust the length of the pipe to be shaped.
- ❑ Torque tighten the press end piece(**40 N.m).**

III - CHECKING THE RIVETS

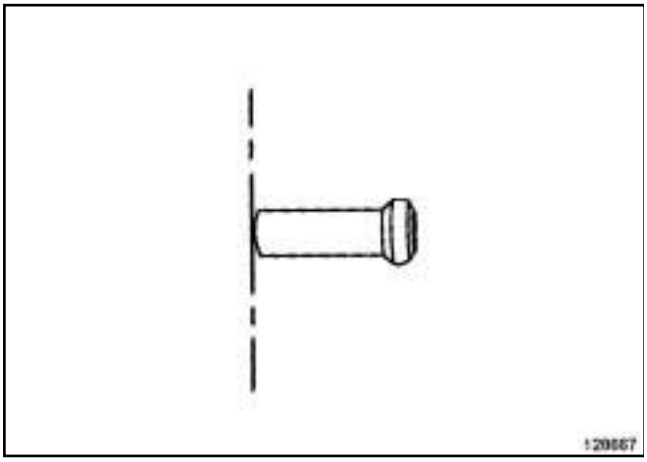

128667

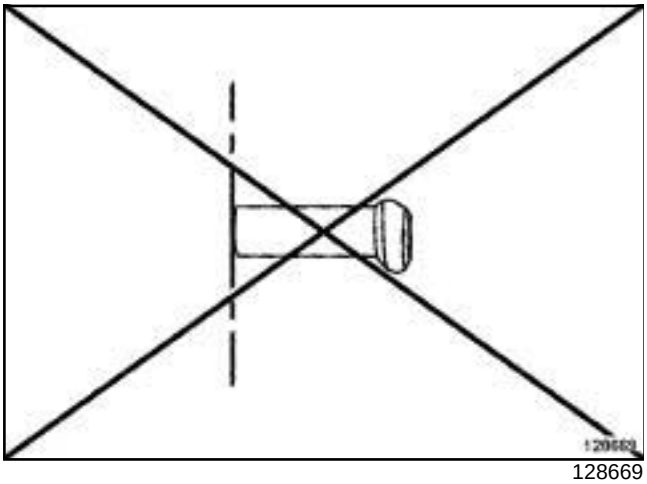

128669

- ❑ Visually inspect:
  - the uniformity of the rivets' diameter,
  - the rivet centring in relation to the pipe shaft.

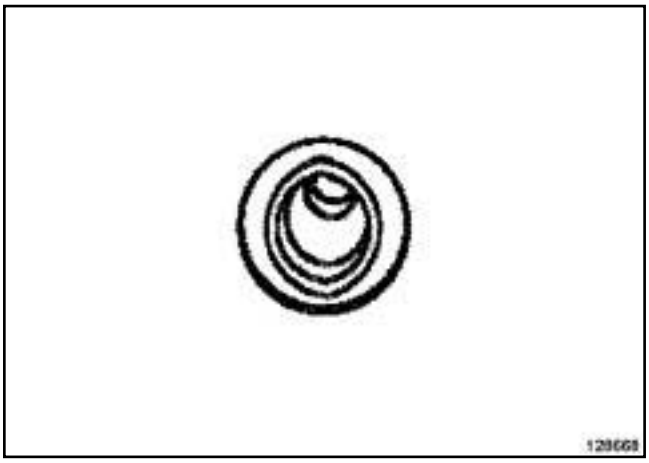

128668

- ❑ Visually check that the internal diameter of the pipe is not oval-shaped.

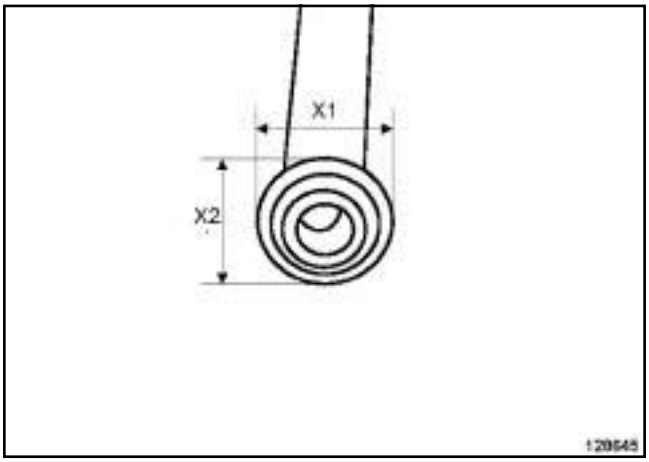

128645

- ❑ Check that the diameter of the end panel is not oval shaped using a sliding calliper.

  Correct diameter if (**X1**) = (**X2**)

IV - PREPARATION OF THE PIPE BEFORE BENDING

- ❑

> Note:
>
> Impurities may spread inside the pipe while the rivets are being made.

- ❑ Blow inside the pipe in both directions using a **compressed air nozzle**.
- ❑ Put plugs on the bolts or nuts at the ends of the pipe.
- ❑ Put the original pipe on a flat base plate that is the length of the pipe.

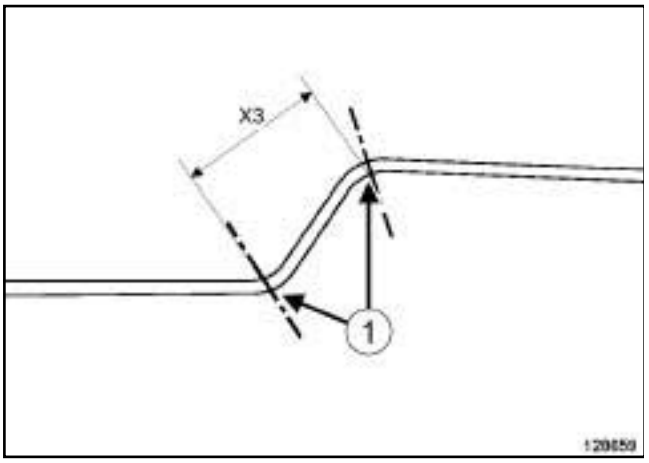

128659

❑ Measure the dimensions (**X3**) (in mm) curve after curve, between each curve radius « centre » (**1**) of the old pipe.

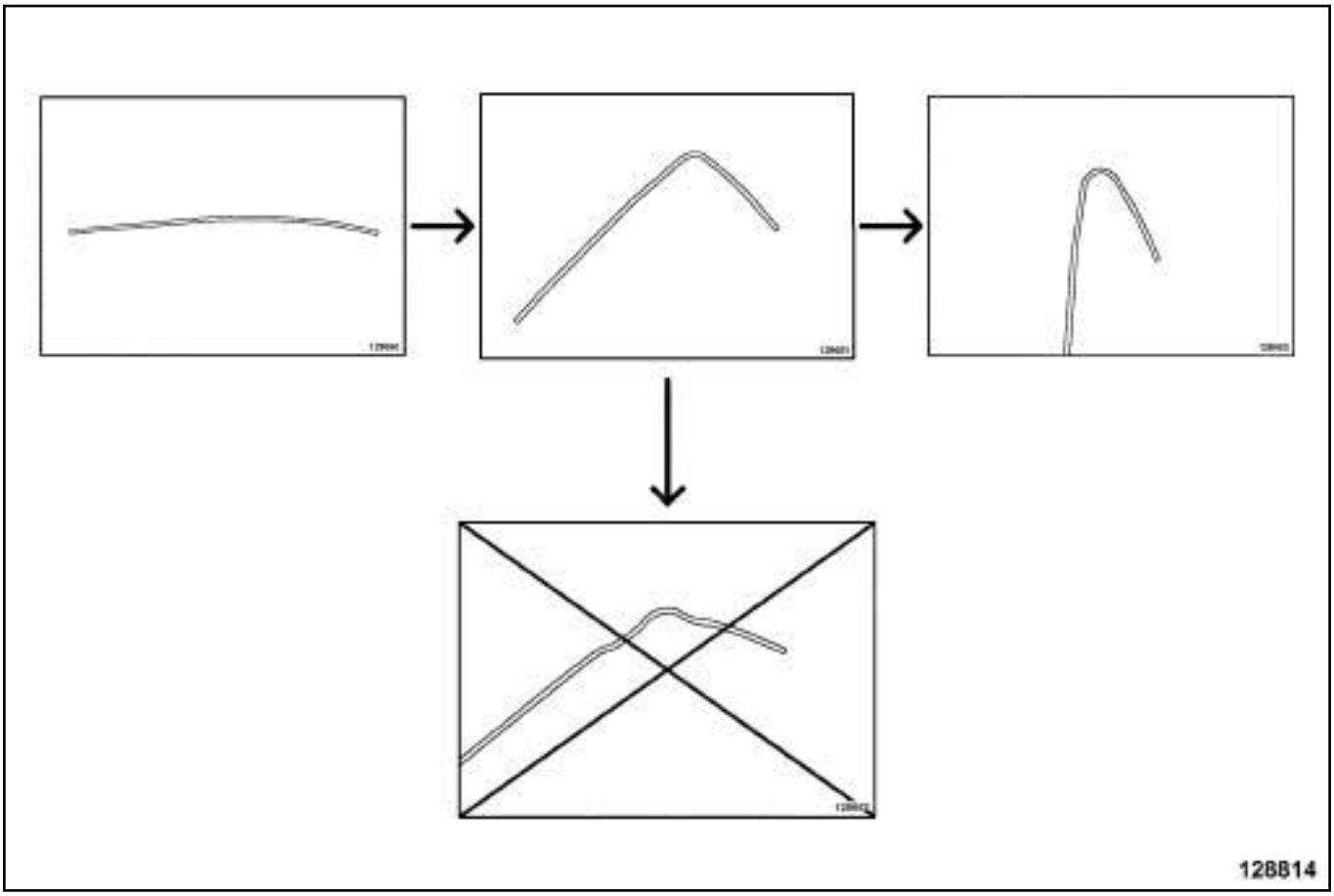

128814

❑

WARNING

To avoid weakening the pipe, either bend once or bend progressively by increasing the bend (that is, by continually decreasing the curve radius). Do not install a rigid pipe on a vehicle that may have been bended and then unbended alternatively to reach the correct curve radius.

Note:

During the bending operation, the required angle should be passed slightly in order to compensate for material elasticity.

❑ Shape the pipe using a bender, curve after curve, while respecting the original shape of the pipe.

V - CHECKING BENDING

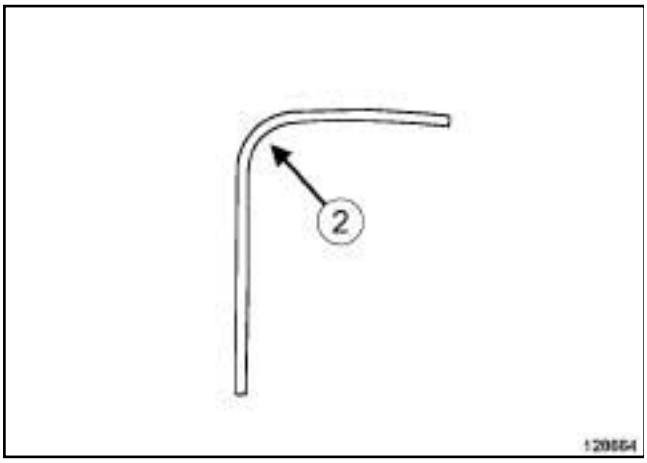

128664

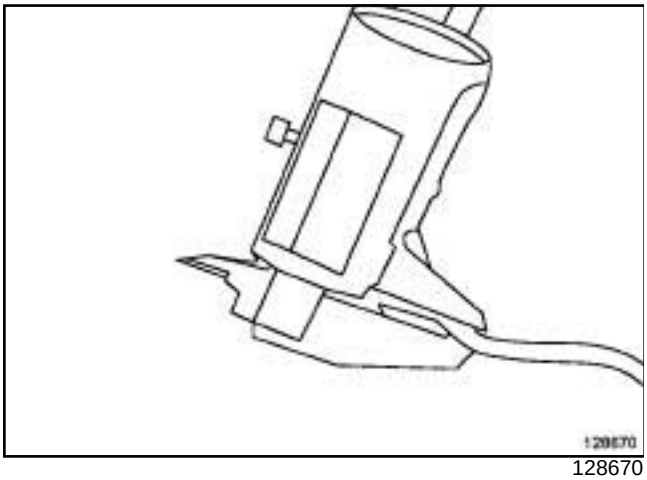

128670

❑ Check the out-of-roundness of the outer diameter at the centre of the curve radius (**2**) using a sliding calliper (the out-of-roundness of the outer diameter is correct if it is less than 10% flattening):

- nominal diameter of the pipe: **4.75 mm**,
- minimum diameter after bending: **4.30 mm**.

VI - REFITTING THE PIPE

❑

> Note:
>
> When refitting the rigid brake pipe:
>
> - respect the original routing as much as possible,
> - adjust the pipe routing by hand when fitting inside the clips.

> **WARNING**
>
> Contact points between the rigid brake pipe and the surrounding components could cause damage to the pipe. In order to avoid these contacts, adjust the pipe routing by hand.

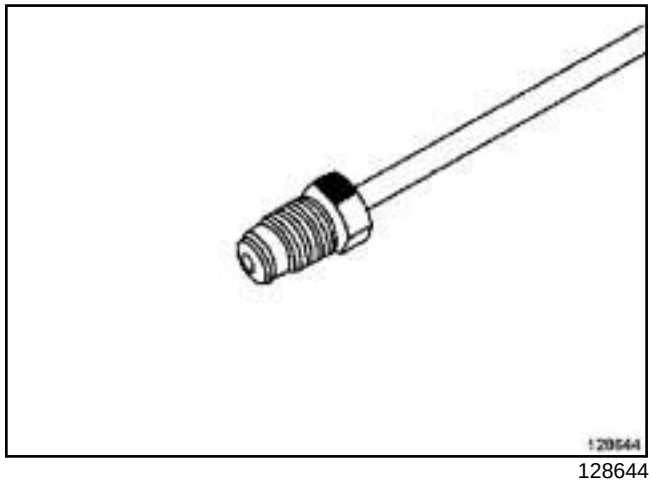

128644

❑ Torque tighten the **brake pipe bolts (8 N.m)**.

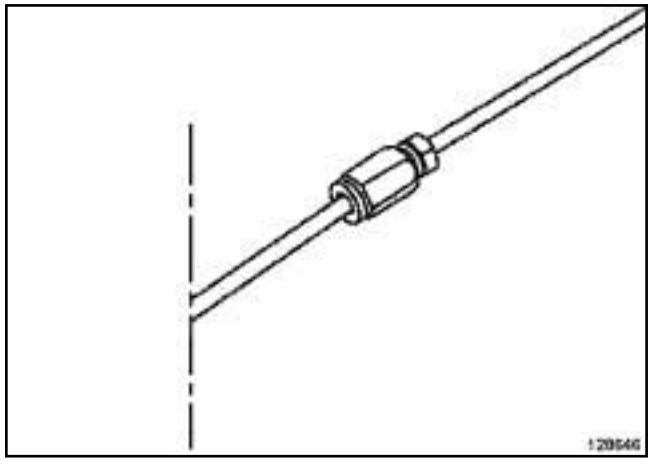

128646

❑ Torque tighten the **underbody unions (female/male) (6 N.m)**.

BRAKE FLUID REPLACEMENT INTERVAL

Our braking technology, and in particular the disc brakes (hollow pistons which conduct little heat, have a low volume of fluid in the cylinder, sliding callipers avoiding the need for a fluid reserve in the least cooled area of the wheel), has allowed us to prevent the risk of « vapour lock» as far as possible, even with heavy braking (mountainous area). However, current brake fluids are subject to minor deterioration during the first months of use due to slight humidity intake. This is why it is recommended that you change the brake fluid: see **maintenance booklet for the vehicle**.

1 - Topping up the level

Wear of the brake pads will result in a gradual drop in the fluid level in the reservoir.

Do not top up the fluid, as the level will rise again when the pads are next changed. The brake fluid level must not fall below the minimum mark.

2 - Approved brake fluid

Mixing two incompatible brake fluids in the brake circuit may lead to:

- serious risk of leakage due mainly to deterioration of the cups,
- deterioration in the operation of the ESP system.

To prevent such risks, it is essential to use only brake fluids that comply with the RENAULT standard (see **Vehicle: Parts and consumables for the repair**) .

Front brakes (mm)		
Piston diameter	54	
Disc diameter	280	269
Disc thickness	24	22
Minimum disc thickness (1)	21.8	19.8
Maximum disc run-out	0.07	
Brake lining thickness (including backplate)	17.8	17.4
Minimum brake lining thickness (including backplate)	7.5	8.1
Rear brakes (mm)		
Piston diameter	19	
Drum diameter	228.5	
Maximum drum wear diameter	229.5	
Thickness of primary brake lining	4.9	
Thickness of secondary brake lining	4.9	
Master cylinder (mm)		
Diameter	22.2	
Stroke	36	

(1) Brake discs cannot be reground. If they are too heavily worn or scratched they must be replaced.

Description	Tightening torque (N.m)
Steering column nut	**21**
Universal joint bolt	**21**
Track rod end nut	**37**
Axial ball joint	**34**

Description	Tightening torque (N.m)
Wheel alignment lock nut	**53**
Steering box bolt	**180**

Description	Tightening torque (N.m)
Pressure switch on high pressure pipe	**12**
High and low pressure pipe union on steering rack	**21**
High pressure pipe union on the steering pump	**21**
Low pressure pipe bolt on the sub-frame	**21**
Power assisted steering pump bolt on the support	**21**

- ❏ Lock the slip plates of the lift.
- ❏ Position the vehicle on a lift (see **Vehicle: Towing and lifting**) .
- ❏ Check the condition of the following components:
  - track rods,
  - axial ball joint linkages,
  - subframe,
  - lower arm rubber bushes,
  - lower arm ball joints (see **31A**, **Front axle components**, **Front driveshaft lower arm ball joint: Check**, page **31A-41**) ,
  - shock absorbers,
  - tyres,
- ❏ Check:
  - the tyre size (see **35A**, **Wheels and tyres**, **Tyres: Identification**, page **35A-8**) ,
  - the tyre inflation pressure (see **Tyre pressure: Identification**) .
- ❏ Put the vehicle in the VODM position (vehicle in running order) (see **Underbody heights: Adjustment value**) :
  - tank full,
  - vehicle empty (without luggage, etc.).
- ❏ Consult:
  - the front axle geometry values (see **Front axle assembly: Adjustment values**) ,
  - the rear axle geometry values (see **Rear axle assembly: Adjustment values**) .
- ❏ Refer to the user manual for the geometry tester.
- ❏ Check the geometry using the geometry tester.
- ❏ If there is an inconsistency between the manufacturer's values and the measured values:

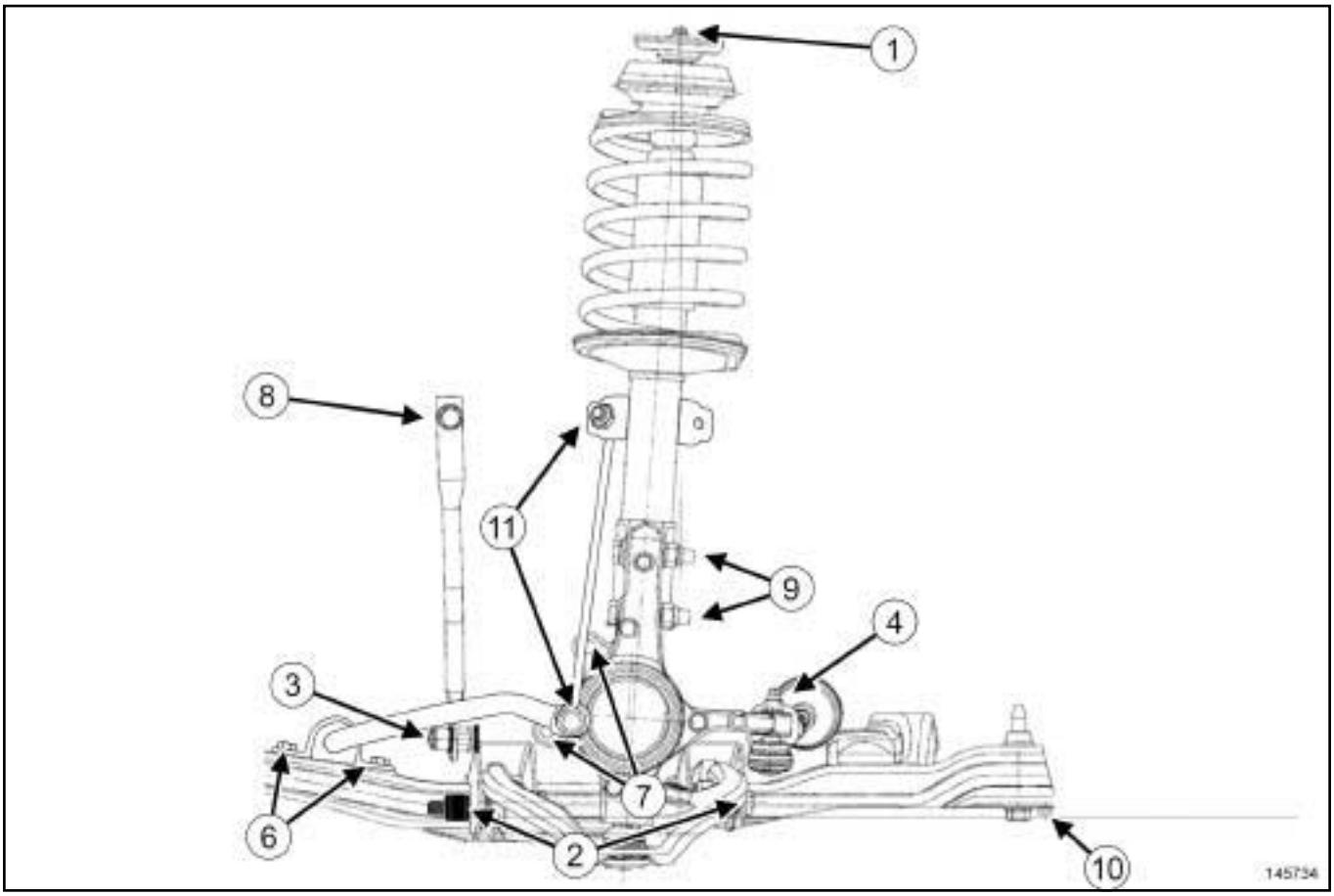

145734

No.	Description	Tightening torque (N.m
(**2**)	Lower arm bolt	**180**
(**3**)	Subframe tie-rod lower bolt	**21**
(**6**)	Anti-roll bar bearing bolt	**21**
(**7**)	Calliper support bolt	**107**
	Front sub-frame bolt	**110**
	Steering box bolt on the subframe	**180**
(**10**)	Front subframe bracket bolt	**44**

No.	Description	Tightening torque (N.m)
(**1**)	« Spring - shock absorber » assembly nut on the body	**44**
(**4**)	Track rod end nut	**37**
(**8**)	Subframe tie-rod upper bolt on the side member	**21**
(**9**)	Shock absorber bolt on the hub carrier	**105**

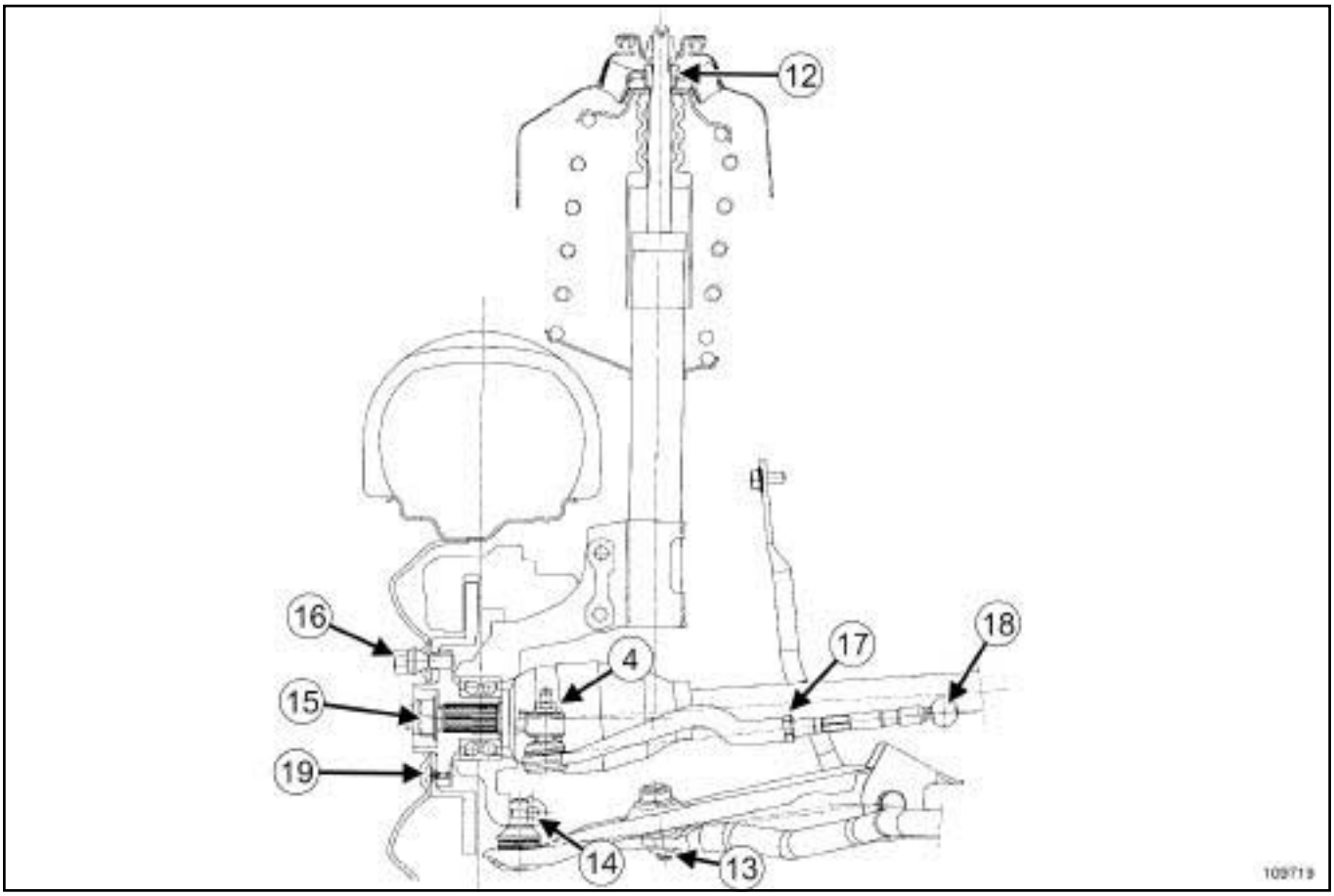

109719

No.	Description	Tightening torque (N.m)
(**12**)	Shock absorber nut for spring cup	**62**
(**14**)	Lower arm ball joint bolt or nut	**62**
(**15**)	Driveshaft nut	**280**
(**16**)	Wheel bolts	**105**
(**18**)	Axial ball joint mounting on the steering rack	**34**
(**19**)	Disc bolt	**14**

No.	Description	Tightening torque (N.m)
(**12**)	Anti-roll bar tie-rod nuts	**21**
(**17**)	Wheel alignment lock nut	**53**

Equipment required
flywheel immobiliser

Tightening torques ▽	
wheel alignment adjustment lock nuts	**53 N.m**

I - ADJUSTMENT PREPARATION STAGE

❑ Check the geometry (see **30A**, **General information**, **Axle assemblies: Check**, page **30A-15**) .

II - ADJUSTMENT OPERATION

1 - Wheel alignment

❑ Set the wheels straight ahead.

❑ Lock the steering wheel using a **flywheel immobiliser**.

❑ Adjust the wheel alignment by rotating the track rod sleeves.

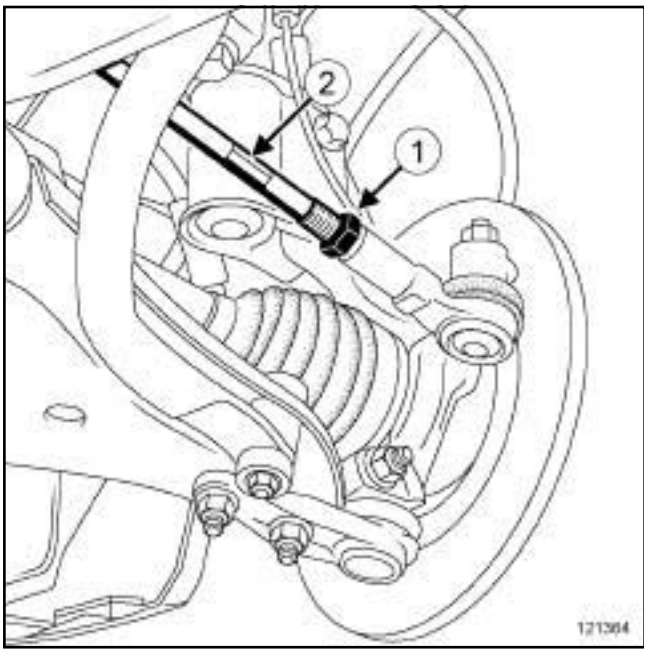

121364

❑ Loosen the wheel alignment adjustment lock nut (**1**) .

❑ Turn the track rod sleeve (**2**) to the required value.

❑ After adjustment, torque tighten the **wheel alignment adjustment lock nuts (53 N.m)**.

2 - Castor angle

❑ Not adjustable.

3 - Camber

❑ Not adjustable.

4 - Pivot

❑ Not adjustable.

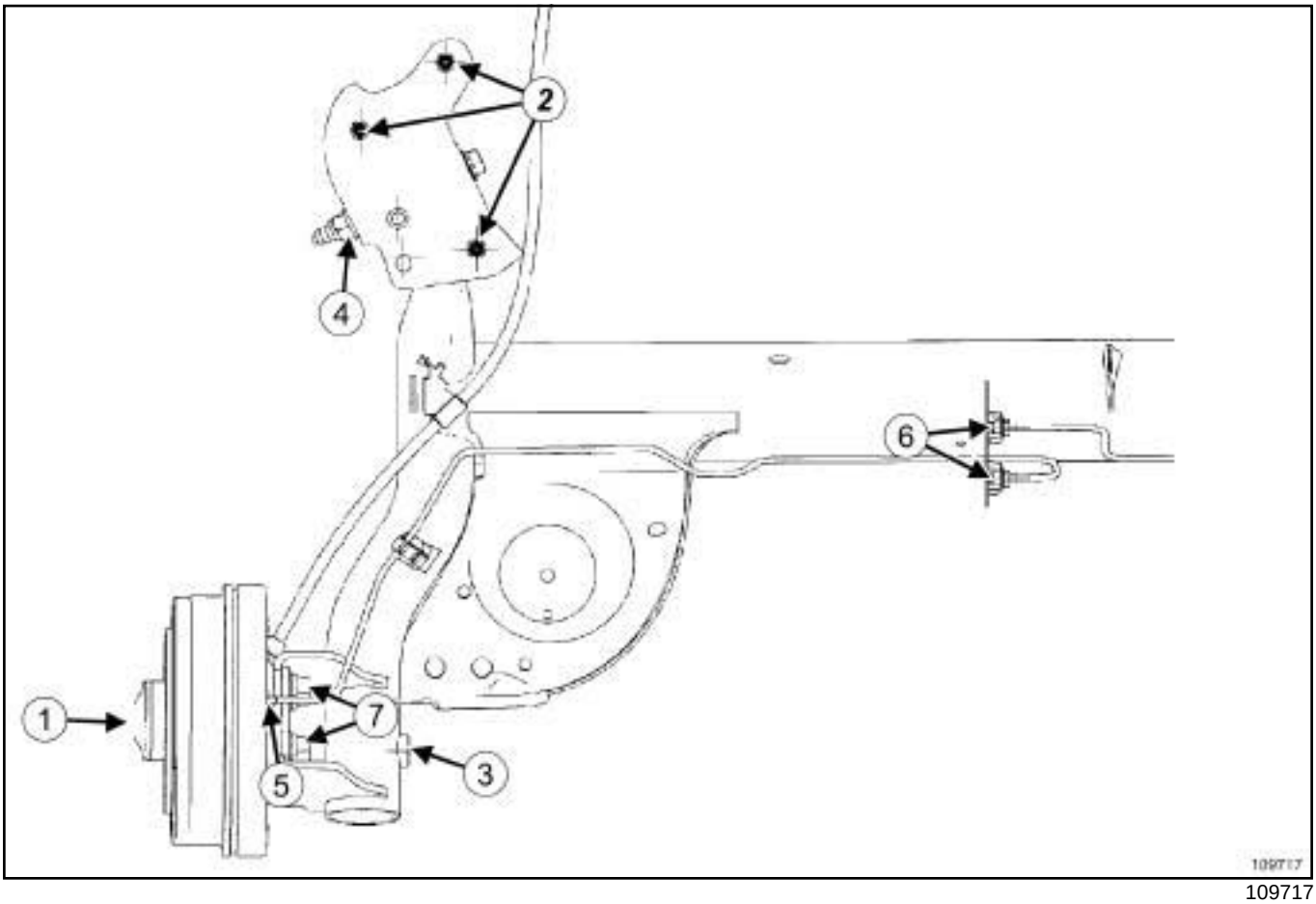

109717

No.	Description	Tightening torque (N.m)
(**4**)	Rubber bush nut	**125**
(**5**)	Rigid brake pipe on brake cylinder	**14**
(**6**)	Rigid pipe union on hose	**14**

No.	Description	Tightening torque (N.m)
(1)	Drum nut	**280**
(2)	Bearing bolt	**105**
(3)	Shock absorber lower bolt	**162**
(7)	Brake back-plate bolts on the rear axle	**105**
	Wheel speed sensor bolt	**6.5**

Front axle components: Precautions for the repair

I - SAFETY

1 - Advice to be followed before any operation

For an operation requiring the use of a lift, follow the safety advice (see **Vehicle: Towing and lifting**) (02A, Lifting equipment).

2 - Instructions to be followed during the operation

Do not press on the brake pedal during work on the brake system.

If, during work on the brake system, any damage on any part is observed, it must be repaired before driving the vehicle again.

Brake fluid is highly corrosive. Ensure any brake fluid spilt on parts of the vehicle is cleaned off.

In case of incorrect handling, the brake fluid can cause serious injury and damage. Follow the manufacturer's instructions for brake fluid.

II - CLEANLINESS

1 - Advice to be followed before any operation

Protect any bodywork components that risk being damaged by brake fluid with a cover.

2 - Instructions to be followed during the operation

Clean around the braking system with **BRAKE CLEANER** (see **Vehicle: Parts and consumables for the repair**) (04B, Consumables - Products).

WARNING

Prepare for the flow of fluid, and protect the surrounding components.

Do not allow friction materials to come into contact with grease, oil or other lubricants and cleaning products which are mineral oil based.

III - GENERAL RECOMMENDATIONS

1 - Bearing, hub carrier

WARNING

In order to prevent irreversible damage to the front hub bearing:

- Do not loosen or tighten the driveshaft nut when the wheels are on the ground.
- Do not place the vehicle with its wheels on the ground when the driveshaft has been loosened or removed.

WARNING

To ensure that the wheel speed sensor works properly, do not mark the sensor target on the bearing.

When removing a hub, it is essential to replace the bearing with a new one.

WARNING

Do not press the bearing's internal bush so as to avoid damaging the bearing (very high shrink-fitting force).

It is essential to check the condition of the hub and bearing surface and the hub carrier bore before refitting the bearing.

Use **SURFACE CLEANER** (see **Vehicle: Parts and consumables for the repair**) (04B, Consumables - Products) to clean:

- the new bearing's internal and external surfaces which are in contact with the hub carrier and the hub,
- the hub carrier surfaces in contact with the new bearing,
- the hub surfaces in contact with the new bearing.

Always check the surface condition of the hub carrier before refitting the "hub - bearing" assembly.

Clean the surfaces of the hub carrier that are in contact with the "hub - bearing" assembly using **SURFACE CLEANER** (see **Vehicle: Parts and consumables for the repair**) (04B, Consumables - Products)

Replace any component whose contact surfaces have deep scratches or cracks.

2 - Suspension spring

When replacing the spring, ensure that the positioning and orientation of the spring and the tool cups are correct.

When replacing a spring, always replace the spring on the opposite side.

If a shock absorber is replaced, the shock absorber on the opposite side must also be replaced.

Check that the spring compressor tool is operating correctly.

In the interests of safety, do not leave a spring compressed in the spring compressor tool.

During assembly and removing operations, the surface and the protection paint must not be damaged.

There must be no impacts during operations. Any handling hooks and tightening or positioning clamps should be equipped with rubber or plastic in order to avoid damage on the springs.

It is recommended to replace springs if:

- the paint is damaged,

- the spring has dents in it.

They are not usually symmetrical in shape and care should be taken to assemble them the right way round. This can be done using the coloured marking's position.

WARNING
To prevent the suspension spring from prematurely breaking, do not damage the anti-corrosion protection.

3 - Anti-roll bar

During assembly and removing operations, the surface and the protection paint must not be damaged.

There must be no impacts during operations. Any handling hooks, tightening or positioning clamps should be equipped with rubber or plastic parts so as to avoid damaging the anti roll bar.

It is recommended to replace the anti-roll bar if:

- the paint is damaged,

- the anti-roll bar has dents in it.

Note:

the most critical and sensitive zones are in the main elbows.

4 - Front axle

WARNING
To prevent any damage, do not use the lower arm as support for the lifting system.

Check the condition of all the gaiters before refitting. Always replace any damaged components with new ones.

Tightening torques ▽	
guide pin bolt	**34 N.m**

When replacing brake pads, be sure to replace the pads on the opposite side.

IMPORTANT

To avoid all risk of damage to the systems, apply the safety and cleanliness instructions and operation recommendations before carrying out any repair (see **31A**, **Front axle components**, **Front axle components: Precautions for the repair**, page **31A-1**) .

WARNING

In order not to damage the brake hose:

- do not tension the hose,
- do not twist the hose,
- check that there is no contact with the surrounding components.

REMOVAL

I - REMOVAL PREPARATION OPERATION

❑ Position the vehicle on a two-post lift (see **Vehicle: Towing and lifting**) (02A, Lifting equipment).

❑ Unlock the steering column.

❑ Remove the front wheels (see **35A**, **Wheels and tyres**, **Wheel: Removal - Refitting**, page **35A-1**) .

II - REMOVAL OPERATION

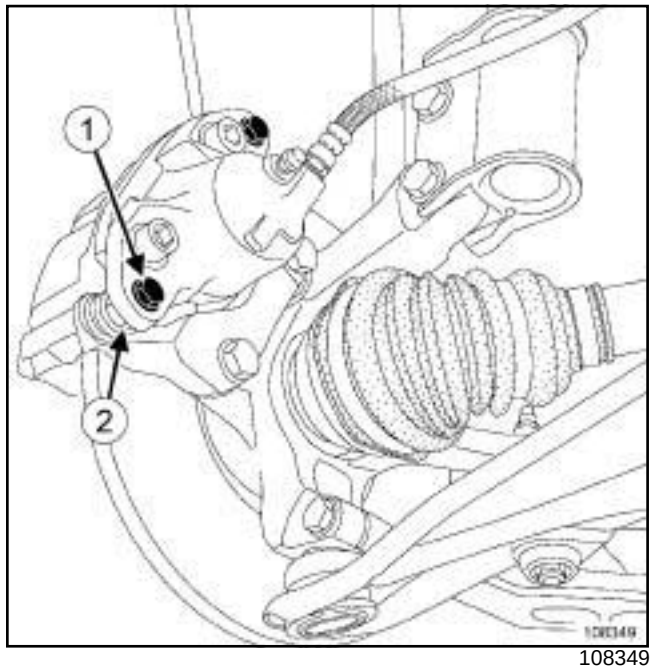

108349

❑ Remove the guide pin lower bolt (**1**) while holding the nut (**2**) .

❑ Pivot the front brake calliper upwards.

❑ Remove the front brake pads.

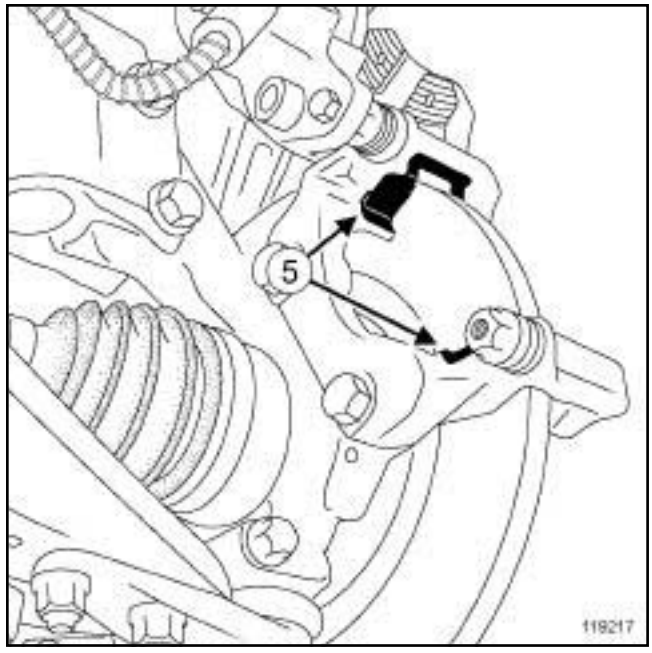

119217

❑ Remove the noise reducing fins (**5**) .

REFITTING

I - REFITTING PREPARATION OPERATION

❑ Check the thickness of the front brake pads (see **30A**, **General information**, **Brake: Specifications**, page **30A-13**) .

❑ Clean using a wire brush and **BRAKE CLEANER** (see **Vehicle: Parts and consumables for the repair**) (04B, Consumables - Products):

- the front brake calliper mountings,
- the front brake callipers,
- the brake discs.

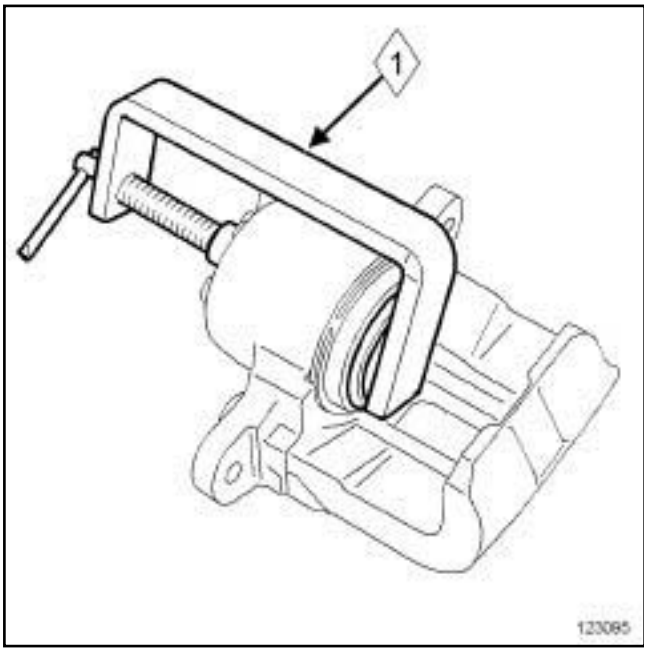

123095

❑ Push the piston (after coating it with grease from the repair kit) using the (**1**) until it is at the end of its bore.

❑ **parts always to be replaced: Front brake calliper guide pin bolt**.

❑ Always replace the noise-reducing fins.

II - REFITTING OPERATION

❑ Refit the noise-reducing fins.

❑ Install the brake pads starting from the inside.

❑ Tilt the calliper downwards to return it to its original position.

❑ Refit a new guide pin bolt.

❑ Torque tighten the **guide pin bolt (34 N.m)**.

III - FINAL OPERATION

❑ Refit the front wheels (see **35A**, **Wheels and tyres**, **Wheel: Removal - Refitting**, page **35A-1**) .

IMPORTANT

To avoid any accident, bring the pistons, brake pads and brake discs into contact by depressing the brake pad several times.

Equipment required
pedal press

IMPORTANT
Consult the safety and cleanliness advice and operation recommendations before carrying out any repair (see **31A**, **Front axle components**, **Front axle components: Precautions for the repair**, page **31A-1**) .

WARNING
Prepare for the flow of fluid, and protect the surrounding components.

REMOVAL

I - REMOVAL PREPARATION OPERATION

- ❑ Position the vehicle on a two-post lift (see **Vehicle: Towing and lifting**) .
- ❑ Set the wheels straight ahead.
- ❑ Position a **pedal press** on the brake pedal to limit the outflow of brake fluid.
- ❑ Remove the front wheel (see **35A**, **Wheels and tyres**, **Wheel: Removal - Refitting**, page **35A-1**) .

II - OPERATION FOR REMOVAL OF PART CONCERNED

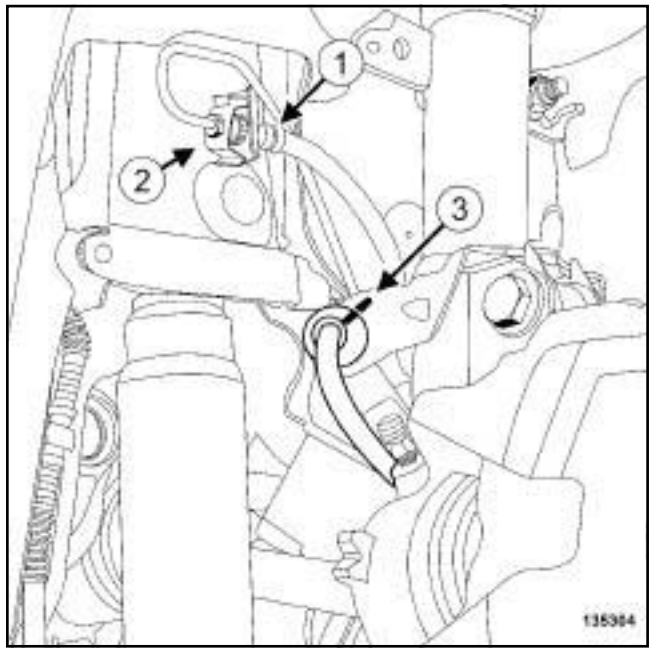

135304

- ❑ Loosen the hose union (**1**) on the rigid pipe union.
- ❑ Remove the retaining (**2**) fork from the hose.
- ❑ To avoid the premature damage of the brake hose by friction, observe the following procedure before unclipping the hose:
- ❑ Set the wheels straight ahead.
- ❑ Mark the position of the cap on the base of the shock absorber using a permanent marker.
- ❑ Unclip the brake hose cap (**3**) from the shock absorber base.
- ❑ Loosen the hose union on the brake calliper.
- ❑ Remove the brake hose.

REFITTING

I - REFITTING OPERATION FOR PART CONCERNED

❑

WARNING

In order not to damage the brake hose:

- do not tension the hose,
- do not twist the hose,
- check that there is no contact with the surrounding components.

- ❏ Set the wheels straight ahead.
- ❏ Refit the brake hose at the calliper end.
- ❏ Torque tighten the brake hose (see **30A**, **General information**, **Brake circuit: Tightening torque**, page **30A-6**)
- ❏ Clip the brake hose cap on to the base of the shock absorber, aligning the marks made using a permanent marker.
- ❏ Refit:
  - the brake hose on the rigid pipe union,
  - the hose retaining fork.
- ❏ Torque tighten the brake hose union on the rigid pipe union. (see **30A**, **General information**, **Brake circuit: Tightening torque**, page **30A-6**)

II - FINAL OPERATION

- ❏ Refit the front wheel (see **35A**, **Wheels and tyres**, **Wheel: Removal - Refitting**, page **35A-1**) .
- ❏ Remove the **pedal press** from the brake pedal.
- ❏ Bleed the brake circuit (see **30A**, **General information**, **Braking circuit: Bleed**, page **30A-4**) .

Equipment required
pedal press

Tightening torques ▽	
guide pin upper bolt	**34 N.m**
brake hose on the calliper	**17 N.m**

IMPORTANT
To avoid all risk of damage to the systems, apply the safety and cleanliness instructions and operation recommendations before carrying out any repair (see **31A**, **Front axle components**, **Front axle components: Precautions for the repair**, page **31A-1**) .

WARNING

In order not to damage the brake hose:

- do not tension the hose,
- do not twist the hose,
- check that there is no contact with the surrounding components.

WARNING
Prepare for the flow of fluid, and protect the surrounding components.

Note:

The callipers supplied as spare parts are pre-filled with brake fluid.

REMOVAL

I - REMOVAL PREPARATION OPERATION

❑ Position the vehicle on a two-post lift (see **Vehicle: Towing and lifting**) (02A, Lifting equipment).

❑ Fit the **pedal press** to the brake pedal to limit the outflow of brake fluid.

❑ Unlock the steering column.

❑ Remove the front wheel on the side concerned (see **35A**, **Wheels and tyres**, **Wheel: Removal - Refitting**, page **35A-1**) .

II - REMOVAL OPERATION

❑ Release the brake hose from the front brake calliper.

❑ Remove the brake pads (see **31A**, **Front axle components**, **Front brake pads: Removal - Refitting**, page **31A-3**) .

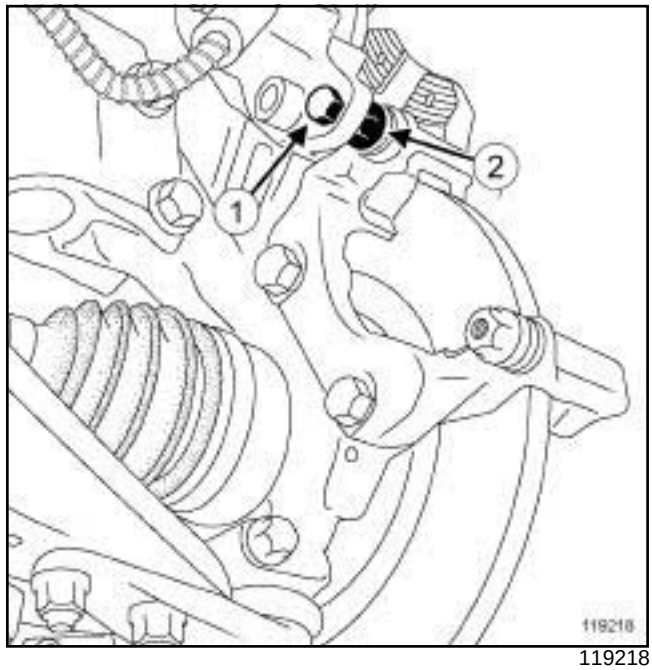

119218

❑ Remove the guide pin upper bolt (**1**) while holding the nut (**2**) .

❑ Remove:

- the front brake calliper from the hose,
- the front brake calliper.

REFITTING

I - REFITTING PREPARATION OPERATION

❑ Check the condition of the gaiter and the calliper piston.

❑ Replace any faulty parts (see **31A**, **Front axle components**, **Front brake calliper: Repair**, page **31A-9**) .

❑ Clean using a wire brush and **BRAKE CLEANER** (see **Vehicle: Parts and consumables for the repair**) (04B, Consumables - Products):

- the calliper supports,
- the callipers.

- Always replace the guide pin bolts each time they are removed.

II - REFITTING OPERATION

- Without using a tool, screw the calliper to the brake hose as tightly as possible.
- Refit the guide pin upper bolt.
- Torque tighten the **guide pin upper bolt (34 N.m)**.
- Refit the brake pads (see **31A**, **Front axle components**, **Front brake pads: Removal - Refitting**, page **31A-3**) .
- Torque tighten the **brake hose on the calliper (17 N.m)**.

III - FINAL OPERATION

- Remove the tool **pedal press**.
- Bleed the brake circuit (see **30A**, **General information**, **Braking circuit: Bleed**, page **30A-4**) .
- Refit the front wheel on the side concerned (see **35A**, **Wheels and tyres**, **Wheel: Removal - Refitting**, page **35A-1**) .

IMPORTANT

To avoid any accident, bring the pistons, brake pads and brake discs into contact by depressing the brake pad several times.

Equipment required
pedal press

IMPORTANT
Consult the safety and cleanliness advice and operation recommendations before carrying out any repair (see **31A**, **Front axle components**, **Front axle components: Precautions for the repair**, page **31A-1**) .

WARNING
Prepare for the flow of fluid, and protect the surrounding components.

REPAIR

I - REPAIR PREPARATION OPERATION

❑ Position the vehicle on a two-post lift (see **Vehicle: Towing and lifting**) (02A, Lifting equipment).

❑ Position the **pedal press** on the brake pedal to limit the outflow of brake fluid.

❑ Remove:

- the front wheel (see **35A**, **Wheels and tyres**, **Wheel: Removal - Refitting**, page **35A-1**) ,
- the front brake calliper (see **31A**, **Front axle components**, **Front brake calliper: Removal - Refitting**, page **31A-7**) .

II - REPAIR OPERATION FOR PART CONCERNED

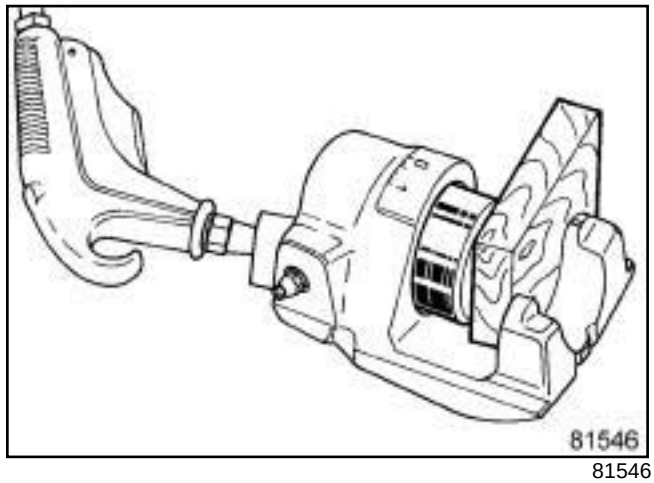

81546

❑ Remove the piston using compressed air, making sure to insert a wooden block between the calliper and the piston to avoid damaging it. Any trace of impact on the end panel will render the piston unfit for use.

❑ Remove the dust seal.

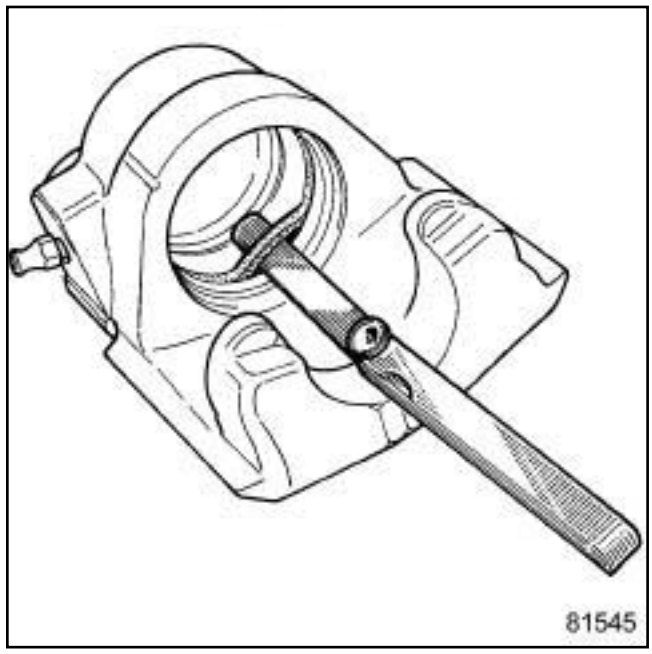

81545

❑ Remove the rectangular section seal from the calliper groove with a round edged spring blade (feeler gauge).

WARNING
The whole calliper must systematically be replaced if there are any scratches in the calliper bore.

❑ Clean the parts using methylated spirit.

REFITTING

I - REFITTING OPERATION FOR PART CONCERNED

❑ Refit:

- the new rectangular section seal in the calliper groove,
- the piston (after having smeared it with the grease supplied in the repair kit) using the,
- the dust seal.

II - FINAL OPERATION.

❑ Refit:

- the brake calliper (see **31A**, **Front axle components**, **Front brake calliper: Removal - Refitting**, page **31A-7**) ,
- the front wheel (see **35A**, **Wheels and tyres**, **Wheel: Removal - Refitting**, page **35A-1**) .

❑ Remove the **pedal press**.

> **IMPORTANT**
> To avoid any accident, bring the pistons, brake pads and brake discs into contact by depressing the brake pad several times.

❑ Bleed the brake circuit (see **30A**, **General information**, **Braking circuit: Bleed**, page **30A-4**) .

Tightening torques ▽	
front brake calliper support bolts	**105 N.m**
guide pin upper bolt	**34 N.m**

IMPORTANT

To avoid all risk of damage to the systems, apply the safety and cleanliness instructions and operation recommendations before carrying out any repair (see **31A**, **Front axle components**, **Front axle components: Precautions for the repair**, page **31A-1**) .

WARNING

In order not to damage the brake hose:

- do not tension the hose,
- do not twist the hose,
- check that there is no contact with the surrounding components.

REMOVAL

I - REMOVAL PREPARATION OPERATION

❏ Position the vehicle on a two-post lift (see **Vehicle: Towing and lifting**) (02A, Lifting equipment).

❏ Unlock the steering column.

❏ Remove:

- the front wheel on the side in question (see **35A**, **Wheels and tyres**, **Wheel: Removal - Refitting**, page **35A-1**) ,
- the front brake pads (see **31A**, **Front axle components**, **Front brake pads: Removal - Refitting**, page **31A-3**) .

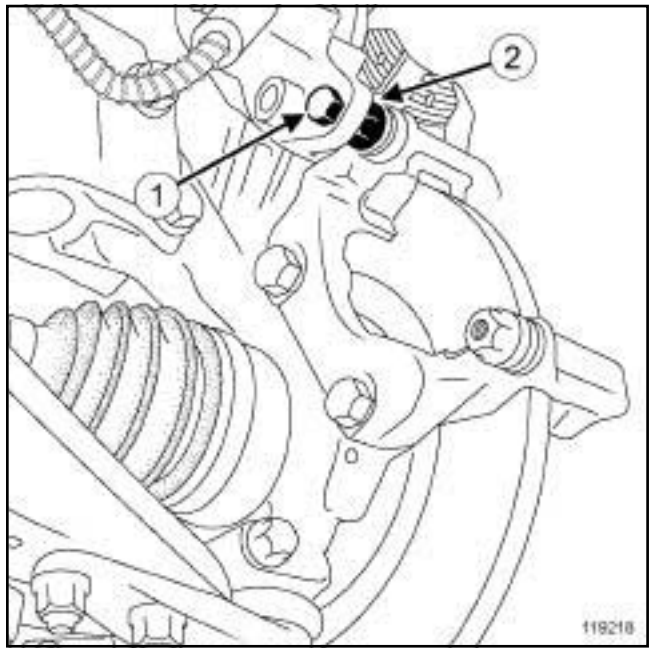

119218

❏ Remove the guide pin upper bolt (**1**) while holding the nut (**2**) .

❏ Suspend the front brake calliper from the suspension spring.

II - REMOVAL OPERATION

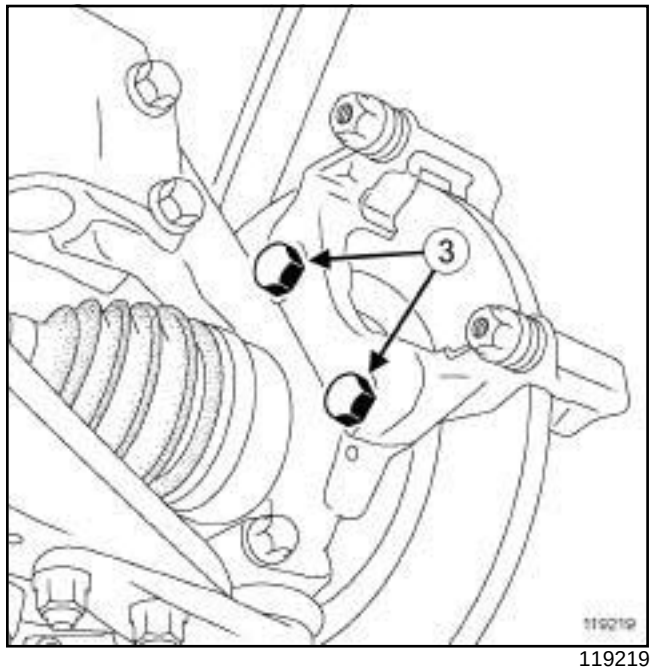

119219

❏ Remove:

- the two front brake calliper mounting bolts (**3**) ,
- the front brake calliper mounting.

REFITTING

I - REFITTING PREPARATION OPERATION

- Clean using a wire brush and **BRAKE CLEANER** (see **Vehicle: Parts and consumables for the repair**) (04B, Consumables - Products):
  - the front brake calliper mounting,
  - the front brake calliper,
  - the hub carrier.
- **parts always to be replaced: Front brake calliper mounting bolt**
- Coat the calliper mounting bolts with **HIGH STRENGTH THREAD LOCK** (see **Vehicle: Parts and consumables for the repair**) (04B, Consumables - Products) before fitting them.
- **parts always to be replaced: Front brake calliper guide pin bolt**.

II - REFITTING OPERATION

- Refit:
  - the front brake calliper mounting,
  - the front brake calliper mounting bolts.
- Torque tighten the **front brake calliper support bolts (105 N.m)**.

III - FINAL OPERATION

- Refit the guide pin upper bolt.
- Torque tighten the **guide pin upper bolt (34 N.m)**.
- Refit:
  - the front brake pads (see **31A**, **Front axle components**, **Front brake pads: Removal - Refitting**, page **31A-3**) .
  - the front wheel on the side concerned (see **35A**, **Wheels and tyres**, **Wheel: Removal - Refitting**, page **35A-1**)

IMPORTANT
To avoid any accident, bring the pistons, brake pads and brake discs into contact by depressing the brake pad several times.

WHEEL DISC PROTECTOR

Tightening torques ▽	
bolts of the front brake disc protector	**7 N.m**

IMPORTANT
To avoid all risk of damage to the systems, apply the safety and cleanliness instructions and operation recommendations before carrying out any repair (see **31A**, **Front axle components**, **Front axle components: Precautions for the repair**, page **31A-1**) .

REMOVAL

I - REMOVAL PREPARATION OPERATION

❏ Position the vehicle on a two-post lift (see **Vehicle: Towing and lifting**) (02A, Lifting equipment).

❏ Remove:

- the front wheel (see **35A**, **Wheels and tyres**, **Wheel: Removal - Refitting**, page **35A-1**) ,
- the front brake pads (see **31A**, **Front axle components**, **Front brake pads: Removal - Refitting**, page **31A-3**) ,
- the front brake disc (see **31A**, **Front axle components**, **Front brake disc: Removal - Refitting**, page **31A-15**) .

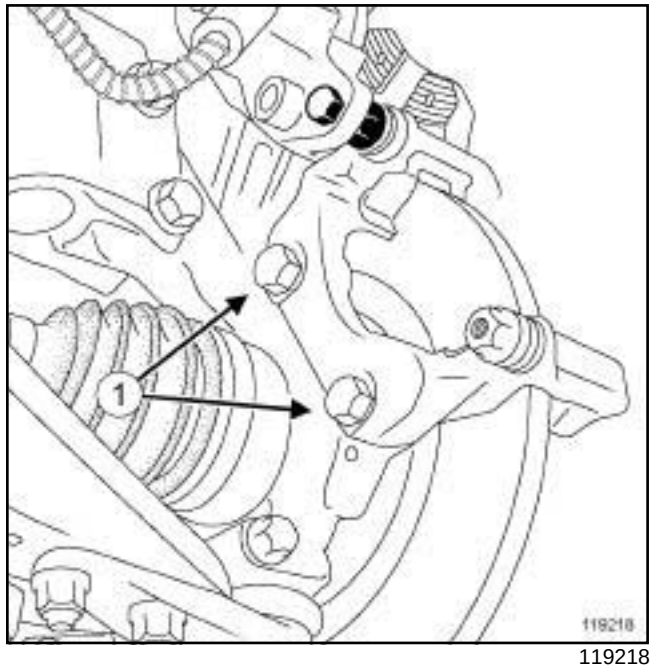

119218

❏ Remove the calliper mounting bolts (**1**) .

❏ Attach the « calliper mounting - brake calliper » assembly to the suspension spring.

II - REMOVAL OPERATION

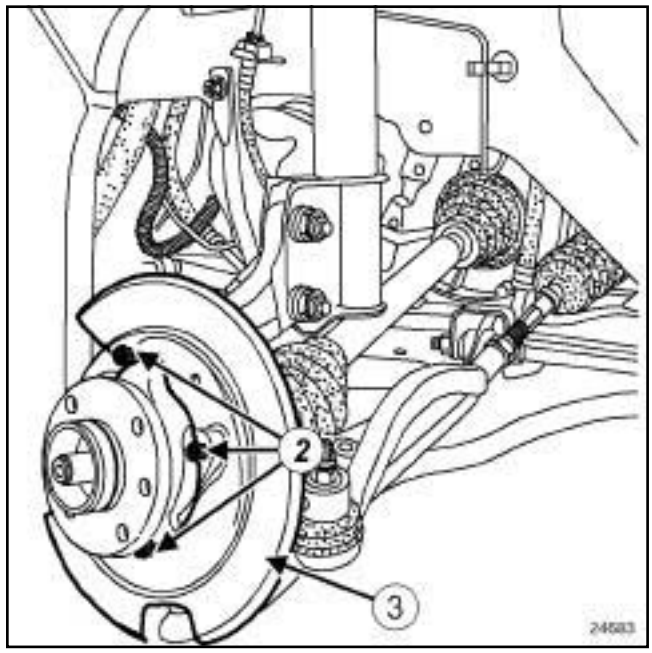

24683

❏ Remove:

- the front brake disc protector bolts (**2**) ,
- the front brake disc protector (**3**) .

WHEEL DISC PROTECTOR

REFITTING

I - REFITTING PREPARATION OPERATION

❑ Using a wire brush and **SURFACE CLEANER** (see **Vehicle: Parts and consumables for the repair**) (04B, Consumables - Products) clean the hub carrier.

II - REFITTING OPERATION

❑ Refit the brake disc protector.

❑ Torque tighten the **bolts of the front brake disc protector (7 N.m)**.

III - FINAL OPERATION

❑ Refit:

- the front brake disc (see **31A**, **Front axle components**, **Front brake disc: Removal - Refitting**, page **31A-15**) ,
- the « calliper mounting - brake calliper » assembly (see **31A**, **Front axle components**, **Front brake calliper mounting: Removal - Refitting**, page **31A-11**) ,
- the front brake pads (see **31A**, **Front axle components**, **Front brake pads: Removal - Refitting**, page **31A-3**) ,
- the front wheel (see **35A**, **Wheels and tyres**, **Wheel: Removal - Refitting**, page **35A-1**) .

IMPORTANT

To avoid any accident, bring the pistons, brake pads and brake discs into contact by depressing the brake pad several times.

Equipment required
indelible pencil
parts washer

Brake discs cannot be reground. If there is excessive scoring or wear, they will need to be replaced (see **30A**, **General information**, **Brake: Specifications**, page **30A-13**) .

IMPORTANT

To avoid all risk of damage to the systems, apply the safety and cleanliness instructions and operation recommendations before carrying out any repair:

- (see **30A**, **General information**, **Brake circuit: Precautions for the repair**, page **30A-2**) (30A, General infomation),
- (see **Vehicle: Precautions for the repair**) (01D, Mechanical introduction).

REMOVAL

I - REMOVAL PREPARATION OPERATION

❏ Position the vehicle on a two-post lift (see **Vehicle: Towing and lifting**) (02A, Lifting equipment).

❏ Set the wheels straight ahead.

❏ Remove the front wheel (see **35A**, **Wheels and tyres**, **Wheel: Removal - Refitting**, page **35A-1**) .

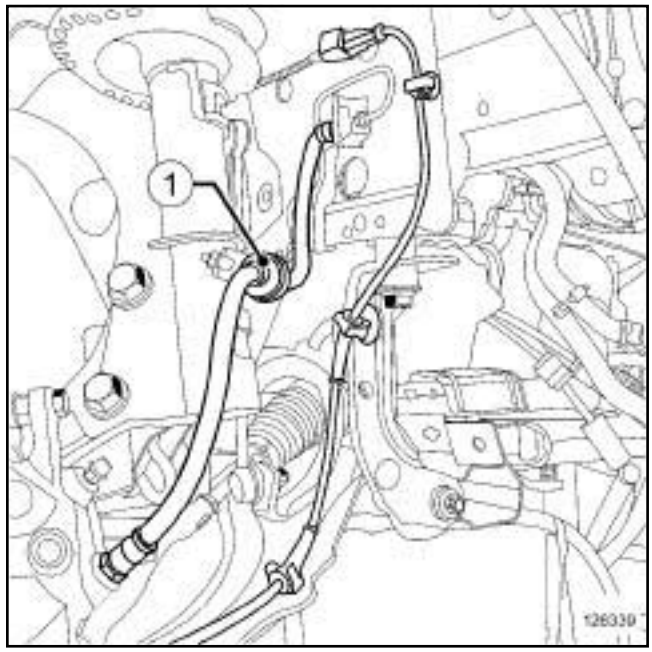

126339

❏ Mark the position of the cap (**1**) on the base of the shock absorber using a **indelible pencil**.

❏ Unclip the cap (**1**) from the base of the shock absorber.

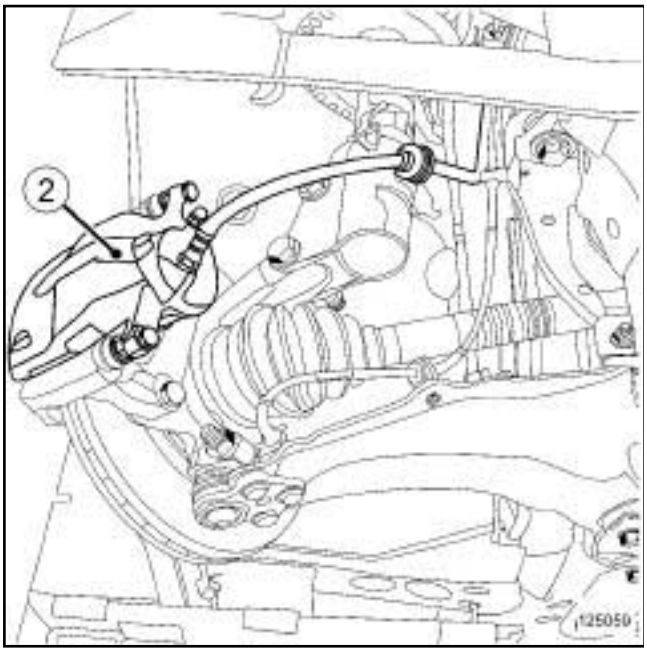

125059

- ❑ Remove the brake pads (see **31A**, **Front axle components**, **Front brake pads: Removal - Refitting**, page **31A-3**)
- ❑ Remove the "brake calliper mounting - brake calliper" assembly (**2**) (see **31A**, **Front axle components**, **Front brake calliper mounting: Removal - Refitting**, page **31A-11**) .
- ❑ Hang the "brake calliper mounting - brake calliper" assembly (**2**) on the suspension spring.

II - OPERATION FOR REMOVAL OF PART CONCERNED

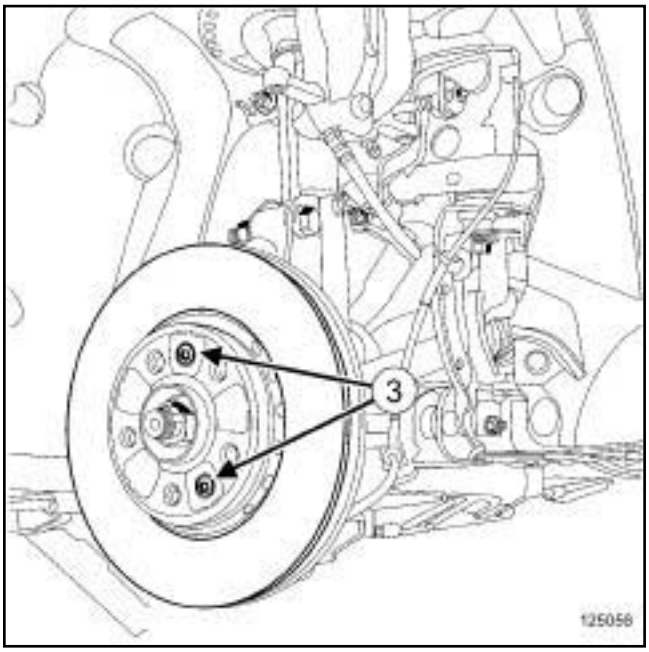

125056

- ❑ Remove:

  - the brake disc bolt or bolts (**3**) ,

  - the brake disc.

REFITTING

I - REFITTING PREPARATION OPERATION

- ❑ Clean the brake discs using a **parts washer**.
- ❑ Dry the surface of the discs.
- ❑ Clean the mating faces of the disc on the hub using a wire brush and **BRAKE CLEANER** (see **Vehicle: Parts and consumables for the repair**) (04B, Consumables - Products).
- ❑ **parts always to be replaced: Front brake disc bolt**

II - REFITTING OPERATION FOR PART CONCERNED

- ❑ Refit the brake disc with new bolts.
- ❑ Torque tighten the new disc mounting bolts (see **30A**, **General information**, **Brake circuit: Tightening torque**, page **30A-6**)

III - FINAL OPERATION

- ❑ Refit the "brake calliper mounting - brake calliper" assembly (see **31A**, **Front axle components**, **Front brake calliper mounting: Removal - Refitting**, page **31A-11**) .
- ❑ Refit the brake pads (see **31A**, **Front axle components**, **Front brake pads: Removal - Refitting**, page **31A-3**)
- ❑ Set the wheels straight ahead.
- ❑ Clip the cap on the base of the shock absorber while aligning the marks made with a **indelible pencil**.

WARNING

In order not to damage the brake hose:

- do not tension the hose,
- do not twist the hose,
- check that there is no contact with the surrounding components.

- ❑ Refit the front wheel (see **35A**, **Wheels and tyres**, **Wheel: Removal - Refitting**, page **35A-1**) .

IMPORTANT

To avoid any accident, bring the pistons, brake pads and brake discs into contact by depressing the brake pad several times.

- ❑ Advise the customer to run-in the brake pads (no harsh braking).

I - PREPARATION OPERATION FOR CHECK

Position the vehicle on a two-post lift (see **Vehicle: Towing and lifting**) (02A, Lifting equipment).

Remove the wheel (see **35A**, **Wheels and tyres**, **Wheel: Removal - Refitting**, page **35A-1**) .

II - CHECKING OPERATION FOR PART CONCERNED

Note:

Use a Palmer type tool to check the thickness of the disc.

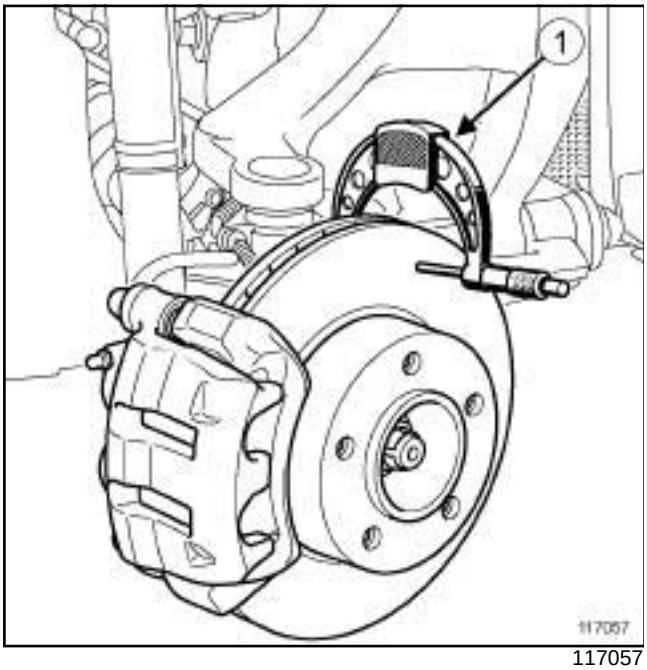

117057

Position the Palmer tool (**1**) to measure the disc thickness.

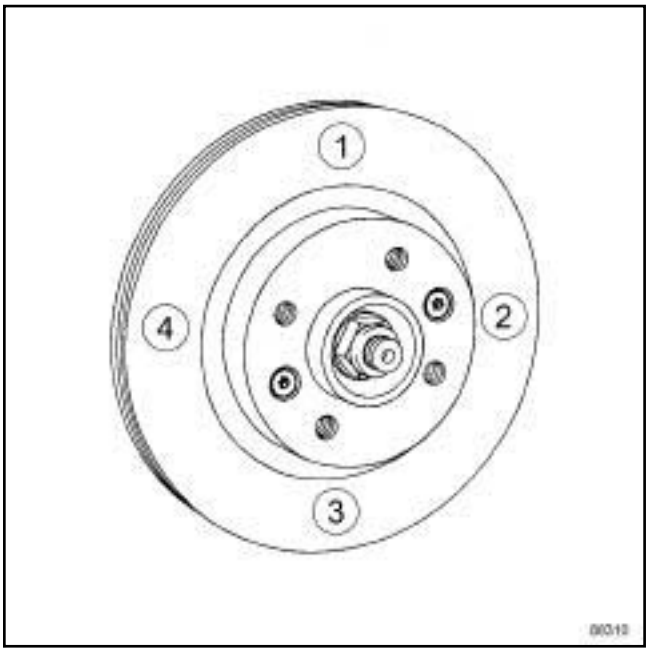

88310

Measure the thickness of the disc at 4 points in order (90˚ apart).

Compare the values with those recommended by the manufacturer (see **30A**, **General information**, **Brake: Specifications**, page **30A-13**) .

III - FINAL OPERATION

Replace the discs if necessary (see **31A**, **Front axle components**, **Front brake disc: Removal - Refitting**, page **31A-15**) .

Refit the wheel (see **35A**, **Wheels and tyres**, **Wheel: Removal - Refitting**, page **35A-1**) .

ANTI-LOCK BRAKING SYSTEM

Equipment required
pedal press

Tightening torques ▽	
brake pipe unions on the hydraulic unit	**14 N.m**
brake pipe unions on the master cylinder	**14 N.m**

IMPORTANT
To avoid all risk of damage to the systems, apply the safety and cleanliness instructions and operation recommendations before carrying out any repair (see **31A**, **Front axle components**, **Front axle components: Precautions for the repair**, page **31A-1**) .

WARNING
Prepare for the flow of fluid, and protect the surrounding components.

REMOVAL

I - REMOVAL PREPARATION OPERATION

❑ Position the vehicle on a two-post lift (see **Vehicle: Towing and lifting**) (02A, Lifting equipment).

❑ Position a **pedal press** on the brake pedal to limit the outflow of brake fluid.

❑ Remove the front engine cover (if fitted to the vehicle).

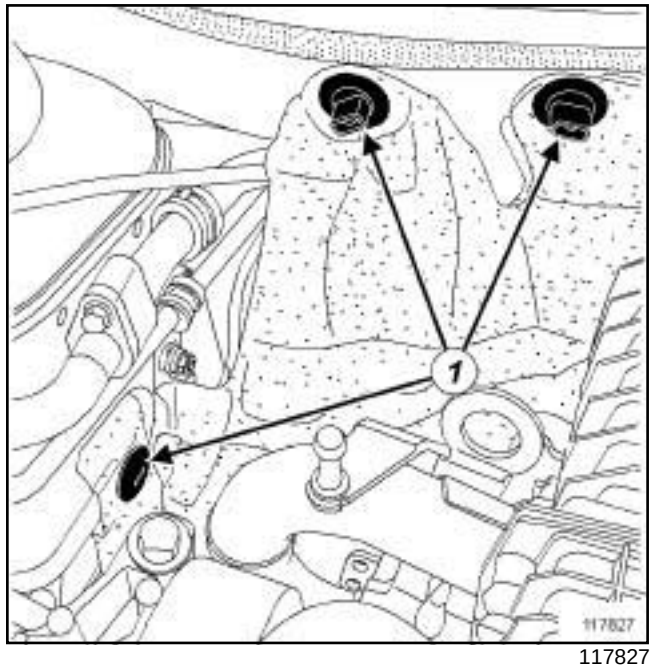

117827

❑ Remove the soundproofing clips (**1**) (if fitted to the vehicle).

❑ Move the soundproofing to one side in order to see the pipes.

II - REMOVAL OPERATION

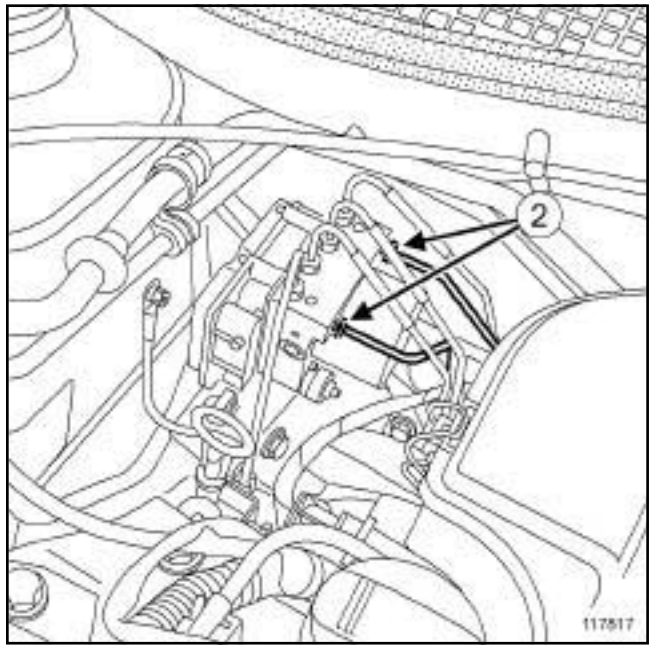

117817

❑ Undo the brake pipe unions (**2**) on the hydraulic unit.

❑ Detach the brake pipes.

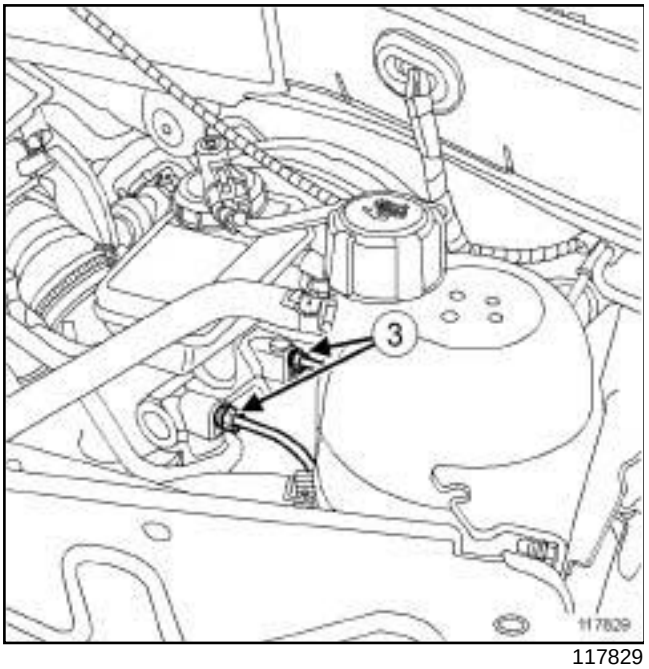

117829

- ❑ Undo the brake pipe unions (**3**) on the master cylinder.
- ❑ Remove the brake pipes between the hydraulic unit and master cylinder.

REFITTING

I - REFITTING OPERATION

- ❑ Refit the brake pipes between the hydraulic unit and master cylinder.
- ❑ Clip the brake pipes onto the bulkhead.
- ❑ Screw on:
  - the brake pipe unions on the hydraulic unit,
  - the brake pipe unions on the master cylinder.
- ❑ Torque tighten:
  - the **brake pipe unions on the hydraulic unit (14 N.m)**,
  - the **brake pipe unions on the master cylinder (14 N.m)**.

II - FINAL OPERATION

- ❑ Refit:
  - the soundproofing on the bulkhead (if fitted to the vehicle),
  - the soundproofing mounting clips,
  - the front engine cover (if fitted to the vehicle).
- ❑ Remove the **pedal press**.
- ❑ Bleed the brake circuit (see **30A**, **General information**, **Braking circuit: Bleed**, page **30A-4**) .

ANTI-LOCK BRAKING SYSTEM

Equipment required
pedal press

Tightening torques ▽	
brake pipe unions on the hydraulic unit	**14 N.m**
brake pipe unions on the underbody unions	**14 N.m**

IMPORTANT
To avoid all risk of damage to the systems, apply the safety and cleanliness instructions and operation recommendations before carrying out any repair (see **31A**, **Front axle components**, **Front axle components: Precautions for the repair**, page **31A-1**) .

WARNING
Prepare for the flow of fluid, and protect the surrounding components.

REMOVAL

I - REMOVAL PREPARATION OPERATION

❑ Position the vehicle on a two-post lift (see **Vehicle: Towing and lifting**) (02A, Lifting equipment).

❑ Position a **pedal press** on the brake pedal to limit the outflow of brake fluid.

❑ Remove the front engine cover (if fitted to the vehicle).

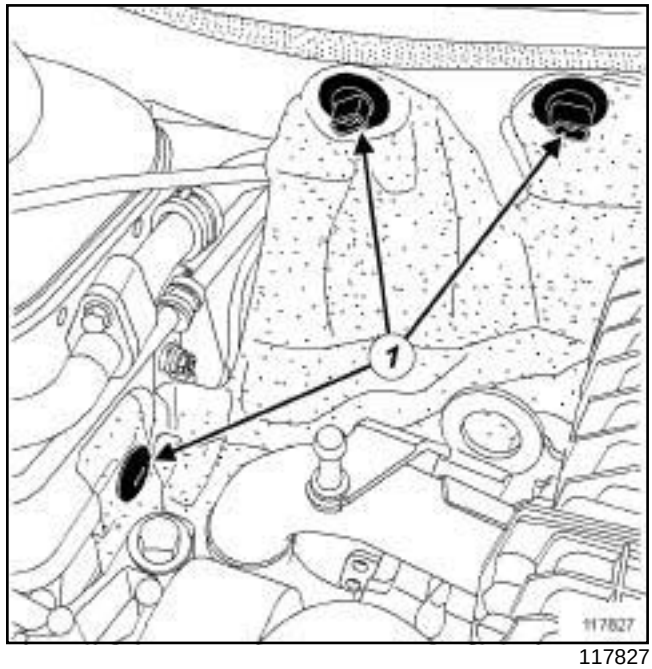

117827

❑ Remove the soundproofing clips (**1**) (if fitted to the vehicle).

❑ Move the soundproofing to one side in order to see the pipes.

II - REMOVAL OPERATION

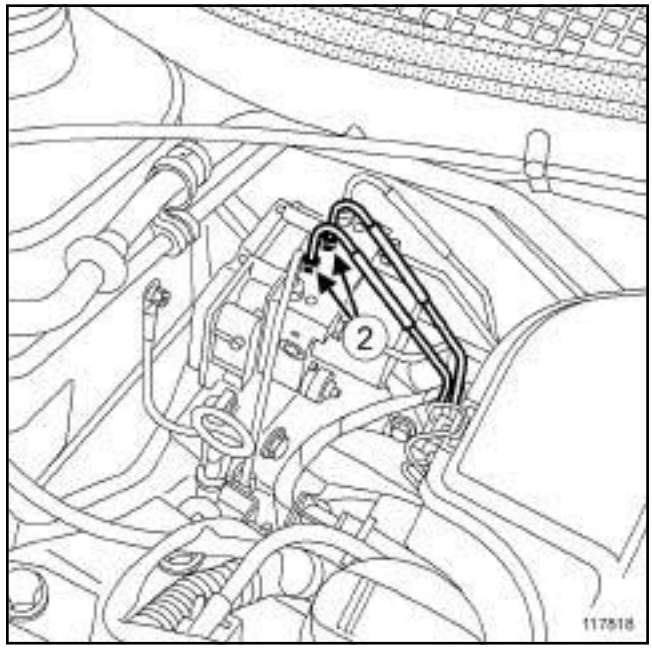

117818

❑ Unscrew the brake pipe unions (**2**) on the hydraulic unit.

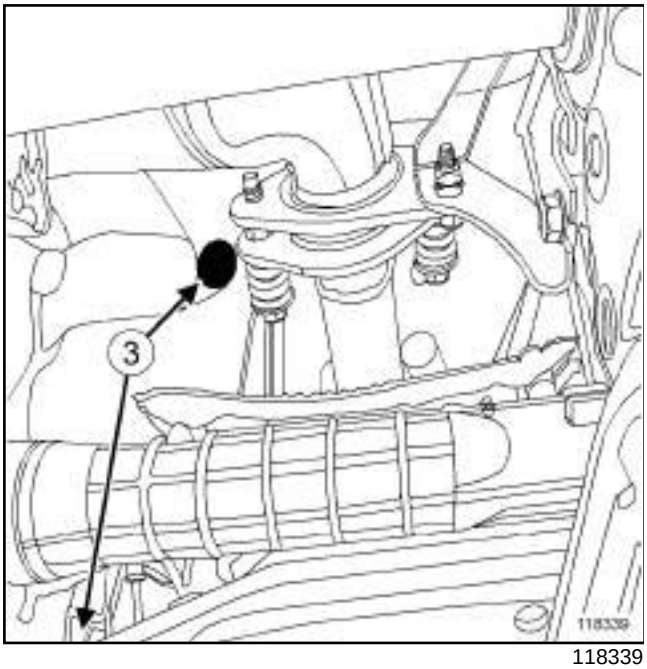

118339

❑ Remove the two bulkhead soundproofing clips (**3**) .

❑ Move aside the soundproofing to reveal the underbody pipe unions.

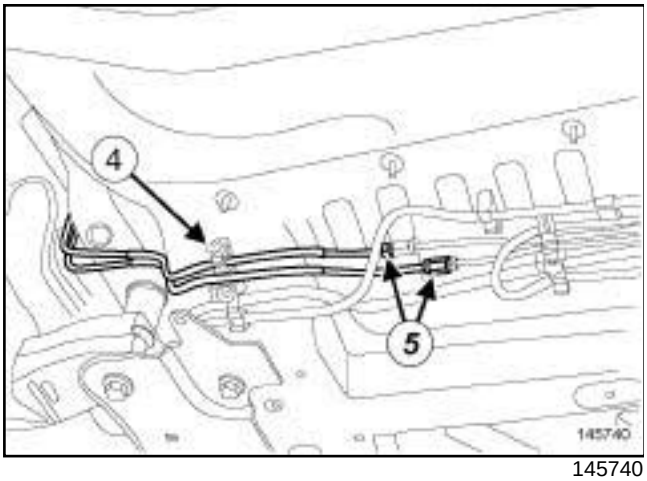

145740

❑ Detach the brake pipes from their clips (**4**) .

❑ Unscrew the pipe unions (**5**) on the hydraulic unit.

❑ Remove the brake pipes between the hydraulic unit and underbody unions.

REFITTING

I - REFITTING OPERATION

❑ Refit the brake pipes between the hydraulic unit and underbody unions.

❑ Screw on:

- the brake pipe unions on the hydraulic unit,
- the brake pipe unions on the underbody unions.

❑ Torque tighten:

- the **brake pipe unions on the hydraulic unit (14 N.m)**,
- the **brake pipe unions on the underbody unions (14 N.m)**.

II - FINAL OPERATION

❑ Fit the bulkhead soundproofing.

❑ Refit:

- the soundproofing mounting clips (if fitted to the vehicle),
- the front engine cover (if fitted to the vehicle).

❑ Remove the **pedal press**.

❑ Bleed the brake circuit (see **30A**, **General information**, **Braking circuit: Bleed**, page **30A-4**) .

ANTI-LOCK BRAKING SYSTEM

Equipment required
pedal press

Tightening torques ▽	
brake pipe union on the hydraulic unit	**14 N.m**
brake pipe union on the brake hose	**14 N.m**

IMPORTANT
To avoid all risk of damage to the systems, apply the safety and cleanliness instructions and operation recommendations before carrying out any repair (see **31A**, **Front axle components**, **Front axle components: Precautions for the repair**, page **31A-1**) .

WARNING
Prepare for the flow of fluid, and protect the surrounding components.

REMOVAL

I - REMOVAL PREPARATION OPERATION

❑ Position the vehicle on a two-post lift (see **Vehicle: Towing and lifting**) (02A, Lifting equipment).

❑ Position a **pedal press** on the brake pedal to limit the outflow of brake fluid.

❑ Remove:

- the front left-hand wheel (see **35A**, **Wheels and tyres**, **Wheel: Removal - Refitting**, page **35A-1**) ,
- the front engine cover (if fitted to the vehicle).

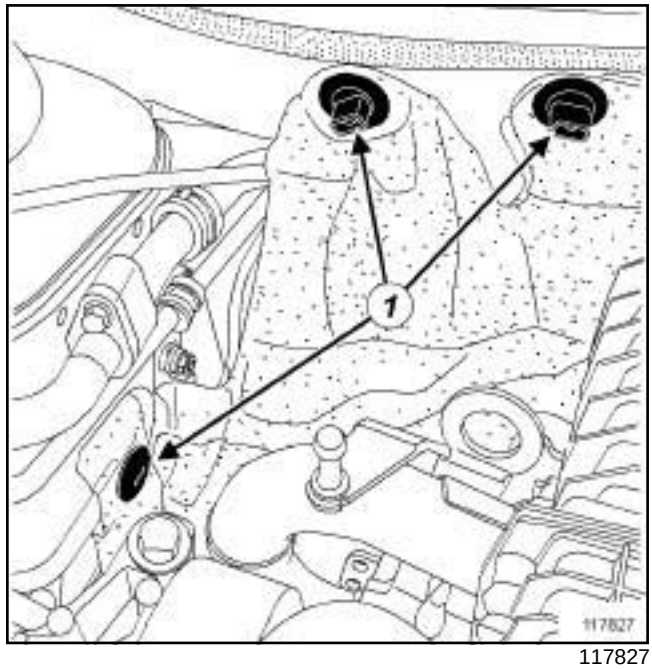

117827

❑ Remove the soundproofing clips (**1**) (if fitted to the vehicle).

❑ Move the soundproofing to one side in order to see the pipes.

II - REMOVAL OPERATION

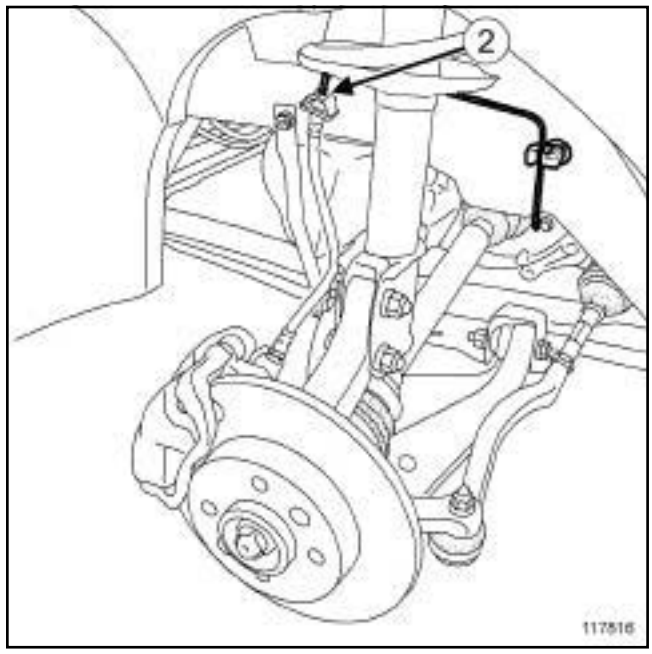

117816

❑ Undo the brake pipe union (**2**) on the brake hose.

❑ Remove the brake pipe from the retaining bracket.

❑ Detach the brake pipe.

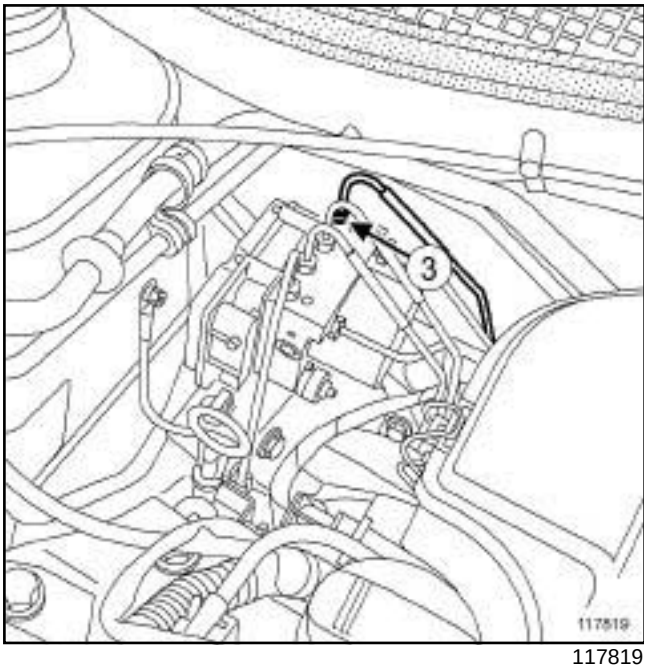

117819

- ❑ Undo the brake pipe union (**3**) on the hydraulic unit.
- ❑ Remove the brake pipes between the hydraulic unit and front left-hand brake hose.

REFITTING

I - REFITTING OPERATION

- ❑ Refit the brake pipe between the hydraulic unit and front left-hand brake hose.
- ❑ Attach the brake pipe.
- ❑ Refit:
  - the brake pipe union on the front left-hand brake hose,
  - the brake pipe union on the hydraulic unit.
- ❑ Torque tighten:
  - the **brake pipe union on the hydraulic unit (14 N.m)**,
  - the **brake pipe union on the brake hose (14 N.m)**.

II - FINAL OPERATION

- ❑ Refit the bulkhead soundproofing.
- ❑ Refit:
  - the soundproofing clips (if fitted to the vehicle),
  - the front engine cover (if fitted to the vehicle).
- ❑ Remove the **pedal press**.
- ❑ Bleed the brake circuit (see **30A**, **General information**, **Braking circuit: Bleed**, page **30A-4**) .
- ❑ Refit the front left-hand wheel (see **35A**, **Wheels and tyres**, **Wheel: Removal - Refitting**, page **35A-1**)

ANTI-LOCK BRAKING SYSTEM

Equipment required
pedal press

Tightening torques ▽	
brake pipe union on the hydraulic unit	**14 N.m**
brake pipe union on the brake hose	**14 N.m**

IMPORTANT
To avoid all risk of damage to the systems, apply the safety and cleanliness instructions and operation recommendations before carrying out any repair (see **31A**, **Front axle components**, **Front axle components: Precautions for the repair**, page **31A-1**) .

WARNING
Prepare for the flow of fluid, and protect the surrounding components.

REMOVAL

I - REMOVAL PREPARATION OPERATION

❑ Position the vehicle on a two-post lift (see **Vehicle: Towing and lifting**) (02A, Lifting equipment.

❑ Fit a **pedal press** in order to limit the outflow of brake fluid.

❑ Remove:

- the front right-hand wheel (see **35A**, **Wheels and tyres**, **Wheel: Removal - Refitting**, page **35A-1**) ,
- the front engine cover (if fitted to the vehicle).

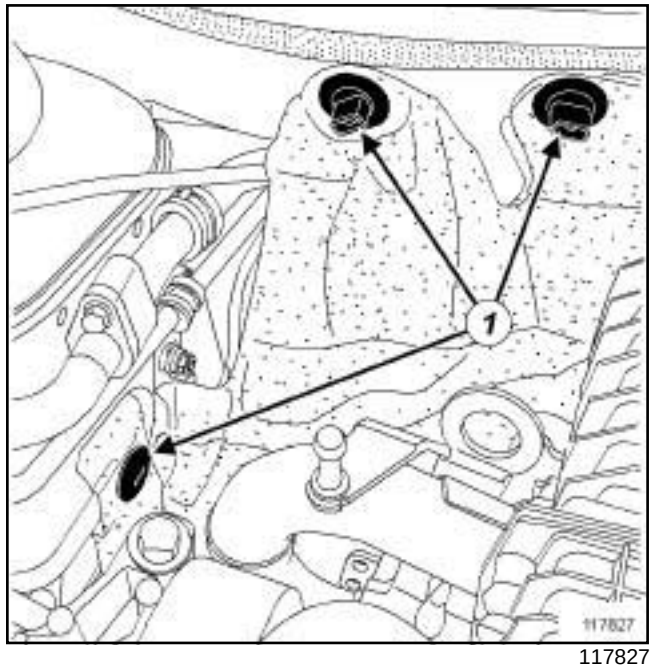

117827

❑ Remove the soundproofing clips (**1**) (if fitted to the vehicle).

❑ Move the soundproofing to one side in order to see the pipes.

II - REMOVAL OPERATION

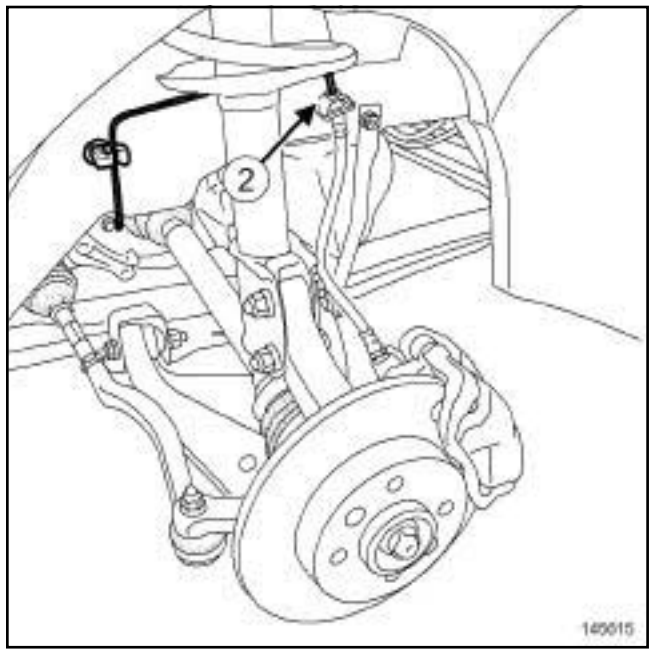

145615

❑ Undo the brake pipe union (**2**) on the brake hose.

❑ Remove the brake pipe from the retaining bracket.

❑ Detach the brake pipe.

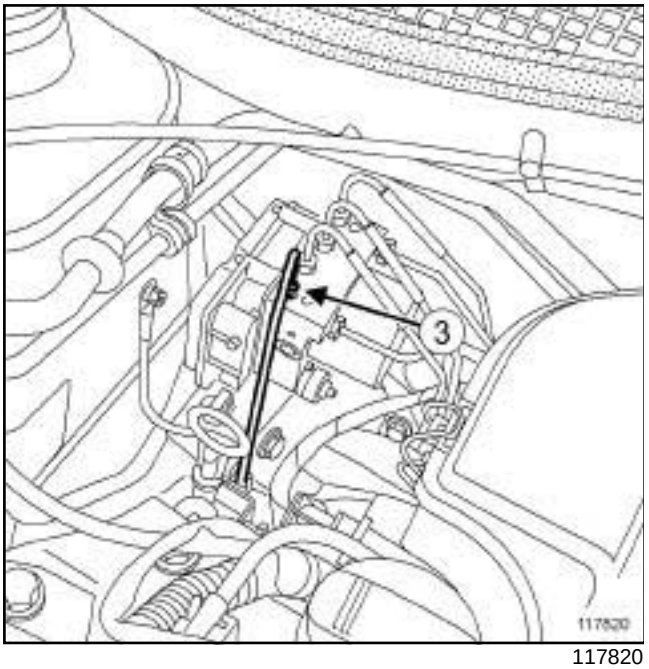

117820

- ❑ Undo the brake pipe union (**3**) on the hydraulic unit.
- ❑ Remove the brake pipe between the hydraulic unit and front right-hand brake hose.

REFITTING

I - REFITTING OPERATION

- ❑ Refit the brake pipe between the hydraulic unit and front right-hand brake hose.
- ❑ Attach the brake pipe.
- ❑ Refit:
  - the brake pipe union on the front right-hand brake hose,
  - the brake pipe union on the hydraulic unit.
- ❑ Torque tighten:
  - the **brake pipe union on the hydraulic unit (14 N.m)**,
  - the **brake pipe union on the brake hose (14 N.m)**.

II - FINAL OPERATION

- ❑ Refit the bulkhead soundproofing.
- ❑ Refit:
  - the soundproofing clips (if fitted to the vehicle),
  - the front engine cover (if fitted to the vehicle).
- ❑ Remove the **pedal press**.
- ❑ Bleed the braking circuit (see **30A**, **General information**, **Braking circuit: Bleed**, page **30A-4**) .
- ❑ Refit the front right-hand wheel (see **35A**, **Wheels and tyres**, **Wheel: Removal - Refitting**, page **35A-1**) .

Tightening torques ▽	
shock absorber base bolts	**105 N.m**
nut or bolt of the lower ball joint	**62 N.m**
track rod end nut	**37 N.m**
hub nut	**280 N.m**
brake calliper mounting bolts	**105 N.m**

IMPORTANT

To avoid all risk of damage to the systems, apply the safety and cleanliness instructions and operation recommendations before carrying out any repair:

- (see **31A**, **Front axle components**, **Front axle components: Precautions for the repair**, page **31A-1**) ,
- (see **Vehicle: Precautions for the repair**) (01D, Mechanical introduction).

WARNING

In order not to damage the brake hose:

- do not tension the hose,
- do not twist the hose,
- check that there is no contact with the surrounding components.

REMOVAL

I - REMOVAL PREPARATION OPERATION

❑ Position the vehicle on a two-post lift (see **Vehicle: Towing and lifting**) (02A, Lifting equipment).

❑ Unlock the steering column.

❑ Remove the front wheel on the side concerned (see **35A**, **Wheels and tyres**, **Wheel: Removal - Refitting**, page **35A-1**) .

II - REMOVAL OPERATION

ANTI-LOCK BRAKING SYSTEM

❑ Remove the wheel speed sensor (depending on the vehicle equipment) (see **38C**, **Anti-lock braking system**, **Front wheel speed sensor: Removal - Refitting**, page **38C-7**) .

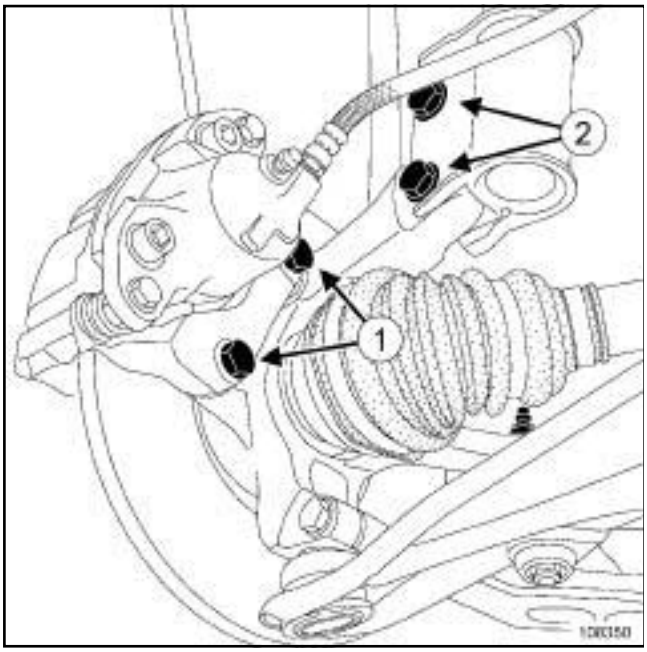

108350

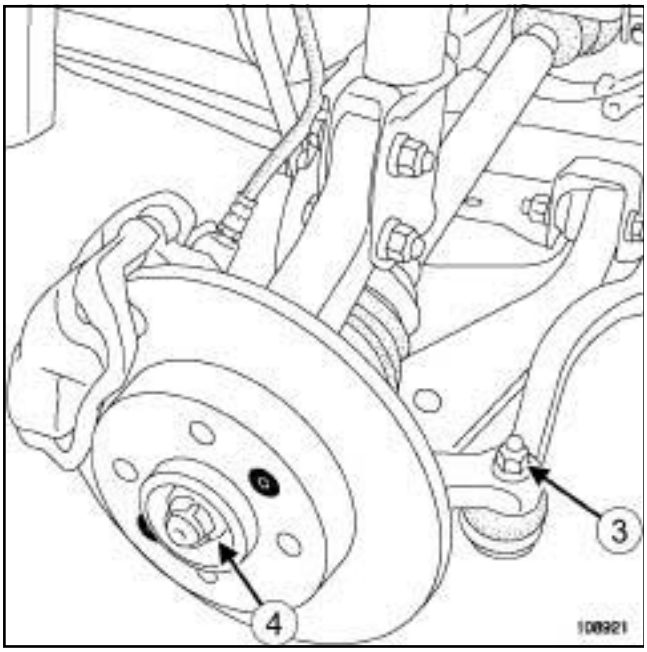

108921

❑ Remove the front brake calliper mounting bolts ***(1)*** .

❑ Suspend the «calliper - front brake calliper mounting » assembly on the suspension spring.

WARNING

In order to prevent irreversible damage to the front hub bearing:

- Do not loosen or tighten the driveshaft nut when the wheels are on the ground.
- Do not place the vehicle with its wheels on the ground when the driveshaft has been loosened or removed.

❑ Remove:

- the hub nut (**4**) using the,
- the front brake disc (see **31A**, **Front axle components**, **Front brake disc: Removal - Refitting**, page **31A-15**) .

WHEEL DISC PROTECTOR

❑ Remove the front brake disc protector (see **31A**, **Front axle components**, **Front brake disc protector: Removal - Refitting**, page **31A-13**) .

❑ Remove:

- the track rod end nut (**3**) ,
- the nut or bolt of the lower ball joint,
- the shock absorber base bolts (**2**) .

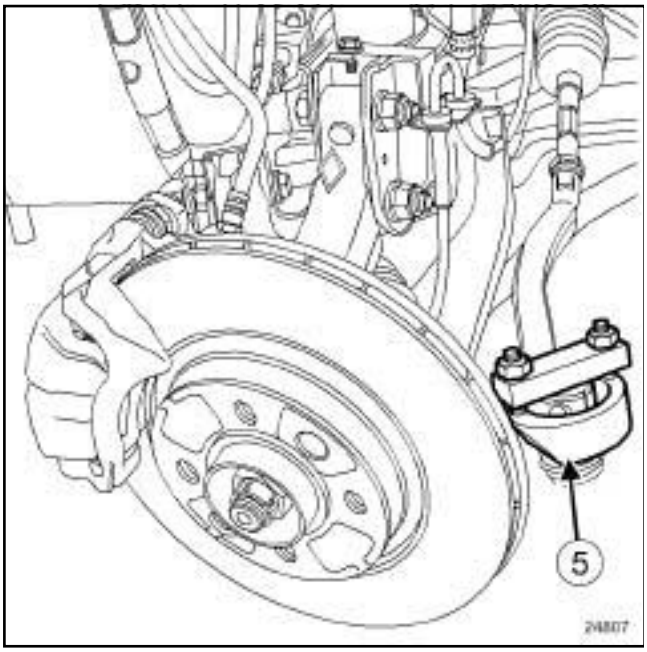

24807

❑ Extract the track rod end using the (**5**) .

❑ Push back the front driveshaft from the stub axle carrier using the toolsand.

❑ Remove the front driveshaft hub carrier.

REFITTING

I - REFITTING PREPARATION OPERATION

❑ **parts always to be replaced: Front wheel hub nut**

❑ **parts always to be replaced: Track rod end nut**

❑ **parts always to be replaced: Front driveshaft lower arm ball joint nut**

❑ **parts always to be replaced: front shock absorber lower nut**

II - REFITTING OPERATION

❑ Refit:

- the front driveshaft hub carrier,
- the track rod end,
- the shock absorber base bolts
- the lower arm ball joint,

WHEEL DISC PROTECTOR

❑ Refit the brake disc protector (see **31A**, **Front axle components**, **Front brake disc protector: Removal - Refitting**, page **31A-13**) .

❑ Refit:

- the brake disc (see **31A**, **Front axle components**, **Front brake disc: Removal - Refitting**, page **31A-15**) ,
- the hub nut.

❑ Use **HIGH STRENGTH THREAD LOCK** (see) (04B, Consumables - Products) to coat the threading of the calliper mounting bolts.

❑ Refit:

- the « calliper - front brake calliper mounting » assembly
- the front brake calliper mounting bolts.

ANTI-LOCK BRAKING SYSTEM

❑ Refit the wheel speed sensor (see **38C**, **Anti-lock braking system**, **Front wheel speed sensor: Removal - Refitting**, page **38C-7**) .

❑ Torque tighten:

- the **shock absorber base bolts (105 N.m)**,
- the **nut or bolt of the lower ball joint (62 N.m)**,
- the **track rod end nut (37 N.m)**,
- the **hub nut (280 N.m)**,
- the **brake calliper mounting bolts (105 N.m)**.

III - FINAL OPERATION

❑ Refit the front wheel on the side concerned (see **35A**, **Wheels and tyres**, **Wheel: Removal - Refitting**, page **35A-1**) .

IMPORTANT
To avoid any accident, bring the pistons, brake pads and brake discs into contact by depressing the brake pad several times.

IMPORTANT

To avoid all risk of damage to the systems, apply the safety and cleanliness instructions and operation recommendations before carrying out any repair (see **31A**, **Front axle components**, **Front axle components: Precautions for the repair**, page **31A-1**) .

WARNING

In order not to damage the brake hose:

- do not tension the hose,
- do not twist the hose,
- check that there is no contact with the surrounding components.

WARNING

In order to prevent irreversible damage to the front hub bearing:

- Do not loosen or tighten the driveshaft nut when the wheels are on the ground.
- Do not place the vehicle with its wheels on the ground when the driveshaft has been loosened or removed.

REMOVAL

I - REMOVAL PREPARATION OPERATION

❑ Position the vehicle on a two-post lift (see **Vehicle: Towing and lifting**) (02A, Lifting equipment).

❑ Remove the front wheel (see **35A**, **Wheels and tyres**, **Wheel: Removal - Refitting**, page **35A-1**) .

ANTI-LOCK BRAKING SYSTEM

❑ Remove the front wheel speed sensor (see **38C**, **Anti-lock braking system**, **Front wheel speed sensor: Removal - Refitting**, page **38C-7**) .

❑ Remove:

- the front brake disc (see **31A**, **Front axle components**, **Front brake disc: Removal - Refitting**, page **31A-15**) ,
- the front driveshaft hub carrier (see **31A**, **Front axle components**, **Front driveshaft hub carrier: Removal - Refitting**, page **31A-27**) .

II - REMOVAL OPERATION

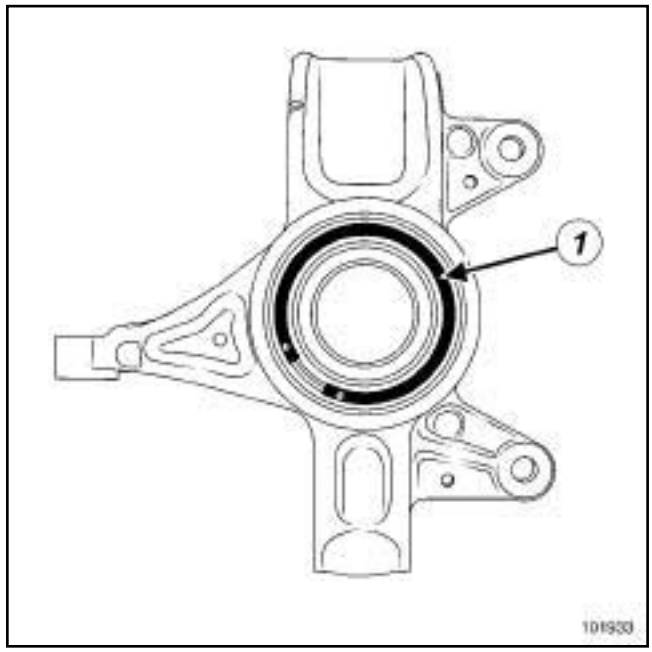

101933

❑ Remove the elastic ring (**1**) from the front driveshaft hub carrier.

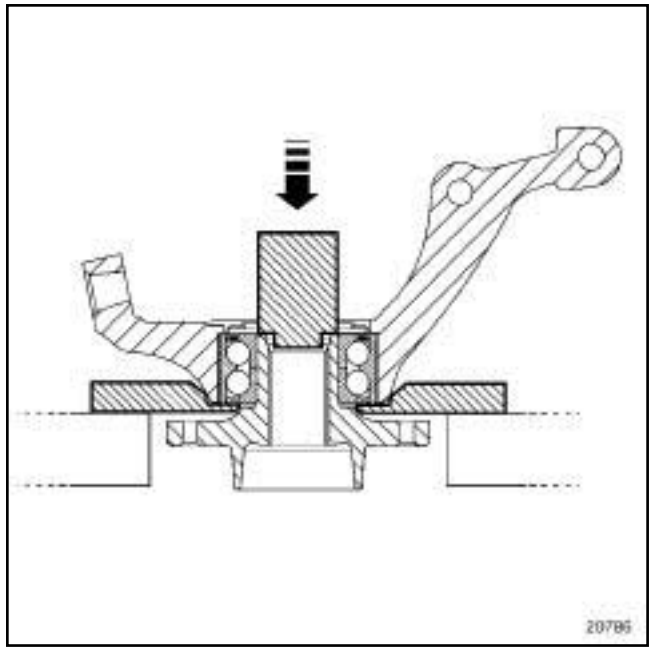

20786

❑ Remove the hub with a press, applying pressure with a tube with an external diameter of **42 mm**.

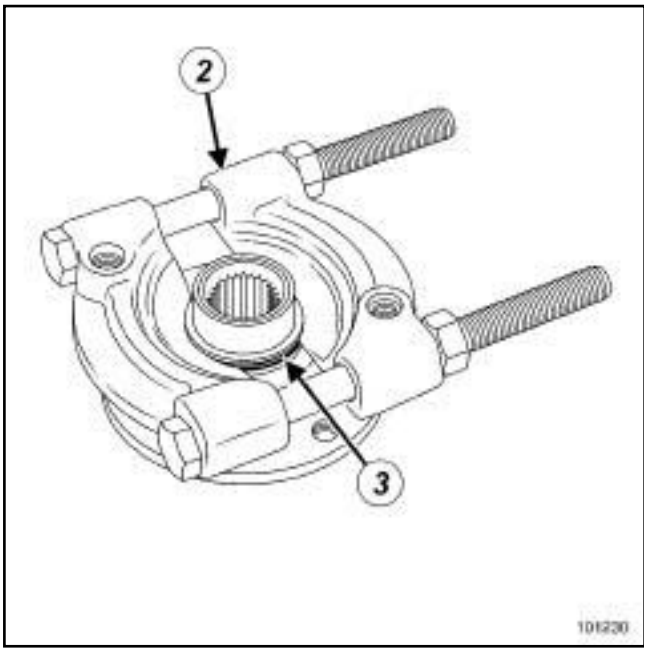

101230

- Place the extractor jaws (**2**) in the groove of the internal bush (**3**) .
- Remove the internal bush from the hub, applying pressure on the hub with a tube with an external diameter of **42 mm**.

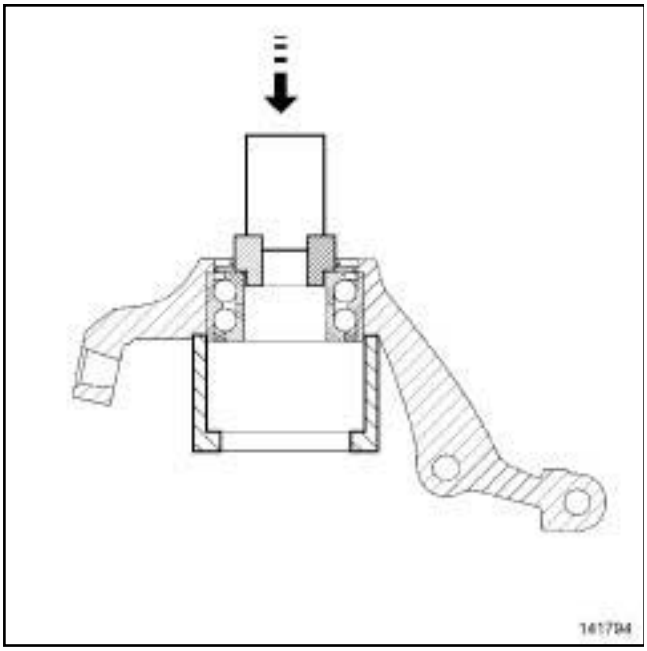

141794

- Remove the bearing from the front hub carrier by applying pressure to the inner bush with a tube with an external diameter of **75 mm**.

REFITTING

I - REFITTING PREPARATION OPERATION

- **parts always to be replaced: Front hub carrier bearing**.
- **parts always to be replaced: Front stub axle carrier bearing rubber ring**.

> **WARNING**
> To ensure that the wheel speed sensor works properly, do not mark the sensor target on the bearing.

> **WARNING**
> Do not press the bearing's internal bush so as to avoid damaging the bearing (very high shrink-fitting force).

- Use **SURFACE CLEANER** (see) (04B, Consumables - Products) to clean:
  - the internal and external surfaces of the bearing, in contact with the hub carrier and the hub,
  - the hub carrier surfaces in contact with the bearing,
  - the hub surfaces in contact with the bearing.
- Check the condition of the hub surface and the bore of the hub carrier in contact with the bearing.
- Replace any component whose contact surfaces have deep scratches or cracks.

II - REFITTING OPERATION

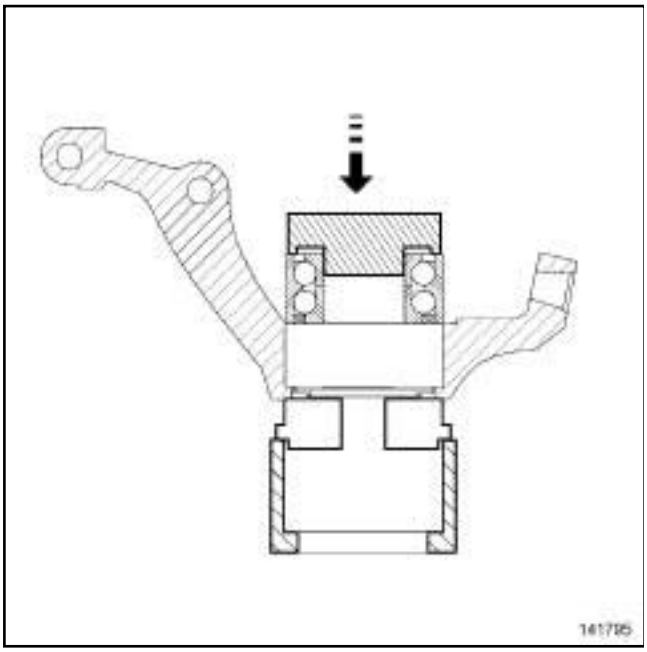

141795

115568

❑

WARNING
To ensure that the wheel speed sensor works properly, do not mark the sensor target (**3**) on the bearing.

❑ Position the sensor target on the bearing towards the vehicle interior.

❑ Apply pressure to the external bush with a tube with an external diameter of **80 mm** and an internal diameter of **75 mm** (old bearing).

❑ Apply a fitting force of **50,000 N** to ensure that the bearing is correctly fitted on the hub carrier shoulder.

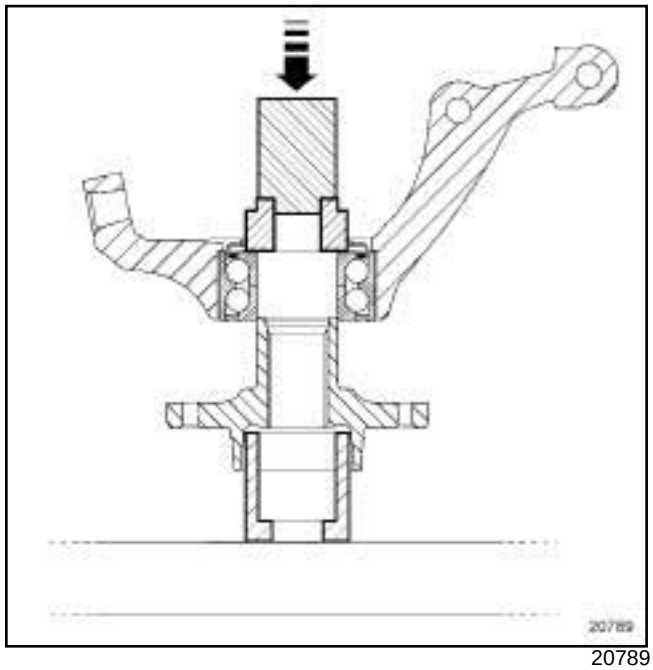

20789

❑ Refit:

- the hub using a tube with an external diameter of **55 mm**,
- the elastic ring on the front driveshaft hub carrier.

III - FINAL OPERATION

❑ Proceed in the reverse order to removal.

IMPORTANT
To avoid any accident, bring the pistons, brake pads and brake discs into contact by depressing the brake pad several times.

Equipment required
indelible pencil
spring compressor

Tightening torques ▽	
internal nut of the shock absorber rod	**62 N.m**
shock absorber nut on the body	**44 N.m**
shock absorber base bolts	**105 N.m**
brake hose mounting bolt	**8 N.m**

IMPORTANT
To avoid all risk of damage to the systems, apply the safety and cleanliness instructions and operation recommendations before carrying out any repair (see **31A**, **Front axle components**, **Front axle components: Precautions for the repair**, page **31A-1**) .

REMOVAL

I - REMOVAL PREPARATION OPERATION

❑ Position the vehicle on a two-post lift (see) (02A, Lifting equipment.

❑ Unlock the steering column.

❑ Remove the front wheel (see **35A**, **Wheels and tyres**, **Wheel: Removal - Refitting**, page **35A-1**) .

❑

Note:
Make sure the colours of the springs and shock absorbers are identical with the spare parts.

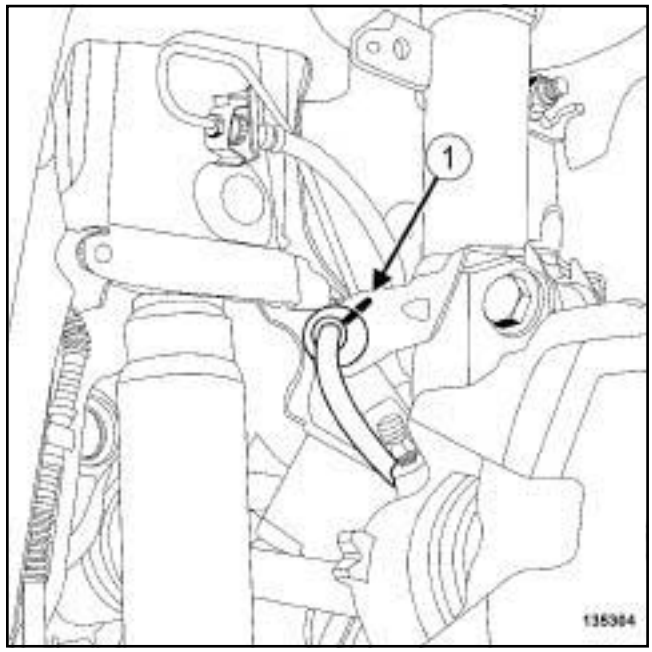

135304

❑ Mark the position of the cap on the base of the shock absorber using a **indelible pencil** (**1**) .

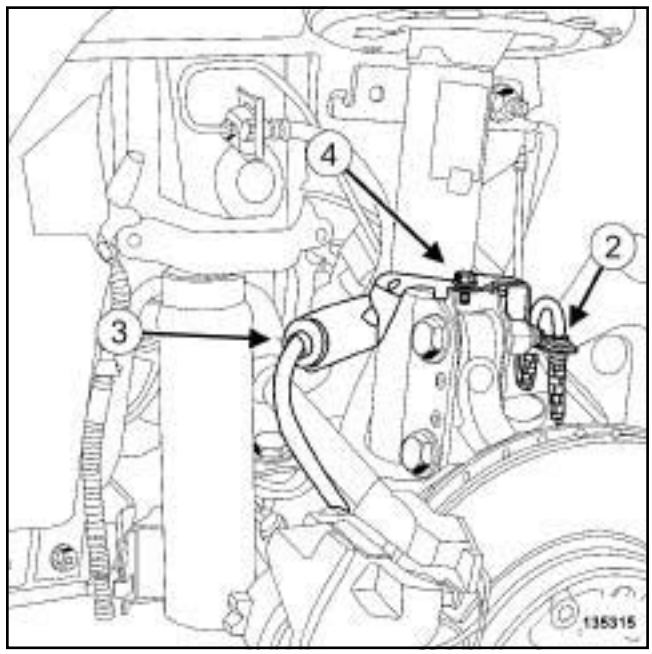

135315

❑ Unclip:

- the wiring (**2**) of the wheel speed sensor from the brake hose mounting,
- the cap (**3**) of the brake hose mounting.

❑ Remove:

- the bolt (**4**) of the brake hose mounting,
- the brake hose mounting.

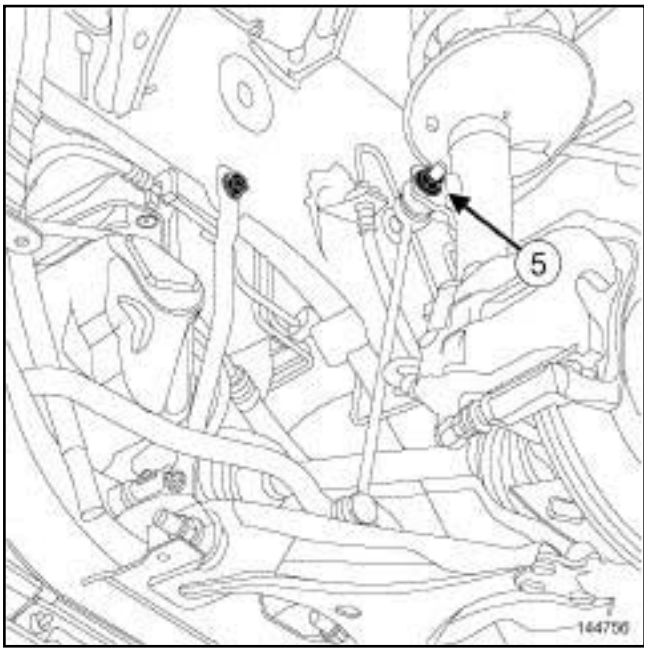

144756

❑ Remove the nut (**5**) of the anti-roll bar tie-rod on the shock absorber.

II - REMOVAL OPERATION

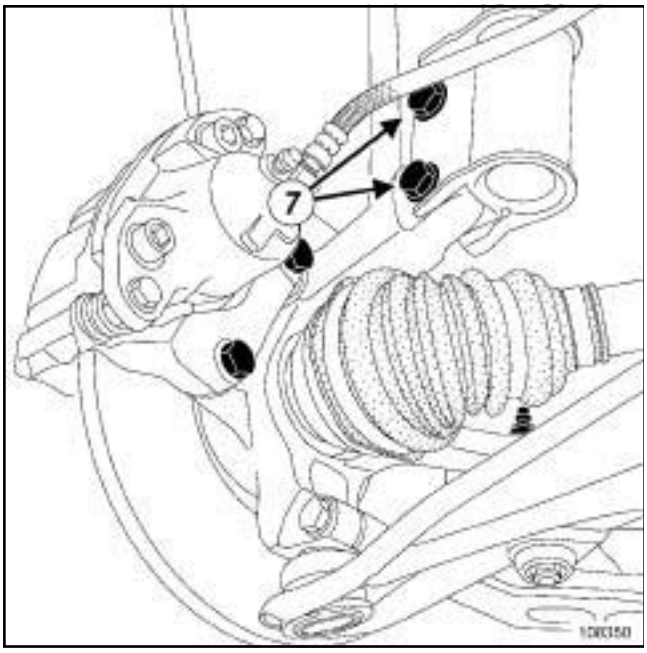

108350

❑ Remove the shock absorber base bolts (**7**) .

❑ Remove the shock absorber base from the stub axle carrier using the hub carrier for support.

❑ Attach the hub carrier to the body.

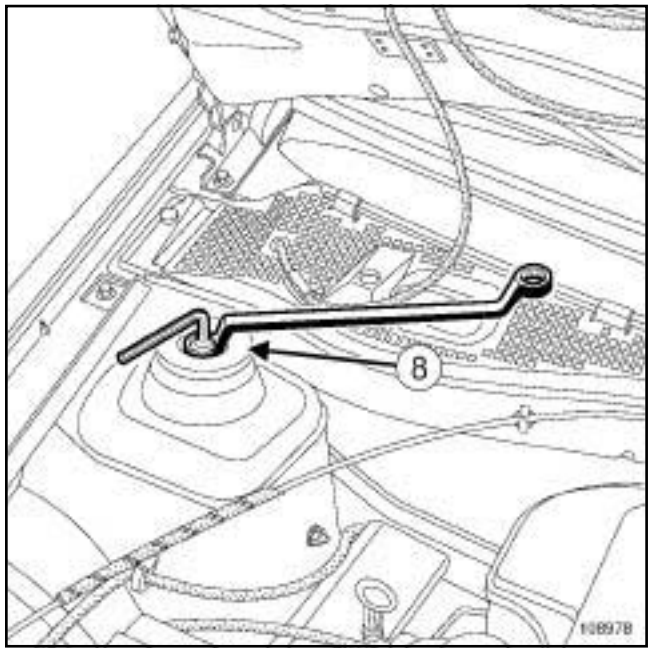

108978

❑ Remove:

- the shock absorber cage with a male Allen key and a ring spanner,
- the cage (**8**) ,
- the « spring - shock absorber » assembly.

❑ Place the appropriate cups on the **spring compressor** and position the assembly on the spring.

❑ Detach the spring from the cups by compressing the spring.

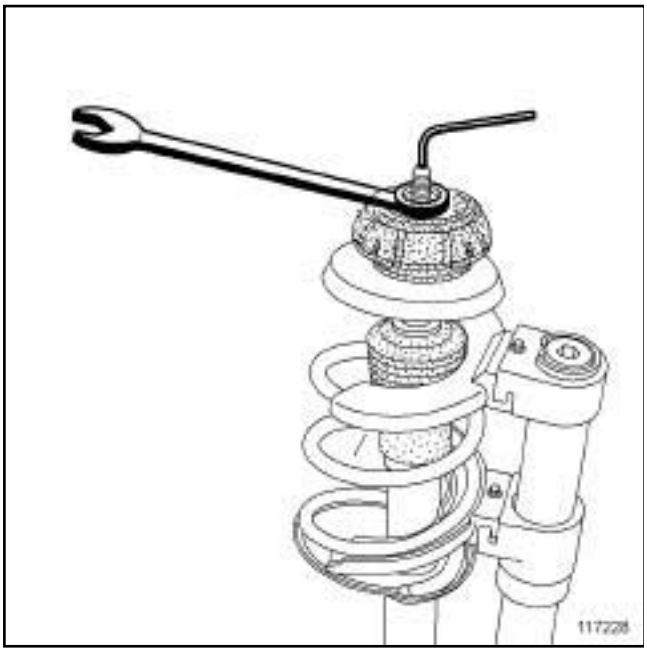

117228

- ❑ Remove the shock absorber rod with a male Allen key and a ring spanner.
- ❑ Separate the various components which make up the « spring/shock absorber » assembly.

REFITTING

I - REFITTING PREPARATION OPERATION

❑

> Note:
>
> When removing or refitting springs, you must not strike the springs, as this could damage their surface treatments.

- ❑ If necessary, replace any faulty filter unit components (see **31A**, **Front axle components**, **Filter unit assembly: Removal - Refitting**, page **31A-38**) .
- ❑ **parts always to be replaced: front shock absorber rod nut**
- ❑ **parts always to be replaced: Filter unit assembly**
- ❑ **parts always to be replaced: front anti-roll bar tie-rod nut**
- ❑ **parts always to be replaced: front shock absorber lower nut**

II - REFITTING OPERATION

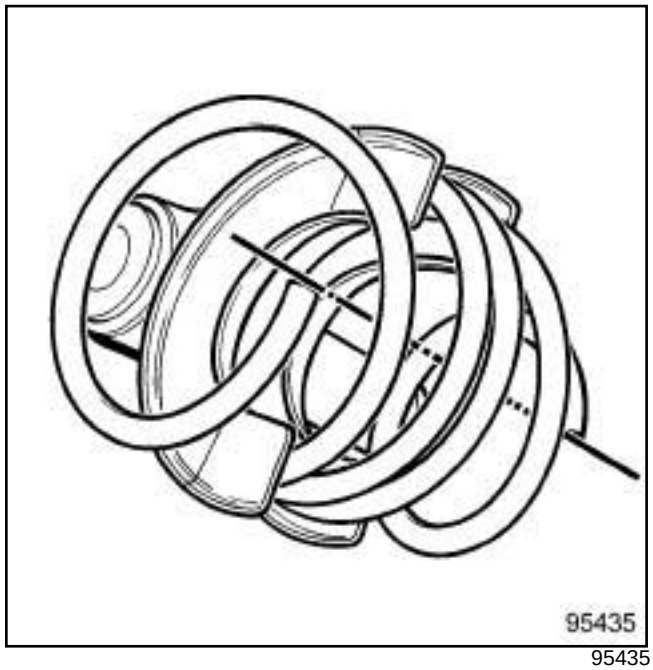

95435

- ❑ Place the **spring compressor** in a vice.

> Note:
>
> When replacing the spring for easier fitting, ensure that the positioning and orientation of the spring and the tool cups are correct.

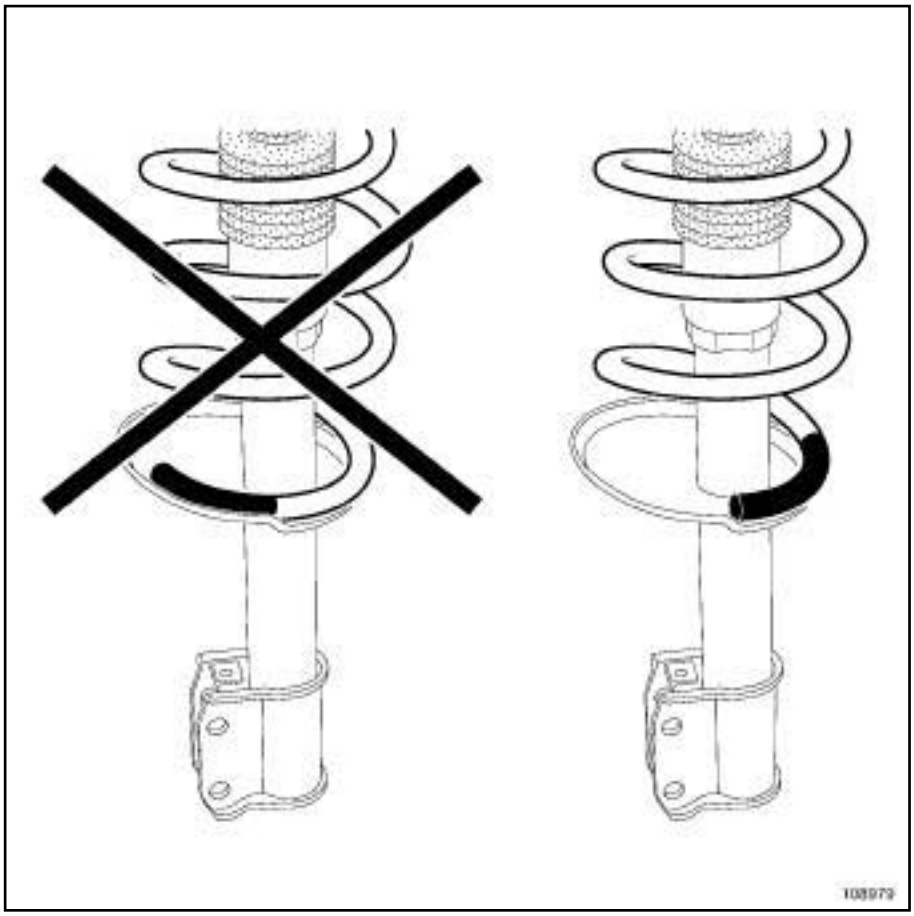

108979

❑ Insert the spring in the neck of the cup.

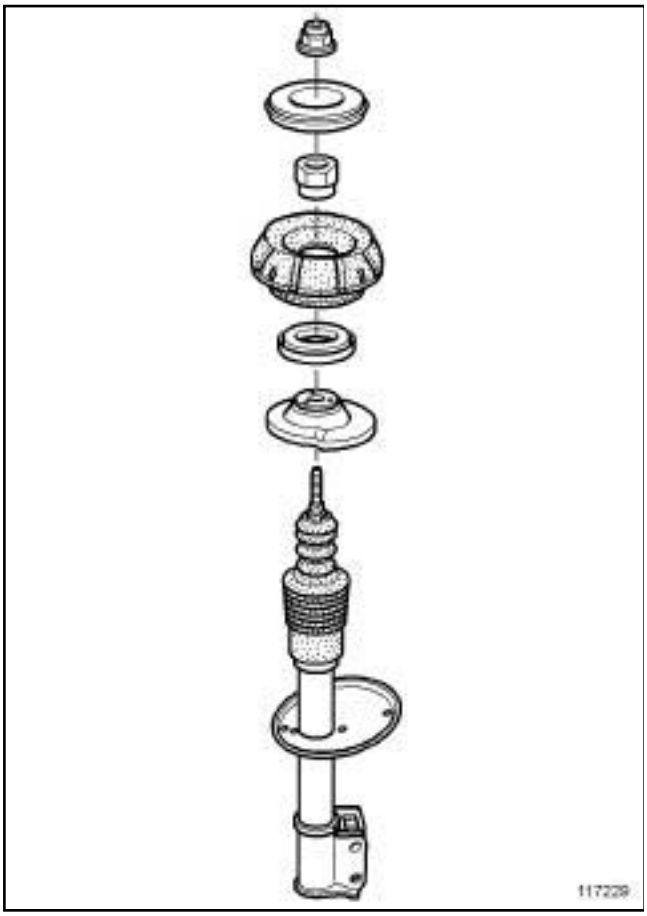

117229

- ❑ Respect the order and direction of fitting for the constituent parts.
- ❑ Torque tighten the **internal nut of the shock absorber rod (62 N.m)**.
- ❑ Decompress the spring.
- ❑ Remove the spring compressor.
- ❑ Refit:
  - the « spring/shock absorber » assembly,
  - the shock absorber turret ***(8)*** using an Allen key and a ring spanner,
  - the shock absorber base on the hub carrier.
- ❑ Torque tighten:
  - the **shock absorber nut on the body (44 N.m)**,
  - the **shock absorber base bolts (105 N.m)**.

III - FINAL OPERATION

- ❑ Refit the brake hose mounting.
- ❑ Torque tighten the **brake hose mounting bolt (8 N.m)**.
- ❑ Clip the brake hose cap onto the support.
- ❑ Clip the speed sensor onto the support.
- ❑ Refit the front wheel (see **35A**, **Wheels and tyres**, **Wheel: Removal - Refitting**, page **35A-1**) .

IMPORTANT

To avoid all risk of damage to the systems, apply the safety and cleanliness instructions and operation recommendations before carrying out any repair (see **31A**, **Front axle components**, **Front axle components: Precautions for the repair**, page **31A-1**) .

REMOVAL

I - REMOVAL PREPARATION OPERATION

❏ Position the vehicle on a two-post lift (see **Vehicle: Towing and lifting**) (02A, Lifting equipment).

❏ Remove:

- the front wheel on the side concerned (see **35A**, **Wheels and tyres**, **Wheel: Removal - Refitting**, page **35A-1**) ,
- the shock absorber (see **31A**, **Front axle components**, **Front shock absorber and spring: Removal - Refitting**, page **31A-33**) .

II - REMOVAL OPERATION

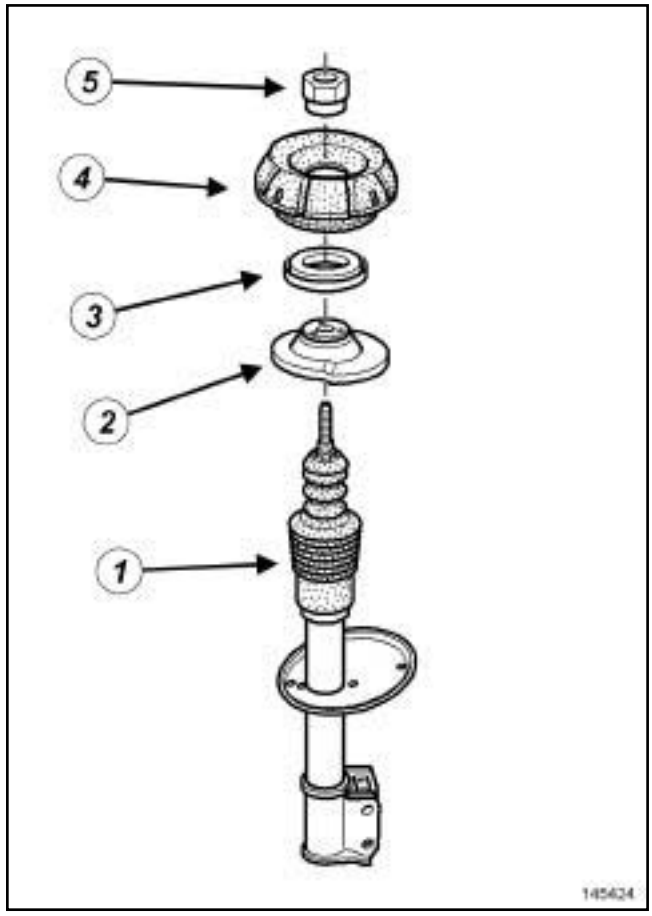

145424

(**1**)	Front impact stop
(**2**)	Upper cup
(**3**)	Shock absorber stop
(**4**)	Front filter unit
(**5**)	Spacer

❏ Separate the various components of the « spring - shock absorber » assembly.

❏ Visually check the condition of the component parts of the filter unit.

❏ All faulty components must always be replaced.

REFITTING

I - REFITTING PREPARATION OPERATION

❏ Fit the components in the order indicated in the illustration.

II - REFITTING OPERATION

❏ Proceed in the reverse order to removal.

Tightening torques ▽	
front and rear bolts mounting the lower arm on the subframe	**180 N.m**
lower arm ball joint nut	**62 N.m**

IMPORTANT

To avoid all risk of damage to the systems, apply the safety and cleanliness instructions and operation recommendations before carrying out any repair (see **31A**, **Front axle components**, **Front axle components: Precautions for the repair**, page **31A-1**) .

WARNING

Do not use the lower arm for support with a lifting system.

REMOVAL

I - REMOVAL PREPARATION OPERATION

❑ Position the vehicle on a two-post lift (see **Vehicle: Towing and lifting**) (02A, Lifting equipment).

❑ Unlock the steering column.

❑ Remove:

- the front wheel on the side in question (see **35A**, **Wheels and tyres**, **Wheel: Removal - Refitting**, page **35A-1**) ,
- the front wheel arch side liner.

II - REMOVAL OPERATION

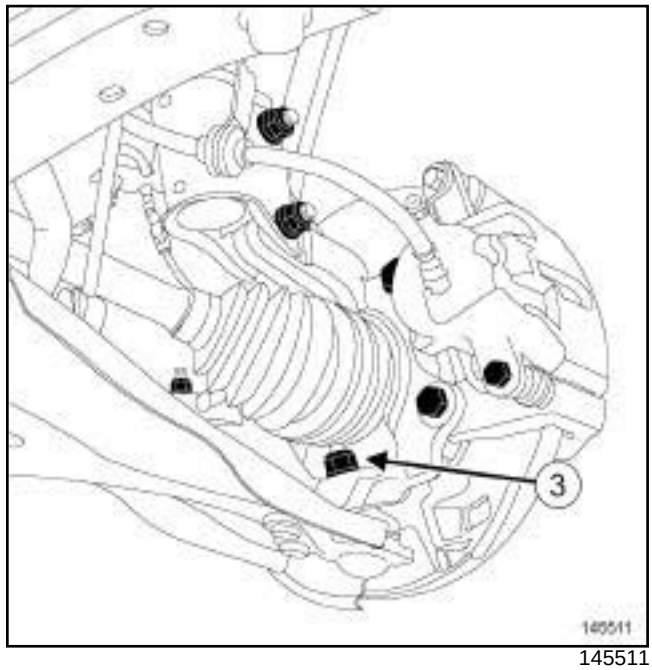

145511

❑ Remove the lower arm ball joint nut (**3**) .

❑ Remove the lower arm ball joint.

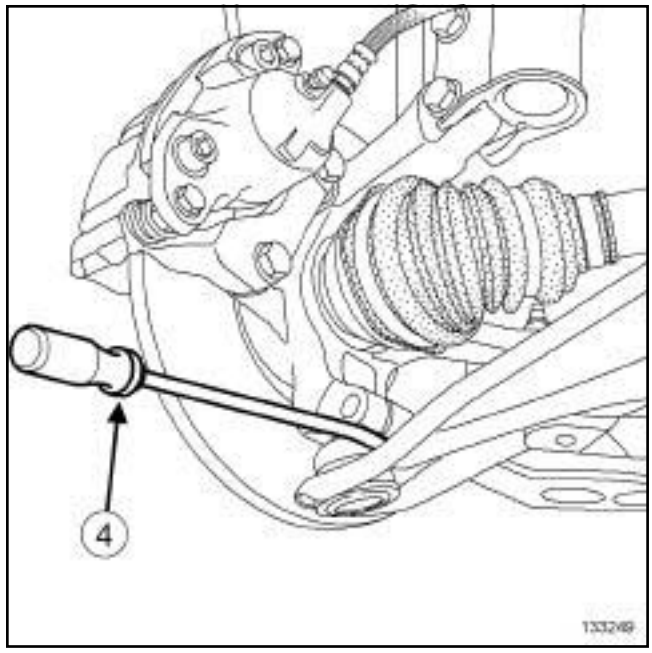

133249

❑

Note:

If the lower ball joint is stuck in the stub axle carrier and it will not come out, extract the ball joint using an angled lever (**4**) as illustrated in the diagram.

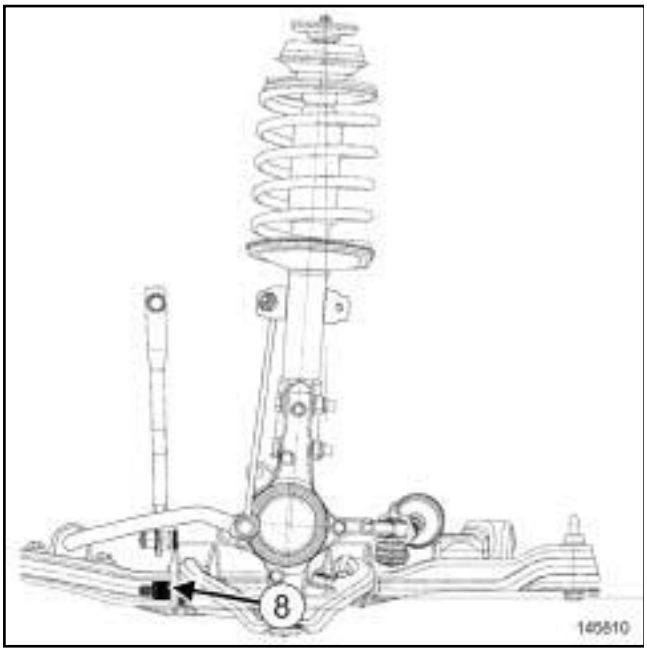

145810

❑ Remove:

- the lower arm front and rear bolts (**8**) ,
- the lower arm.

REFITTING

I - REFITTING PREPARATION OPERATION

❑ **parts always to be replaced: Front driveshaft lower arm bolt**

❑ Always replace the lower arm nuts.

❑ Position the heads of the lower arm bolts so that they face the rear of the vehicle.

II - REFITTING OPERATION

❑ Refit:

- the lower arm,
- the lower arm ball joint in its housing.

❑ Torque tighten:

- the **front and rear bolts mounting the lower arm on the subframe (180 N.m)**,
- the **lower arm ball joint nut (62 N.m)**.

III - FINAL OPERATION

❑ Refit:

- the front wheel arch side liner,
- the front wheel on the side in question (see **35A**, **Wheels and tyres**, **Wheel: Removal - Refitting**, page **35A-1**) .

❑ Check the values of the axle assemblies (see **Front axle assembly: Adjustment values**) .

CHECK

CHECKING THE FRONT DRIVESHAFT LOWER ARM BALL JOINT

❏ Position the vehicle on a two-post lift (see **Vehicle: Towing and lifting**) (02A, Lifting equipment).

1 - Check the condition of the lower arm ball joint gaiter

❏ Check:

- the gaiter crimping on the front driveshaft lower arm ball joint,
- that the gaiter is not torn.

If the lower arm ball joint gaiter of the front driveshaft is in poor condition or not crimped, replace the lower arm of the front driveshaft (see **31A**, **Front axle components**, **Front driveshaft lower arm: Removal - Refitting**, page **31A-39**) .

2 - Check the fitting of the lower arm ball joint

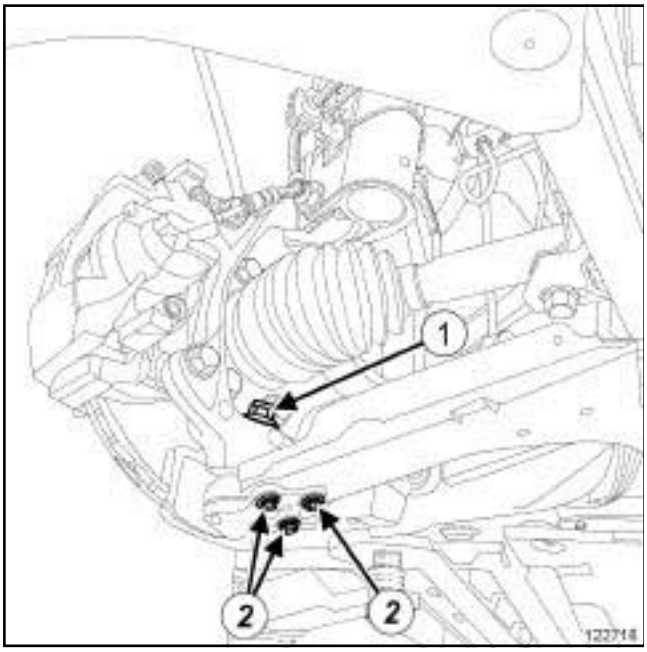

122718

❏ Check:

- the "front driveshaft lower arm ball joint - front driveshaft lower arm bolt - front driveshaft hub carrier" assembly is correctly positioned,
- the tightening torque of the lower arm ball joint nut (**1**) for the front driveshaft (see **30A**, **General information**, **Front axle system: Tightening torque**, page **30A-16**) ,
- that the rivets of the lower arm ball shaft for the front driveshaft are held in place (**2**) .

3 - Checking the play of the lower arm ball joint

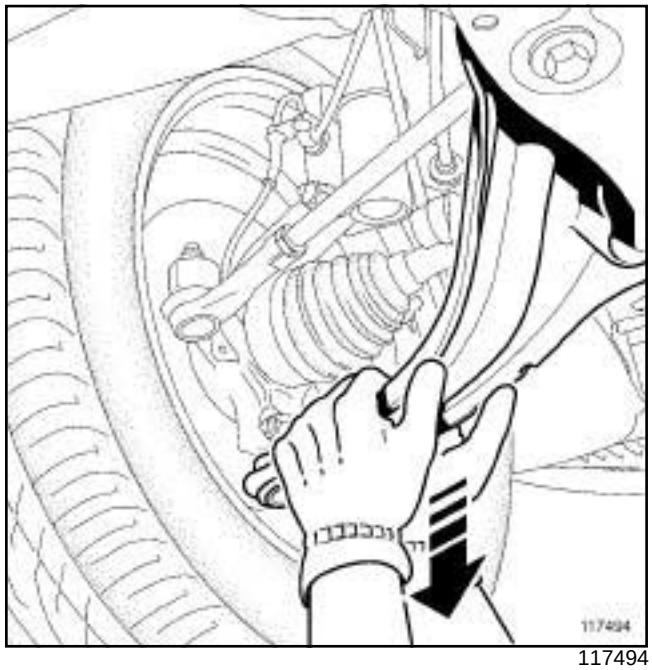

117494

❏ Check that there is no play in the front driveshaft lower arm ball joint:

- from a position underneath the vehicle,
- using both hands, hold the front driveshaft lower arm as close as possible to the wheel,
- push downwards several times.

If there is play in the front driveshaft lower arm ball joint, replace the front driveshaft lower arm (see **31A**, **Front axle components**, **Front driveshaft lower arm: Removal - Refitting**, page **31A-39**) .

Special tooling required	
Mot. 1390	Support for removal - refitting of engine - gearbox assembly
Tav. 1747	Threaded rods for carrying out subframe operations.

Equipment required
safety strap(s)

Tightening torques ▽	
subframe bolts	**110 N.m**
bracket bolts	**44 N.m**
steering box bolts	**180 N.m**
steering box heat shield bolts	**21 N.m**
power-assisted steering low pressure pipe bolt on the subframe	**21 N.m**
upper bolt of the subframe tie-rod	**21 N.m**

IMPORTANT

To avoid all risk of damage to the systems, apply the safety and cleanliness instructions and operation recommendations before carrying out any repair:

- (see **31A**, **Front axle components**, **Front axle components: Precautions for the repair**, page **31A-1**) ,
- (see **Vehicle: Precautions for the repair**) (01D, Mechanical introduction).

WARNING

To prevent any damage, do not use the lower arm as support for the lifting system.

REMOVAL

I - REMOVAL PREPARATION OPERATION

❑ Position the vehicle on a two-post lift (see **Vehicle: Towing and lifting**) (02A, Lifting equipment).

❑ Disconnect the battery (see **Battery: Removal - Refitting**) (80A, Battery).

❑ Remove the front wheels (see **35A**, **Wheels and tyres**, **Wheel: Removal - Refitting**, page **35A-1**) .

❑ Strap the cooling radiator on the front upper cross member.

❑ Remove the front bumper (see **Front bumper assembly: Exploded view**) (55A, Exterior protection).

❑ Remove:

- the wheel arch liner clips,
- the wheel arch liners,
- the engine undertray.

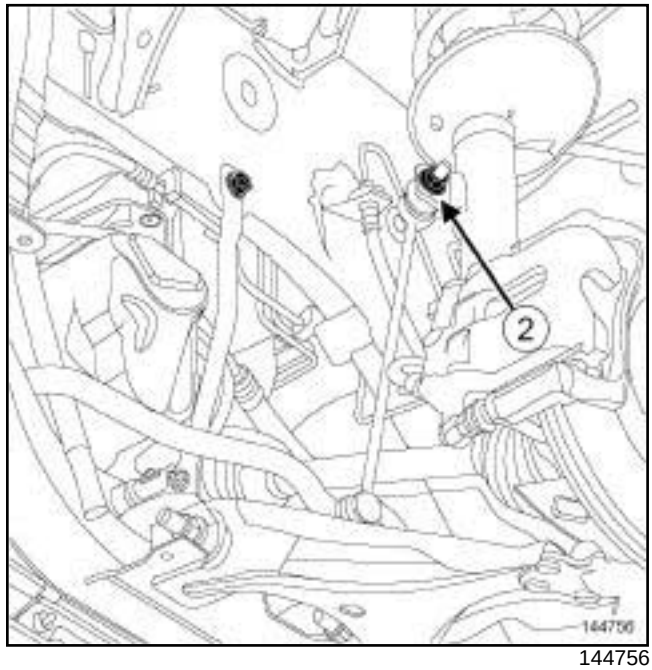

144756

❑ Remove the anti-roll bar nuts (**2**) .

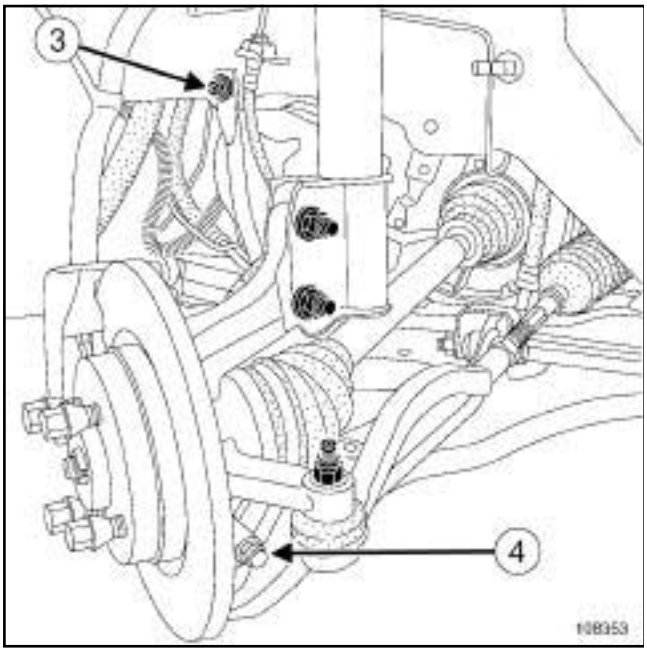

108353

❑ Remove:

- the subframe tie-rod upper bolts (**3**) ,
- the bolts or nuts (**4**) of the lower ball joints.

❑ Remove the lower ball joints.

POWER ASSISTED STEERING

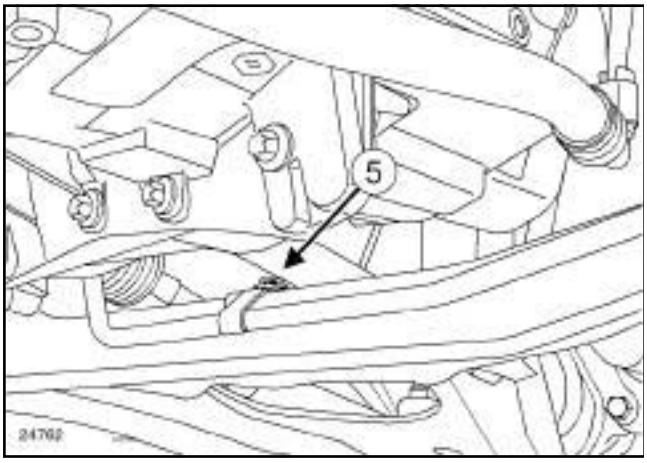

24762

❑ Remove the bolt (**5**) of the power-assisted steering low pressure pipe on the subframe.

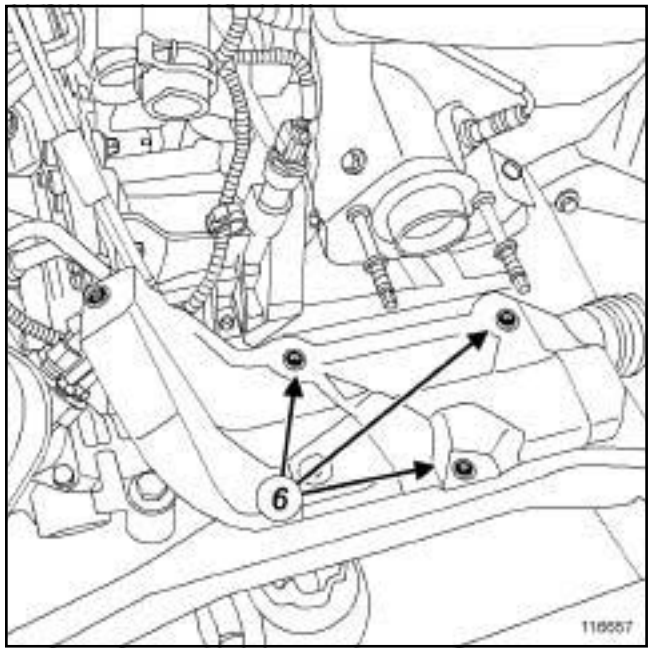

116657

❑ Remove the heat shield bolts (**6**) on the steering box.

❑ Remove:

- the steering box heat shield,
- the steering box bolts on the subframe.

❑ Attach the steering box on the body.

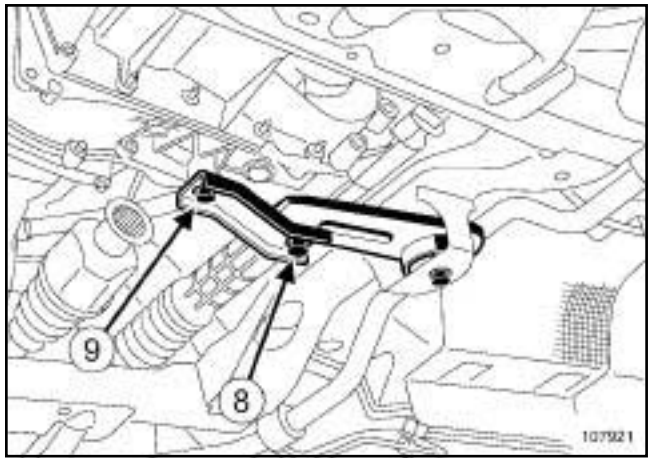

107921

❑ Remove:

- the engine tie-bar bolt (**8**) on the gearbox,
- the engine tie-bar retaining bracket bolt (**9**) ,
- the retaining bracket.

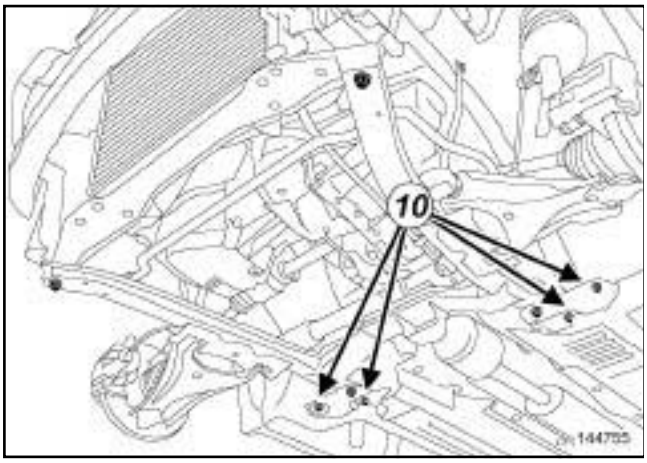

144755

- ❑ Remove the bolts (**10**) of the front axle subframe brackets.
- ❑ Unclip the oxygen sensor wiring on the heat shield.
- ❑ Position the **(Mot. 1390)** under the sub-frame.
- ❑ Lower the lift and adjust the pads to ensure that the subframe is secure on the tool.

II - REMOVAL OPERATION

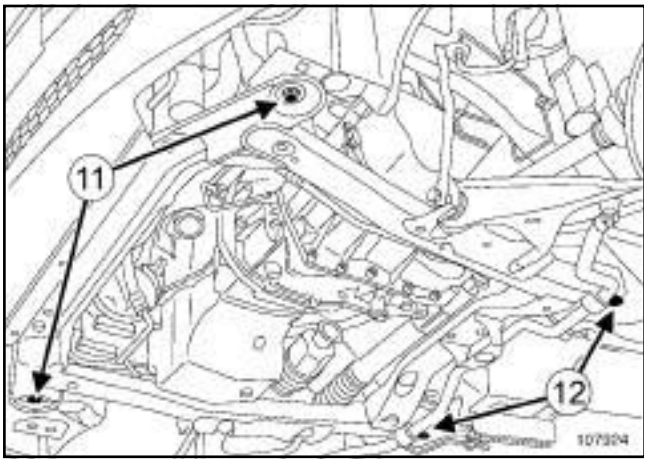

107924

- ❑ Remove bolts (**11**) and (**12**) from the subframe on the body.
- ❑ Remove the brackets.

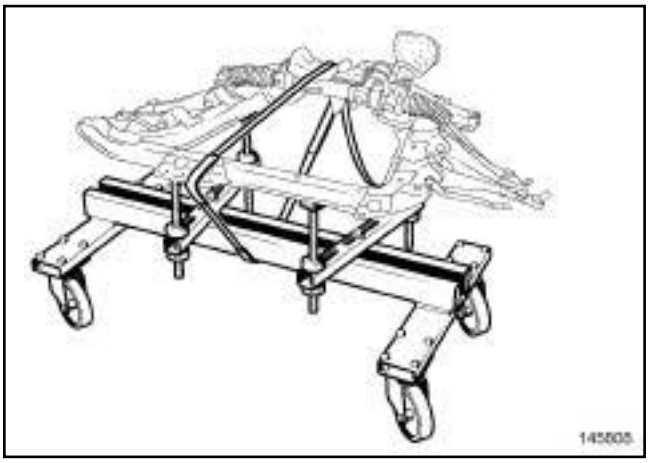

145808

- ❑ Strap the subframe to **(Mot. 1390)**.
- ❑ Raise the lift to separate the subframe from the body.
- ❑ Remove the sub-frame fittings.

REFITTING

I - REFITTING PREPARATION OPERATION

- ❑ **parts always to be replaced: Front sub-frame bolt**.
- ❑ Degrease the contact surface areas of the sub-frame and the body using **SURFACE CLEANER** (see **Vehicle: Parts and consumables for the repair**) (04B, Consumables - Products).

> **WARNING**
>
> To prevent the surrounding components from overheating, do not damage (tear, pierce, bend, etc.) a heat shield.
>
> Any damaged heat shields must be replaced.

II - REFITTING OPERATION

- ❑ Refit the subframe equipment.
- ❑ Position the subframe using **(Mot. 1390)**.

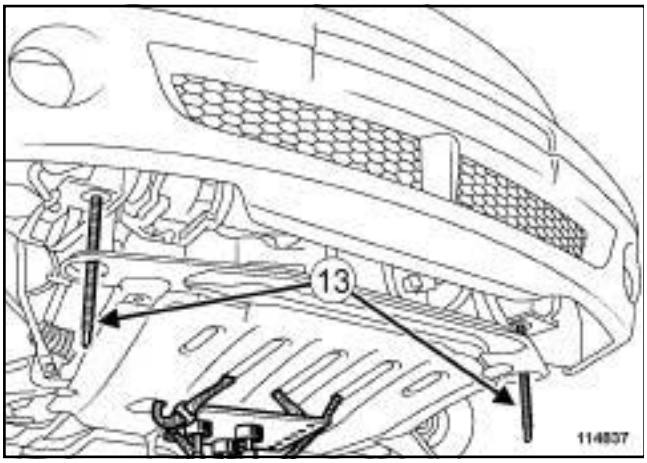

114837

- ❑ Fit two M12 threaded rods (**13**) of tool **(Tav. 1747)** in the position of the subframe front bolts to guide the subframe when it is being refitted.
- ❑ Refit the brackets.
- ❑ Refit the subframe.

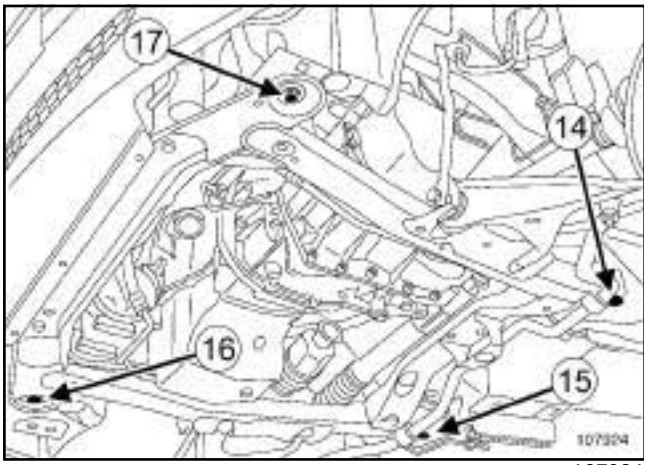

107924

- ❑ Tighten the subframe bolts in order until contact.
- ❑ Torque tighten in order the **subframe bolts (110 N.m)**.
- ❑ Torque tighten the **bracket bolts (44 N.m)**.
- ❑ Remove the **safety strap(s)**.
- ❑ Raise the lift.
- ❑ Refit the steering box on the subframe.
- ❑ Torque tighten the **steering box bolts (180 N.m)**.
- ❑ Refit the steering box heat-resistant protection.
- ❑ Torque tighten the **steering box heat shield bolts (21 N.m)**.
- ❑ Clip the oxygen sensor wiring onto the heat shield.
- ❑ Refit the rear suspended engine mounting (see **Lower engine tie-bar: Removal - Refitting**) (19D, Engine mounting).
- ❑ Refit the power-assisted steering low pressure pipe on the subframe.
- ❑ Torque tighten the **power-assisted steering low pressure pipe bolt on the subframe (21 N.m)**.
- ❑ Refit:
  - the lower ball joints in the hub carrier (see **31A**, **Front axle components**, **Front driveshaft lower arm: Removal - Refitting**, page **31A-39**) ,
  - the subframe tie rods.
- ❑ Torque tighten the **upper bolt of the subframe tie-rod (21 N.m)**.
- ❑ Refit:
  - the engine undertray,
  - the wheel arch liners.
- ❑ Refit the front bumper (see **Front bumper assembly: Exploded view**) (55A, Exterior protection).

III - FINAL OPERATION

- ❑ Remove the **safety strap(s)** from the cooling radiator.
- ❑ Refit the front wheels (see **35A**, **Wheels and tyres**, **Wheel: Removal - Refitting**, page **35A-1**) .
- ❑ Check the values of the axle assemblies (see) .
- ❑ Connect the battery (see **Battery: Removal - Refitting**) (80A, Battery).

Tightening torques ▽	
anti-roll bar tie rod nuts	**44 N.m**
anti-roll bar bearing bolts	**21 N.m**

Anti-roll bar specifications:

No.	Ø of the bar in mm
Black	**20**

IMPORTANT
To avoid all risk of damage to the systems, apply the safety and cleanliness instructions and operation recommendations before carrying out any repair (see **31A**, **Front axle components**, **Front axle components: Precautions for the repair**, page **31A-1**) .

REMOVAL

I - REMOVAL PREPARATION OPERATION

❑ Position the vehicle on a two-post lift (see **Vehicle: Towing and lifting**) (02A, Lifting equipment).

❑ Remove:

- the front wheels (see **35A**, **Wheels and tyres**, **Wheel: Removal - Refitting**, page **35A-1**) ,
- the engine undertray,
- the front wheel arch side liners.

II - REMOVAL OPERATION

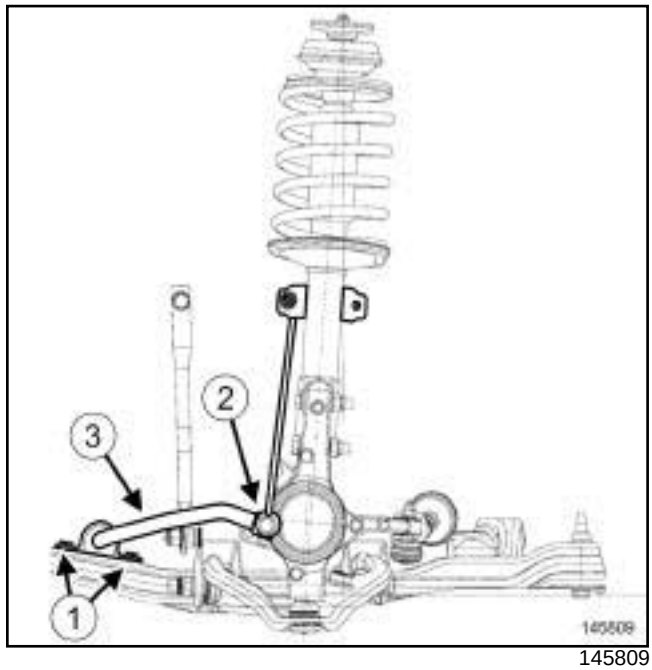

145809

❑ Remove:

- the anti-roll bar bearing bolts (**1**) ,
- the nuts (**2**) from the anti-roll bar tie rods,
- the anti-roll bar.

REFITTING

I - REFITTING PREPARATION OPERATION

❑ Clean the surfaces of the subframe resting against the anti-roll bar bearings using **SURFACE CLEANER** (see **Vehicle: Parts and consumables for the repair**) (04B, Consumables - Products).

❑ **parts always to be replaced: front anti-roll bar tie-rod nut**

II - REFITTING OPERATION

❑ Proceed in the reverse order to removal.

❑ Torque tighten:

- the **anti-roll bar tie rod nuts (44 N.m)**,
- the **anti-roll bar bearing bolts (21 N.m)**

I - SAFETY

For an operation requiring the use of a lift, follow the safety advice (see **Vehicle: Towing and lifting**) (02A, Lifting equipment).

Brake fluid is highly corrosive. Ensure any brake fluid spilt on parts of the vehicle is cleaned off.

II - CLEANLINESS

Protect any bodywork components that risk being damaged by brake fluid with a cover.

Clean around the braking system with **BRAKE CLEANER** (see **Vehicle: Parts and consumables for the repair**) (04B, Consumables - Products).

WARNING
Prepare for the flow of fluid, and protect the surrounding components.

III - GENERAL RECOMMENDATIONS

1 - Braking

Replace all the brake pads on one axle at the same time. Never mix brake pads of different brands or quality.

Lightly coat the threading on the support linkage with **GREASE BR 2** + (see **Vehicle: Parts and consumables for the repair**) (04B, Consumables - Products).

The brake mechanism components are different on the left and right-hand sides, so it is essential not to confuse them. On the left-hand brake: the bolt thread has a right-hand thread. On the right-hand brake: the bolt has a left-hand thread.

Adjust the brake pads by depressing the brake pedal repeatedly.

IMPORTANT
To avoid brake imbalance, both drums must be of the same diameter. Regrinding one drum necessitates regrinding of the opposite drum.

2 - Rear brake drums, rear brake pads

Remove all dust from the drums and the backplates using brake cleaner.

To ensure the wheel speed sensor operates correctly, do not mark the sensor target on the drum's magnetic ring gear.

3 - Suspension spring

When replacing the spring, ensure that the positioning and orientation of the spring and the spring compressor tool cups are correct.

Check that the spring compressor tool is operating correctly.

WARNING
To prevent the suspension spring from prematurely breaking, do not damage the anti-corrosion protection.

In the interests of safety, do not leave a spring compressed in the spring compressor tool.

4 - Rear axle

The shock absorber mountings are only to be tightened with the vehicle wheels on the ground.

Always replace the shock absorber upper mounting nut.

WARNING
To prevent any damage, do not use the rear axle as support for the lifting system.

WARNING
To prevent the components of the rear axle from deteriorating (rubber bushes, brake hoses, etc.) do not remove the two shock absorbers at the same time. Proceed one side at a time.

REAR BRAKE BOSCH: 9 INCHES

Replace all the brake pads on one axle at the same time. Never mix brake pads of different brands or qualities.

IMPORTANT
Consult the safety and cleanliness advice and operation recommendations before carrying out any repair (see **30A**, **General information**, **Brake circuit: Precautions for the repair**, page **30A-2**) .

REMOVAL

I - REMOVAL PREPARATION OPERATION

❏ Position the vehicle on a two-post lift (see **Vehicle: Towing and lifting**) (02A, Lifting equipment).

❏ Release the parking brake.

❏ Remove:

- the rear wheels (see **35A**, **Wheels and tyres**, **Wheel: Removal - Refitting**, page **35A-1**) ,
- the brake drums (see **33A**, **Rear axle components**, **Rear brake drum: Removal - Refitting**, page **33A-7**) .

II - REMOVAL OPERATION

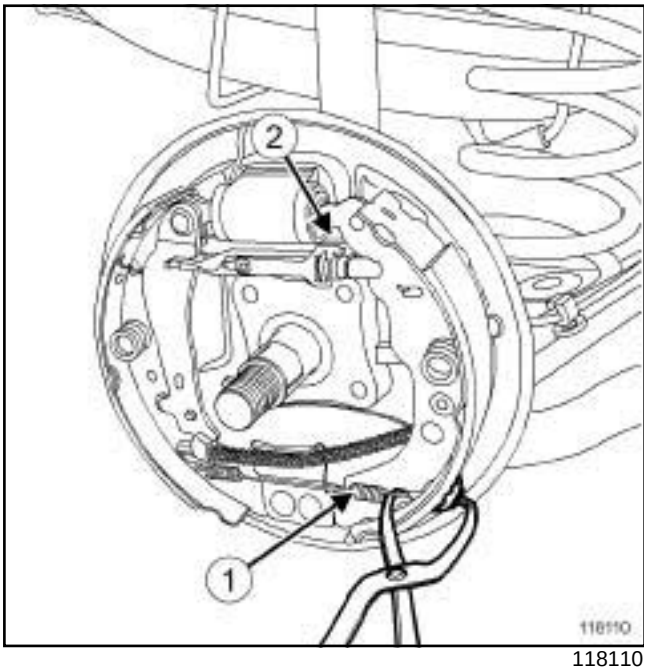

118110

❏ Remove the lower spring (**1**) then the upper spring (**2**) using brake shoe pliers.

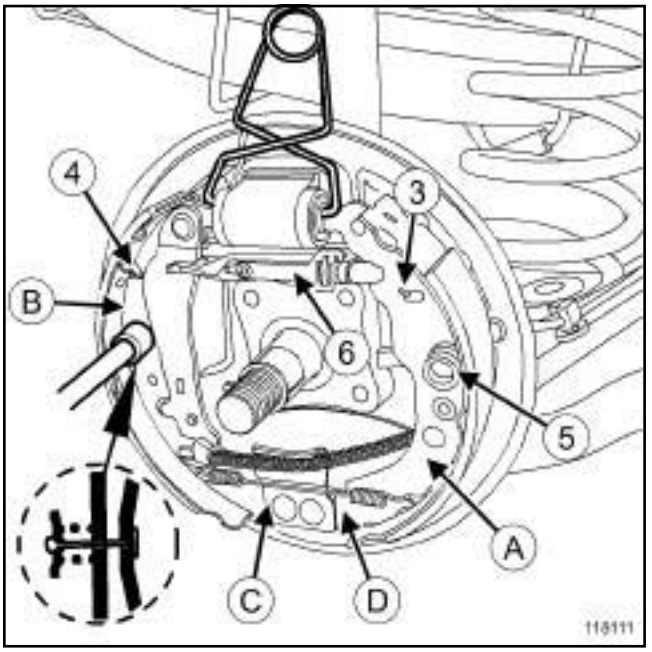

118111

❏ Place pliers on the slave cylinder pistons.

❏ Remove:

- the spring (**3**) on the incremented automatic compensation system,
- the retaining spring (**4**) from the trailing shoe linkage,
- the side retaining springs (**5**) while holding the connecting rod in contact with the brake back-plate,
- the linkage (**6**) .

❏ Alternately remove each shoe base (**D**) from the fixed bridge piece (**C**) .

❏ Remove:

- the leading shoe (**A**) ,
- the trailing shoe (**B**) .

❏ Uncouple the parking brake cable from the parking brake lever.

REFITTING

I - REFITTING PREPARATION OPERATION

❏ Remove any dust from the brake drums and backplates using **BRAKE CLEANER** (see **Vehicle: Parts and consumables for the repair**) (04B, Consumables - Products).

❏ Lightly grease the support linkage thread.

> Note:
>
> The brake mechanism components are different on the left and right-hand sides, so it is important not to confuse them.
>
> On the left-hand brake: the bolt has a right-hand thread.
>
> On the right-hand brake: the bolt has a left-hand thread.

II - REFITTING OPERATION

❏ Refit:

- the linkage to the trailing shoe while holding it together with its spring,
- the incremented automatic compensation system spring to the linkage,
- the parking brake cable to the parking brake lever,
- the leading shoe,
- the incremented automatic compensation system spring to the leading shoe.

❏ Fit the leading shoe/trailing shoe assembly to the back-plate.

❏ Refit:

- the upper spring,
- the lower spring,
- the side retaining springs while holding the connecting rod in contact with the brake back-plate.

❏ Remove the pliers from the slave cylinder pistons.

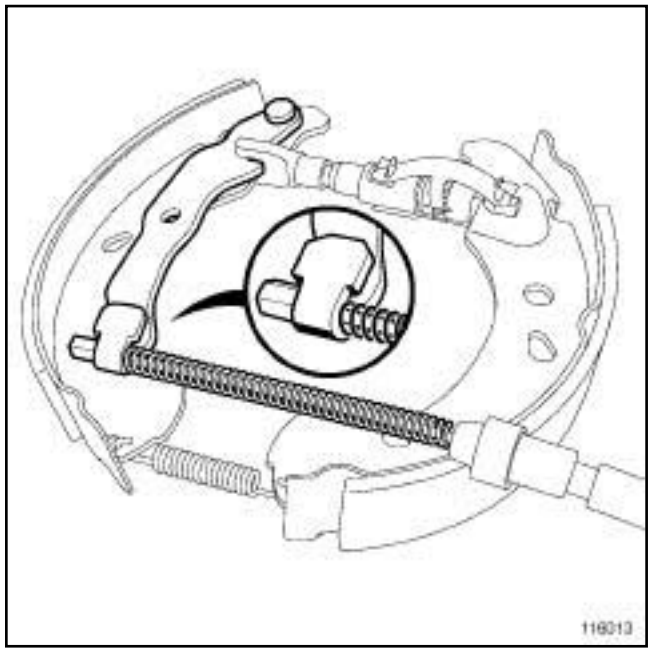

116013

❏ Check that the parking brake cable is correctly positioned on the parking brake lever.

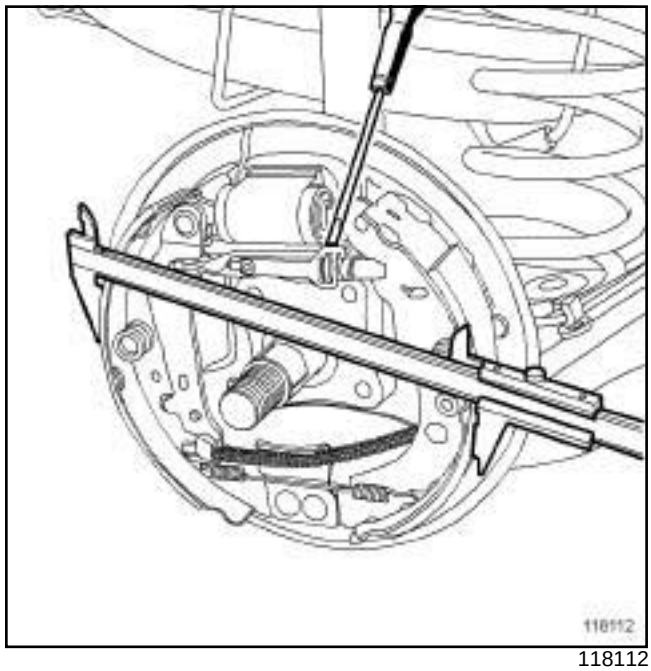

118112

❏ Using a screwdriver, adjust the diameter of the shoes with the linkage to obtain a diameter of **227.5 mm ± 0.1**.

❏ Carry out the same adjustment on the other side.

❏ Adjust the handbrake if the lever stops between the first and second positions of the parking brake lever's travel (see **37A**, **Mechanical component controls**, **Parking brake lever: Adjustment**, page **37A-30**) .

III - FINAL OPERATION

❑ Refit:

- the brake drums (see **33A**, **Rear axle components**, **Rear brake drum: Removal - Refitting**, page **33A-7**) .
- the rear wheels (see **35A**, **Wheels and tyres**, **Wheel: Removal - Refitting**, page **35A-1**) .

❑ Adjust the brake pads by depressing the brake pedal repeatedly.

❑ Check that the incremented compensation system is working properly (characteristic « click » from the drums when the brake pedal is repeatedly depressed).

Equipment required
pedal press
parts washer

Tightening torques ▽	
brake cylinder bolt(s)	**14 N.m**
brake pipe union on the rear brake cylinder	**14 N.m**

IMPORTANT
Consult the safety and cleanliness advice and operation recommendations before carrying out any repair (see **30A**, **General information**, **Brake circuit: Precautions for the repair**, page **30A-2**) .

WARNING
Prepare for the flow of fluid, and protect the surrounding components.

REMOVAL

I - REMOVAL PREPARATION OPERATION

❏ Position the vehicle on a two-post lift (see **Vehicle: Towing and lifting**) .

❏ Position a **pedal press** on the brake pedal to limit the outflow of brake fluid.

❏ Release the parking brake.

❏ Remove:

- the rear wheels (see **35A**, **Wheels and tyres**, **Wheel: Removal - Refitting**, page **35A-1**) ,
- the brake drum (see **33A**, **Rear axle components**, **Rear brake drum: Removal - Refitting**, page **33A-7**) ,
- the side retaining springs while holding the connecting rod in contact with the brake back-plate (see **33A**, **Rear axle components**, **Rear brake lining: Removal - Refitting**, page **33A-2**) ,
- the upper return spring using brake shoe pliers (see **33A**, **Rear axle components**, **Rear brake lining: Removal - Refitting**, page **33A-2**) .

❏ Detach the pin from the spring of the wear compensation system on the leading shoe.

❏ Separate the shoes.

II - REMOVAL OPERATION

❏ Unscrew the rigid pipe union from the slave cylinder (be prepared for brake fluid running out).

❏ Fit a cap on the brake pipe union.

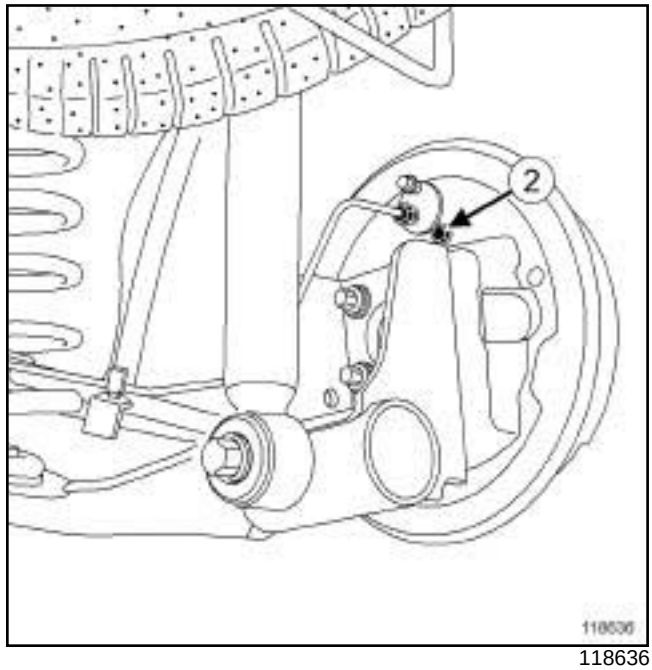

118636

❏ Remove the rear brake cylinder bolt (**2**) on the brake back-plate.

❏ Remove the rear brake cylinder.

REFITTING

I - REFITTING PREPARATION OPERATION

❏ Remove any dust from the brake drums and back-plates using a **parts washer**.

II - REFITTING OPERATION

❏ Refit:

- the rear brake cylinder on the brake back-plate,
- the rear brake cylinder bolt(s) on the brake back-plate.

❏ Torque tighten the **brake cylinder bolt(s) (14 N.m)**.

❏ Remove the plug from the brake pipe union.

❏ Refit the brake pipe union on the rear brake cylinder.

❏ Torque tighten the **brake pipe union on the rear brake cylinder (14 N.m)**.

III - FINAL OPERATION

- ❑ Attach the pin from the spring of the wear compensation system on the leading shoe.
- ❑ Refit:
  - the upper return spring using brake shoe pliers (see **33A**, **Rear axle components**, **Rear brake lining: Removal - Refitting**, page **33A-2**) ,
  - the side retaining springs while holding the connecting rod in contact with the brake back-plate (see **33A**, **Rear axle components**, **Rear brake lining: Removal - Refitting**, page **33A-2**) ,
  - the brake drum (see **33A**, **Rear axle components**, **Rear brake drum: Removal - Refitting**, page **33A-7**) ,
  - the rear wheels (see **35A**, **Wheels and tyres**, **Wheel: Removal - Refitting**, page **35A-1**) ,
  - the **pedal press**.
- ❑ Bleed the brake circuit (see **30A**, **General information**, **Braking circuit: Bleed**, page **30A-4**) .
- ❑ Adjust the rear brake linings by repeatedly depressing the brake pedal.

Equipment required
parts washer

Tightening torques ▽	
rear brake drum nut	**280 N.m**

IMPORTANT
Consult the safety and cleanliness advice and operation recommendations before carrying out any repair (see **30A**, **General information**, **Brake circuit: Precautions for the repair**, page **30A-2**) .

IMPORTANT
The two brake drums should be the same diameter.

Regrinding one drum necessitates regrinding of the opposite drum.

When replacing a brake drum, it is essential to replace the drum on the opposite side as well.

When replacing a brake drum, it is essential to replace the brake linings as well.

REMOVAL

I - REMOVAL PREPARATION OPERATION

❏ Position the vehicle on a two-post lift (see **Vehicle: Towing and lifting**) (02A, Lifting equipment).

❏ Release the parking brake.

❏ Remove the rear wheels (see **35A**, **Wheels and tyres**, **Wheel: Removal - Refitting**, page **35A-1**) .

II - REMOVAL OPERATION

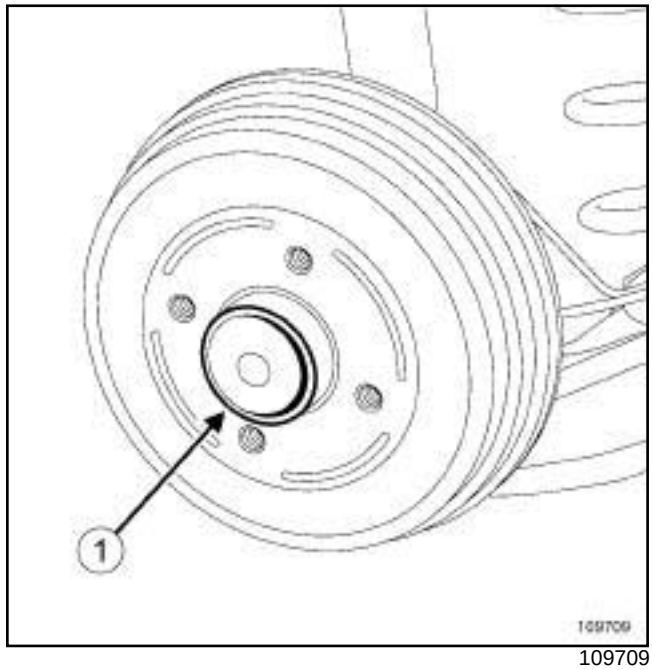

109709

❏ Remove the caps from the drums (**1**) .

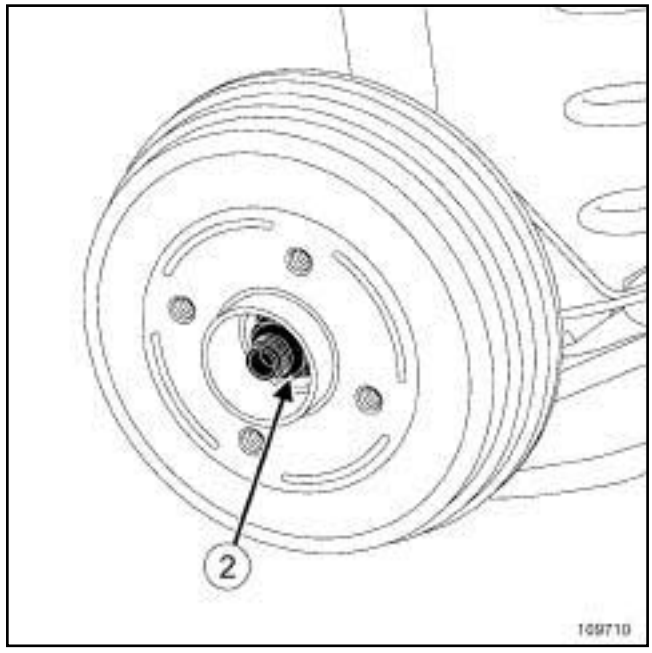

109710

❏ Remove:

- the rear brake drum nuts (**2**) ,
- the rear brake drums using the toolsand, if necessary.

REFITTING

I - REFITTING PREPARATION OPERATION

❏ Check the internal diameter of the drum.

- ❏ Always replace the brake drum nuts.
- ❏ **parts always to be replaced: rear drum cap**.
- ❏ Replace any faulty parts.
- ❏ Using a **parts washer**, clean:
  - the brake drum linings,
  - the drum,
  - the stub axle.

> Note:
>
> Do not apply grease to the following components:
>
> - drum,
> - stub axle,
> - nut,
> - rear drum cap.

II - REFITTING OPERATION

- ❏ Adjust the parking brake if the lever stops between the first and second positions of the parking brake lever's travel (see **37A**, **Mechanical component controls**, **Parking brake lever: Removal - Refitting**, page **37A-29**) .
- ❏ Refit:
  - the rear brake drums,
  - the rear brake drum nuts,
  - the drum caps.
- ❏ Torque tighten the **rear brake drum nut (280 N.m)** by turning the drum while tightening the nut.

III - FINAL OPERATION

- ❏ Refit the rear wheels (see **35A**, **Wheels and tyres**, **Wheel: Removal - Refitting**, page **35A-1**) .
- ❏ Adjust the brake linings by repeatedly depressing the brake pedal.

Equipment required
sliding calliper

I - PREPARATION OPERATION FOR CHECK

Position the vehicle on a two-post lift (see **Vehicle: Towing and lifting**) (02A, Lifting equipment).

Remove:

- the rear wheel (see **35A**, **Wheels and tyres**, **Wheel: Removal - Refitting**, page **35A-1**) ,
- the rear brake drum (see **33A**, **Rear axle components**, **Rear brake drum: Removal - Refitting**, page **33A-7**) .

II - TEST OPERATION

Note:

To check the internal diameter of the drum, use a **sliding calliper** type tool for drums.

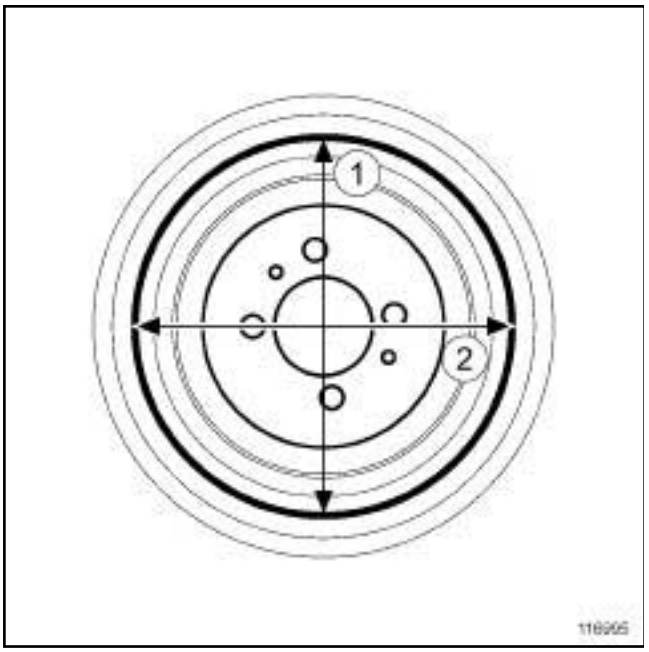

116995

Position the **sliding calliper** to measure the internal diameters of the brake drum.

Measure the interior diameters of the brake drum on the perpendicular axes (**1**) and (**2**) .

Compare the values with those recommended by the manufacturer (see **30A**, **General information**, **Brake: Specifications**, page **30A-13**) .

III - FINAL OPERATION

Replace the rear drums if necessary (see **33A**, **Rear axle components**, **Rear brake drum: Removal - Refitting**, page **33A-7**) .

Refit the rear wheel (see **35A**, **Wheels and tyres**, **Wheel: Removal - Refitting**, page **35A-1**) .

Equipment required
pedal press

Tightening torques ▽	
rigid brake pipe unions on the brake cylinders	**14 N.m**
rigid brake pipe unions on the rear brake hoses	**14 N.m**

The pipes have a rigid and a flexible section.

IMPORTANT
To avoid all risk of damage to the systems, apply the safety and cleanliness instructions and operation recommendations before carrying out any repair (see **33A**, **Rear axle components**, **Rear axle components: Precautions for the repair**, page **33A-1**) .

WARNING
Prepare for the flow of fluid, and protect the surrounding components.

WARNING

To avoid damaging the wheel speed sensor cable:

- Do not tension the cable,
- Do not twist the cable,
- Check that there is no contact with the surrounding components,
- Do not use tools that may damage the cable.

REMOVAL

I - REMOVAL PREPARATION OPERATION

❏ Position the vehicle on a two-post lift (see **Vehicle: Towing and lifting**) (02A, Lifting equipment).

❏ Fit the **pedal press** to the brake pedal to limit the amount of brake fluid running out.

II - REMOVAL OPERATION

1 -Rear left-hand rigid brake pipe

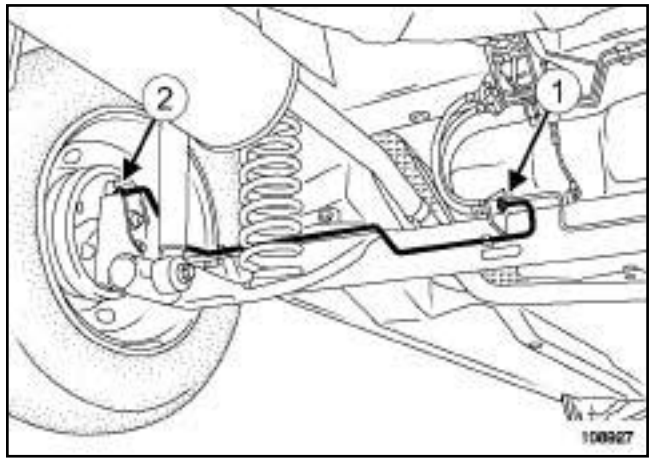

108927

❏ Unscrew:

- the rigid brake pipe union on the rear axle (**1**) ,
- the rigid brake pipe union on the rear brake cylinder (**2**) .

❏ Unclip the rear axle rigid brake pipe.

❏ Remove the rear left-hand rigid brake pipe.

2 - Rear right-hand rigid brake pipe

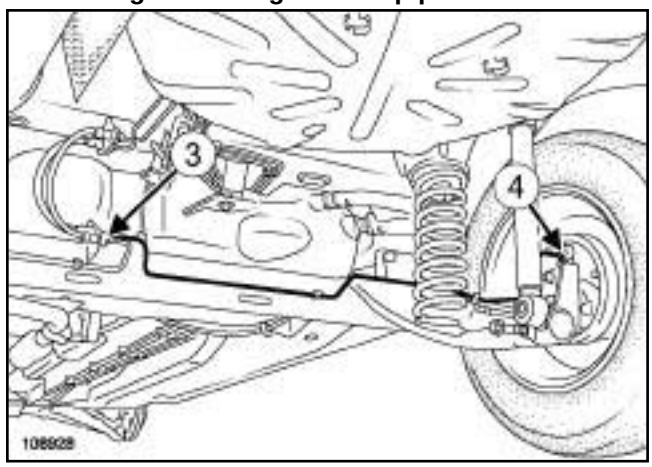

108928

❏ Unscrew:

- the rigid brake pipe union on the rear axle brake hose (**3**) ,
- the rigid brake pipe union on the rear brake cylinder (**4**) .

❏ Unclip the rear axle rigid brake pipe.

❏ Remove the rear right-hand rigid brake pipe.

REFITTING

I - REFITTING PREPARATION OPERATION

❏ Always replace the rigid brake pipe mounting clips.

II - REFITTING OPERATION

❏ Refit the rear rigid brake pipes in their original positions.

❏ Clip the rear rigid brake pipes on the rear axle.

❏ Fit without tightening:

- the rigid brake pipe unions on the brake cylinders,
- the rigid brake pipe unions on the rear brake hoses.

❏ Torque tighten:

- the **rigid brake pipe unions on the brake cylinders (14 N.m)**,
- the **rigid brake pipe unions on the rear brake hoses (14 N.m)**.

III - FINAL OPERATION

❏ Remove the tool **pedal press** from the brake pedal to limit the outflow of brake fluid.

❏ Bleed the brake circuit (see **30A**, **General information**, **Braking circuit: Bleed**, page **30A-4**) .

4X2 TRANSMISSION

Equipment required
component jack

Tightening torques ▽	
shock absorber lower bolt	**162 N.m**
shock absorber upper nut	**14 N.m**

IMPORTANT
To avoid all risk of damage to the systems, apply the safety and cleanliness instructions and operation recommendations before carrying out any repair (see **33A**, **Rear axle components**, **Rear axle components: Precautions for the repair**, page **33A-1**) .

During removal, note the colours of the springs to ensure the conformity of the parts for refitting.

WARNING
To prevent any suspension asymmetry, replace both of the shock absorbers on the same axle.

WARNING
To prevent the components of the rear axle from deteriorating (rubber bushes, brake hoses, etc.) do not remove the two shock absorbers at the same time. Proceed one side at a time.

WARNING
To prevent any damage, do not use the rear axle as support for the lifting system.

REMOVAL

I - REMOVAL PREPARATION OPERATION

❑ Position the vehicle on a two-post lift (see **Vehicle: Towing and lifting**) (02A, Lifting equipment).

❑ Remove the rear wheel arch trim (see) (71A, Body internal trim).

II - REMOVAL OPERATION

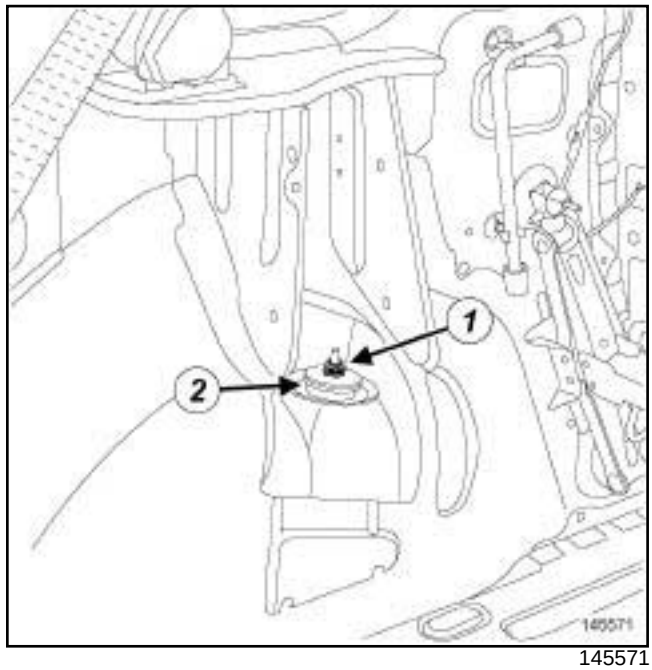

145571

❑ In the luggage compartment, with wheels on the ground, remove:

- the nut (**1**) ,

- the rubber bush (**2**) .

❑ Raise the lift.

❑ Using a block, bring the **component jack** into contact under the rear axle, near the shock absorber.

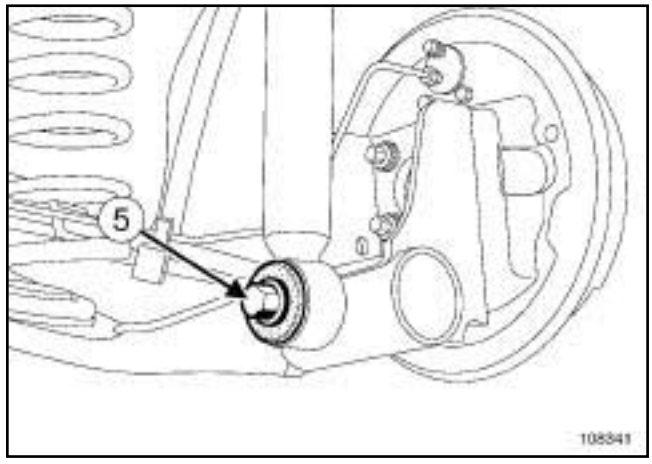

108341

❑ Remove:

- the shock absorber lower bolt (**5**) ,

- the shock absorber.

❑ Repeat the operation on the opposite side.

REFITTING

I - REFITTING PREPARATION OPERATION

❏ Always replace the rear shock absorber lower bolt .

parts always to be replaced: Rear shock absorber upper nut.

II - REFITTING OPERATION

❏ Refit:

- the shock absorber, positioning the shock absorber head in its housing,
- the shock absorber lower bolt.

❏ Lower the lift until the wheels touch the ground.

❏ Align the shock absorber head with the drill hole in the boot.

❏ Refit:

- the rubber bush,
- the new shock absorber upper nut.

❏ Torque tighten:

- the **shock absorber lower bolt (162 N.m)** with the tool **component jack** in place,
- the **shock absorber upper nut (14 N.m)** whilst holding the bolt head, with the wheels on the ground.

❏ Repeat these operations on the shock absorber on the opposite side.

III - FINAL OPERATION

❏ Refit the rear wheel arch trim (see **Rear wheel arch trim: Removal - Refitting**) (71A, Body internal trim).

4X2 TRANSMISSION

Equipment required
component jack

Tightening torques ▽	
shock absorber lower bolt	**162 N.m**

IMPORTANT

To avoid all risk of damage to the systems, apply the safety and cleanliness instructions and operation recommendations before carrying out any repair (see **33A**, **Rear axle components**, **Rear axle components: Precautions for the repair**, page **33A-1**) .

WARNING

To prevent the components of the rear axle from deteriorating (rubber bushes, brake hoses, etc.) do not remove the two shock absorbers at the same time. Proceed one side at a time.

WARNING

To prevent any damage, do not use the rear axle as support for the lifting system.

During removal, note the colours of the springs to ensure the conformity of the parts for refitting.

REMOVAL

I - REMOVAL PREPARATION OPERATION

❑ Position the vehicle on a two-post lift (see **Vehicle: Towing and lifting**) (02A, Lifting equipment).

❑ Remove the rear wheels (see **35A**, **Wheels and tyres**, **Wheel: Removal - Refitting**, page **35A-1**) .

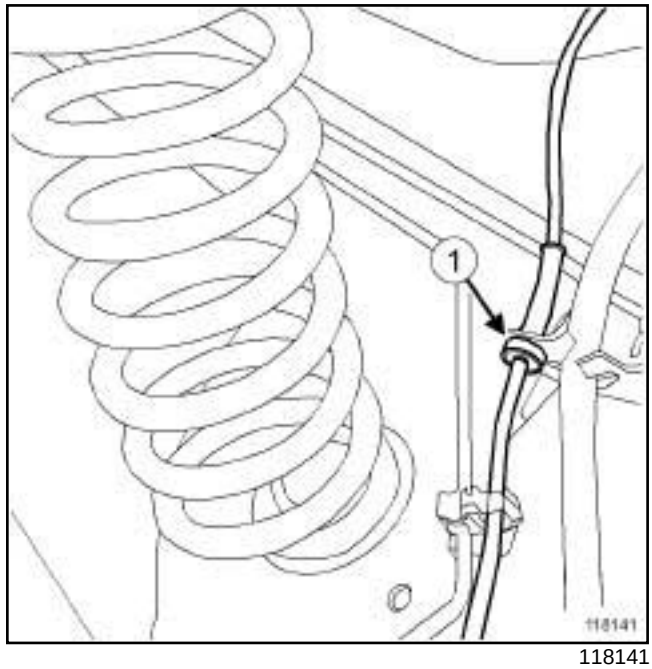

118141

❑ Unclip the wheel speed sensor wiring at (**1**) .

II - REMOVAL OPERATION

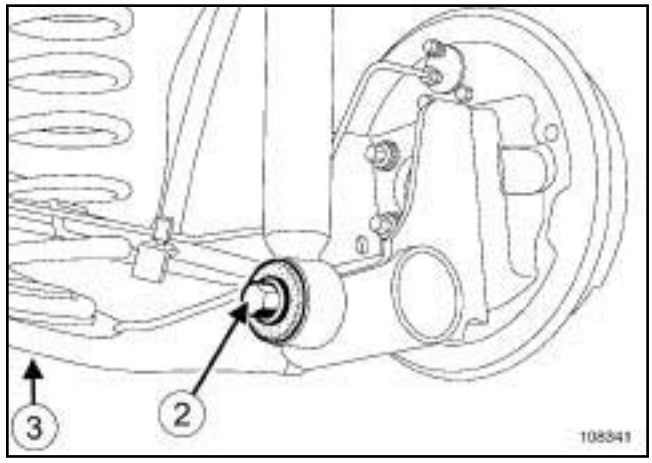

108341

❑ Bring the **component jack** (**3**) into contact, using a shim, under the spring cup, without forcing it.

❑ Mark the position where the spring is fitted.

❑ Remove the lower bolt (**2**) from the shock absorber.

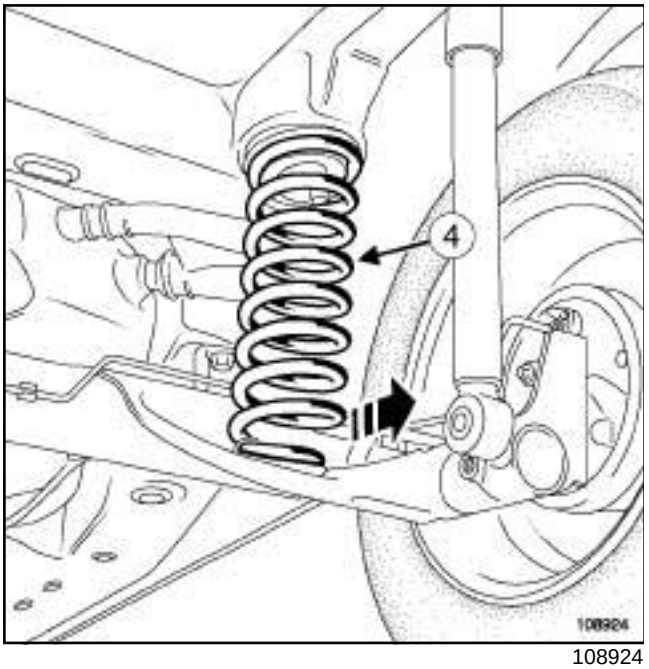

108924

❑ Remove the spring (**4**) with its lower mounting by removing the **component jack**.

> Note:
>
> If the upper mounting is unclipped, replace it.

REFITTING

I - REFITTING PREPARATION OPERATION

❑ Always replace the rear shock absorber lower bolt.

II - REFITTING OPERATION

❑ Refit:

- the lower mounting on the rear axle (positioning the guide correctly),
- the spring with its upper mounting in the marked location, starting at the top.

❑ Bring the **component jack** into contact, using a shim, under the spring cup.

❑ Compress the rear axle so that the shock absorber lower bolt can be refitted.

❑ Refit the shock absorber lower bolt.

❑ Torque tighten the **shock absorber lower bolt (162 N.m)**.

❑ Remove the tool **component jack**.

❑ Refit the wheel speed sensor wiring.

III - FINAL OPERATION

❑ Refit the rear wheel (see **35A**, **Wheels and tyres**, **Wheel: Removal - Refitting**, page **35A-1**) .

❑ Repeat these operations on the opposite side.

IMPORTANT

To avoid all risk of damage to the systems, apply the safety and cleanliness instructions and operation recommendations before carrying out any repair (see **33A**, **Rear axle components**, **Rear axle components: Precautions for the repair**, page **33A-1**) .

REMOVAL

I - REMOVAL PREPARATION OPERATION

❏ Position the vehicle on a two-post lift (see **Vehicle: Towing and lifting**) (02A, Lifting equipment).

❏ Remove:

- the rear wheels (see **35A**, **Wheels and tyres**, **Wheel: Removal - Refitting**, page **35A-1**) .
- the rear brake drums (see **33A**, **Rear axle components**, **Rear brake drum: Removal - Refitting**, page **33A-7**) .
- the complete rear axle (see **33A**, **Rear axle components**, **Complete rear axle system: Removal - Refitting**, page **33A-19**) .

II - REMOVAL OPERATION

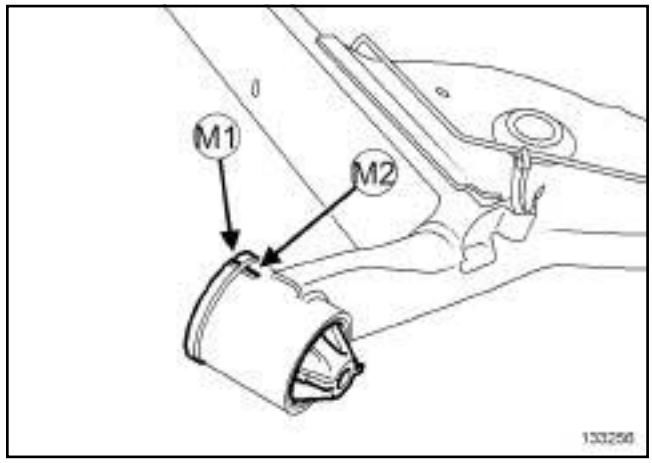

133256

❏ Before removing the rear rubber bearing, mark the position of the rubber bearing in the bore of the rear axle arm bushing:

- make marks (**M1**) and (**M2**) on the rear axle arm bushing and on the rubber bearing,
- copy the mark (**M1**) from the used rubber bearing onto the new one.

Note:

These marks are necessary to ensure correct refitting, and to avoid premature wear of the rubber bearings and good road holding for the vehicle.

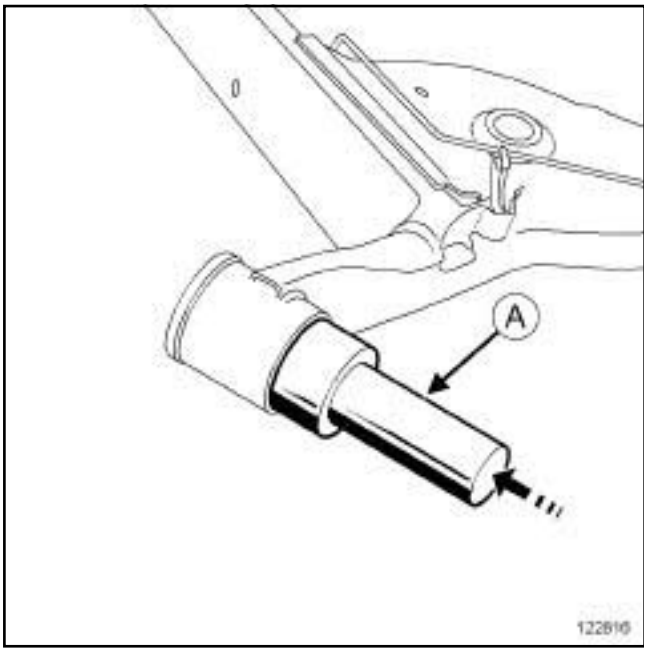

122816

❑ Fit the joint castor (**A**) of the.

❑ Remove the rubber bearing from the rear axle by hitting with a hammer on the bush castor (**A**) of the tool.

REFITTING

I - REFITTING PREPARATION OPERATION

❑ **parts always to be replaced: Rear axle rubber bearing**.

II - REFITTING OPERATION

❑ Position the rubber bearing in the bore of the rear axle arm bushing so that the marks ***(M1)*** and ***(M2)*** are aligned.

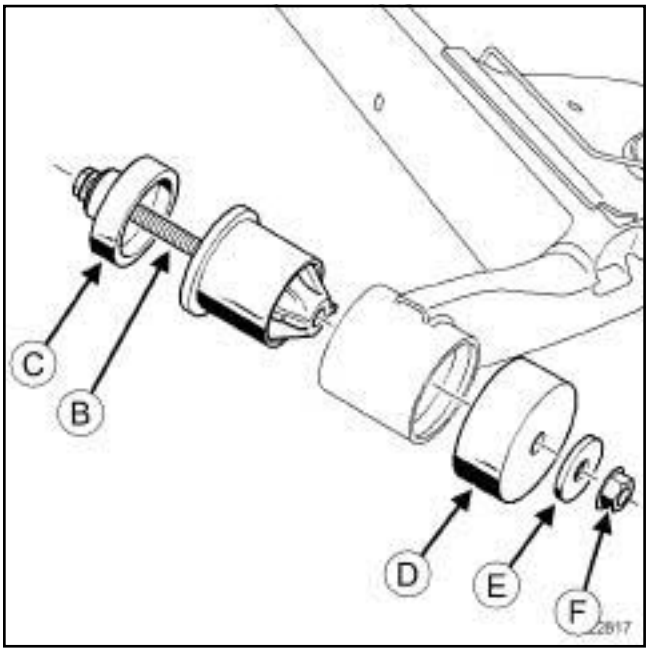

122817

❑ To refit the rear axle rubber bearings use:

- the threaded rod (**B**) ,
- the cover (**C**) ,
- the cover (**D**) ,
- the anti-friction washer (**E**) ,
- the nut (**F**) , of the

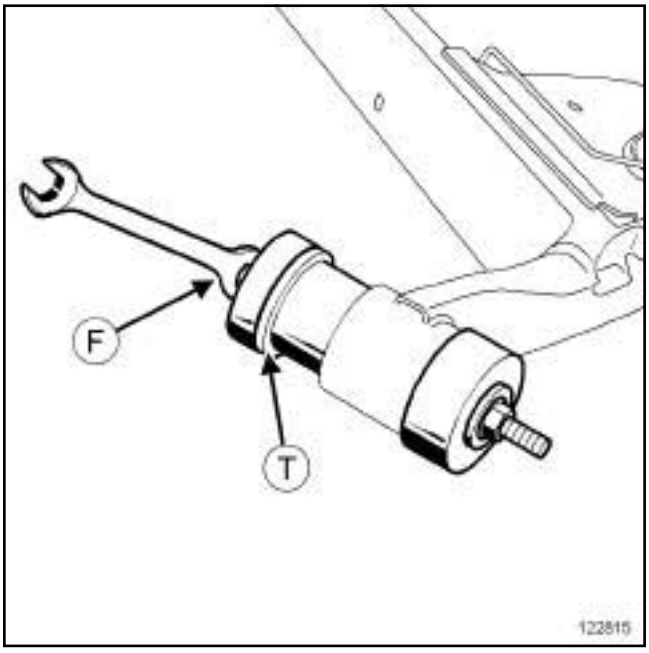

122815

❑ Position theused for refitting.

❑ Tighten the nut ***(F)*** of the tooluntil the rubber bearing face ***(T)*** is set right up against the rear axle arm bushing.

- ❑ Check that the marks ***(M1)*** and ***(M2)*** are correctly aligned.
- ❑ Remove the tool.

III - FINAL OPERATION

- ❑ Refit:
  - the complete rear axle (see **33A**, **Rear axle components**, **Complete rear axle system: Removal - Refitting**, page **33A-19**) ,
  - the rear brake drums (see **33A**, **Rear axle components**, **Rear brake drum: Removal - Refitting**, page **33A-7**) .
- ❑ Adjust the rear axle (see **Rear axle system: Adjustment**) .
- ❑ Refit the rear wheels (see **35A**, **Wheels and tyres**, **Wheel: Removal - Refitting**, page **35A-1**) .
- ❑ Bleed the brake circuit (see **30A**, **General information**, **Braking circuit: Bleed**, page **30A-4**) .

4X2 TRANSMISSION

Equipment required
pedal press
component jack
safety strap(s)

Tightening torques ▽	
bearing bolts	**105 N.m**
rigid pipe unions on the brake cylinders	**14 N.m**
rigid pipe unions on the hoses	**14 N.m**

IMPORTANT

To avoid all risk of damage to the systems, apply the safety and cleanliness instructions and operation recommendations before carrying out any repair (see **33A**, **Rear axle components**, **Rear axle components: Precautions for the repair**, page **33A-1**) .

WARNING

Prepare for the flow of fluid, and protect the surrounding components.

REMOVAL

I - REMOVAL PREPARATION OPERATION

❑ Release the parking brake.

❑ Position the vehicle on a two-post lift (see **Vehicle: Towing and lifting**) (02A, Lifting equipment.

❑ Remove the rear wheels (see **35A**, **Wheels and tyres**, **Wheel: Removal - Refitting**, page **35A-1**) .

❑ Fit the **pedal press** to the brake pedal to limit the outflow of brake fluid.

II - REMOVAL OPERATION

❑ Remove the brake drums (see **33A**, **Rear axle components**, **Rear brake drum: Removal - Refitting**, page **33A-7**) .

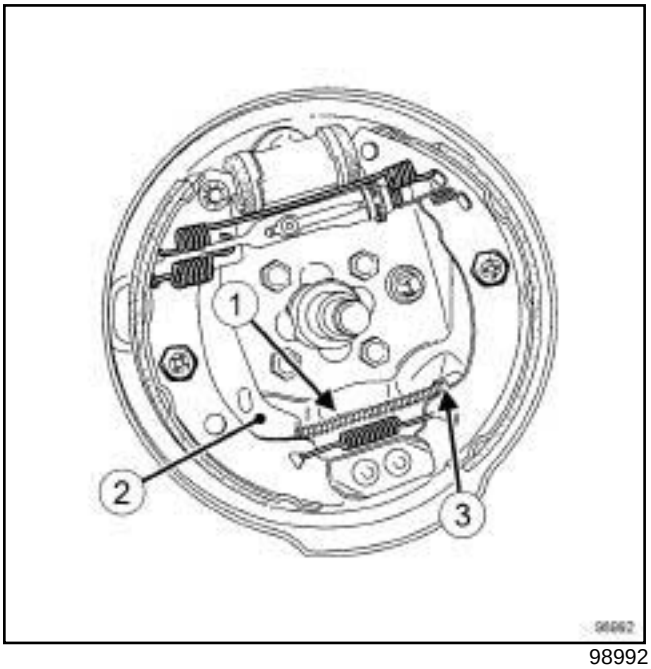

98992

❑ Take out the parking brake cables (**1**) by pushing the lever (**2**) using pliers and a screwdriver.

❑ Unclip:

- the parking brake cable sleeves (**3**) from the brake back-plates,
- the wheel speed sensors (if fitted to the vehicle).

❑ Detach the rear axle wheel speed sensors (if fitted to the vehicle).

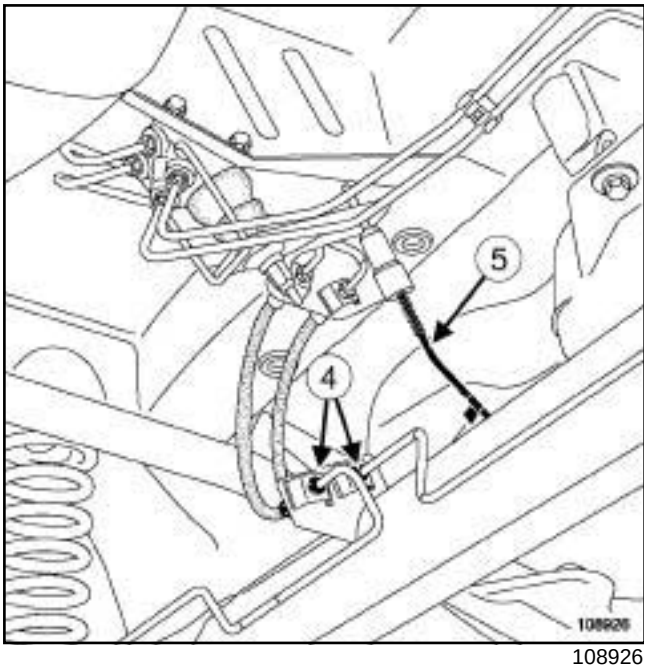

108926

- Unscrew the unions of the rigid pipes on the flexible brake pipes (**4**) .
- Detach the compensator rod (**5**) from the rear axle (if fitted to vehicle).
- Remove the rear suspension springs (see **33A**, **Rear axle components**, **Rear suspension spring: Removal - Refitting**, page **33A-14**) .
- Undo the rigid brake pipe unions on the brake cylinders.

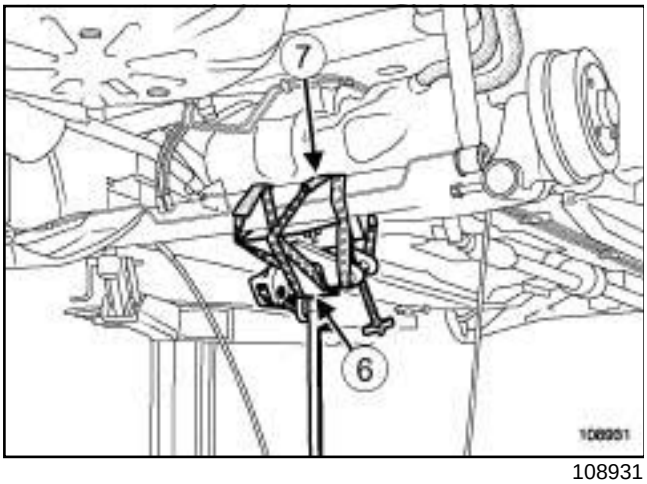

108931

- Place the **component jack** (**6**) at the centre of the rear axle.
- Lash the rear axle to the **component jack** using a **safety strap(s)** (**7**) .

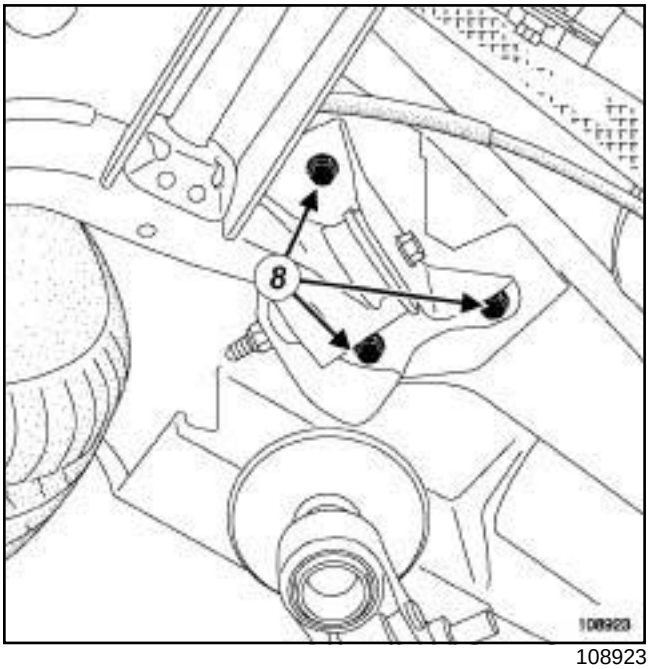

108923

- Loosen the bearing bolts (**8**) .
- Lower the rear axle with the **component jack**.
- Remove:
  - the rear axle from the **component jack**,
  - the rear axle equipment.

REFITTING

I - REFITTING PREPARATION OPERATION

- Always replace the bolts of the rubber bearings.

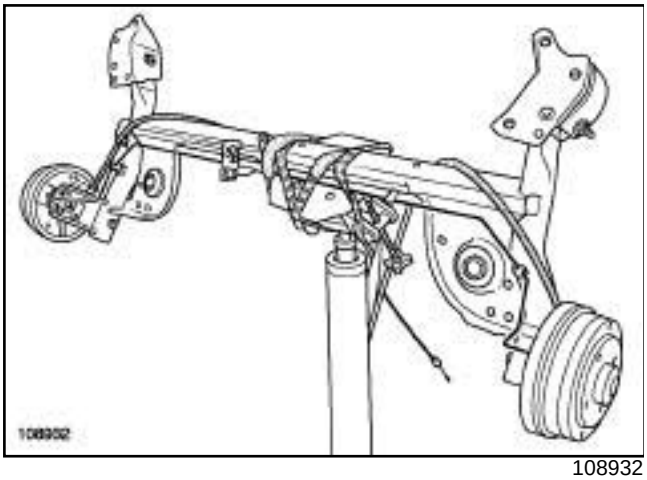

108932

- ❑ Strap the rear axle onto the **component jack**.
- ❑ Position the rear axle under the vehicle.
- ❑ Coat the threads of the bearing bolts with **HIGH STRENGTH THREADLOCK** (see **Vehicle: Parts and consumables for the repair**) (04B, Consumables - Products).

II - REFITTING OPERATION

- ❑ Position the bearing locators opposite the centring holes.
- ❑ Refit the bolts starting with the left-hand bearing.
- ❑ Insert the brake pipes into their housing.
- ❑ Attach the compensator rod (**5**) to the rear axle (if fitted to the vehicle).
- ❑ Retighten the rigid brake pipe unions on the hoses.
- ❑ Remove the **safety strap(s)** and the **component jack**.
- ❑ Refit the brake back-plates.
- ❑ Torque tighten the **bearing bolts (105 N.m)**.
- ❑ Torque tighten:
  - the **rigid pipe unions on the brake cylinders (14 N.m)**,
  - the **rigid pipe unions on the hoses (14 N.m)**.
- ❑ Refit:
  - the rear suspension springs (see **33A**, **Rear axle components**, **Rear suspension spring: Removal - Refitting**, page **33A-14**) ,
  - the parking brake cables.
- ❑ Check that the parking brake cable stops are properly inserted in their housing.
- ❑ Refit the brake drums (see **33A**, **Rear axle components**, **Rear brake drum: Removal - Refitting**, page **33A-7**) .
- ❑ Refit the cables and the wheel speed sensors (if fitted to the vehicle).
- ❑ Connect the parking brake control unit cables to the compensator.
- ❑ Adjust the rear axle (see **Rear axle system: Adjustment**) .

III - FINAL OPERATION

- ❑ Refit the rear wheels (see **35A**, **Wheels and tyres**, **Wheel: Removal - Refitting**, page **35A-1**) .
- ❑ Remove the **pedal press**.
- ❑ Bleed the brake circuit (see **30A**, **General information**, **Braking circuit: Bleed**, page **30A-4**) .

The removal - refitting procedure is the same for all wheels.

REMOVAL

I - REMOVAL PREPARATION OPERATION

❑ Position the vehicle on a two-post lift (see **Vehicle: Towing and lifting**) (02A, Lifting equipment).

❑ Release the parking brake.

❑ Remove the trim.

❑ Position the wheel so that the valve is at the top.

❑ Mark the position of the wheel on the hub.

> Note:
>
> This mark is required in order to:
>
> - Note the original position of the wheel on the hub,
> - perform the balancing operation.

II - OPERATION FOR REMOVAL OF PART CONCERNED

❑ Loosen the wheel bolts with the wheel on the ground.

> Note:
>
> Use sockets with protective sheaths in order to avoid scratching the alloy wheel rims.

❑ Raise the lift.

❑ Remove:

- the wheel bolts,
- the wheel.

If the wheel cannot be removed after the bolt has been undone:

❑ Position all the wheel bolts.

❑ Tighten the wheel bolts to bring all the bolt heads into contact with the wheel.

❑ Undo the wheel bolts by one turn.

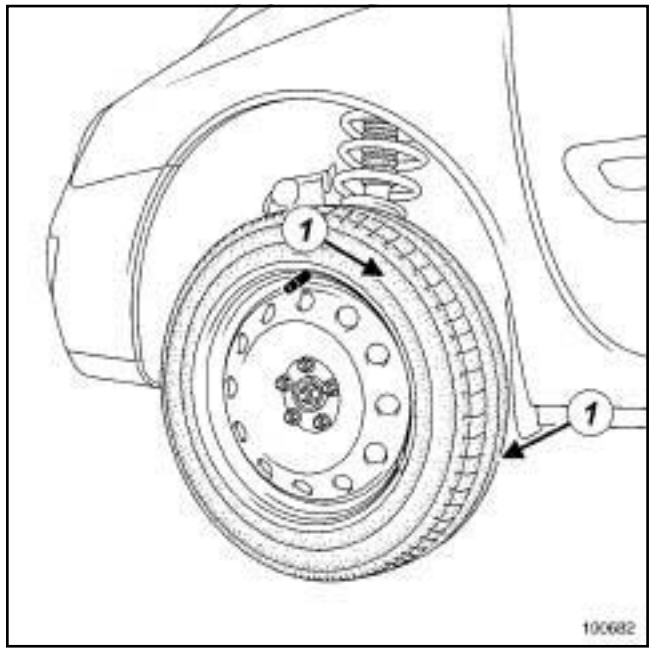

100682

❑ Strike around the edge of the tyre walls (**1**) several times using a mallet on the inner and outer surfaces of the wheel to detach the wheel.

❑ Remove:

- the wheel bolts,
- the wheel.

If this procedure does not work:

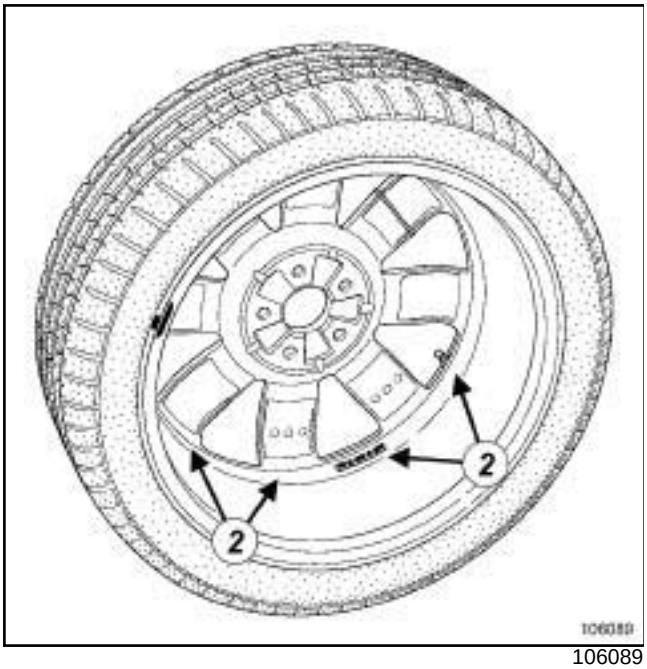

106089

❑ Strike the inner surface of the wheel (**2**) using a mallet and a wooden block to detach it.

> Note:
>
> Do not strike the surface of the wheel using excessive force as this may damage it.

❑ Remove:

- the wheel bolts,
- the wheel.

REFITTING

I - REFITTING PREPARATION OPERATION

❑ Clean the hub carrier using a wire brush.

> Note:
>
> there are two types of wheel bolts for alloy and steel wheel rims; do not swap them.

❑ Check the condition of the tyre.

❑ Do not move or remove the balance weights.

II - REFITTING OPERATION FOR PART CONCERNED

❑ Clean the mating surfaces between the wheel and the hub carrier using a wire brush.

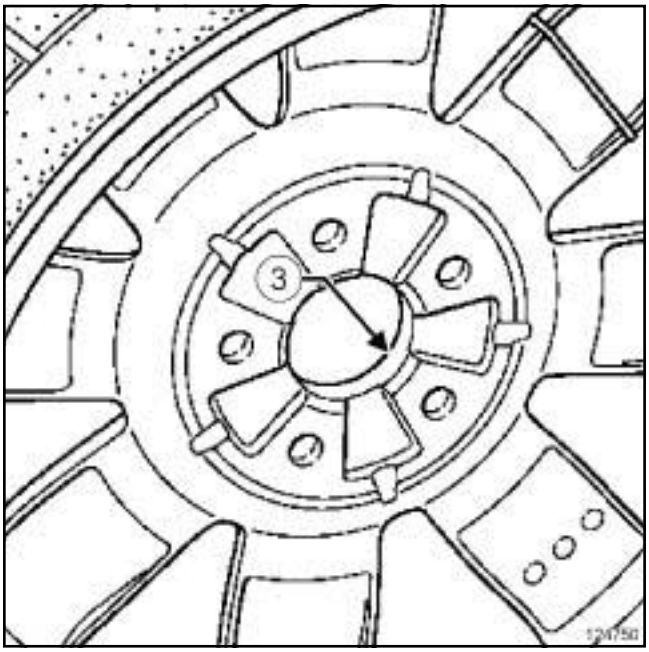

124750

❑ Coat the wheel-mating face (**3**) with **COPPER ANTI-SEIZE AGENT** (see **Vehicle: Parts and consumables for the repair**) (04B, Consumables - Products).

❑ Align the mark on the wheel with the mark made on the hub when it was removed.

❑ Fit the wheel to the vehicle, positioning the valve at the top.

❑ Insert the wheel bolts.

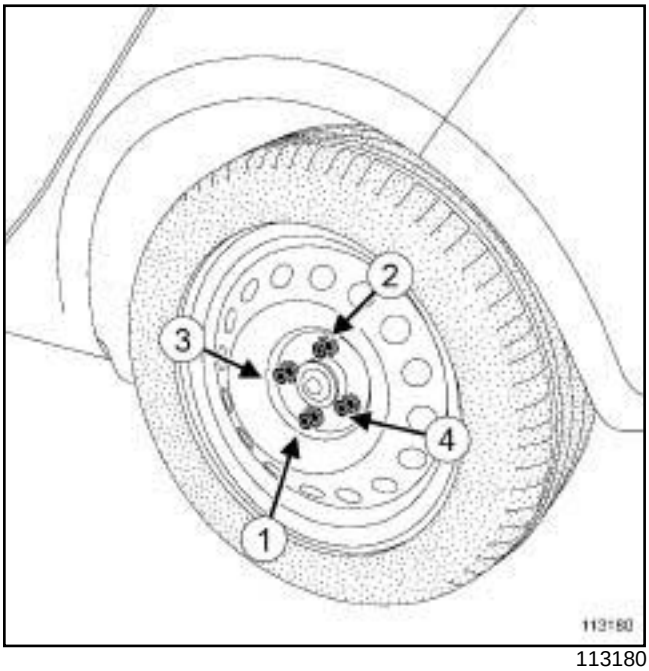

113180

❑ Tighten the wheel bolts to bring all the bolt heads into contact with the wheel.

- Pretighten the wheel bolts to **30 N.m**, with the wheel suspended, starting with the bolts at the bottom.
- Rotate the wheel through **180°** to bring the valve into the bottom position.
- Position the vehicle on its wheels.

> Note:
>
> Use sockets with protective sheaths in order to avoid scratching the alloy wheel rims.

- Torque tighten the wheel bolts in order (see **30A**, **General information**, **Front axle system: Tightening torque**, page **30A-16**) (30A, General information).
- Refit the trim piece.

I - PREREQUISITES FOR WHEEL BALANCING

❑ Wheel balancing is a measurement operation.

Several conditions must be met to achieve a reliable result in a single operation.

The wheel balancer must be installed in accordance with the manufacturer's instructions.

It is essential to calibrate the balancer according to the frequency recommended by the manufacturer.

Do not grease the threaded shaft.

Check the condition of the supports, centring components and mountings.

Replace any faulty parts (see manufacturer's instructions).

The wheel and the wheel balancer must be clean.

Driver's perception

❑ If the wheels are not correctly balanced this causes the steering wheel and/or the vehicle floor to vibrate.

These vibrations appear between **54 mph (90 km/h)** and **90 mph (150 km/h)**.

II - BALANCING PREPARATION OPERATION

❑ Adjust the tyre pressure (see **Tyre pressure: Identification**) .

❑ Always carry out a road test for a minimum distance of **1 mile (2 km)** before balancing the wheels, in order to remove any flat spots on the tread caused by the vehicle being immobilised.

❑ Actions to be carried out immediately after the test drive:

- Position the vehicle on a two-post vehicle lift (see **Vehicle: Towing and lifting**) ,
- raise the vehicle,
- leave the four wheels hanging free,
- release the parking brake.

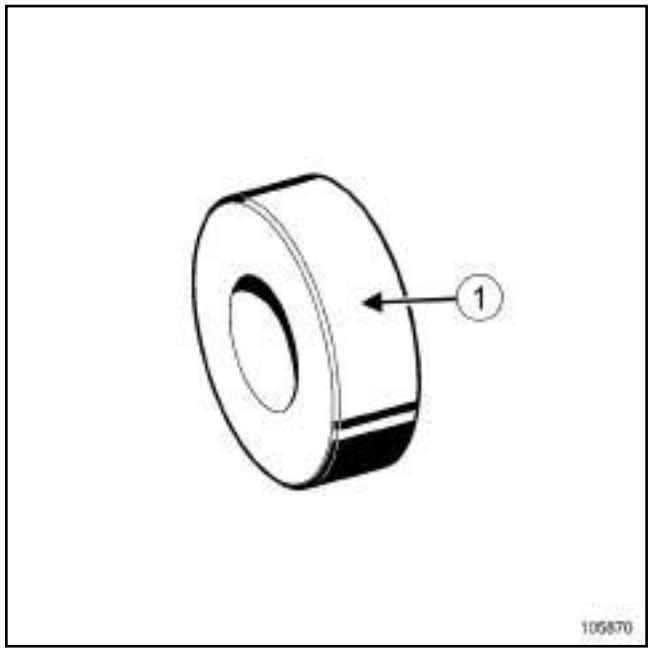

105870

❑

> Note:
>
> The ring is available from the supplier of the equipment used.

To reproduce the exact vehicle wheel assembly, use a ring (**1**) of diameter:

❑ **66 mm**

❑ There are three types of weight:

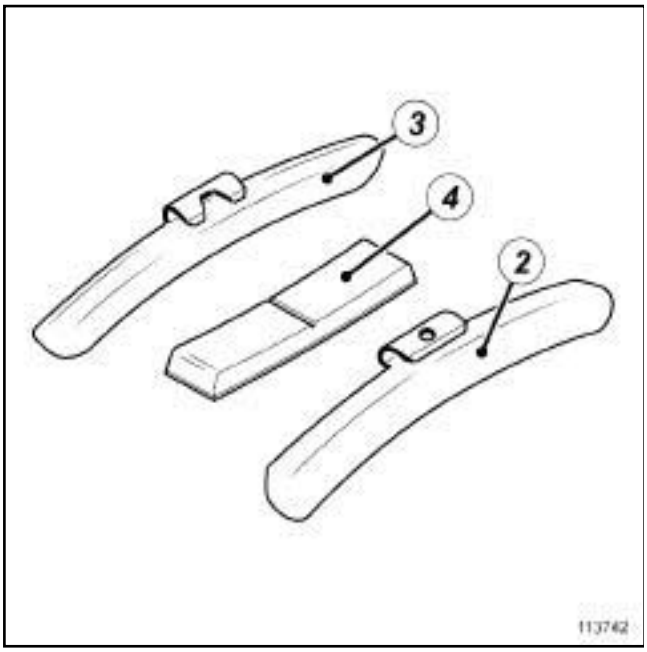

113742

(**2**) Steel wheel with flange

(**3**) Alloy wheel with flange

(**4**) Alloy wheel without flange

❑ In some countries, the use of lead weights is forbidden; in this case it is recommended to use **ZAMAK** weights instead.

Only use weights provided by the Parts Department.

❑ Remove the wheels (see **35A**, **Wheels and tyres**, **Wheel: Removal - Refitting**, page **35A-1**) .

❑ Always clean the wheel, disc, and hub bearing surfaces.

III - PROCEDURE FOR BALANCING THE WHEEL IN QUESTION

❑ Make sure that the wheel balancer bearing surface and all the centring equipment (ring, thrust plate, etc.) are kept clean.

❑ Try not to scratch the (alloy) wheel rim with the wheel tightening device.

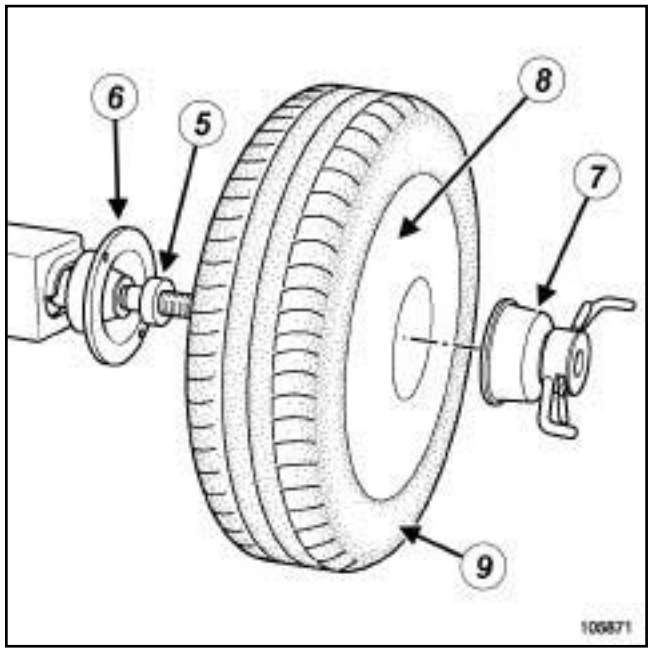

105871

❑ The wheel is fitted on the wheel balancer as follows:

- (**5**) ring,
- (**6**) wheel balancer back-plate,
- (**7**) wheel tightening device (certain alloy wheels require a device 200 mm in diameter to ensure that the wheel has been correctly tightened),
- (**8**) outer wheel plane,
- (**9**) wheel.

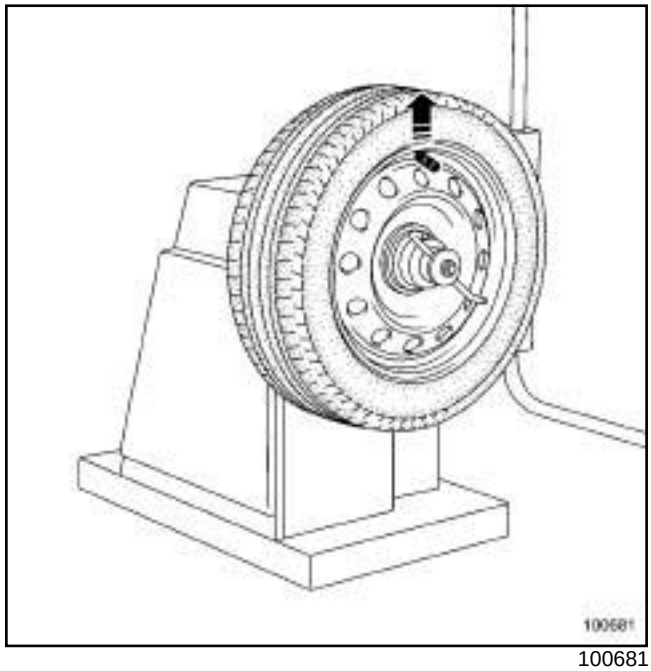

100681

❑ Place the wheel on the wheel balancer, with the valve at the top, then lock the wheel in place.

❑ Remove any stones trapped in the tyre tread.

- ❑ Enter the specific wheel parameters when starting the wheel balancer.
- ❑ Start the wheel balancer and check the wheel balance, which should be **0 g** on each plane of the wheel.
- ❑ If this is not the case, remove the old wheel balancing weights and repeat the wheel balancing procedure, checking that the wheel balance equals **0** on each wheel plane.

> **WARNING**
> To avoid detachment of the balance weights, use only weights which correspond to the vehicle wheel rims.

IV - FINAL OPERATION

- ❑ Refit the wheel (see **35A**, **Wheels and tyres**, **Wheel: Removal - Refitting**, page **35A-1**) .

I - CLEANLINESS

Clean:

- the tyre bead,
- the tyre bead/wheel rim contact surface.

Remove any grit trapped in the tyre treads.

Clean the bearing surfaces on:

- the wheels,
- the discs,
- the hubs.

II - GENERAL RECOMMENDATIONS

WARNING
If checking the pressure when hot, increase the tyre inflation pressure by **0.2** to **0.3** bar above the recommended pressure.

WARNING
In order to remove any flat spots on the tread after the vehicle has stopped, it is essential to carry out a road test for a minimum distance of **1 mile (2 km)** before balancing the wheels.

WARNING
To avoid detachment of the balance weights, use only weights which correspond to the vehicle wheel rims

Example of a tyre identification mark: **205/65 R 15 91 V**.

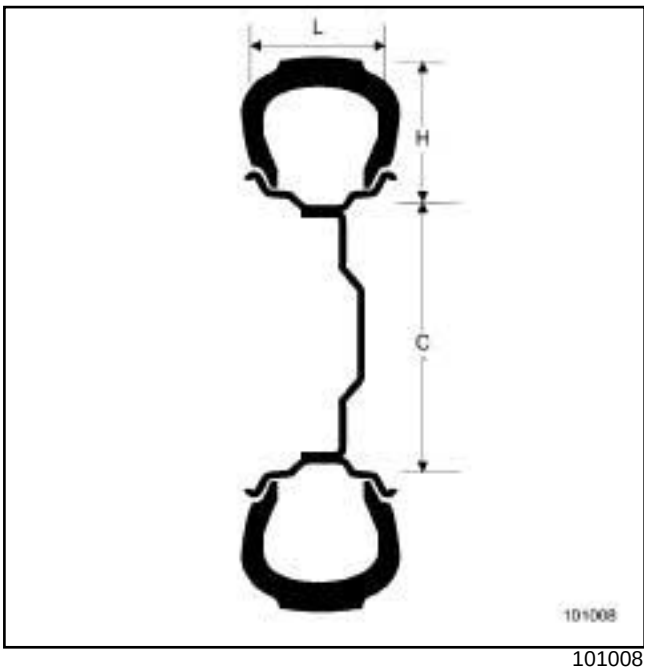

101008

123448

205	Tyre width in mm (L)
65	Height/width ratio
R	Radial structure
15	Internal diameter in inches (c)
91	Load index
V	Speed code

Speed code table:

Code	Maximum speed in mph (km/h)
R	**170**
S	**180**
T	**190**
U	**200**
H	**210**
V	**240**
ZR	above **240**
W	**270**
Y	**300**

REMOVAL

I - REMOVAL PREPARATION OPERATION

❑ Position the vehicle on a two-post lift (see **Vehicle: Towing and lifting**) (02A, Lifting equipment).

❑ Remove:

- the wheel in question (see **35A**, **Wheels and tyres**, **Wheel: Removal - Refitting**, page **35A-1**) ,
- the balance weights,
- the valve mechanism.

II - OPERATION FOR REMOVAL OF PART CONCERNED

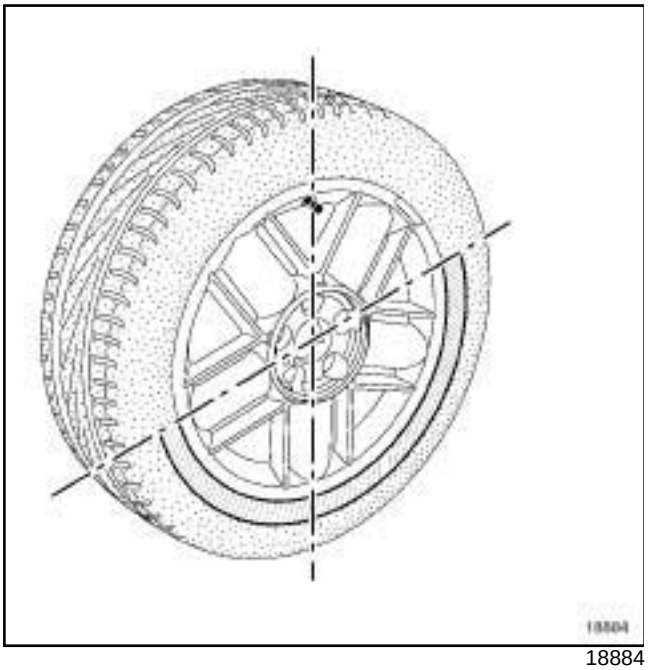

18884

❑ Detach:

- the bead from the outside of the tyre, starting with the side opposite the valve,
- the bead from the inside of the tyre.

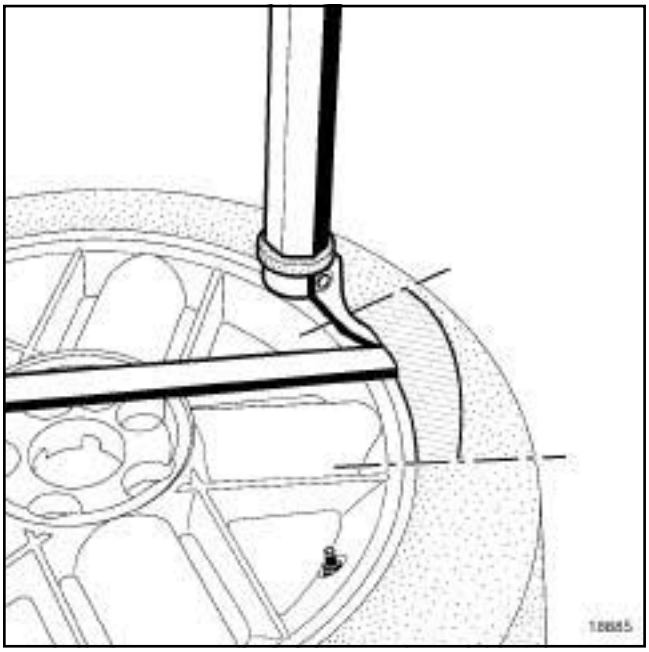

18885

❑ Position the tyre lever approximately **15 cm** from the valve on the outside of the wheel rim in order to remove the exterior bead from the tyre.

❑ Remove the exterior bead of the tyre, finishing at the valve.

❑ Position the tyre lever approximately **15 cm** from the valve on the outside of the wheel rim in order to remove the bead from inside the tyre.

❑ Remove the interior bead of the tyre, finishing at the valve.

REFITTING

I - REFITTING PREPARATION OPERATION

❑ Lubricate the two tyre beads correctly using the **TYRE PASTE** (see **Vehicle: Parts and consumables for the repair**) (04B, Consumables - Products).

II - REFITTING OPERATION FOR PART CONCERNED

❑ Engage the lower tyre bead approximately **15 cm** after the valve.

❑ Finish fitting the tyre at the valve.

❑ Fit the exterior bead approximately **15 cm** after the valve using the tyre lever.

❑ Inflate the tyre to **3.5 bar** to press the tyre beads against the wheel rim.

III - FINAL OPERATION

- ❑ Refit the valve mechanism.
- ❑ Inflate the tyre to the recommended pressure (see **Tyre pressure: Identification**) .

> Note:
>
> It is not necessary to drive the vehicle before and after a new wheel is balanced.

- ❑ Balance the wheel (see **35A**, **Wheels and tyres**, **Wheel: Balancing**, page **35A-4**) .
- ❑ Refit the wheel in question (see **35A**, **Wheels and tyres**, **Wheel: Removal - Refitting**, page **35A-1**) .

Perforation

There are two types of perforation:

- single perforation: perforation caused by nail etc. not requiring a reinforced tyre boot and which can be repaired when the tyres are cold,
- damage: rubber detachment etc. requiring repair and reinforcement of damaged plies.

This repair method only covers single perforations.

Tyre areas

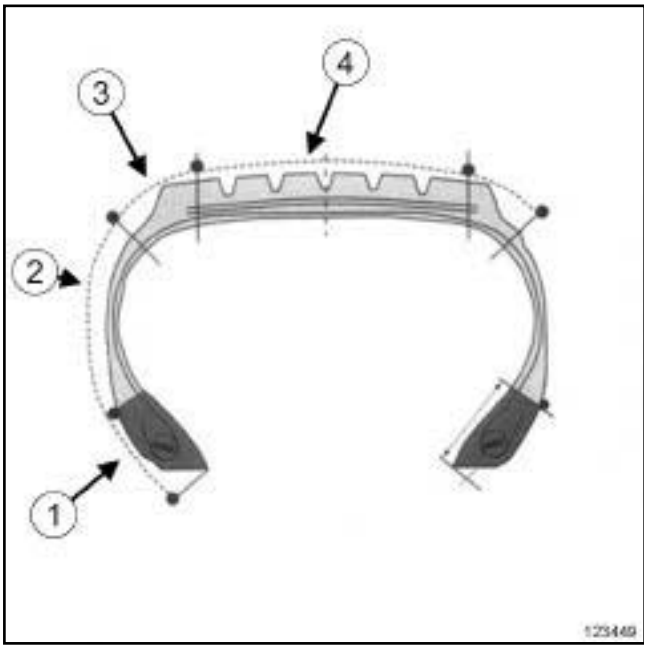

123449

Areas which cannot be repaired:

- tyre bead (**1**) ,
- shoulder (**3**) .

Areas which can be repaired:

- sidewall (**2**) ,
- crown (**4**) .

Perforation table *

	Area	
	Crown: max Ø in mm	**Sidewall: max Ø in mm**
LV speed rating less than or equal to T	6	3
LV speed rating greater than or equal to H	6	0
LCV load index less than or equal to 121	6	3
HGV load index 122 to 177 (inc.)	10	3

LV: Light Vehicle

LCV: Light Commercial Vehicle

HGV: Heavy Goods Vehicle

***** If the diameter of the puncture is greater than these figures, replace the tyre.

The tyre cannot be repaired if:

- a compulsory marking has been worn away (see **35A**, **Wheels and tyres**, **Tyres: Identification**, page **35A-8**) ,
- the interior of the tyre shows signs of under-inflation or overloading,
- the rubber shows signs of chemical damage (hydrocarbons and other corrosive substances),
- incorrect and irreversible repairs have previously been made to the tyre,
- the carcass has been damaged,
- cuts or circumferential wear (cracks) are visible on the interior or exterior of the tyre,
- the tyre bead has been damaged (ply visible),
- the tyre's bead wires are visible, damaged or deformed,
- the tyre shows an irregular wear pattern which may impair vehicle handling,
- the repair requires two tyre boots to be overlapped,
- the manufacturer has expressly prohibited any repairs, in writing,
- there is damage to the shoulder area (junction between the sidewall and the crown),
- the angle of the perforation channel (hole) is greater than 15°.

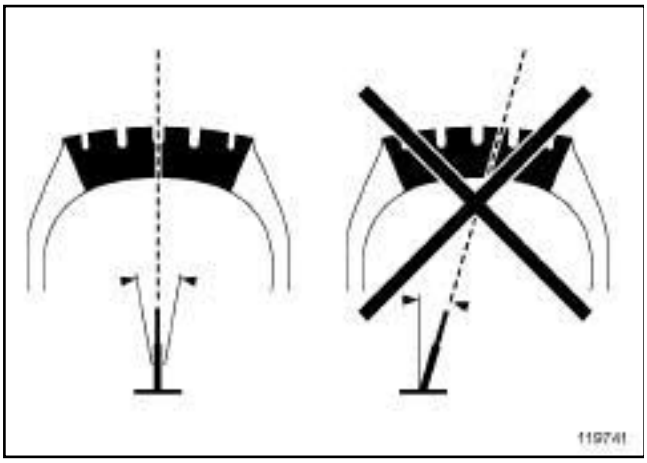

119741

Tyre inflation kit

using the tyre inflation kit, supplied with vehicles or available from retailers, will leave a film on the inner surface of the tyre.

Before carrying out the repair, clean the inner surface of the tyre and the valve with water.

If the tyre cannot be cleaned in this way, contact the tyre supplier for details of cleaning products which can be used.

REPAIR

I - REPAIR PREPARATION OPERATION

❏ Position the vehicle on a two-post lift (see **Vehicle: Towing and lifting**) (02A, Lifting equipment).

❏ Remove the wheel (see **35A**, **Wheels and tyres**, **Wheel: Removal - Refitting**, page **35A-1**) .

❏ Inflate the tyre.

❏ Locate the perforation on the exterior of the tyre and mark it with chalk.

❏ Remove the tyre.

❏ Locate the perforation on the interior of the tyre and mark it with chalk.

❏ Remove the foreign body which caused the puncture.

❏ Determine the direction of the perforation channel.

❏ Determine the size of the hole:

- measure the size of the foreign body,
- measure the extent of the damage to the tyre.

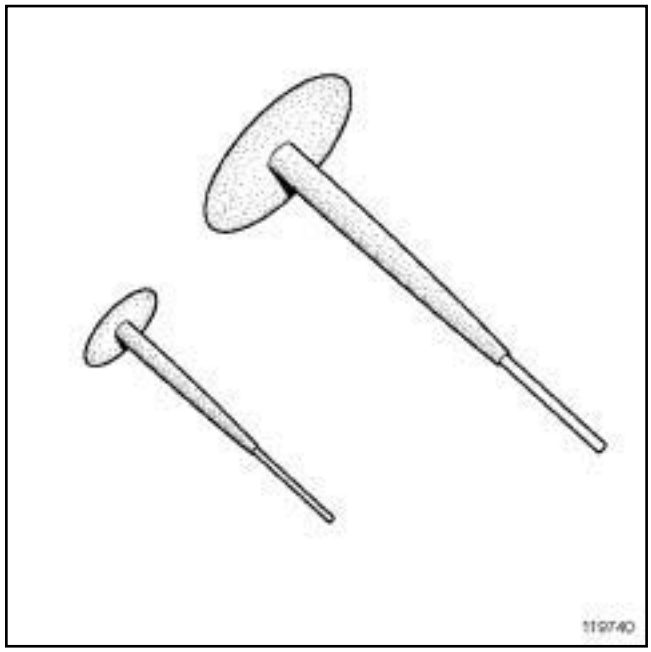

119740

❏ Choose the size of plug (mushroom type plug) depending on the size of the hole.

II - REPAIR OPERATION

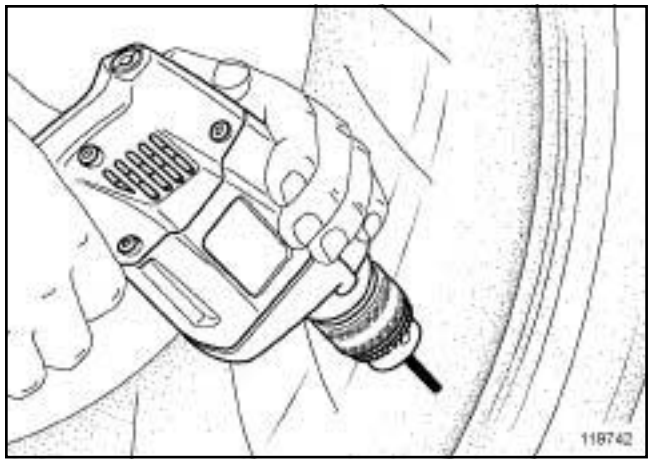

119742

❏ Use a drill fitted with a suitable bit, perpendicular to the surface of the tyre, to bore the interior then the exterior of the perforation channel.

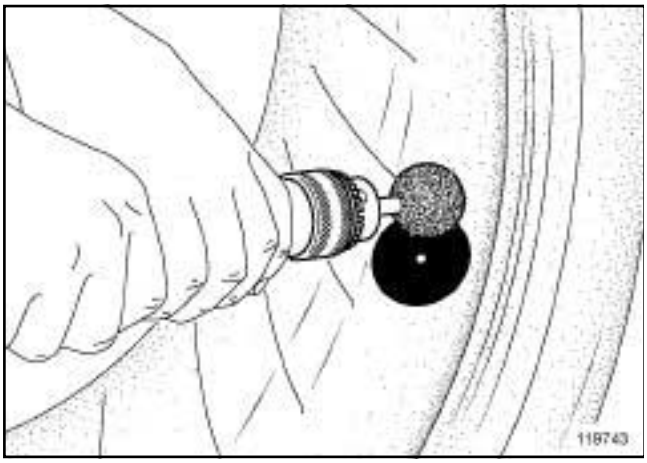

119743

❏ Carefully scrape the rubber seal around the perforation, to the size of the base of the plug (mushroom type plug).

> Note:
>
> If the rubber seal is damaged during this operation, replace the tyre.

❏ Remove any dust and remaining particles of rubber using a clean, dry cloth.

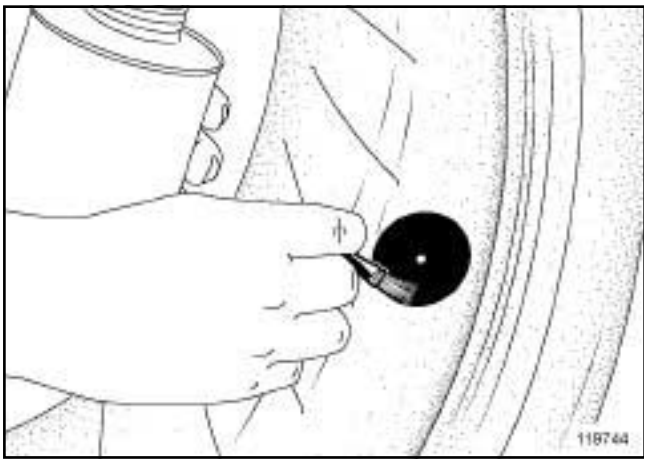

119744

❏ Apply the solution to the scraped surface.

> Note:
>
> Respect the required drying time for the solution.

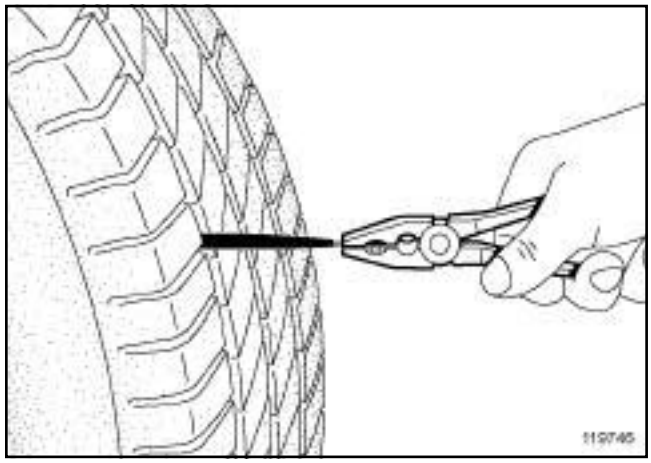

119746

❏ Fit the (mushroom type) plug via the interior of the tyre by pulling on it using pliers.

❏ Press gently on the base of the mushroom plug, inside the tyre.

❏ Refit the tyre.

❏ Inflate the tyre (see **Tyre pressure: Identification**) .

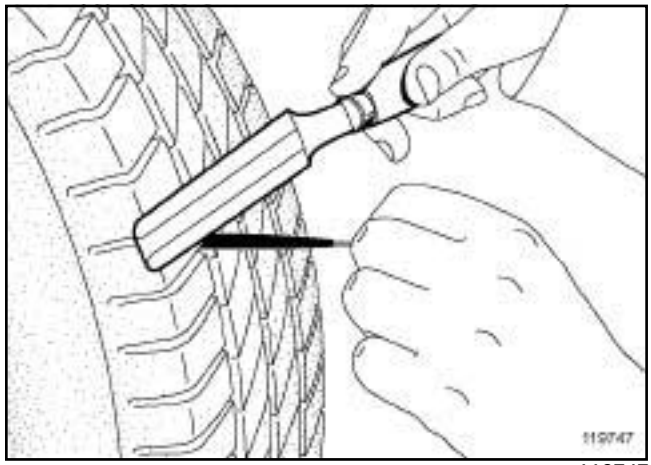

119747

❏ Cut the protruding end of the stalk without pulling on it.

❏ Check the tyre seal.

III - FINAL OPERATION.

❏ Balance the wheel (see **35A**, **Wheels and tyres**, **Wheel: Balancing**, page **35A-4**) .

❏ Refit the wheel (see **35A**, **Wheels and tyres**, **Wheel: Removal - Refitting**, page **35A-1**) .

IDENTIFICATION

1 - Marking

There are two types of identification marking on the wheel rims:

- engraved marking for steel wheel rims,

- cast marking for alloy wheel rims.

The marking gives the main dimensional specifications of the wheel rim.

This marking may be:

- complete, for example **6 J 15 5 CH 36,**

- simplified, for example **6 J 15**.

	Wheel type	**6 J 15**
1	Width (in inches)	6
2	Rim edge profile	J
3	Nominal diameter (in inches)	15
4	Number of holes	5
5	Anchorage profile of the tyre	CH
6	Offset (in mm)	36

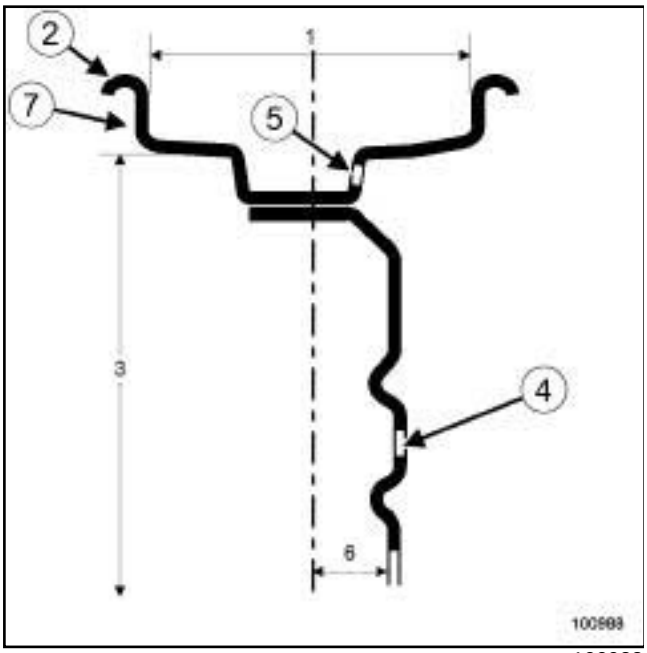

100988

There are 3 types of wheel rim edges (**2**) :

- those with two flat edges,

- those with two raised edges,

- those with one flat edge and one raised edge.

2 - Installation diameter for the wheel bolts

3 - Rim run-out

The maximum run-out is measured at the wheel rim edge ***(7)*** .

4 - Out-of-roundness

The maximum out-of-round value is measured on the tyre bead bearing surface.

4X2 TRANSMISSION

REMOVAL

I - REMOVAL PREPARATION OPERATION

❑ Position the vehicle on a two-post lift (see **Vehicle: Towing and lifting**) (02A, Lifting equipment).

II - OPERATION FOR REMOVAL OF PART CONCERNED

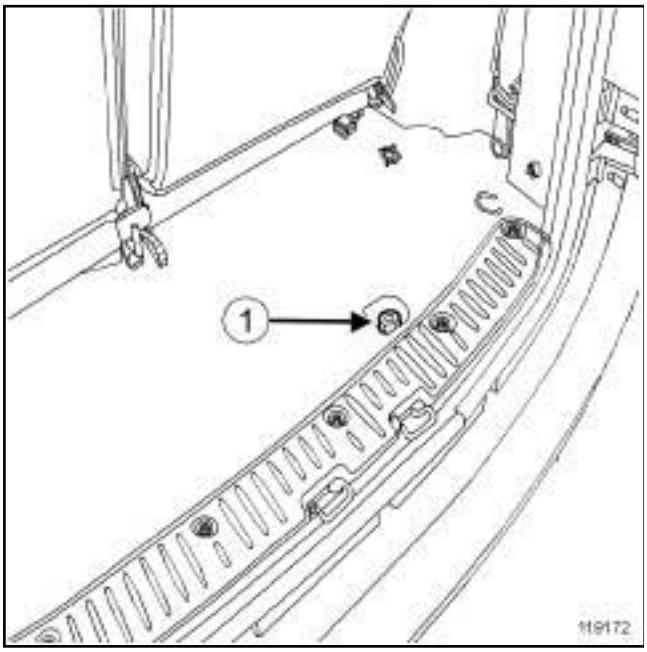

119172

❑ In the luggage compartment, loosen the mounting bolt (**1**) on the emergency spare wheel carrier hook.

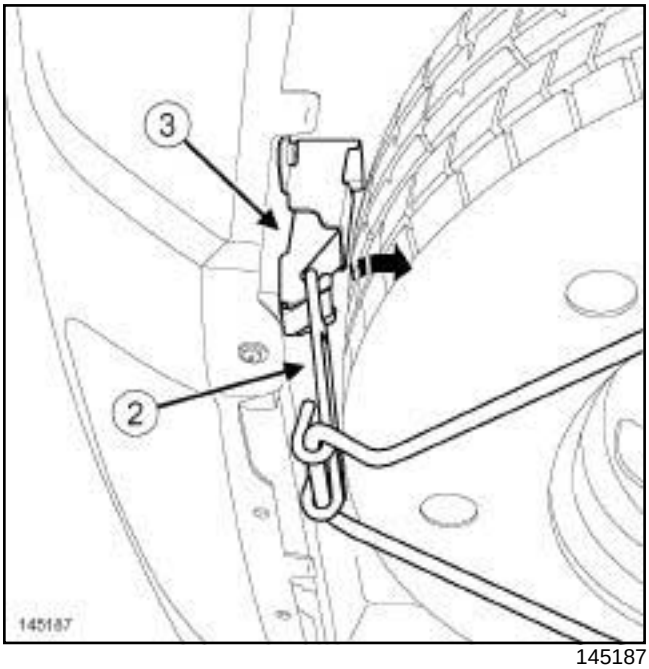

145187

❑ Unhook the handle (**2**) of the emergency spare wheel carrier from the hook (**3**) in the direction of the arrow.

❑ Tilt the emergency spare wheel carrier downwards while holding the emergency spare wheel.

❑ Remove the emergency spare wheel.

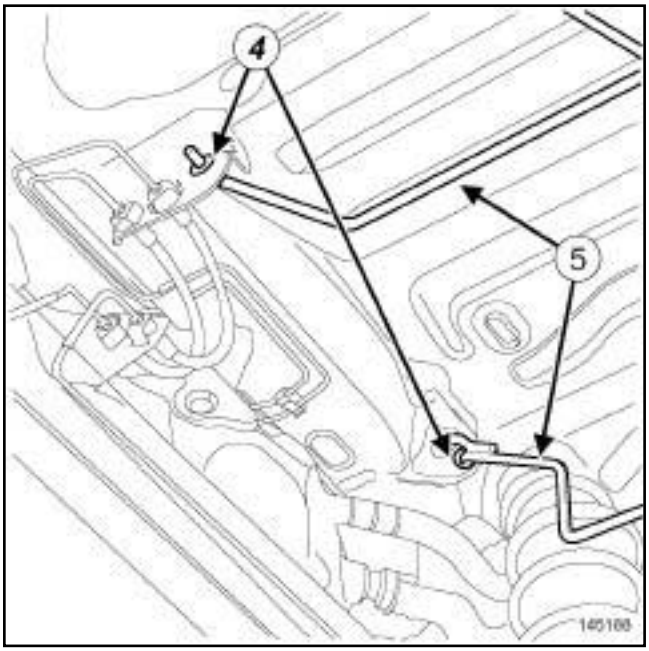

145188

❑ Remove:

- the lock washers (**4**)
- the two arms (**5**) of the emergency spare wheel carrier,
- the emergency spare wheel carrier.

REFITTING

I - REFITTING PREPARATION OPERATION

❏ Always replace the lock washers.

II - REFITTING OPERATION FOR PART CONCERNED

❏ Refit the arms of the emergency spare wheel carrier on the body mountings.

❏ Refit the lock washers ***(4)***

❏ Refit the emergency spare wheel in the carrier.

❏ Tilt the emergency spare wheel carrier upwards.

❏ Clip the handle of the emergency spare wheel carrier onto the hook.

III - FINAL OPERATION

❏ Tighten the mounting bolt on the hook of the emergency spare wheel carrier.

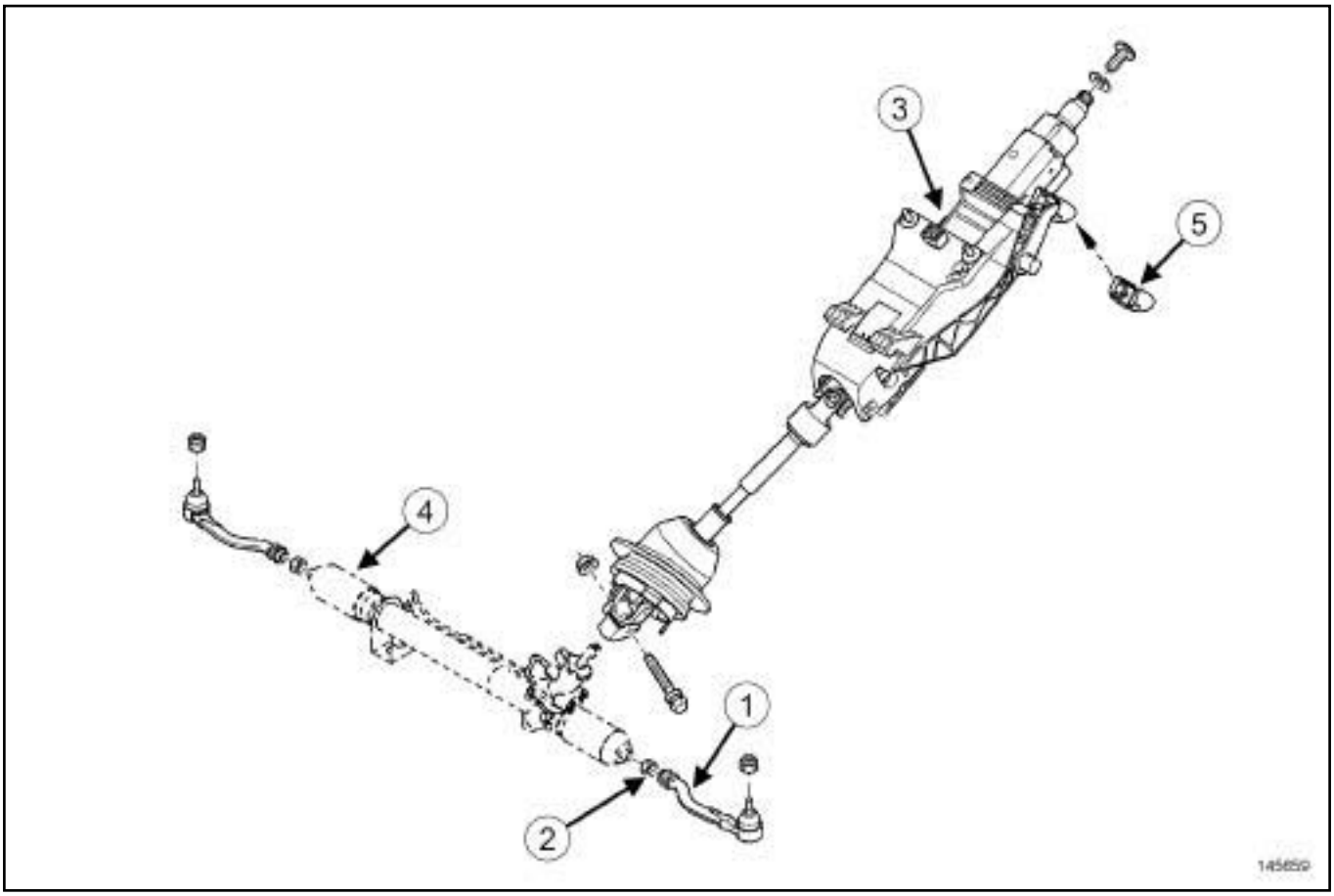

145659

(**1**)	Track rod
(**2**)	Axial ball joint linkage
(**3**)	Steering column
(**4**)	Steering box gaiter
(**5**)	Steering column adjustment lever

I - SAFETY

1 - Advice to be followed before any operation

For an operation requiring the use of a lift, follow the safety advice (see **Vehicle: Towing and lifting**) (02A, Lifting equipment).

2 - Instruction to be followed during the operation

IMPORTANT
Wear protective gloves during the operation.

WARNING
Prepare for the flow of fluid, and protect the surrounding components.

II - CLEANLINESS

1 - Advice to be followed before any operation

Use a cover to protect any chassis elements that may be contaminated with power-assisted steering fluid.

2 - Instruction to be followed during the operation

Clean around the power-assisted steering system using **BRAKE CLEANER** (see **Vehicle: Parts and consumables for the repair**) (04B, Consumables - Products).

III - GENERAL RECOMMENDATIONS

To ensure correct operation and performance of the system, do not attempt to repair any components other than those supplied in After-Sales.

To ensure the quality of the repair, only use the tooling recommended by the manufacturer.

1 - Power assisted steering circuit:

a - Power-assisted steering fluid

Only use the fluid recommended by the manufacturer, in order to ensure correct system performance (see **Vehicle: Parts and consumables for the repair**) (04B, Consumables - Products).

b - Blanking plugs

To prevent impurities from entering the power assisted steering circuit, use blanking plugs on the various dismantled parts.

2 - Seals

To ensure a sound power-assisted steering circuit seal, replace the power-assisted steering pipe seals each time a pipe is removed.

3 - Steering column

WARNING
In order not to damage the steering wheel or steering column, the steering wheel-column foolproofing devices must be aligned.

Do not rest the steering column on the adjustment handle.

Do not handle the steering column by the adjustment handle or by the wiring.

Manoeuvre the «steering column - intermediate shaft » assembly by holding each section (one hand on the column and the other on the intermediate shaft). If the steering column is not handled correctly, there is a risk that the steering column or intermediate shaft could fall, which could destroy the system.

Always replace the steering column if it is dropped or in the event of an impact.

4 - Steering box

The steering box should not be carried by the gaiters or pipes, as this may damage them.

When the vehicle is positioned with the wheels suspended, the steering rack must not be subjected to violent movements from lock to lock.

Risks: Damage to the teeth of the steering rack and pinion may cause a **safety risk** relating to the steering unexpectedly locking.

5 - Axial ball joint

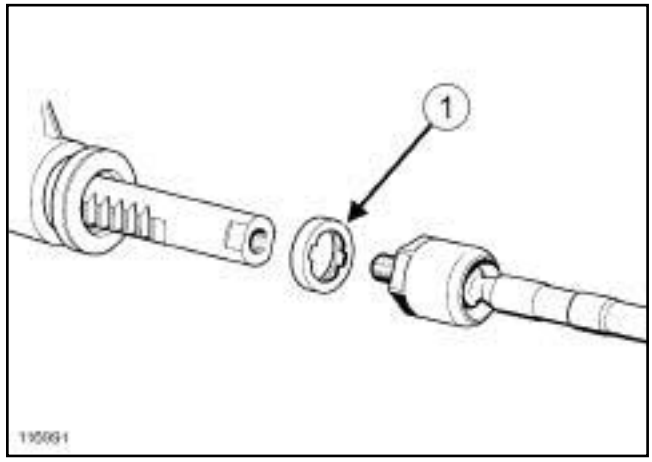

116991

The axial ball joint limiters (**1**) are colour coded for foolproofing purposes. When removing or replacing the axial ball joint, check that the limiter with the correct colour code is refitted.

6 - Power-assisted steering pump

Do not run the engine without steering fluid in the circuit.

7 - Pump assembly

Do not run the engine without steering fluid in the circuit.

8 - Wiring harnesses

Ensure that the electrical wiring is clean and correctly routed.

Tightening torques ▽	
track rod ball joint nut	**37 N.m**
wheel alignment adjusting lock nut	**53 N.m**

IMPORTANT
Consult the safety and cleanliness advice and operation recommendations before carrying out any repair (see **36A**, **Steering assembly**, **Steering: Precautions for the repair**, page **36A-2**) .

REMOVAL

I - REMOVAL PREPARATION OPERATION

❏ Position the vehicle on a two-post lift (see **Vehicle: Towing and lifting**) (02A, Lifting equipment).

❏ Remove the front wheel (see **35A**, **Wheels and tyres**, **Wheel: Removal - Refitting**, page **35A-1**) .

II - OPERATION FOR REMOVAL OF PART CONCERNED

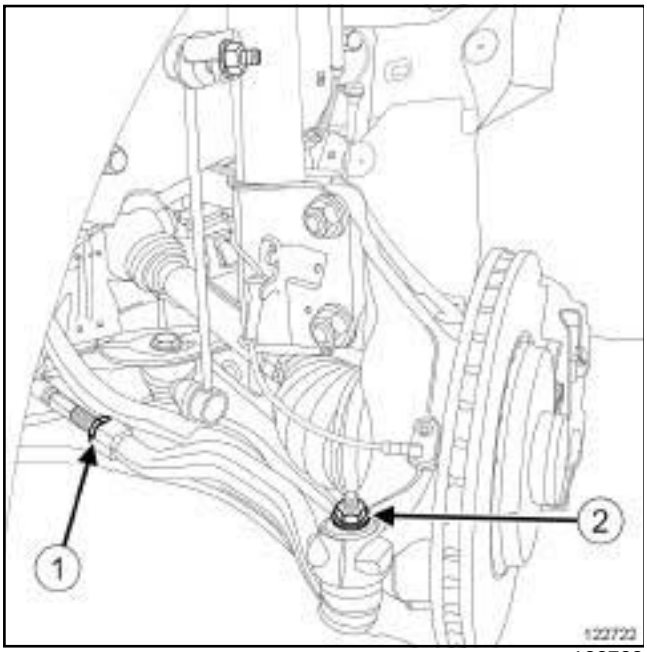

122722

❏ Loosen the wheel alignment adjustment lock nut (**1**) .

❏ Remove the track rod ball joint nut (**2**) .

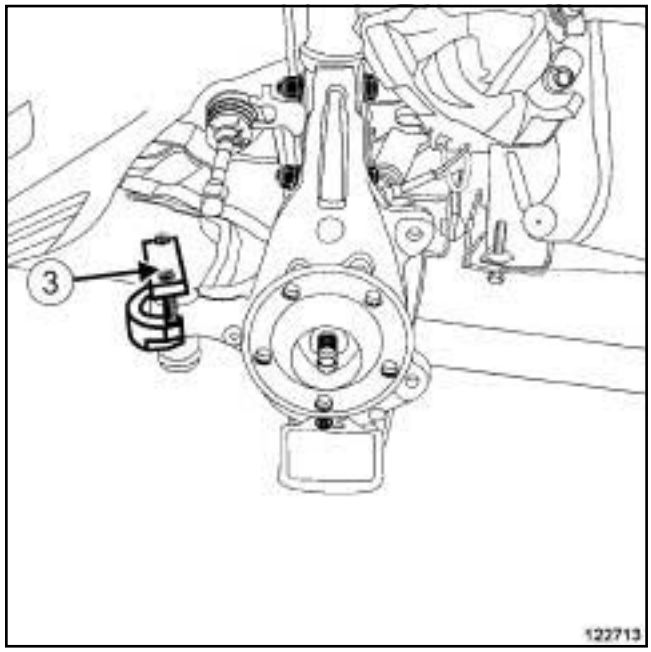

122713

❏ Extract the ball joint using (**3**) .

❏ Unscrew the track rod anti-clockwise and note the number of turns for refitting.

❏ Remove the track rod.

REFITTING

I - REFITTING OPERATION FOR PART CONCERNED

❏ Screw the track rod back in place by the number of turns noted during removal.

❏ Fit the track rod end in the hub carrier.

❏ Refit the track rod ball joint nut.

❏ Tighten to torque:

- the **track rod ball joint nut (37 N.m)**,
- the **wheel alignment adjusting lock nut (53 N.m)**.

II - FINAL OPERATION

❏ Refit the wheel (see **35A**, **Wheels and tyres**, **Wheel: Removal - Refitting**, page **35A-1**) .

❏ Check the axle geometry (see **30A**, **General information**, **Axle assemblies: Check**, page **30A-15**) .

❏ If necessary, adjust the geometry of the axle assemblies (see **30A**, **General information**, **Front axle system: Adjustment**, page **30A-18**) .

Tightening torques ▽	
axial ball joint	**80 N.m**

REMOVAL

I - REMOVAL PREPARATION OPERATION

- ❑ Position the vehicle on a two-post lift (see **Vehicle: Towing and lifting**) (02A, Lifting equipment).
- ❑ Remove the front wheel on the side concerned (see **35A**, **Wheels and tyres**, **Wheel: Removal - Refitting**, page **35A-1**) .
- ❑ Remove the track rod (see **36A**, **Steering assembly**, **Track rod: Removal - Refitting**, page **36A-4**) .
- ❑ Remove the steering box gaiter (see **36A**, **Steering assembly**, **Steering box gaiter: Removal - Refitting**, page **36A-9**)
- ❑ Unlock the steering column.

II - OPERATION FOR REMOVAL OF PART CONCERNED

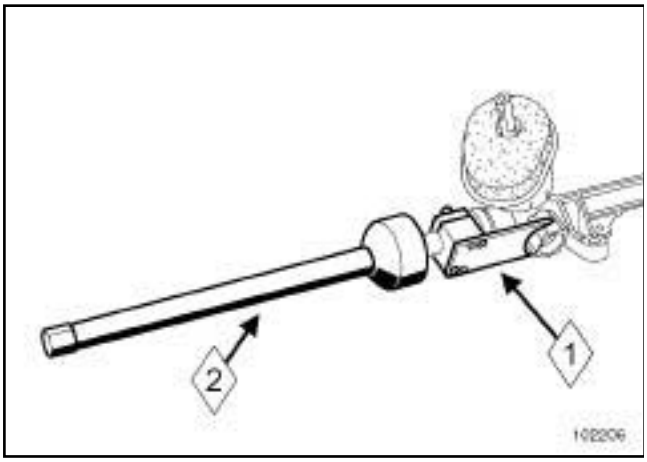

102206

- ❑ Set up the (**1**) on the steering rack, at the pinion end.

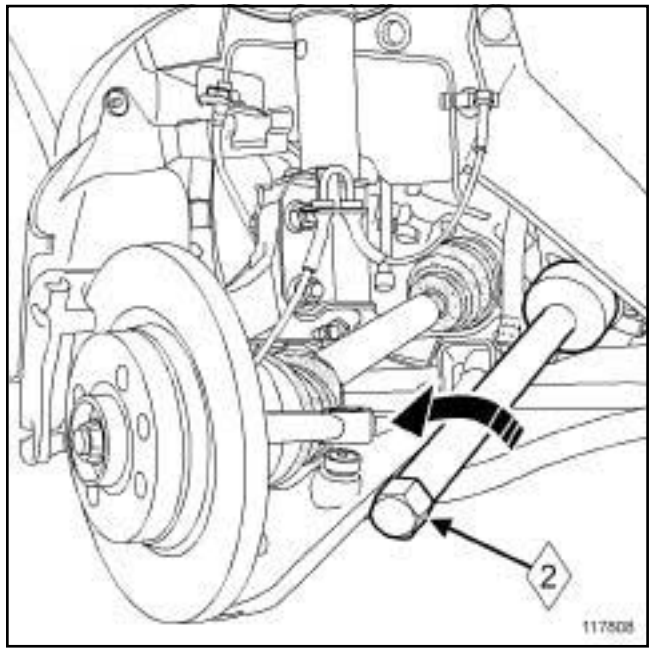

117808

- ❑ Unlock the axial ball joint using tool (**2**) .
- ❑ Remove the axial ball joint.

REFITTING

I - REFITTING PREPARATION OPERATION

- ❑

> Note:
>
> Take care not to deform the gaiters: they could be irreparably damaged.

II - REFITTING OPERATION

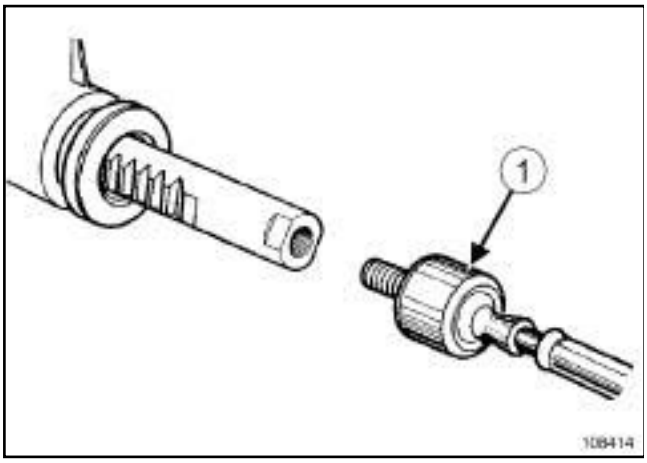

108414

- ❑ Coat the threading of the axial ball joint with **HIGH STRENGTH THREAD LOCK** (see **Vehicle: Parts and consumables for the repair**) .
- ❑ Refit the axial ball joint (**1**) .
- ❑ Torque tighten the **axial ball joint (80 N.m)** using the tool.
- ❑ Remove the
- ❑ Coat the following with **SILICONE GREASE** (see **Vehicle: Parts and consumables for the repair**) ,
  - the steering rack,
  - the axial ball joint.

III - FINAL OPERATION

- ❑ Refit:
  - the steering box gaiter (see **36A**, **Steering assembly**, **Steering box gaiter: Removal - Refitting**, page **36A-9**) ,
  - the track rod (see **36A**, **Steering assembly**, **Track rod: Removal - Refitting**, page **36A-4**) ,
  - the wheel (see **35A**, **Wheels and tyres**, **Wheel: Removal - Refitting**, page **35A-1**) .
- ❑ Check the front axle geometry (adjust if necessary) (see **Front axle assembly: Adjustment values**) .

Tightening torques ▽	
universal joint bolt	**21 N.m**
steering column nuts	**21 N.m**

IMPORTANT
To avoid all risk of damage to the systems, apply the safety and cleanliness instructions and operation recommendations before carrying out any repair (see **36A**, **Steering assembly**, **Steering: Precautions for the repair**, page **36A-2**) .

REMOVAL

I - REMOVAL PREPARATION OPERATION

❑ Set the wheels straight ahead.

❑ Lock the airbag computer (see **Fault finding - Replacement of components**) (88C, Airbags and pretensioners).

❑ Disconnect the battery (see **Battery: Removal - Refitting**) (80A, Battery).

❑ Remove:

- the driver's front airbag (see **Driver's frontal airbag: Removal - Refitting**) (88C, Airbags and pretensioners),
- the steering wheel (see **36A**, **Steering assembly**, **Steering wheel: Removal - Refitting**, page **36A-13**) ,
- the steering column switch assembly (see **Steering column switch assembly: Removal - Refitting**) (84A, Control - Signals),
- the instrument panel (see **Instrument panel: Removal - Refitting**) (83A, Instrument panel),
- the radio (see **Radio: Removal - Refitting**) (86A, Radio),
- the dashboard (see **Dashboard: Removal - Refitting**) (57A, Interior equipment).

II - OPERATION FOR REMOVAL OF PART CONCERNED

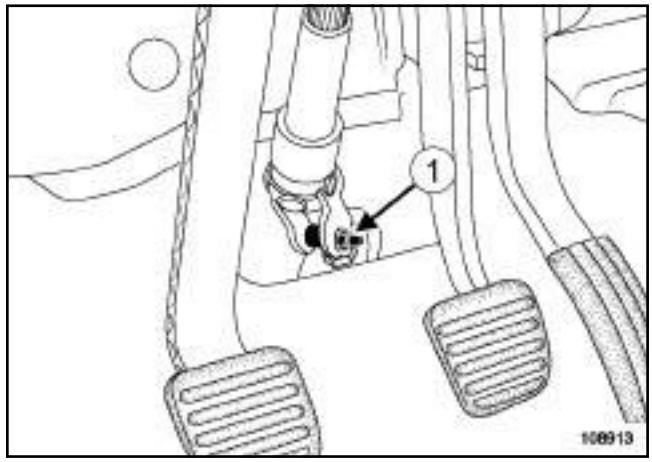

108913

❑ Remove the steering column universal joint bolt (**1**) .

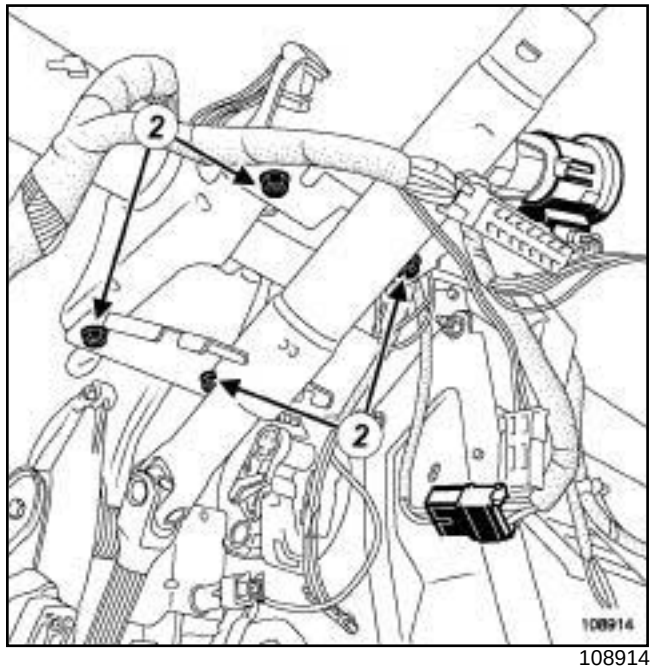

108914

❑ Remove:

- the steering column bolts (**2**) ,
- the steering column.

❑ Remove the ignition switch (see **Ignition switch: Removal - Refitting**) (82A, Immobiliser).

REFITTING

I - REFITTING PREPARATION OPERATION

❑ **parts always to be replaced: Steering shaft yoke boltparts always to be replaced: Steering shaft yoke nutparts always to be replaced: Steering wheel bolt**

II - REFITTING OPERATION FOR PART CONCERNED

❑ Refit the ignition switch (see **Ignition switch: Removal - Refitting**) . (82A, Immobiliser).

❑ Refit a new cam nut for the universal joint on the steering column

❑ Lock the cam nut in its housing (opening on the universal joint).

❑ Refit:

- the steering column,
- the universal joint bolt,
- the bolts on the steering column.

❑ Torque tighten:

- the **universal joint bolt (21 N.m)**,
- the **steering column nuts (21 N.m)**.

III - FINAL OPERATION

❑ Refit:

- the dashboard (see **Dashboard: Removal - Refitting**) (57A, Interior equipment).
- the radio (see **Radio: Removal - Refitting**) (86A, Radio),
- the instrument panel (see **Instrument panel: Removal - Refitting**) (83A, Instrument panel),
- the steering column switch assembly (see **Steering column switch assembly: Removal - Refitting**) (84A, Control - Signals),
- the steering wheel (see **36A**, **Steering assembly**, **Steering wheel: Removal - Refitting**, page **36A-13**) ,
- the driver's front airbag (see **Driver's frontal airbag: Removal - Refitting**) (88C, Airbags and seat belt pretensioners),

❑ Connect the battery (see **Battery: Removal - Refitting**) (80A, Battery).

❑ Unlock the airbag computer (see **Fault finding - Replacement of components**) (88C, Airbag and pretensioners).

REMOVAL

I - REMOVAL PREPARATION OPERATION

❑ Position the vehicle on a two-post lift (see **Vehicle: Towing and lifting**) (02A, Lifting equipment).

❑ Remove:

- the front wheel (see **35A**, **Wheels and tyres**, **Wheel: Removal - Refitting**, page **35A-1**) ,
- the track rod (see **36A**, **Steering assembly**, **Track rod: Removal - Refitting**, page **36A-4**) ,
- the wheel alignment adjustment lock nut.

II - OPERATION FOR REMOVAL OF PART CONCERNED

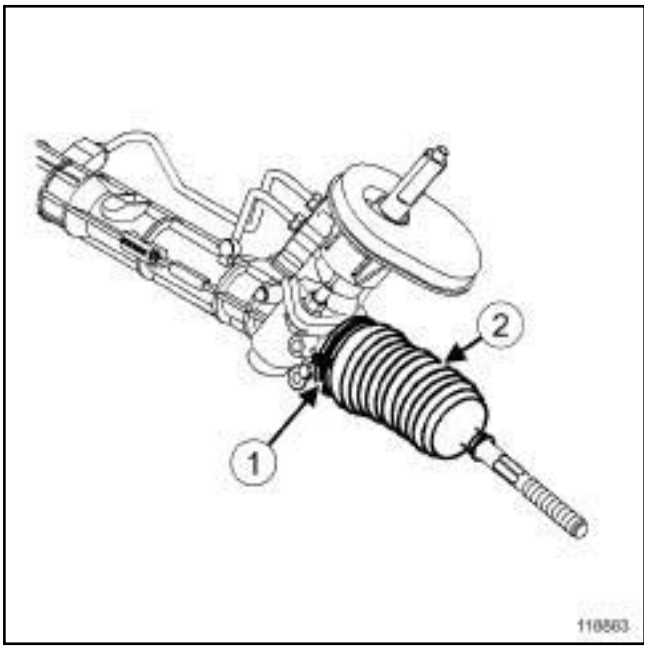

118883

❑

> Note:
>
> When removing the steering gaiter, blast the gaiter surfaces with compressed air to eliminate any impurities that could enter the steering box.

❑ Cut the gaiter retaining clip (**1**) .

❑ Remove the gaiter (**2**) .

REFITTING

I - REFITTING PREPARATION OPERATION

❑ Always replace:

- the steering box gaiter,
- the retaining clip.

❑ Clean the contact surfaces between the steering box and the gaiter using **SURFACE CLEANER** (see **Vehicle: Parts and consumables for the repair**) (04B, Consumables - Products).

❑ Use **SILICONE GREASE** (see **Vehicle: Parts and consumables for the repair**) (04B, Consumables - Products) to coat the mating face of the gaiter on the axial ball joint to prevent the gaiter from twisting.

> Note:
>
> Be sure to centre the steering to ensure the air in the gaiters is equalised.

> Note:
>
> Be careful not to damage the gaiters: risk of irreversible damage.

II - REFITTING OPERATION FOR PART CONCERNED

❑ Refit:

- the new steering box gaiter,
- the new retaining clip.

III - FINAL OPERATION

❑ Refit:

- the wheel alignment adjustment lock nut,
- the track rod (see **36A**, **Steering assembly**, **Track rod: Removal - Refitting**, page **36A-4**) ,
- the wheel (see **35A**, **Wheels and tyres**, **Wheel: Removal - Refitting**, page **35A-1**) .

❑ Check the axle geometry (see **30A**, **General information**, **Axle assemblies: Check**, page **30A-15**) .

❑ If necessary, adjust the geometry of the axle assemblies (see **30A**, **General information**, **Front axle system: Adjustment**, page **30A-18**) .

IMPORTANT
To avoid all risk of damage to the systems, apply the safety and cleanliness instructions and operation recommendations before carrying out any repair (see **36A**, **Steering assembly**, **Steering: Precautions for the repair**, page **36A-2**) .

REMOVAL

I - REMOVAL PREPARATION OPERATION

❏ Position the vehicle on a two-post lift (see **Vehicle: Towing and lifting**) (02A, Lifting equipment).

❏ Remove:

- the front wheels (see **35A**, **Wheels and tyres**, **Wheel: Removal - Refitting**, page **35A-1**) ,
- the engine undertray.

❏ Remove the steering box (see **Steering box: Removal - Refitting**) .

II - OPERATION FOR REMOVAL OF PART CONCERNED

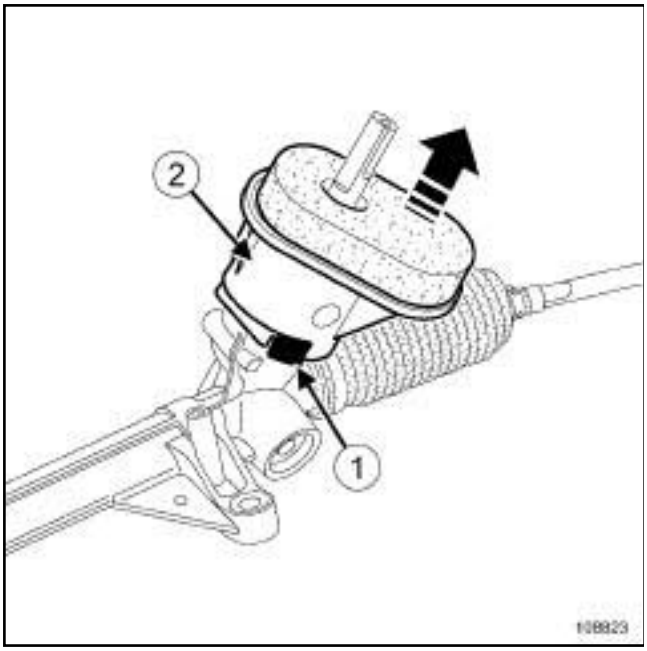

108823

❏ Unclip the bulkhead seal at (**1**) using a flat-blade screwdriver.

❏ Remove the bulkhead seal (**2**) .

REFITTING

I - REFITTING OPERATION FOR PART CONCERNED

❏ Fit the bulkhead seal in its original position.

❏ Clip the bulkhead seal onto the steering box.

II - FINAL OPERATION

❏ Refit the steering box (see **Steering box: Removal - Refitting**) .

❏ Refit:

- the engine undertray,
- the front wheels (see **35A**, **Wheels and tyres**, **Wheel: Removal - Refitting**, page **35A-1**) .

REMOVAL

I - REMOVAL PREPARATION OPERATION

❑ Disconnect the battery (see) (80A, Battery).

❑ Remove:

- the bolts on the steering wheel lower cover,
- the half covers under the steering wheel (see **Instrument panel: Removal - Refitting**) (83A, Instrument panel),
- the immobiliser ring.

❑ Disconnect the various connectors.

II - OPERATION FOR REMOVAL OF PART CONCERNED

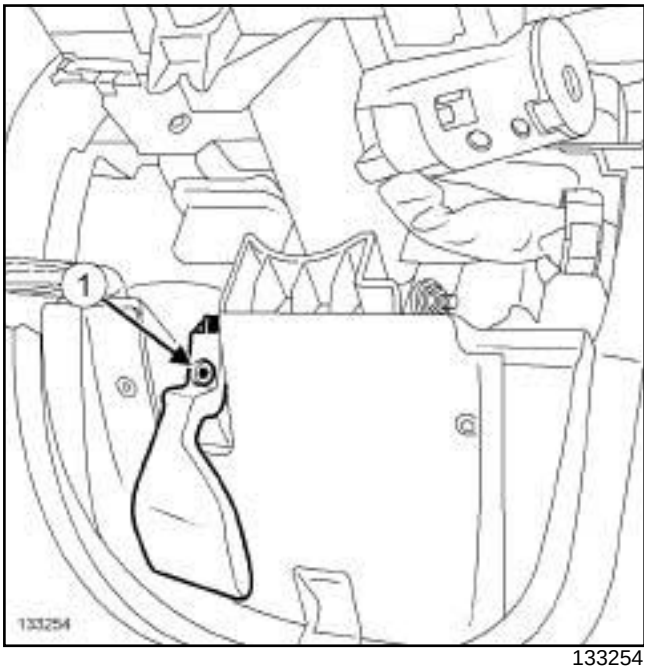

133254

❑ Remove:

- the bolt (**1**) of the adjustment handle,
- the adjustment handle.

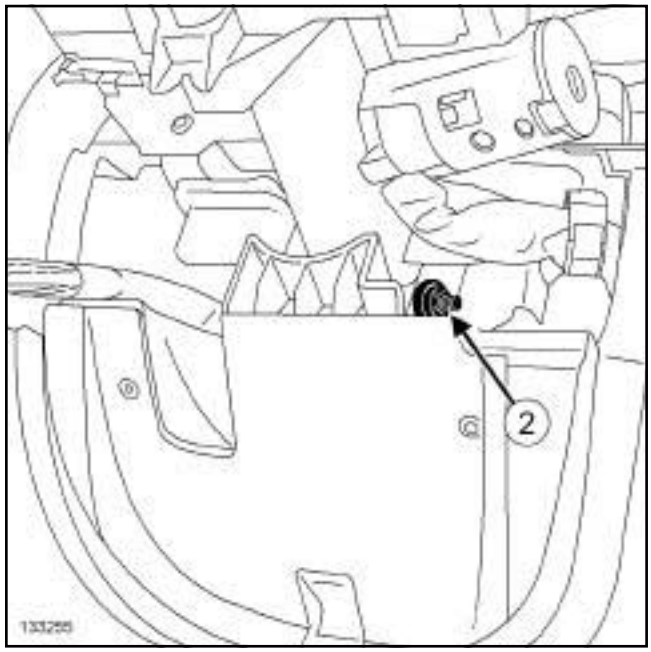

133255

❑

> Note:
>
> Note the position of the locking mechanism before removal.

❑ Remove:

- the nut (**2**) of the adjustment handle shaft,
- the needle bearing,
- the «adjustment handle shaft - locking mechanism» assembly.

REFITTING

I - REFITTING PREPARATION OPERATION

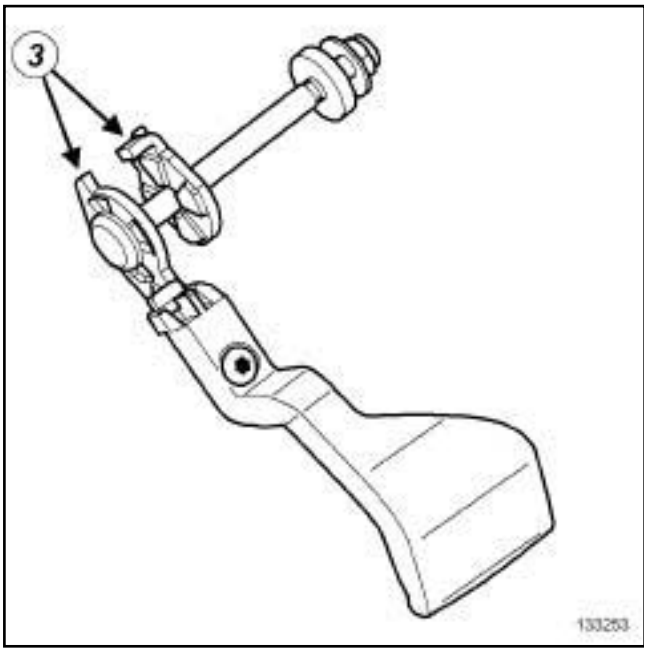

133253

❑

> Note:
>
> When refitting the handle shaft, ensure that the two notched segments (**3**) are correctly positioned.

II - REFITTING OPERATION FOR PART CONCERNED

❑ Refit:

- the «adjustment handle shaft - locking mechanism» assembly,
- the needle bearing,
- the nut of the adjustment handle shaft,
- the adjustment handle,
- the bolt of the adjustment handle.

> Note:
>
> The amount of effort required to operate the handle shaft is determined by how much it is tightened. Test to detemine the correct tightening.

III - FINAL OPERATION

❑ Connect the various connectors.

❑ Refit:

- the immobiliser ring,
- the half covers under the steering wheel (see **Instrument panel: Removal - Refitting**) (83A, Instrument panel),
- the bolts on the steering wheel lower cover.

❑ Connect the battery (see) (80A, Battery).

Tightening torques ▽	
new steering wheel bolt	**44 N.m**

IMPORTANT
Consult the safety and cleanliness advice and operation recommendations before carrying out any repair (see **36A**, **Steering assembly**, **Steering: Precautions for the repair**, page **36A-2**) .

REMOVAL

I - REMOVAL PREPARATION OPERATION

❏ Apply the procedure for deactivating the safety systems. (see **Airbag and pretensioners: Precautions for the repair**)

❏

WARNING
Incorrect wheel alignment may damage the rotary switch.

❏ Remove the driver's front airbag (see **Driver's frontal airbag: Removal - Refitting**) .

❏ Set the wheels straight ahead.

❏ Disconnect the connectors.

II - OPERATION FOR REMOVAL OF PART CONCERNED

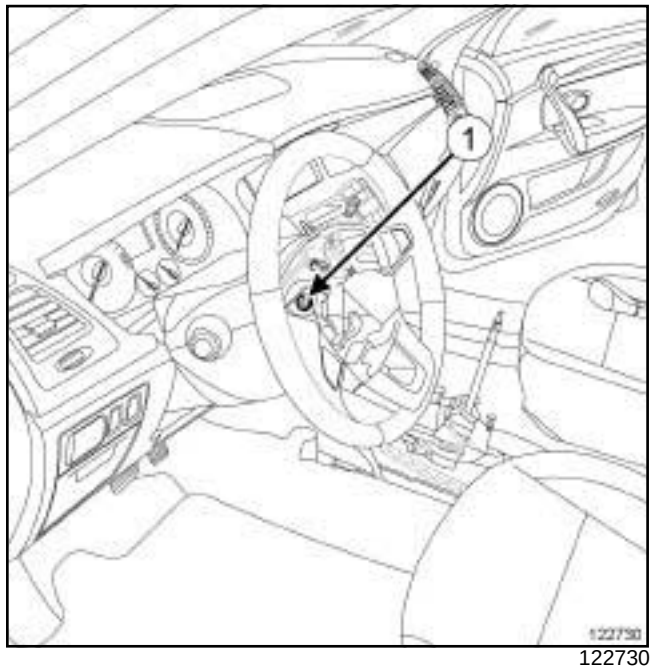

122730

❏ Remove the steering wheel bolt (**1**) .

WARNING
To ensure that the electronic systems operate correctly, do not damage the locking systems of the connectors.

❏ Remove the steering wheel.

❏

WARNING
To prevent damaging the rotary switch, do not turn the mobile section of the rotary switch.

REFITTING

I - REFITTING PREPARATION OPERATION

❏ **parts always to be replaced: Steering wheel bolt**.

II - REFITTING OPERATION FOR PART CONCERNED

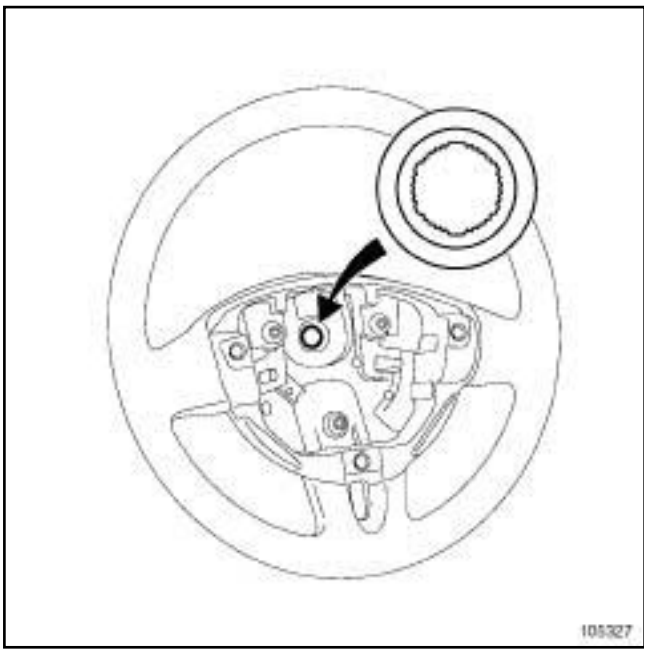

105327

❑

> **WARNING**
> In order not to damage the steering wheel or steering column, the steering wheel-column fool-proofing devices must be aligned.

❑ Refit the steering wheel.

❑ Connect the connectors.

❑ Refit the new steering wheel bolt.

❑ Torque tighten the **new steering wheel bolt (44 N.m)**.

III - FINAL OPERATION

❑ Refit the driver's front airbag (see **Driver's frontal airbag: Removal - Refitting**) .

IV - CHECKING AFTER REPAIR

❑ Switch on the ignition.

❑ Check the operation of the rotary switch:

- turn the steering wheel to the left until it stops,
- turn the steering wheel to the right until it stops,
- check that there are no faults on the instrument panel.

Power-assisted steering pump pressure: Check

K4M – K9K, and STANDARD HEATING RECIRCULATION

Tightening torques ▽	
pressostat	**12 N.m**
power-assisted steering pump outlet high pressure union	**21 N.m**

❑ Position the vehicle on a two-post lift (see **Vehicle: Towing and lifting**) (02A, Lifting equipment).

❑ Remove the engine undertray.

❑ Fit a hose clamp on the power-assisted steering pump oil inlet pipe to restrict the flow.

❑

> Note:
>
> Protect the alternator from escaping power assisted steering fluid.

K4M

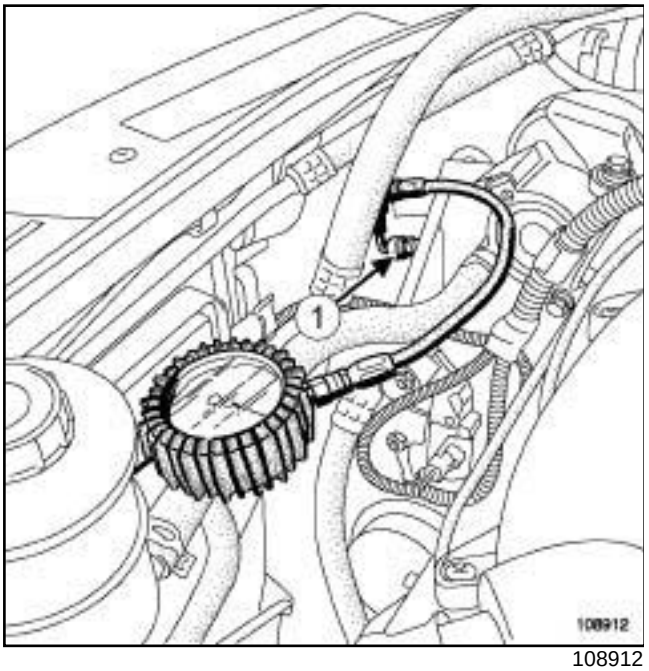

108912

❑ Disconnect the pressure switch connector.

❑ Remove the pressostat.

❑ Fit thein place of the pressostat (**1**) .

❑ Connect theto the.

K9K

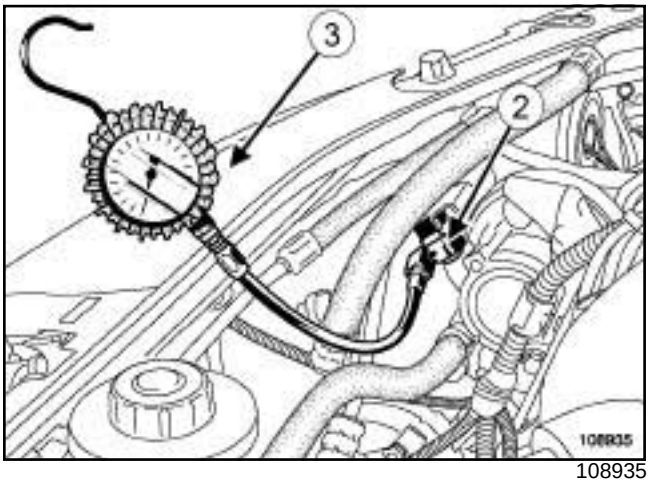

108935

❑ Remove the high pressure pipe union mounting from the power-assisted steering pump outlet.

❑ Fit the (**2**) between the power-assisted steering pump and the power-assisted steering pump outlet high pressure union.

❑ Connect the (**3**) and theto the.

❑ Remove the hose clamp.

❑ Lower the vehicle.

❑ Fill the power-assisted steering circuit with **ELF RENAULT MATIC D2** oil (see **Vehicle: Parts and consumables for the repair**) (04B, Consumables - Products).

❑ Bleed the circuit by turning the steering wheel from lock to lock with the engine switched off in the first instance.

> **WARNING**
>
> To avoid damaging the power-assisted steering system, do not keep the steering at full lock.

❑ Set the vehicle wheels straight ahead.

❑ Bleed the circuit by turning the steering wheel from lock to lock with the engine running.

❑ Top up the fluid in the reservoir.

❑ Remove:

- the front right-hand wheel arch liner (see **Front wheel arch liner: Removal - Refitting**) (55A, Exterior protection),
- the front right-hand wheel (see **35A**, **Wheels and tyres**, **Wheel: Removal - Refitting**, page **35A-1**) .

K4M – K9K, and STANDARD HEATING RECIRCULATION

❏ Check:

- the power-assisted steering pump pressure with the steering wheel straight and not being used; the value should not exceed **5** to **7 bar**,
- the power-assisted steering pump pressure with the steering wheel turned as far as it will go; the maximum value should be **79** to **86 bar**.

❏ Switch off the engine.

❏ Raise the vehicle.

❏ Fit a hose clamp on the power-assisted steering pump oil inlet pipe to restrict the flow.

❏ Remove thethen its adapter.

WARNING
Be sure to replace the O-rings removed from the power-assisted steering unions.

K4M

❏ Remove theand its union.

❏ Refit the pressostat.

❏ Torque tighten the **pressostat (12 N.m)**.

❏ Connect its connector.

K9K

❏ Remove theand its union.

❏ Refit the power-assisted steering pump outlet high pressure pipe union.

❏ Torque tighten the **power-assisted steering pump outlet high pressure union (21 N.m)**.

❏ Remove the hose clamp.

❏ Fill the power-assisted steering circuit with **ELF RENAULT MATIC D2** oil (see **Vehicle: Parts and consumables for the repair**) (04B, Consumables - Products).

❏ Bleed the circuit by turning the steering wheel from lock to lock with the engine switched off in the first instance.

❏ Set the vehicle wheels straight ahead.

WARNING
To avoid damaging the power-assisted steering system, do not keep the steering at full lock.

❏ Bleed the circuit by turning the steering wheel from lock to lock with the engine running.

❏ Top up the fluid in the reservoir.

❏ Refit:

- the front right-hand wheel arch liner (see **Front wheel arch liner: Removal - Refitting**) (55A, Exterior protection),
- the front right-hand wheel (see **35A**, **Wheels and tyres**, **Wheel: Removal - Refitting**, page **35A-1**) .

❏ Check that there are no leaks.

❏ Refit the engine undertray.

K9K, and AIR CONDITIONING

Tightening torques ▽	
bolt mounting the high pressure pipe union on the power-assisted steering pump assembly	**25 N.m**
bolt mounting the high pressure pipe union on the power-assisted steering pump assembly	**25 N.m**

❑ Position the vehicle on a two-post lift (see **Vehicle: Towing and lifting**) (02A, Lifting equipment).

❑ Remove:

- the front left-hand wheel (see **35A**, **Wheels and tyres**, **Wheel: Removal - Refitting**, page **35A-1**) ,
- the front bumper (see **Front bumper: Removal - Refitting**) (55A, Exterior protection),
- the front left-hand wheel arch liner (see **Front wheel arch liner: Removal - Refitting**) (55A, Exterior protection),
- the power-assisted steering pump assembly mountings.

❑ Fit a hose clamp on the flexible pipe of the power-assisted steering pump assembly.

❑

> Note:
>
> Prepare for oil escaping from the power-assisted steering system.

❑ Remove the bolt mounting the high pressure pipe union on the power-assisted steering pump assembly.

❑ Disconnect the high pressure pipe on the power-assisted steering pump assembly.

❑ Fit thebetween the power-assisted steering pump assembly and the power-assisted steering pump assembly outlet high pressure pipe union.

❑ Refit the high pressure pipe union mounting bolt and of theto the power-assisted steering pump assembly.

❑ Torque tighten the **bolt mounting the high pressure pipe union on the power-assisted steering pump assembly (25 N.m)**.

❑ Connect the pressure gauge of theto theusing union **"C"**.

❑ Remove the hose clamp.

❑ Lower the vehicle.

❑ Fill up the power assisted steering oil circuit (type: **ELF RENAULTMATIC D2**).

❑ Bleed the circuit by turning the steering wheel from lock to lock with the engine switched off at first.

❑ Bleed the circuit by turning the steering wheel from lock to lock with the engine running.

❑ Fill the oil to the correct level in the reservoir (if necessary).

❑ Check the pressure of the power-assisted steering pump assembly with the steering wheel at full lock: the maximum value should be **90 bar**.

❑ Switch off the engine.

❑ Raise the vehicle.

❑ Fit a hose clamp on the flexible pipe of the power-assisted steering pump assembly.

❑

> Note:
>
> Be sure to replace the O-rings removed from the power-assisted steering unions.

❑ Remove:

- the pressure gauge of theand its union **"C"**,
- the mounting bolt of theand of the high pressure pipe union on the power-assisted steering pump assembly.

❑ Reconnect the high pressure pipe union to the power-assisted steering pump assembly.

❑ Refit the high pressure pipe union mounting bolt to the power assisted steering pump assembly.

❑ Torque tighten the **bolt mounting the high pressure pipe union on the power-assisted steering pump assembly (25 N.m)**.

❑ Remove the hose clamp.

❑ Fill up the power assisted steering oil circuit (type: **ELF RENAULTMATIC D2**).

❑ Bleed the circuit by turning the steering wheel from lock to lock with the engine switched off at first.

❑ Bleed the circuit by turning the steering wheel from lock to lock with the engine running.

❑ Fill the oil to the correct level in the reservoir (if necessary).

❑ Check that there are no leaks.

❑ Refit:

- the power-assisted steering pump assembly mountings,

K9K, and AIR CONDITIONING

- the front left-hand wheel arch liner (see **Front wheel arch liner: Removal - Refitting**) (55A, Exterior protection),
- the front bumper (see **Front bumper: Removal - Refitting**) (55A, Exterior protection),
- the front left-hand wheel (see **35A**, **Wheels and tyres**, **Wheel: Removal - Refitting**, page **35A-1**) .

K9K, and STANDARD HEATING RECIRCULATION

Special tooling required	
Ms. 583	Pipe clamps.

Tightening torques ▽	
power-assisted steering pump bolts	**21 N.m**
power-assisted steering pump high pressure union	**21 N.m**
power assisted steering pump support bolt on the sump	**21 N.m**
power-assisted steering pump high pressure pipe support mounting bolt	**21 N.m**

REMOVAL

I - REMOVAL PREPARATION OPERATION

❑ Position the vehicle on a two-post lift (see **02A, Lifting equipment, Vehicle: Towing and lifting**).

❑ Remove:

- the front right-hand wheel (see **35A**, **Wheels and tyres**, **Wheel: Removal - Refitting**, page **35A-1**) ,
- the engine undertray,
- the front right-hand wheel arch liner (see **Front wheel arch liner: Removal - Refitting**) (55A, Exterior protection),
- the accessories belt (see **Accessories belt: Removal - Refitting**) (11A, Top and front of engine).

II - OPERATION FOR REMOVAL OF PART CONCERNED

❑ Fit the hose clamps on the hydraulic inlet and outlet pipes of the power assisted steering pump.

❑ Remove the hydraulic input hose clip on the pump using the.

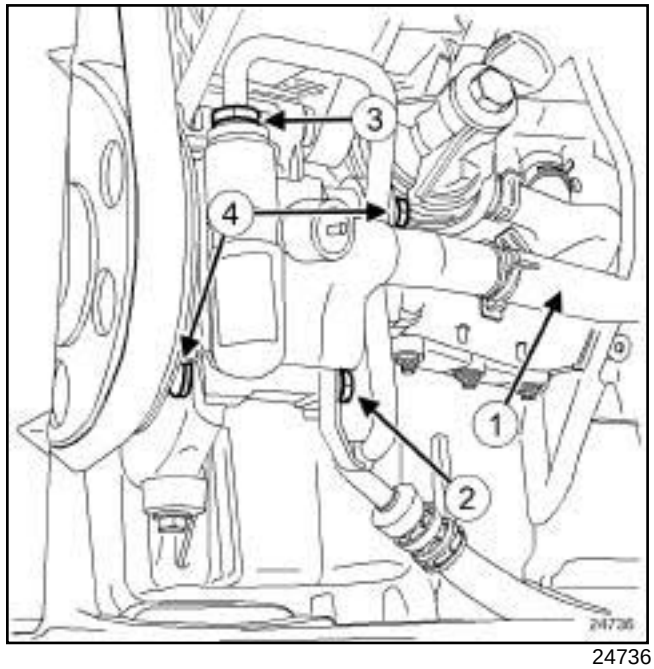

24736

❑ Disconnect the inlet hose (**1**) .

❑ Remove the bolt (**2**) from the high pressure pipe support on the power-assisted steering pump.

❑ Unscrew the power-assisted steering pump high pressure pipe union (**3**) .

❑ Disconnect the power-assisted steering pump high pressure pipe.

❑ Fit plugs to the pipe and power assisted steering pump openings to prevent impurities from entering.

❑ Remove the power-assisted steering pump bolts (**4**) on the multifunction support.

K9K, and STANDARD HEATING RECIRCULATION

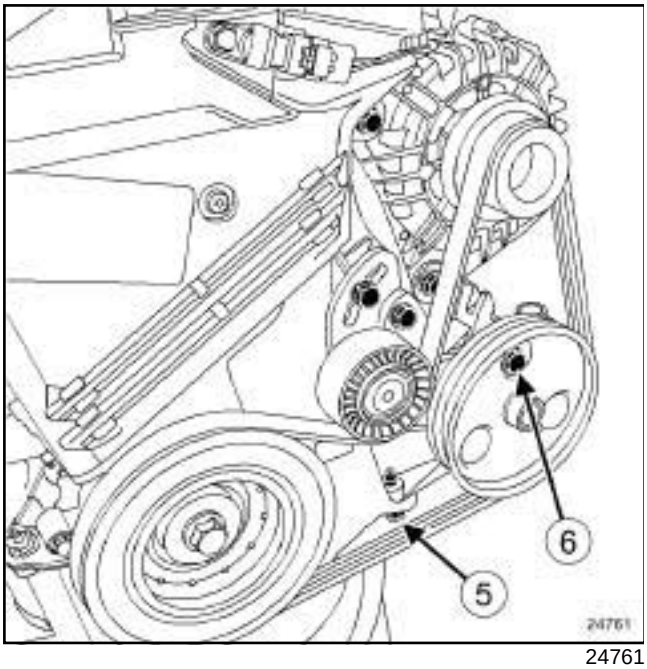

24761

❑ Remove:

- the bolt (**5**) of the power-assisted steering pump support on the sump,
- the power-assisted steering pump bolt (**6**) on the multifunction support,
- the power-assisted steering pump.

REFITTING

I - REFITTING PREPARATION OPERATION

❑

> **WARNING**
> Do not remove the blanking plugs from each component until the last moment.
>
> Also, do not remove the components from their packaging until they are to be fitted to the vehicle.

II - REFITTING OPERATION FOR PART CONCERNED

❑ Refit:

- the power-assisted steering pump,
- the power-assisted steering pump support mounting bolt on the sump.

❑ Remove the plugs from the pipe openings.

❑ Screw the high pressure pipe union on the power-assisted steering pump.

❑ Refit the high pressure pipe support bolt on the power-assisted steering pump.

> Note:
>
> Tighten to torque first the two bolts on the accessories belt side, then the bolts on the other side.

❑ Torque tighten:

- the **power-assisted steering pump bolts (21 N.m)**,
- the **power-assisted steering pump high pressure union (21 N.m)**,
- the **power assisted steering pump support bolt on the sump (21 N.m)**,
- the **power-assisted steering pump high pressure pipe support mounting bolt (21 N.m)**.

❑ Connect the inlet hose on the power-assisted steering pump.

❑ Refit the hydraulic inlet hose clip on the power-assisted steering pump using the.

❑ Remove the hose clamps **(Ms. 583)** on the hydraulic inlet and outlet pipes of the power assisted steering pump.

III - FINAL OPERATION

❑ Refit the accessories belt (11A, Top and front of engine) (see **Accessories belt: Removal - Refitting**) .

❑ Fill the power-assisted steering circuit with **ELF RENAULT MATIC D2** oil (see **Vehicle: Parts and consumables for the repair**) (see 04B, Consumables - Products).

❑ Bleed the circuit by turning the steering wheel from lock to lock with the engine switched off in the first instance.

❑ Bleed the circuit by turning the steering wheel from lock to lock with the engine running.

❑ Top up the fluid in the reservoir.

❑ Check that there are no leaks.

❑ Refit the engine undertray.

K4M, and AIR CONDITIONING

Special tooling required	
Ms. 583	Pipe clamps.

Tightening torques ▽	
power-assisted steering pump bolts on the multi-function support	**21 N.m**
high pressure union on the power-assisted steering pump	**21 N.m**
high pressure pipe bolt on the cylinder block	**21 N.m**
injector rail protector nuts	**21 N.m**

REMOVAL

I - REMOVAL PREPARATION OPERATION

❑ Position the vehicle on a two-post lift (see **02A, Lifting equipment, Vehicle: Towing and lifting**).

❑ Remove:

- the accessories belt (see **11A, Top and front of engine, Accessories belt: Removal - Refitting**),
- the injector rail protector.

> **WARNING**
> Protect the alternator from escaping power assisted steering fluid.

❑ Drain the power-assisted steering fluid reservoir using a syringe.

II - OPERATION FOR REMOVAL OF PART CONCERNED

❑ Fit hose clamps **(Ms. 583)** on the hydraulic inlet and outlet pipes of the power-assisted steering pump.

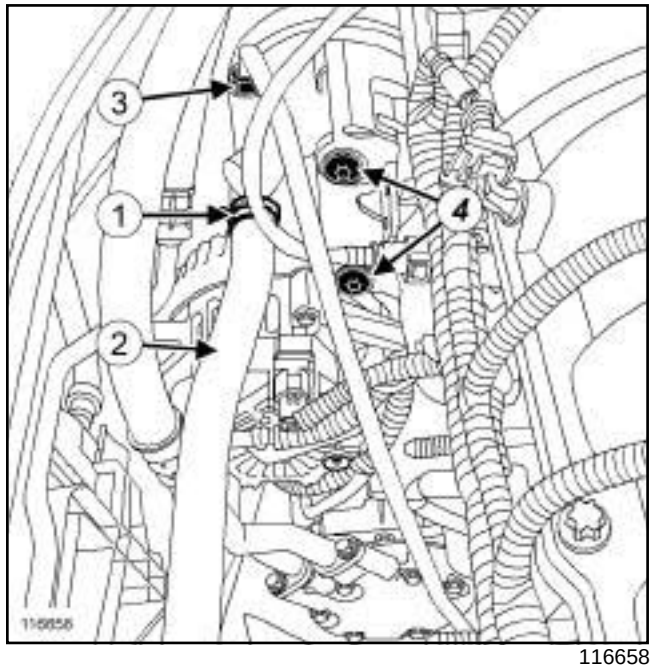

116658

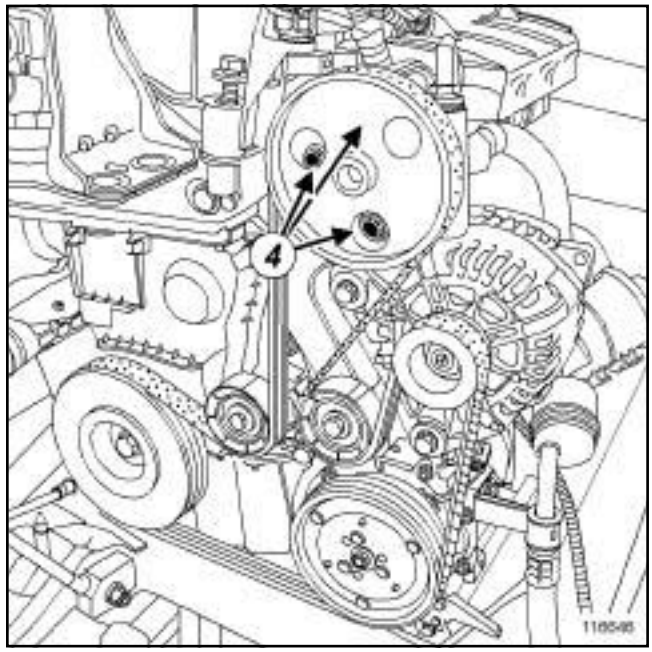

116646

❑ Remove the hydraulic inlet hose clip (**1**) on the power-assisted steering pump using the tool.

❑ Disconnect the inlet hose (**2**) .

❑ Disconnect the pipe connecting the « dehydrator reservoir and the expansion valve » on the motor-driven fan assembly.

❑ Remove:

- the high pressure pipe bolt on the cylinder block,
- the power-assisted steering pump high pressure pipe union (**3**) .

K4M, and AIR CONDITIONING

- ❑ Disconnect the power-assisted steering pump high pressure pipe.
- ❑ Fit plugs to the pipe and power-assisted steering pump openings to prevent impurities from entering.
- ❑ Remove:
  - the bolts ***(4)*** from the power-assisted steering pump on the multifunction support,
  - the power-assisted steering pump towards the motor-driven fan assembly.

REFITTING

I - REFITTING PREPARATION OPERATION

❑

> **WARNING**
> Do not remove the blanking plugs from each component until the last moment.
>
> Also, do not remove the components from their packaging until they are to be fitted to the vehicle.

II - REFITTING OPERATION FOR PART CONCERNED

- ❑ Refit:
  - the power-assisted steering pump,
  - the power-assisted steering pump bolts on the multifunction support.
- ❑ Remove the plugs from the pipe openings.
- ❑ Refit:
  - the high pressure pipe union on the power-assisted steering pump,
  - the high pressure pipe bolt on the cylinder block.
- ❑ Torque tighten:

> Note:
> Tighten to torque first the two bolts on the accessories belt side, then the bolts on the other side.

  - the **power-assisted steering pump bolts on the multifunction support (21 N.m)**,
  - the **high pressure union on the power-assisted steering pump (21 N.m)**,
  - the **high pressure pipe bolt on the cylinder block (21 N.m)**.
- ❑ Clip the pipe connecting the « dehydrator reservoir and the expansion valve » on the motor-driven fan assembly.
- ❑ Connect the inlet hose on the power-assisted steering pump.
- ❑ Refit the hydraulic inlet hose clip on the power-assisted steering pump using the.
- ❑ Remove the hose clamps **(Ms. 583)** from the hydraulic inlet and outlet pipes of the power-assisted steering pump.

K4M, and AIR CONDITIONING

III - FINAL OPERATION

- Refit:
  - the injector rail protector,
  - the accessories belt (see **Accessories belt: Removal - Refitting**) (see 11A, Top and front of engine).
- Torque tighten the **injector rail protector nuts (21 N.m)**.
- Fill the power-assisted steering circuit with **ELF RENAULT MATIC D2** oil (see **Vehicle: Parts and consumables for the repair**) (see 04B, Consumables - Products).
- Bleed the circuit by turning the steering wheel from lock to lock with the engine switched off at first.
- Bleed the circuit by turning the steering wheel from lock to lock with the engine running.
- Top up the level of oil in the reservoir.
- Check that there are no leaks.

K4M, and STANDARD HEATING RECIRCULATION

Special tooling required	
Ms. 583	Pipe clamps.

Tightening torques ▽	
power-assisted steering pump bolts on the multi-function support	**21 N.m**
high pressure pipe union on the power-assisted steering pump	**21 N.m**
high pressure pipe bracket bolt on the cylinder block	**21 N.m**

REMOVAL

I - REMOVAL PREPARATION OPERATION

❑ Position the vehicle on a two-post lift (see **Vehicle: Towing and lifting**) (02A, Lifting equipment).

❑ Disconnect the battery (see **Battery: Removal - Refitting**) (80A, Battery).

❑ Remove:

- the front right-hand wheel (see **35A**, **Wheels and tyres**, **Wheel: Removal - Refitting**, page **35A-1**) ,
- the accessories belt (see **Accessories belt: Removal - Refitting**) (11A, Top and front of engine),
- the engine undertray.

❑ Fit a hose clamp **(Ms. 583)** to the power-assisted steering pump inlet low pressure pipe.

II - OPERATION FOR REMOVAL OF PART CONCERNED

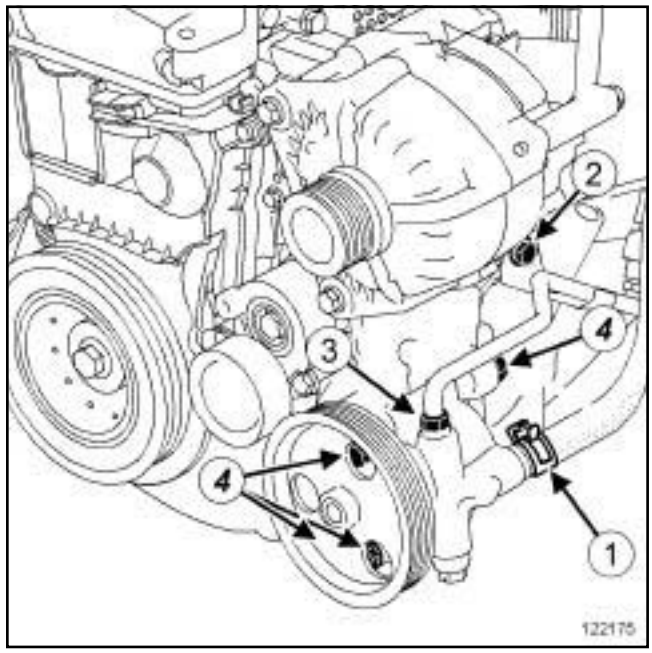

122175

❑ Remove the clip (**1**) from the power-assisted steering pump low pressure pipe using the.

❑ Disconnect the low pressure hydraulic pipe from the power-assisted steering pump.

❑ Remove:

- the high pressure pipe bracket bolt (**2**) on the cylinder block,
- the high pressure pipe union (**3**) from the power-assisted steering pump.

❑ Detach the high pressure pipe from the power-assisted steering pump.

❑ Fit plugs to the pipe and power-assisted steering pump openings to prevent impurities from entering.

❑ Remove:

- the bolts (**4**) from the power-assisted steering pump on the multifunction support,
- the power-assisted steering pump.

K4M, and STANDARD HEATING RECIRCULATION

REFITTING

I - REFITTING PREPARATION OPERATION

❏

> **WARNING**
> Do not remove the blanking plugs from each component until the last moment.
>
> Also, do not remove the components from their packaging until they are to be fitted to the vehicle.

II - REFITTING OPERATION FOR PART CONCERNED

❏ Refit:

- the power-assisted steering pump,
- the power-assisted steering pump bolts on the multifunction support.

❏ Remove the plugs in the pipe openings.

❏ Refit:

- the high pressure pipe union on the power-assisted steering pump,
- the high pressure pipe bracket bolt on the cylinder block.

> Note:
> Torque tighten the bolts on the accessories belt side first, then the bolt on the other side.

❏ Torque tighten:

- the **power-assisted steering pump bolts on the multifunction support (21 N.m)**,
- the **high pressure pipe union on the power-assisted steering pump (21 N.m)**,
- the **high pressure pipe bracket bolt on the cylinder block (21 N.m)**.

❏ Connect the low pressure pipe to the power-assisted steering pump.

❏ Refit the low pressure pipe clip on the power-assisted steering pump using the.

❏ Remove the hose clamp **(Ms. 583)** from the low pressure hydraulic pipe of the power-assisted steering pump.

III - FINAL OPERATION

❏ Refit:

- the engine undertray,
- the accessories belt (see **Accessories belt: Removal - Refitting**) (11A, Top and front of engine),
- the front right-hand wheel (see **35A**, **Wheels and tyres**, **Wheel: Removal - Refitting**, page **35A-1**) .

❏ Fill the power-assisted steering circuit with **ELF RENAULT MATIC D2** oil (see **Vehicle: Parts and consumables for the repair**) (04B, Consumables - Products),

❏ Bleed the circuit by turning the steering wheel from lock to lock with the engine switched off at first.

❏ Bleed the circuit by turning the steering wheel from lock to lock with the engine running.

❏ Top up the fluid in the reservoir.

❏ Check that there are no leaks.

❏ Connect the battery (see **Battery: Removal - Refitting**) (80A, Battery).

REMOVAL

- Remove the power assisted steering pump (see **36B**, **Power assisted steering**, **Power-assisted steering pump: Removal - Refitting**, page **36B-5**) .
- Use the press with a jaw extractor.

REFITTING

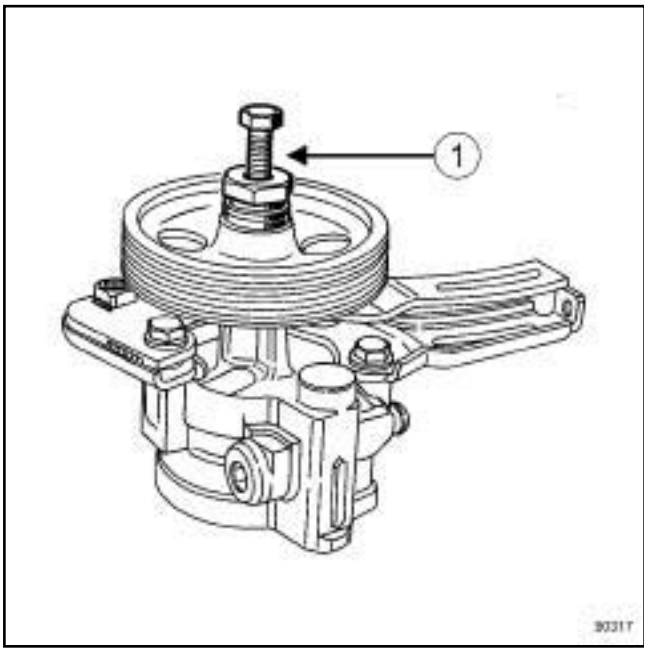

90317

- Fit the pulley using the (**1**) until you reach the measured fitting dimension (lubricate the threading and the pressure point on the pulley thoroughly).

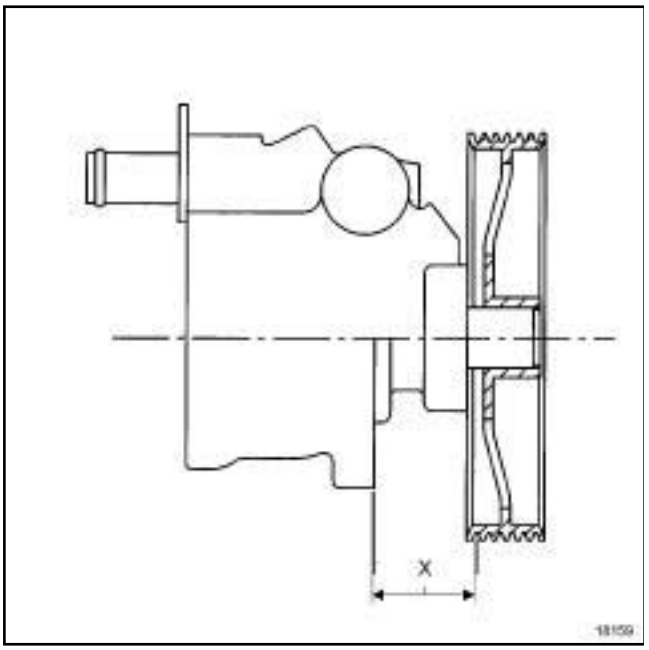

18159

- Follow the pulley fitting dimension measurement, **X=25.4 mm ± 0.4**.

K9K, and AIR CONDITIONING

Special tooling required	
Mot. 1448	Remote operation pliers for hose clips.

Tightening torques ▽	
pump assembly bolts	**21 N.m**
power-assisted steering pump assembly nut	**21 N.m**
high pressure pipe bracket bolt on the pump assembly	**21 N.m**

IMPORTANT
To avoid all risk of damage to the systems, apply the safety and cleanliness instructions and operation recommendations before carrying out any repair (see **36A**, **Steering assembly**, **Steering: Precautions for the repair**, page **36A-2**) .

REMOVAL

I - REMOVAL PREPARATION OPERATION

- ❑ Position the vehicle on a two-post lift (see **Vehicle: Towing and lifting**) (02A, Lifting equipment).
- ❑ Disconnect the battery (see **Battery: Removal - Refitting**) (80A, Battery).
- ❑ Remove:
  - the front left-hand wheel (see **35A**, **Wheels and tyres**, **Wheel: Removal - Refitting**, page **35A-1**) ,
  - the front bumper (see **Front bumper: Removal - Refitting**) (55A, Exterior protection),
  - the front left-hand wheel arch liner (see **Front wheel arch liner: Removal - Refitting**) (55A, Exterior protection).

II - REMOVAL OPERATION

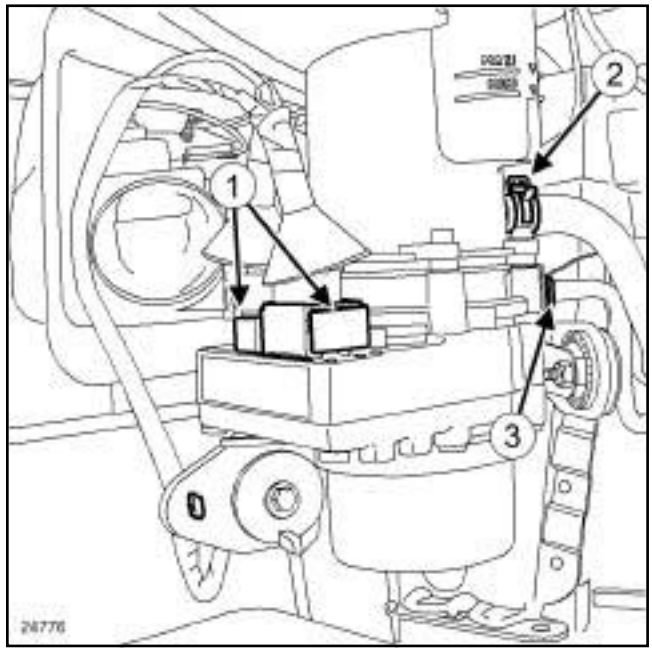

24776

- ❑ Disconnect the pump assembly connectors (**1**) .
- ❑ Undo the low pressure pipe clip (**2**) on the pump assembly reservoir using theor **(Mot. 1448)**.
- ❑ Disconnect the low pressure pipe and drain the pump assembly reservoir.
- ❑ Remove the high pressure pipe bracket bolt (**3**) from the pump assembly.
- ❑ Disconnect the high pressure pipe from the pump assembly.
- ❑ Fit plugs to the pipes and pump assembly openings to prevent any impurities from entering the circuit.

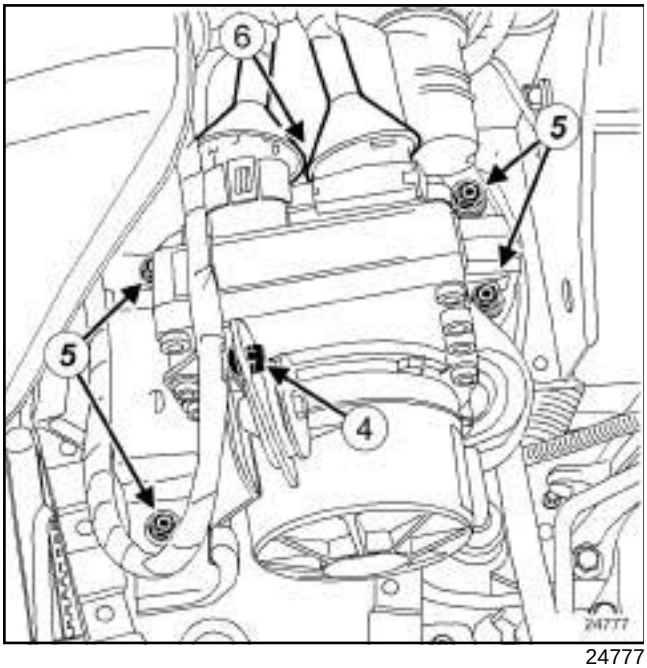

24777

❑ Unclip the power-assisted steering pump assembly wiring at (**4**) .

❑ Remove:

- the bolts (**5**) from the power-assisted steering pump assembly,
- the nut (**6**) ,
- the pump assembly with its mounting.

REFITTING

I - REFITTING PREPARATION OPERATION

❑ Always replace the O-ring of the high pressure pipe.

> Note:
>
> The power-assisted steering pump assembly is sold with its mounting.

II - REFITTING OPERATION FOR PART CONCERNED

❑ Fit the pump assembly with its mounting.

❑ Refit the power-assisted steering pump assembly mounting nut and bolts.

❑ Torque tighten:

- the **pump assembly bolts (21 N.m)**,
- the **power-assisted steering pump assembly nut (21 N.m)**.

❑ Remove the plugs from the pipes and pump assembly openings.

❑ Connect the high pressure pipe fitted with new seals to the pump assembly.

❑ Refit the bolt securing the high pressure pipe bracket on the pump assembly.

❑ Torque tighten the **high pressure pipe bracket bolt on the pump assembly (21 N.m)**.

❑ Connect the low pressure pipe to the pump assembly reservoir using theor **(Mot. 1448)**.

❑ Clip the pump assembly wiring.

❑ Connect the pump assembly connectors.

III - FINAL OPERATION

❑ Fill the power-assisted steering circuit with **ELF RENAULT MATIC D2** oil (see **Vehicle: Parts and consumables for the repair**) (04B, Consumables - Products).

❑ Bleed the circuit by turning the steering wheel from lock to lock with the engine stopped.

❑ Connect the battery (see **Battery: Removal - Refitting**) (80A, Battery).

❑ Bleed the circuit by turning the steering wheel from lock to lock with the engine running.

❑ Fill the oil to the correct level in the reservoir (if necessary).

❑ Check that there are no leaks.

❑ Refit:

- the front left-hand wheel arch liner (see **Front wheel arch liner: Removal - Refitting**) (55A, Exterior protection),
- the front bumper (see **Front bumper: Removal - Refitting**) (55A, Exterior protection),
- the front left-hand wheel (see **35A**, **Wheels and tyres**, **Wheel: Removal - Refitting**, page **35A-1**) .

❑ When replacing the pump assembly, program the power-assisted steering pump assembly computer (see **Fault finding - Replacement of components)** (36B, Power-assisted steering).

K4M

Special tooling required	
Mot. 1448	Remote operation pliers for hose clips.

Tightening torques ▽	
low pressure pipe union on the steering box	**21 N.m**
low pressure pipe bracket bolt on the sub-frame	**21 N.m**
high pressure pipe union on the power-assisted steering pump	**21 N.m**
high pressure pipe union on the steering box	**21 N.m**
high pressure pipe bolt on the steering box	**21 N.m**
high pressure pipe bolt on the gearbox suspended mounting	**21 N.m**

❑

WARNING
Prepare for the flow of fluid, and protect the surrounding components.

REMOVAL

I - REMOVAL PREPARATION OPERATION

❑ Position the vehicle on a two-post lift (see **Vehicle: Towing and lifting**) (02A, Lifting equipment).

❑ Remove the engine undertray.

1 - Low pressure pipe between the power-assisted steering pump and the reservoir

❑ Drain the power-assisted steering fluid reservoir using a syringe.

2 - High pressure pipe between the power-assisted steering pump and the steering box

❑ Fit a hose clamp on the power-assisted steering pump supply pipe.

❑ Remove:

- the front left-hand wheel (see **35A**, **Wheels and tyres**, **Wheel: Removal - Refitting**, page **35A-1**) ,
- the front left-hand wheel arch liner (see **Front wheel arch liner: Removal - Refitting**) (55A, Exterior protection).

3 - Low pressure pipe between the reservoir and the steering box

❑ Drain the power-assisted steering fluid reservoir using a syringe.

❑ Remove:

- the front left-hand wheel (see **35A**, **Wheels and tyres**, **Wheel: Removal - Refitting**, page **35A-1**) ,
- the front left-hand wheel arch liner (see **Front wheel arch liner: Removal - Refitting**) (55A, Exterior protection).

II - OPERATION FOR REMOVAL OF PART CONCERNED

1 - Low pressure pipe between the power-assisted steering pump and the reservoir

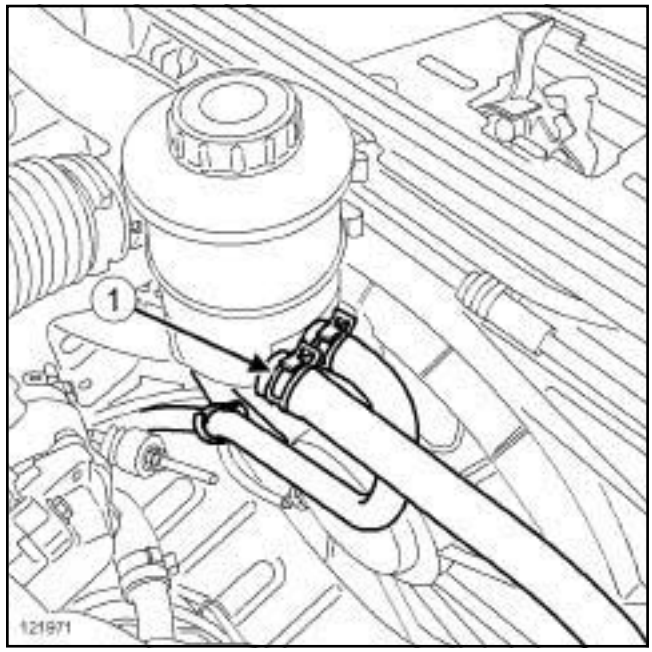

121971

❑ Loosen the low pressure pipe clip (**1**) on the reservoir using tool **(Mot. 1448)**.

❑ Disconnect the low pressure pipe on the reservoir.

K4M

STANDARD HEATING RECIRCULATION

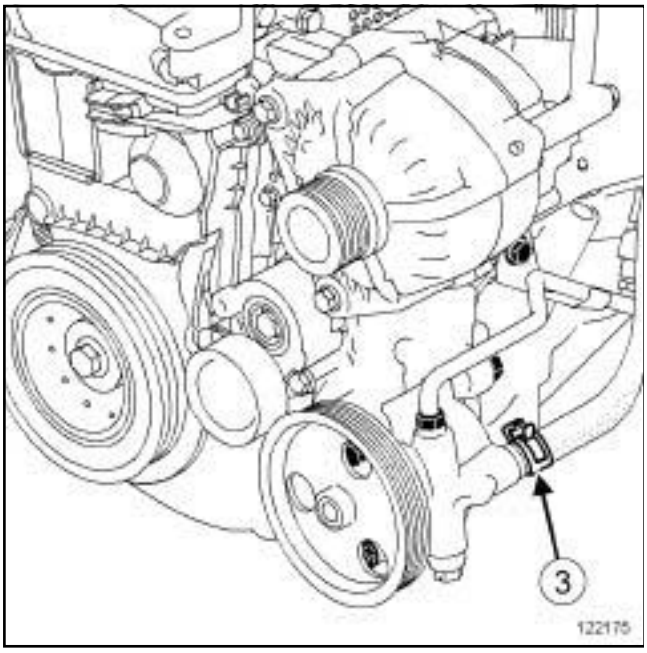

122175

- ❑ Loosen the clip (**3**) using tool **(Mot. 1448)**,
- ❑ Disconnect the low pressure pipe on the power-assisted steering pump.

AIR CONDITIONING

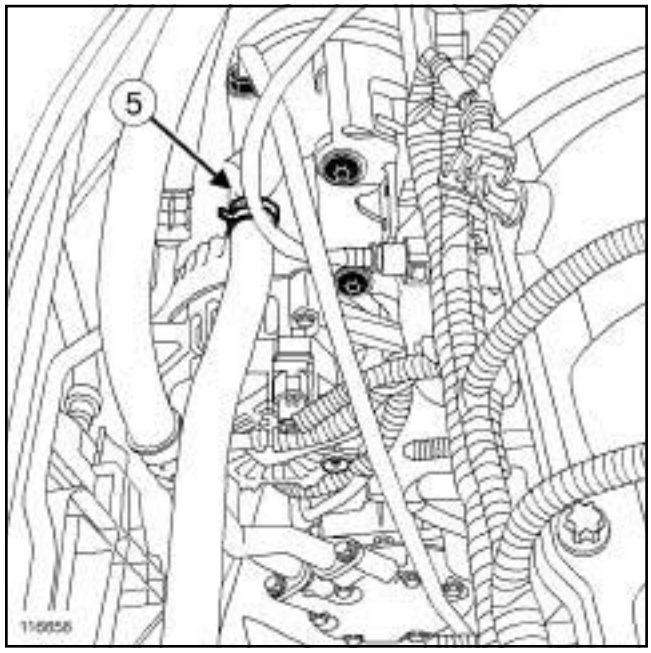

116658

- ❑ Loosen the clip (**5**) using tool **(Mot. 1448)**.
- ❑ Disconnect the low pressure pipe on the power-assisted steering pump.

- ❑ Remove the low pressure pipe between the power-assisted steering pump and the reservoir.

2 - High pressure pipe between the power-assisted steering pump and the steering box

- ❑ Disconnect the pressure switch connector.

K4M

STANDARD HEATING RECIRCULATION

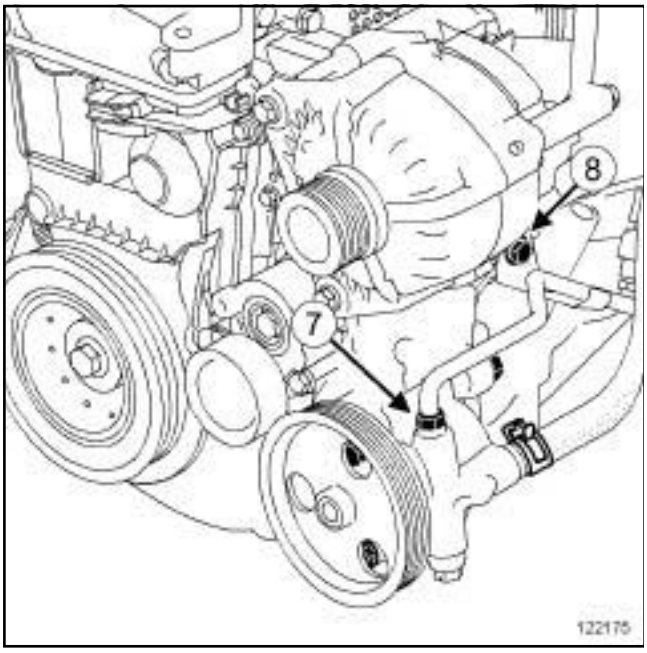

122175

❑ Remove the high pressure pipe bolt (**8**) from the multifunction support.

❑ Remove:

- the high pressure pipe union (**7**) on the power-assisted steering pump,
- the high pressure pipe on the power-assisted steering pump.

AIR CONDITIONING

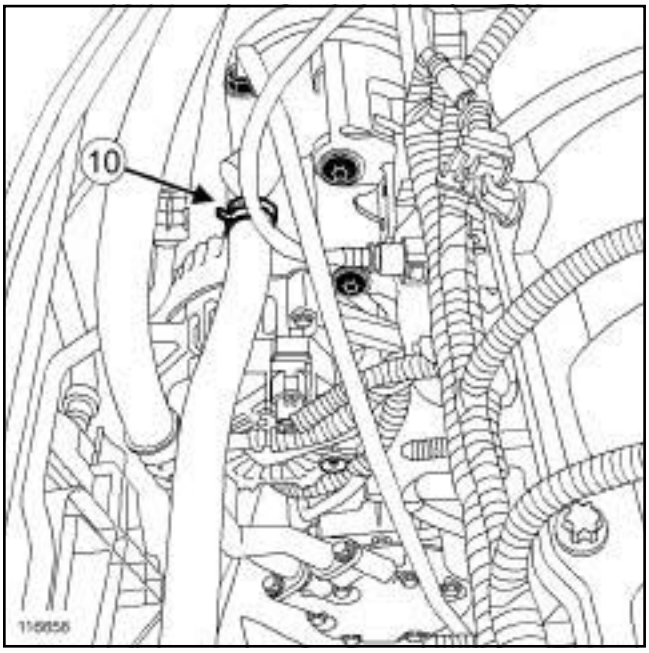

116658

❑ Remove:

- the high pressure pipe union (**10**) on the power-assisted steering pump,
- the high pressure pipe on the power-assisted steering pump.

K4M

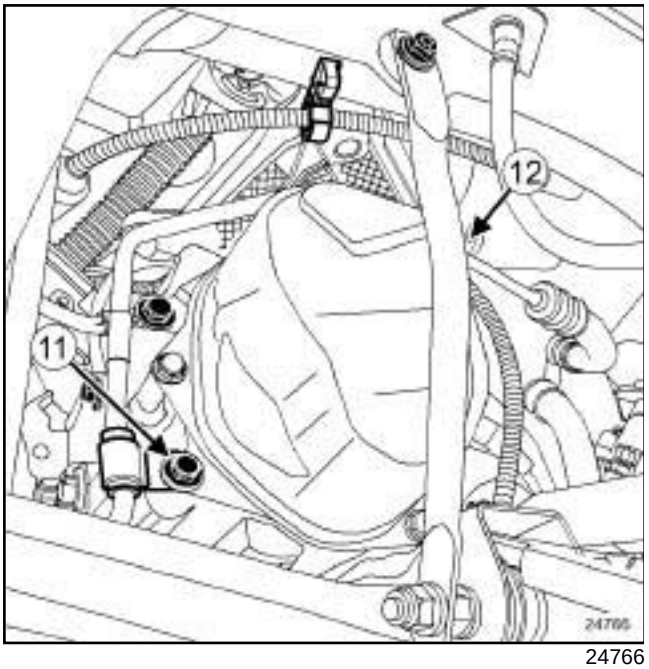

24766

❑ Remove:

- the bolt (**11**) on the high pressure pipe on the gearbox,
- the bolt (**12**) on the high pressure pipe on the gearbox suspended mounting.

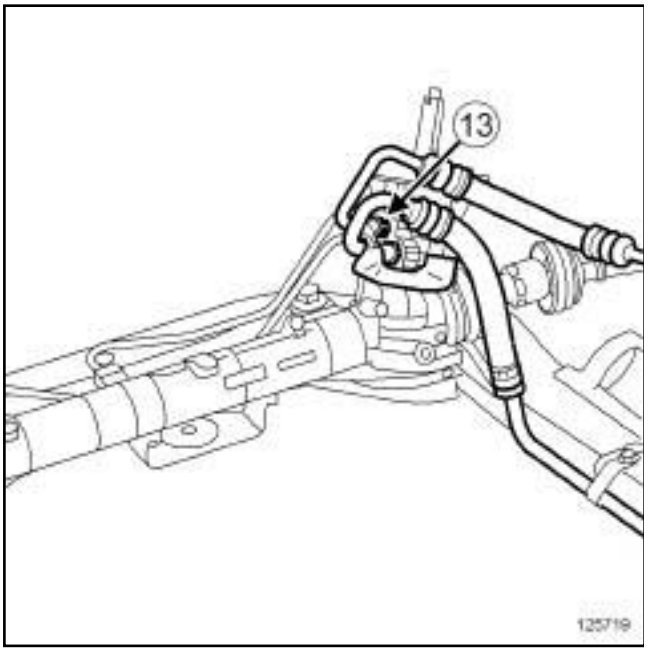

125719

❑ Remove:

- the heat-resistant protector bolts,
- the steering box heat shield,
- the high pressure pipe union (**13**) on the steering box,
- the high pressure pipe on the steering box,
- the power-assisted steering high pressure pipe.

3 - Low pressure pipe between the reservoir and the steering box

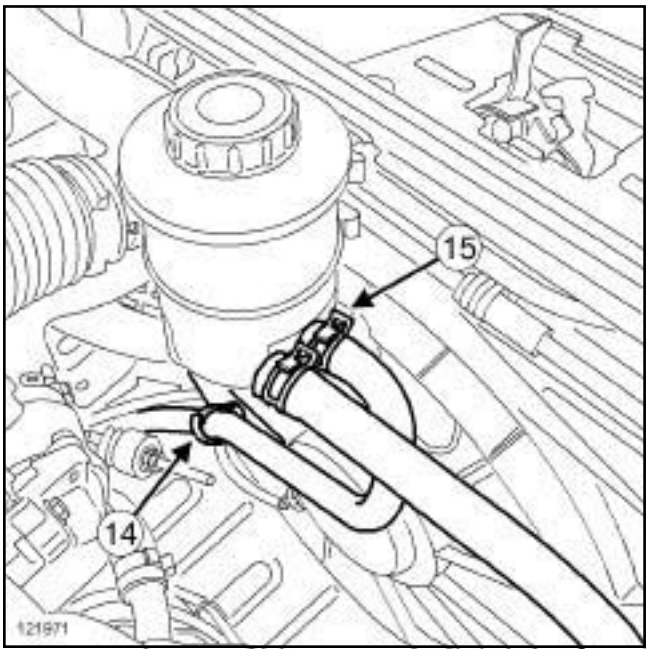

121971

❑ Unclip the low pressure pipe at (**14**) .

❑ Loosen the clip (**15**) using tool **(Mot. 1448)**.

❑ Disconnect the low pressure pipe on the reservoir.

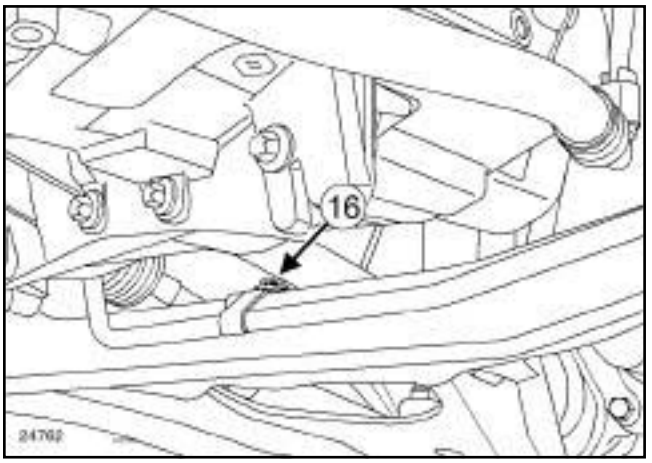

24762

❑ Remove:

- the bolt (**16**) on the low pressure pipe bracket on the sub-frame,
- the heat shield bolts on the steering box,
- the heat shield.

K4M

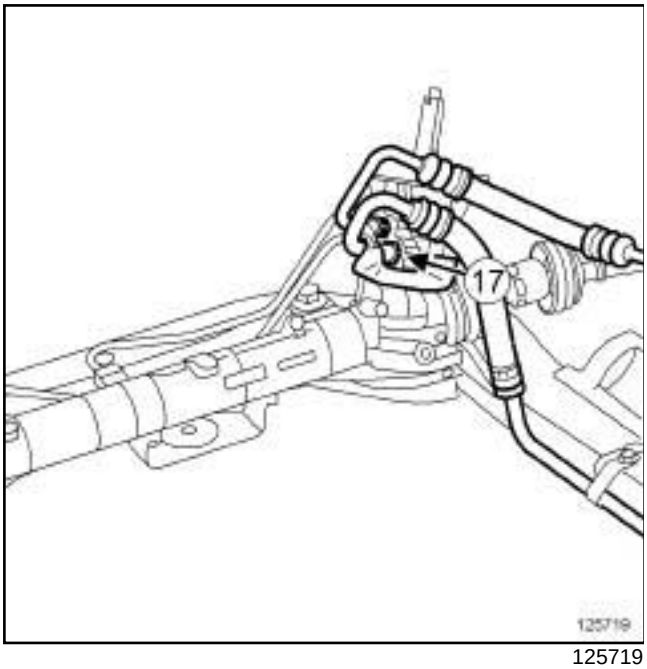

125719

❑ Remove:

- the low pressure pipe union (**17**) on the steering box,
- the low pressure pipe between the reservoir and the steering box.

REFITTING

I - REFITTING PREPARATION OPERATION

❑ Always replace the O-rings on the power-assisted steering pipes.

II - REFITTING OPERATION FOR PART CONCERNED

1 - Low pressure pipe between the reservoir and the steering box

❑ Refit:

- the low pressure pipe between the reservoir and the steering box,
- the low pressure pipe union on the steering box,
- the bolt on the low pressure pipe bracket on the sub-frame,

❑ Torque tighten:

- the **low pressure pipe union on the steering box (21 N.m)**,
- the **low pressure pipe bracket bolt on the sub-frame (21 N.m)**.

❑ Refit:

- the steering box heat shield,
- the heat-resistant protector bolts,
- the low pressure pipe on the reservoir,
- the clip using the **(Mot. 1448)**.

❑ Clip the low pressure pipe onto the fan unit mounting.

2 - High pressure pipe between the power-assisted steering pump and the steering box

❑ Refit:

- the high pressure pipe between the power-assisted steering pump and the steering box,
- the high pressure pipe union on the steering box,
- the high pressure pipe union on the power-assisted steering pump,
- the high pressure pipe bolt on the suspended mounting of the gearbox,
- the high pressure pipe bolt on the gearbox.

❑ Torque tighten:

- the **high pressure pipe union on the power-assisted steering pump (21 N.m)**,
- the **high pressure pipe union on the steering box (21 N.m)**
- the **high pressure pipe bolt on the steering box (21 N.m)**
- the **high pressure pipe bolt on the gearbox suspended mounting (21 N.m)**.

❑ Refit:

- the heat-resistant protector from the steering unit.
- the bolts on the heat shield.

❑ Connect the pressostat connector.

3 - Low pressure pipe between the power-assisted steering pump and the reservoir

❑ Refit:

- the low pressure pipe between the power-assisted steering pump and the reservoir,
- the low pressure pipe to the power-assisted steering pump,
- the low pressure pipe on the reservoir,
- the clips using the **(Mot. 1448)**.

K4M

III - FINAL OPERATION

❏ Refit:

- the front left-hand wheel arch liner (see **Front wheel arch liner: Removal - Refitting**) (55A, Exterior protection),
- the front left-hand wheel (see **35A**, **Wheels and tyres**, **Wheel: Removal - Refitting**, page **35A-1**) ,
- the engine undertray,

❏ Remove the hose clamp.

❏ Fill the power-assisted steering circuit with **ELF RENAULT MATIC D2** oil (see **Vehicle: Parts and consumables for the repair**) (04B, Consumables - Products).

> **WARNING**
> To avoid damaging the power-assisted steering system, do not keep the steering at full lock.

❏ Bleed the circuit by turning the steering wheel from lock to lock with the engine switched off in the first instance.

❏ Bleed the circuit by turning the steering wheel from lock to lock with the engine running.

❏ Top up the power-assisted steering fluid level if necessary.

❏ Check that there are no leaks.

K9K

Special tooling required	
Mot. 1448	Remote operation pliers for hose clips.

Tightening torques ▽	
high pressure pipe union on the steering box	**21 N.m**
high pressure pipe bolts on the gearbox	**21 N.m**
high pressure pipe union on the power-assisted steering pump assembly	**21 N.m**
hi	**gh pressure pipe bolt on the power-assisted steering pump assembly21 N.m**
high pressure pipe union on the power-assisted steering pump	**21 N.m**
high pressure pipe clamp bolt on the power-assisted steering pump	**21 N.m**
low pressure pipe union on the steering box	**21 N.m**

WARNING
Prepare for the flow of fluid, and protect the surrounding components.

REMOVAL

I - REMOVAL PREPARATION OPERATION

❑ Position the vehicle on a two-post lift (see **Vehicle: Towing and lifting**) (02A, Lifting equipment).

❑ Remove:

- the engine cover,
- the engine undertray.

1 - Low pressure pipe between the power-assisted steering pump and the reservoir

STANDARD HEATING RECIRCULATION

❑ Drain the power-assisted steering fluid reservoir using a syringe.

2 - High pressure pipe between the power-assisted steering pump and the steering box

STANDARD HEATING RECIRCULATION

❑ Fit a hose clamp on the power-assisted steering pump supply pipe.

AIR CONDITIONING

❑ Drain the power-assisted steering fluid reservoir using a syringe.

❑ Remove the front bumper (see **Front bumper: Removal - Refitting**) (55A, Exterior protection).

❑ Remove:

- the front left-hand wheel (see **35A**, **Wheels and tyres**, **Wheel: Removal - Refitting**, page **35A-1**) ,
- the front left-hand wheel arch liner (see **Front wheel arch liner: Removal - Refitting**) (55A, Exterior protection).

3 - Low pressure pipe between the power-assisted steering pump and the reservoir

STANDARD HEATING RECIRCULATION

❑ Fit a hose clamp on the power-assisted steering pump supply pipe.

K9K

AIR CONDITIONING

❑ Drain the power-assisted steering fluid reservoir using a syringe.

❑ Remove:

- the front left-hand wheel (see **35A**, **Wheels and tyres**, **Wheel: Removal - Refitting**, page **35A-1**) ,
- the front left-hand wheel arch liner (see **Front wheel arch liner: Removal - Refitting**) (55A, Exterior protection),

II - OPERATION FOR REMOVAL OF PART CONCERNED

1 - Low pressure pipe between the power-assisted steering pump and the reservoir

STANDARD HEATING RECIRCULATION

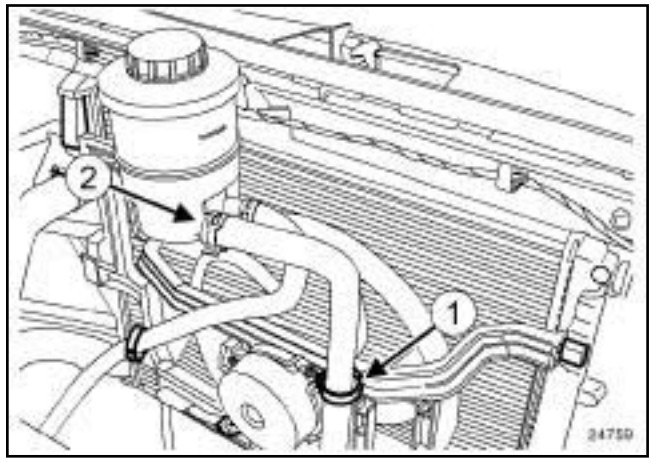

24759

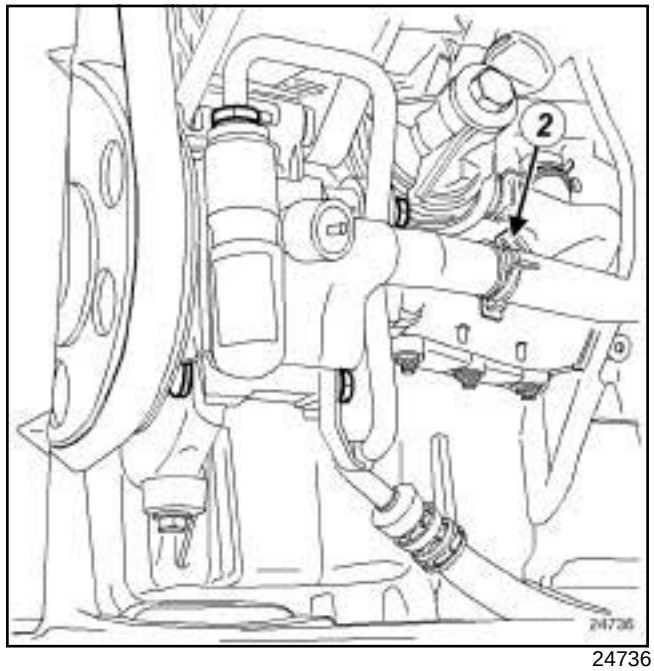

24736

❑ Unclip the low pressure pipe at (**1**) .

❑ Loosen the clips (**2**) using tool **(Mot. 1448)**.

❑ Disconnect the low pressure pipe on the power-assisted steering pump and on the reservoir.

❑ Remove the low pressure pipe.

K9K

2 - High pressure pipe between the power-assisted steering pump and the steering box

STANDARD HEATING RECIRCULATION

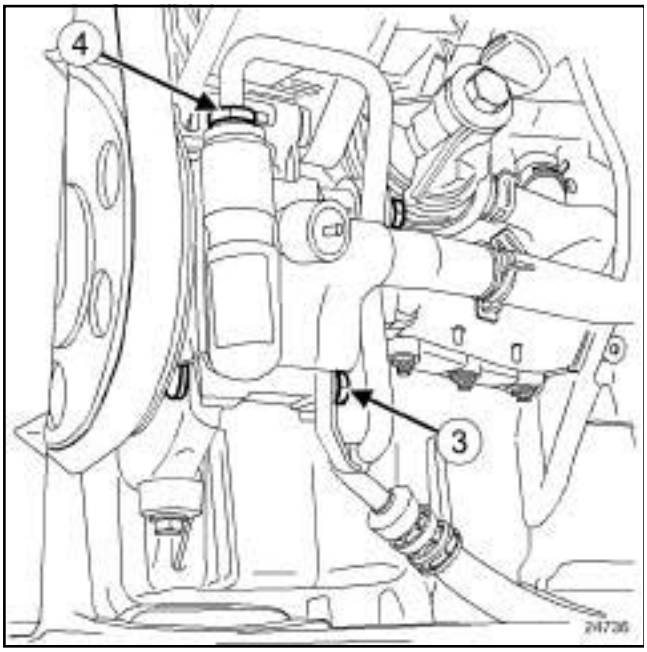

24736

❑ Remove:

- the high pressure pipe clamp bolt (**3**) on the power-assisted steering pump,
- the high pressure pipe union (**4**) .

❑ Disconnect the high pressure pipe on the power-assisted steering pump.

AIR CONDITIONING

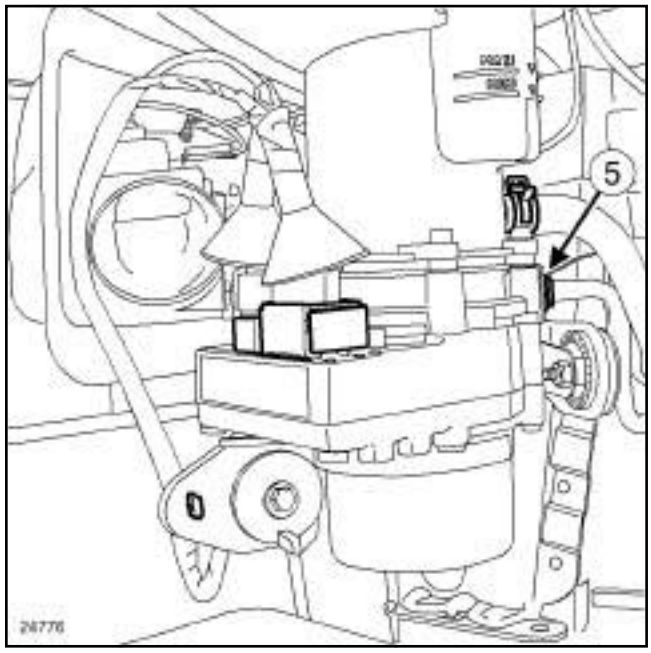

24776

❑ Remove:

- the high pressure pipe bolt (**5**) on the power-assisted steering pump assembly,
- the high pressure pipe on the power-assisted steering pump assembly.

K9K

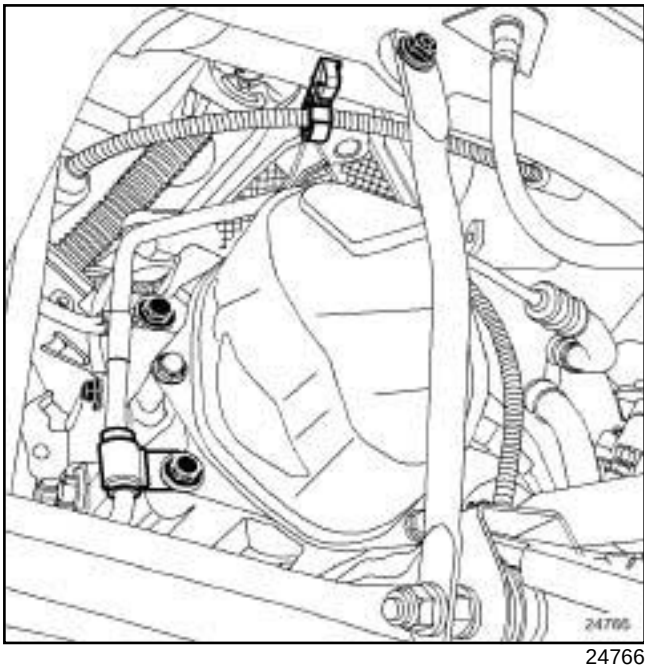

24766

❑ Remove:

- the high pressure pipe bolt (**6**) on the gearbox suspended mounting,
- the bolt (**7**) on the high pressure pipe on the gearbox,
- the heat shield bolts on the steering box,
- the heat shield.

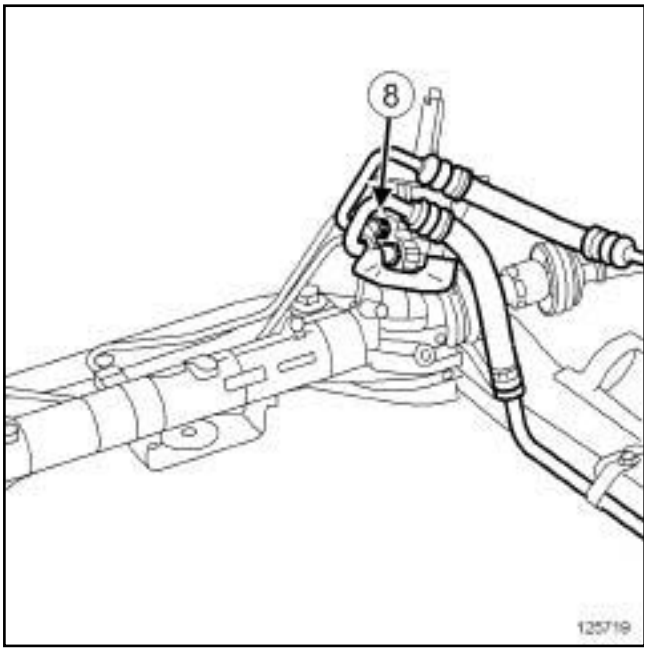

125719

❑ Remove:

- the high pressure pipe union (**8**) on the steering box,
- the high pressure pipe between the power-assisted steering pump and the steering box.

3 - Low pressure pipe between the reservoir and the power-assisted steering box

STANDARD HEATING RECIRCULATION

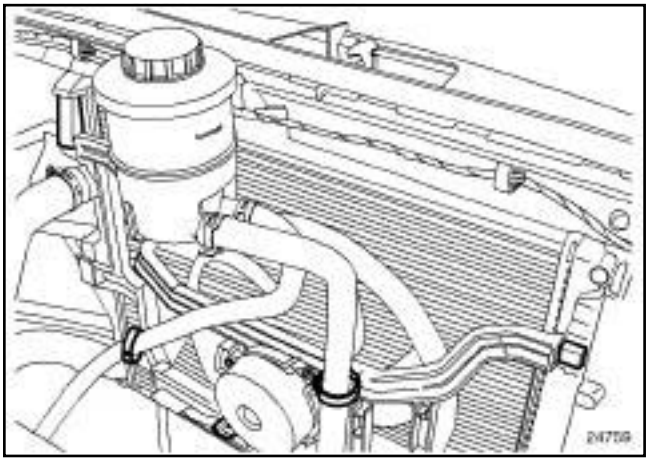

24759

❑ Unclip the low pressure pipe at (**9**) .

❑ Remove:

- the clip (**10**) using the **(Mot. 1448)**,
- the low pressure pipe on the reservoir.

K9K

AIR CONDITIONING

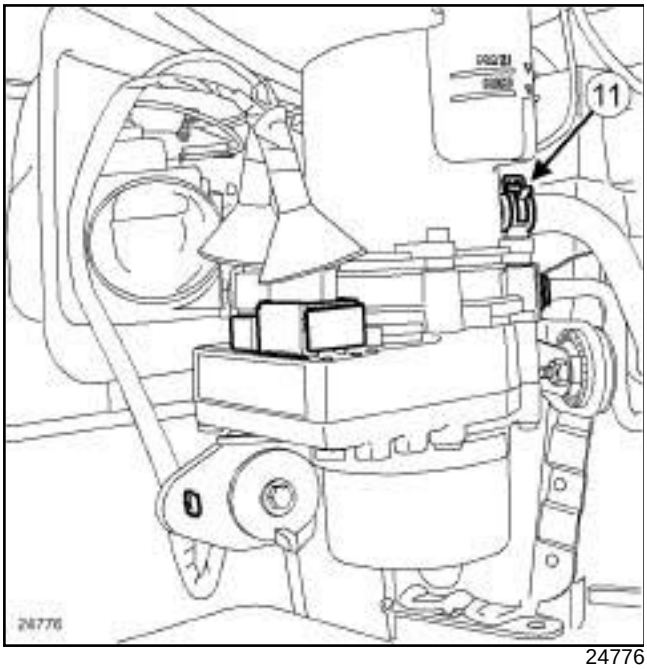

24776

❑ Remove:

- the clip (**11**) using the **(Mot. 1448)**,
- the low pressure pipe on the reservoir.

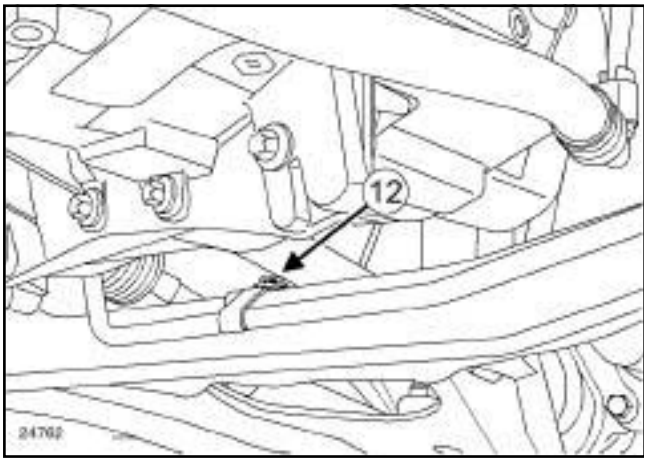

24762

❑ Remove:

- the low pressure pipe clamp (**12**) bolt on the sub-frame,
- the heat shield bolts,
- the heat shield.

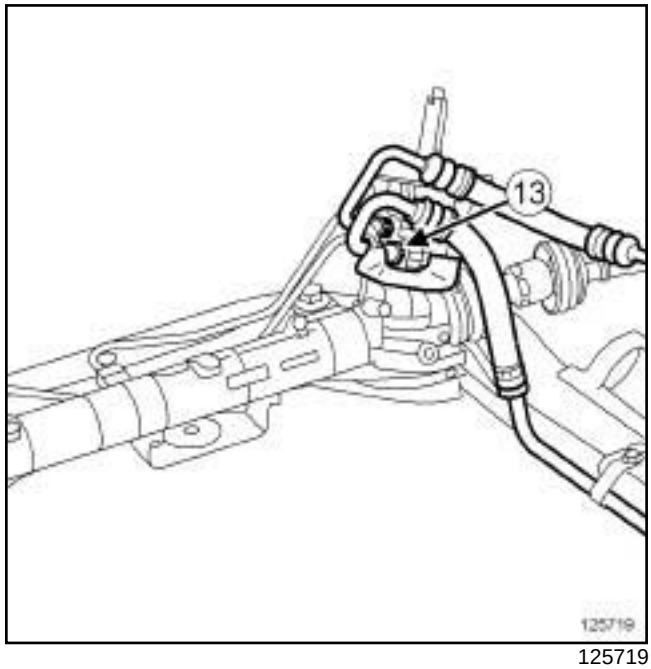

125719

❑ Remove:

- the low pressure pipe union (**13**) on the steering box,
- the low pressure pipe between the reservoir and the steering box.

REFITTING

I - REFITTING PREPARATION OPERATION

❑ Always replace the O-rings on the power-assisted steering pipes.

II - REFITTING OPERATION FOR PART CONCERNED

1 - Low pressure pipe between the reservoir and the power-assisted steering box

❑ Refit:

- the low pressure pipe between the power-assisted steering pump and the reservoir,
- the clips using the **(Mot. 1448)**.

❑ Clip the low pressure pipe onto the fan unit mounting.

K9K

2 - High pressure pipe between the power-assisted steering pump and the steering box

❏ Refit:

- the high pressure pipe between the power-assisted steering pump and the steering box,
- the high pressure pipe union on the steering box.

❏ Torque tighten the **high pressure pipe union on the steering box (21 N.m)**.

❏ Refit the high pressure pipe bolts on the gearbox.

❏ Torque tighten the **high pressure pipe bolts on the gearbox (21 N.m)**.

AIR CONDITIONING

❏ Refit:

- the high pressure pipe on the power-assisted steering pump assembly,
- the high pressure pipe bolt on the power-assisted steering pump assembly.

❏ Torque tighten:

- the **high pressure pipe union on the power-assisted steering pump assembly (21 N.m)**,
- the **hi (gh pressure pipe bolt on the power-assisted steering pump assembly21 N.m)**.

STANDARD HEATING RECIRCULATION

❏ Refit:

- the high pressure pipe union on the power-assisted steering pump,
- the high pressure pipe clamp bolt on the power-assisted steering pump.

❏ Torque tighten:

- the **high pressure pipe union on the power-assisted steering pump (21 N.m)**,
- the **high pressure pipe clamp bolt on the power-assisted steering pump (21 N.m)**.

3 - Low pressure pipe between the reservoir and the steering box

❏ Refit:

- the low pressure pipe between the reservoir and the steering box,
- the low pressure pipe union on the steering box,

❏ Torque tighten the **low pressure pipe union on the steering box (21 N.m)**.

❏ Refit:

- the low pressure pipe on the reservoir,
- the clip using the **(Mot. 1448)**.

STANDARD HEATING RECIRCULATION

❏ Clip the low pressure pipe onto the fan unit mounting.

III - FINAL OPERATION

❏ Refit:

- the front left-hand wheel arch liner (see **Front wheel arch liner: Removal - Refitting**) (55A, Exterior protection),
- the front bumper (see **Front bumper: Removal - Refitting**) (55A, Exterior protection),
- the front left-hand wheel (see **35A**, **Wheels and tyres**, **Wheel: Removal - Refitting**, page **35A-1**) ,
- the engine undertray,
- the engine cover.

❏ Remove the hose clamp.

❏ Fill the power-assisted steering circuit with **ELF RENAULT MATIC D2** oil (see **Vehicle: Parts and consumables for the repair**) (04B, Consumables - Products).

❏ Bleed the circuit by turning the steering wheel from lock to lock with the engine switched off in the first instance.

❏ Bleed the circuit by turning the steering wheel from lock to lock with the engine running.

❏ Top up the power-assisted steering fluid level if necessary.

❏ Check that there are no leaks.

I - SAFETY

1 - Advice to be followed before any operation

For an operation requiring the use of a lift, follow the safety advice (see **Vehicle: Towing and lifting**) (02A, Lifting equipment).

2 - Instructions to be followed during the operation

Using a mixture of two incompatible brake fluids in the brake circuit may give rise to:

- serious risk of leakage due mainly to deterioration of the cups,

- degradation of the ESP system.

To avoid such risks, only ever use brake fluids which comply with the RENAULT standard (see **Vehicle: Parts and consumables for the repair**) (04B, Consumables - Products).

WARNING
Switch off the vehicle ignition so as not to activate the hydraulic unit solenoid valves when bleeding the brake circuit.

Reminder:

- The pipes between the master cylinder, the callipers, and the hydraulic unit are connected using threaded unions with a metric thread.

- Therefore, only parts specified in the Parts Catalogue for this vehicle should be used.

IMPORTANT
To ensure that the ABS and ESP systems operate correctly, check that the underbody brake pipes are clipped in place and are not crossed.

IMPORTANT
To avoid any accident, bring the pistons, brake pads and brake discs into contact by depressing the brake pad several times.

If, during work on the brake system, any damage on any part is observed, it must be repaired before driving the vehicle again.

II - CLEANLINESS

1 - Advice to be followed before any operation

Protect any bodywork components that risk being damaged by brake fluid with a cover.

2 - Instructions to be followed during the operation

To avoid contaminating the brake circuit, do not allow the brake circuit components to drop on the ground.

Clean around the braking system with **BRAKE CLEANER** (see **Vehicle: Parts and consumables for the repair**) (04B, Consumables - Products).

WARNING
Prepare for the flow of fluid, and protect the surrounding components.

III - GENERAL RECOMMENDATIONS

1 - Master cylinder - brake servo

Always replace the master cylinder seals.

Check that the brake servo seal is in place. Replace the seal if it is damaged.

Always replace the master cylinder - brake servo assembly when the master cylinder leaks into the brake servo. The brake servo becomes unusable when the rubber diaphragm is contaminated with brake fluid.

IMPORTANT
To avoid breaking the connection between the brake servo pushrod and the brake pedal, check that the safety clevis pin is locked onto the brake servo pushrod by tilting it from the top downwards.

2 - Brake hose

WARNING

In order not to damage the brake hose:

- do not tension the hose,

- do not twist the hose,

- check that there is no contact with the surrounding components.

LEFT-HAND DRIVE

Tightening torques ▽	
nuts on the brake servo	**21 N.m**
rigid brake pipe unions on the master cylinder	**14 N.m**

WARNING
Prepare for the flow of fluid, and protect the surrounding components.

REMOVAL

I - REMOVAL PREPARATION OPERATION

- ❑ Position the vehicle on a two-post lift (see **Vehicle: Towing and lifting**) (02A, Lifting equipment).
- ❑ Remove the front engine cover (if fitted to the vehicle).
- ❑ Disconnect the battery (see **Battery: Removal - Refitting**) (80A, Battery).

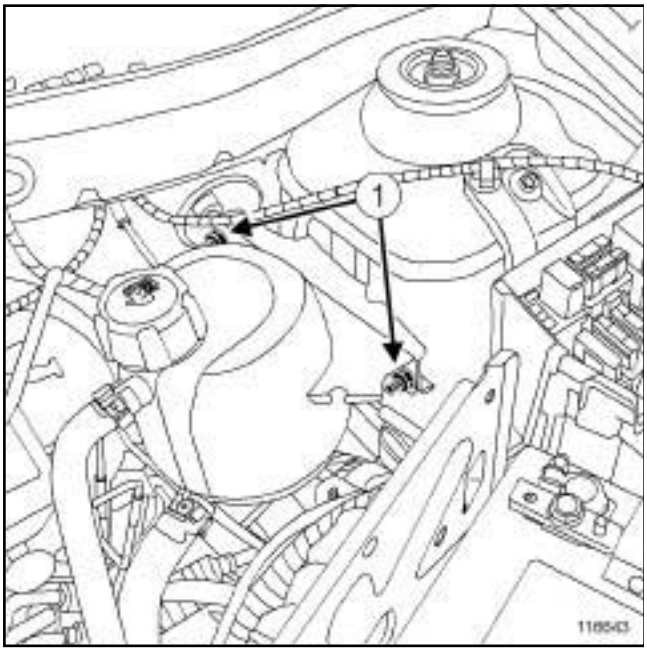

116643

- ❑ Remove the expansion bottle nuts (**1**) .
- ❑ Move aside the expansion bottle, without emptying it.

II - REMOVAL OPERATION

WITHOUT ANTI-LOCK BRAKING SYSTEM

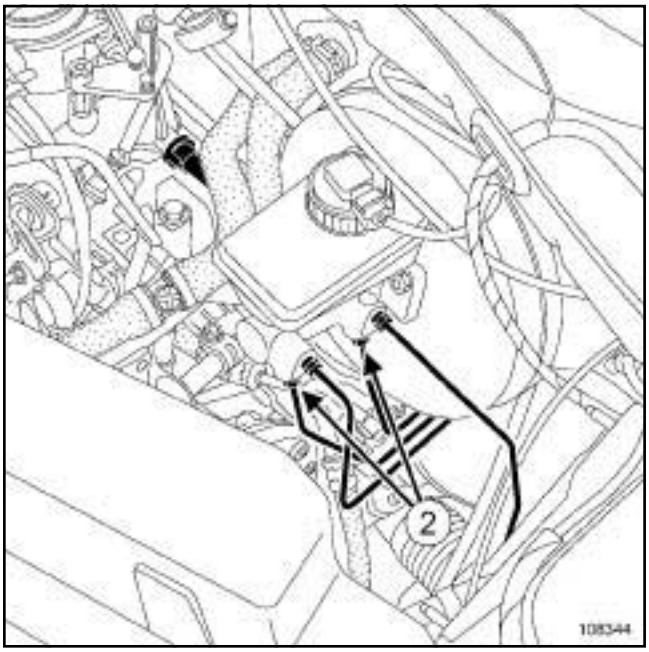

108344

- ❑ Remove the rigid brake pipe unions at (**2**) and mark their position.

LEFT-HAND DRIVE

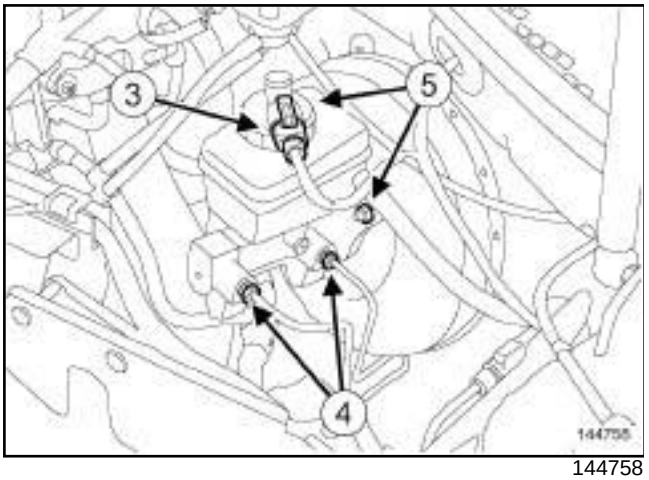

144758

- ❑ Disconnect the brake fluid level sensor connector (**3**) .
- ❑ Remove the brake fluid filler cap.
- ❑ Drain the brake fluid reservoir with a syringe.
- ❑ Place a container under the master cylinder to collect the brake fluid.
- ❑ Disconnect the supply pipe of the clutch master cylinder.
- ❑ Remove:
  - the brake fluid reservoir,
  - the rigid brake pipe unions (**4**) from the master cylinder and mark their position,
- ❑ Remove:
  - the master cylinder nuts on the brake servo ***(5)*** ,
  - the brake master cylinder.
- ❑ Fit blanking plugs on the openings of the master cylinder and the brake pipes.

REFITTING

I - REFITTING PREPARATION OPERATION

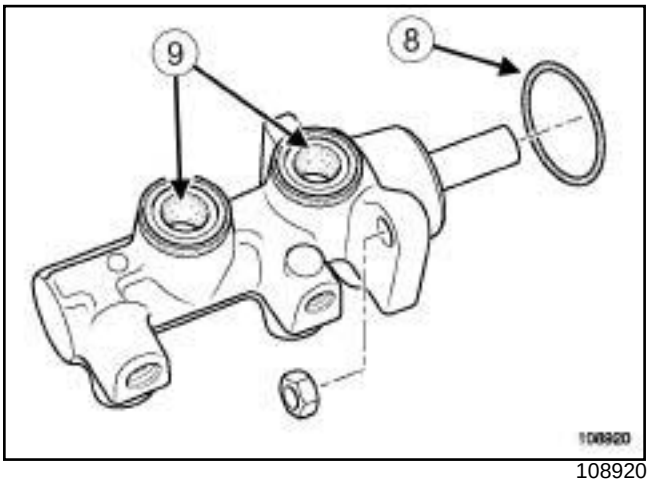

108920

- ❑ **parts always to be replaced: Master cylinder seal on brake fluid reservoir side** (**9**) .
- ❑ **parts always to be replaced: Master cylinder seal on brake servo side** (**8**) .

> Note:
>
> It is essential to replace the master cylinder/ brake servo assembly when the master cylinder leaks into the brake servo.
>
> The brake servo becomes unusable when the rubber membrane is contaminated with brake fluid.

- ❑ Remove the blanking plugs.

LEFT-HAND DRIVE

II - REFITTING OPERATION

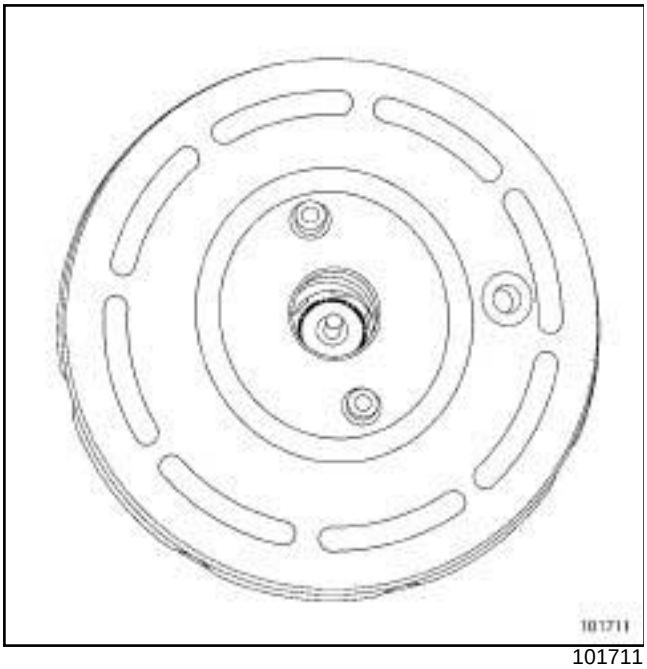

101711

- ❑ Line up the master cylinder with the brake servo so that the pushrod goes into the master cylinder housing.
- ❑ Torque tighten the **nuts on the brake servo (21 N.m)**.
- ❑ Refit the rigid brake pipe unions.
- ❑ Torque tighten the **rigid brake pipe unions on the master cylinder (14 N.m)**.
- ❑ Snap the brake fluid reservoir onto the master cylinder correctly at ***(9)*** .
- ❑ Connect the brake fluid level sensor connector.

III - FINAL OPERATION

- ❑ Refit the expansion bottle.
- ❑ Connect the battery (see **Battery: Removal - Refitting**) (80A, Battery).
- ❑ Refit the front engine cover (if fitted to the vehicle).
- ❑ Perform the following operations:
  - fill up the brake fluid reservoir,
  - bleed the brake circuit (see **30A**, **General information**, **Braking circuit: Bleed**, page **30A-4**) ,
  - bleed the clutch circuit (see **37A**, **Mechanical component controls**, **Clutch circuit: Bleed**, page **37A-37**) .

LEFT-HAND DRIVE, and WITHOUT ANTI-LOCK BRAKING SYSTEM

Equipment required
pedal press

Tightening torques ▽	
brake pipe union on the master cylinder	**14 N.m**
brake pipe union on the brake hose	**14 N.m**

REMOVAL

REMOVAL PREPARATION OPERATION

❑ Position the vehicle on a two-post lift (see **Vehicle: Towing and lifting**) (02A, Lifting equipment).

❑ Fit a **pedal press** to the brake pedal to limit outflow.

❑ Remove:

- the front right-hand wheel (see **35A**, **Wheels and tyres**, **Wheel: Removal - Refitting**, page **35A-1**) .
- the front engine cover (if fitted to the vehicle).

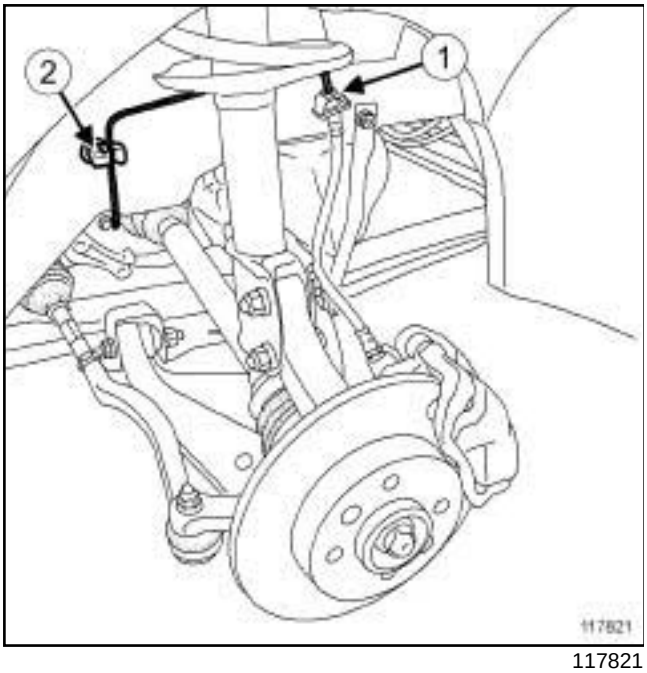

117821

❑ Unscrew the brake pipe union (**1**) on the brake hose.

❑ Remove the brake pipe from the retaining bracket.

❑ Unclip the brake pipe from its clip (**2**) .

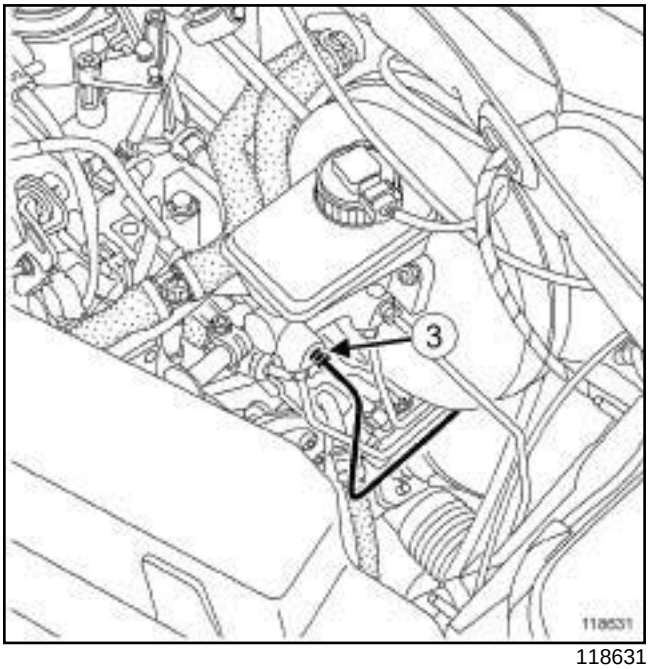

118631

❑ Unscrew the brake pipe union (**3**) from the master cylinder.

❑ Remove the soundproofing clips on the bulkhead (if fitted to the vehicle).

❑ Move aside the soundproofing (if fitted to the vehicle).

❑ Unclip the brake pipe from its clip.

❑ Remove the brake pipe between the master cylinder and the front right-hand brake hose.

REFITTING

I - REFITTING OPERATION FOR PART CONCERNED

❑ Refit the brake pipe between the master cylinder and the front right-hand brake hose.

❑ Refit the brake pipe on the retaining bracket.

❑ Clip the brake pipe into its clip.

❑ Screw the brake pipe union on the front right-hand brake hose.

❑ Screw the brake pipe union on the master cylinder.

❑ Torque tighten:

- the **brake pipe union on the master cylinder (14 N.m)**,
- the **brake pipe union on the brake hose (14 N.m)**.

LEFT-HAND DRIVE, and WITHOUT ANTI-LOCK BRAKING SYSTEM

II - FINAL OPERATION

❏ Refit:

- the soundproofing on the bulkhead (if fitted to the vehicle).
- the soundproofing clips,
- the front engine cover (if fitted to the vehicle),
- the front right-hand wheel (see **35A**, **Wheels and tyres**, **Wheel: Removal - Refitting**, page **35A-1**) .

❏ Remove the **pedal press**.

❏ Bleed the brake circuit (see **30A**, **General information**, **Braking circuit: Bleed**, page **30A-4**) .

LEFT-HAND DRIVE, and WITHOUT ANTI-LOCK BRAKING SYSTEM

Equipment required
pedal press

Tightening torques ▽	
brake pipe union on the master cylinder	**14 N.m**
brake pipe union on the brake hose	**14 N.m**

REMOVAL

I - REMOVAL PREPARATION OPERATION

❏ Position the vehicle on a two-post lift (see **Vehicle: Towing and lifting**) (02A, Lifting equipment).

❏ Fit a **pedal press** to the brake pedal to limit outflow.

❏ Remove:

- the front left-hand wheel (see **35A**, **Wheels and tyres**, **Wheel: Removal - Refitting**, page **35A-1**) ,
- the front engine cover (if fitted to the vehicle).

II - OPERATION FOR REMOVAL OF PART CONCERNED

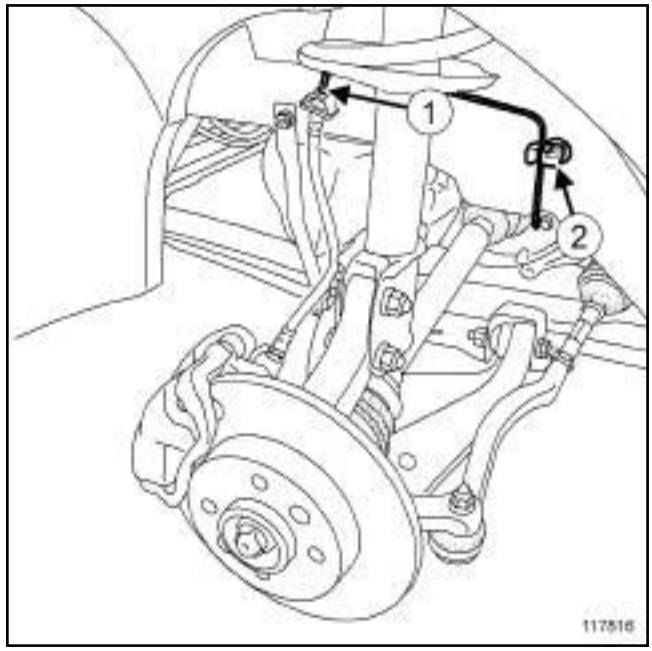

117816

❏ Unscrew the brake pipe union (**1**) from the brake hose.

❏ Remove the brake pipe from the retaining bracket.

❏ Unclip the brake pipe from its clip (**2**) .

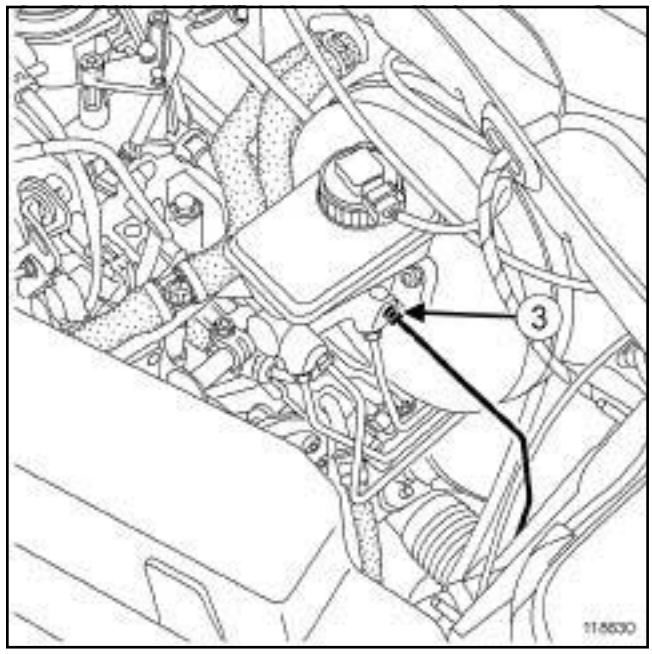

118630

❏ Unscrew the brake pipe union (**3**) from the master cylinder.

❏ Remove the brake pipe between the master cylinder and the front left-hand brake hose.

LEFT-HAND DRIVE, and WITHOUT ANTI-LOCK BRAKING SYSTEM

REFITTING

I - REFITTING STAGE FOR THE PART IN QUESTION

- ❑ Refit the brake pipe between the master cylinder and the front left-hand brake hose.
- ❑ Refit the brake pipe on the retaining bracket.
- ❑ Clip the brake pipe into its clip.
- ❑ Screw the brake pipe union on the front left-hand brake hose.
- ❑ Screw the brake pipe union on the master cylinder.
- ❑ Torque tighten:
  - the **brake pipe union on the master cylinder (14 N.m)**,
  - the **brake pipe union on the brake hose (14 N.m)**.

II - FINAL OPERATION

- ❑ Refit:
  - the front engine cover (if fitted to the vehicle),
  - the front left-hand wheel (see **35A**, **Wheels and tyres**, **Wheel: Removal - Refitting**, page **35A-1**) .
- ❑ Bleed the brake circuit (see **30A**, **General information**, **Braking circuit: Bleed**, page **30A-4**) .

LEFT-HAND DRIVE

REMOVAL

I - REMOVAL PREPARATION OPERATION

K9K

❑ Remove the engine cover.

II - OPERATION FOR REMOVAL OF PART CONCERNED

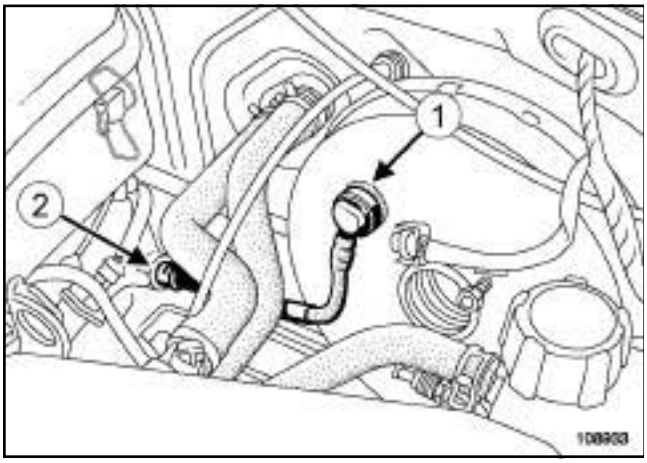

108933

❑ Disconnect the non-return valve at (**1**) on the brake servo.

❑ Pull and turn the non-return valve to release it from the rubber sealing washer.

K9K

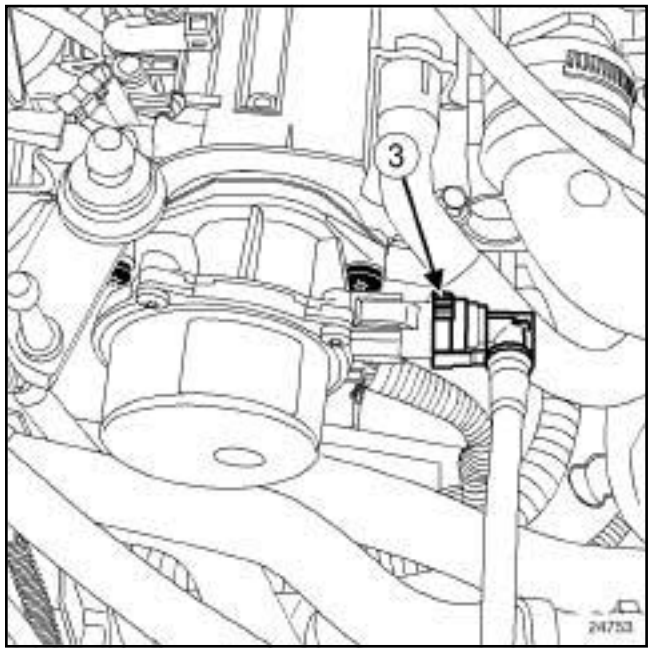

24753

❑ Disconnect the non-return valve at (**3**) on the vacuum pump.

LEFT-HAND DRIVE

K4M

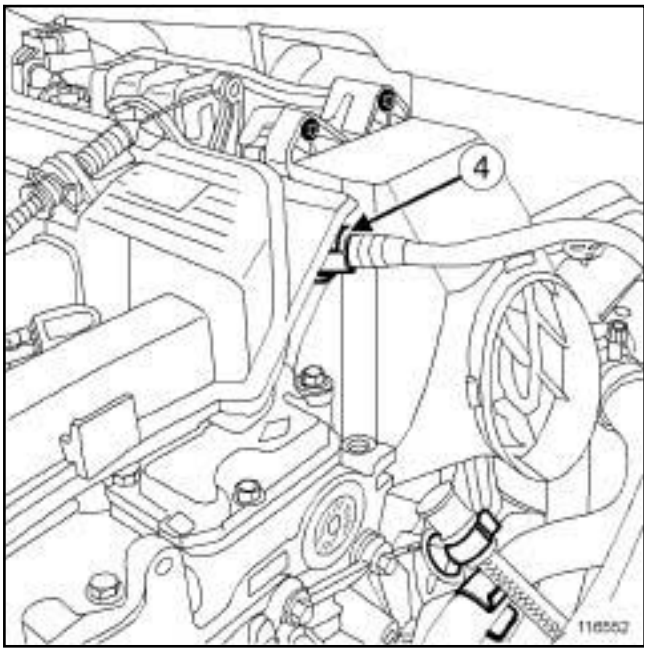

116552

❑ Disconnect the non-return valve at (**4**) on the inlet distributor.

❑ Remove the non-return valve.

REFITTING

I - REFITTING PREPARATION OPERATION

❑ Check the condition of the sealing washer and the non-return valve.

❑ Replace any faulty parts.

II - REFITTING OPERATION FOR PART CONCERNED

❑ Fit the non-return valve.

K4M

❑ Connect the non-return valve to the inlet distributor.

K9K

❑ Connect the non-return valve at the vacuum pump,

❑ Connect the non-return valve to the brake servo.

III - FINAL OPERATION

K9K

❑ Refit the engine cover.

LEFT-HAND DRIVE

Tightening torques ▽	
brake servo nuts	**21 N.m**

IMPORTANT
To avoid a loss of braking efficiency, do not bend the brake servo pipe.

WARNING
Prepare for the flow of fluid, and protect the surrounding components.

REMOVAL

I - REMOVAL PREPARATION OPERATION

❑ Position the vehicle on a two-post lift (see **Vehicle: Towing and lifting**) (02A, Lifting equipment).

❑ Disconnect the battery (see **Battery: Removal - Refitting**) (80A, Battery).

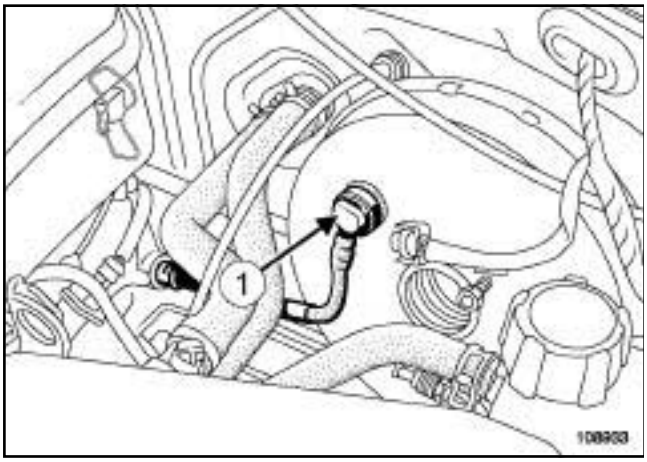

108933

❑ Remove:

- the master cylinder (see **37A**, **Mechanical component controls**, **Master cylinder: Removal - Refitting**, page **37A-2**) ,
- the non-return valve (**1**) at the servo.

II - REMOVAL OPERATION

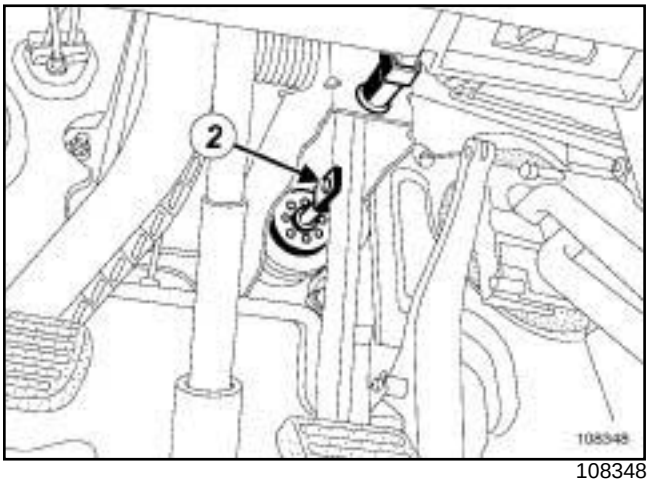

108348

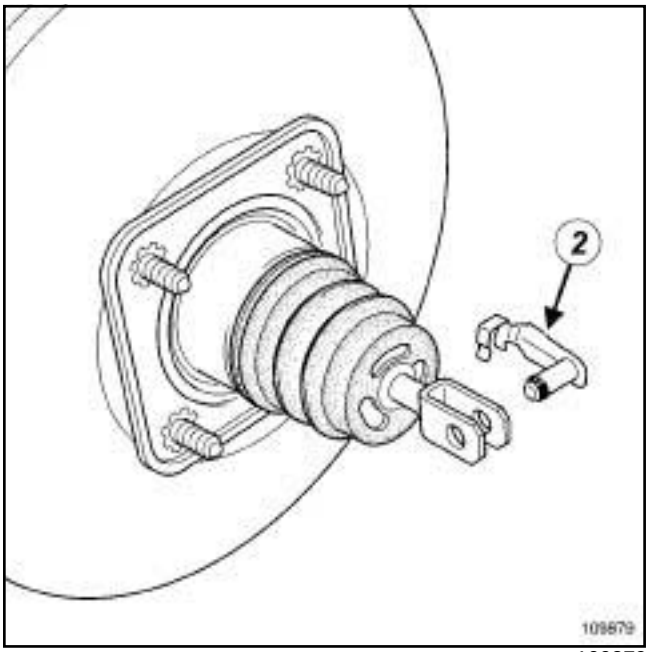

109879

❑ Tilt the connecting piece upwards and remove the safety clevis pin (**2**) between the brake servo push-rod and the brake pedal on the passenger compartment side.

LEFT-HAND DRIVE

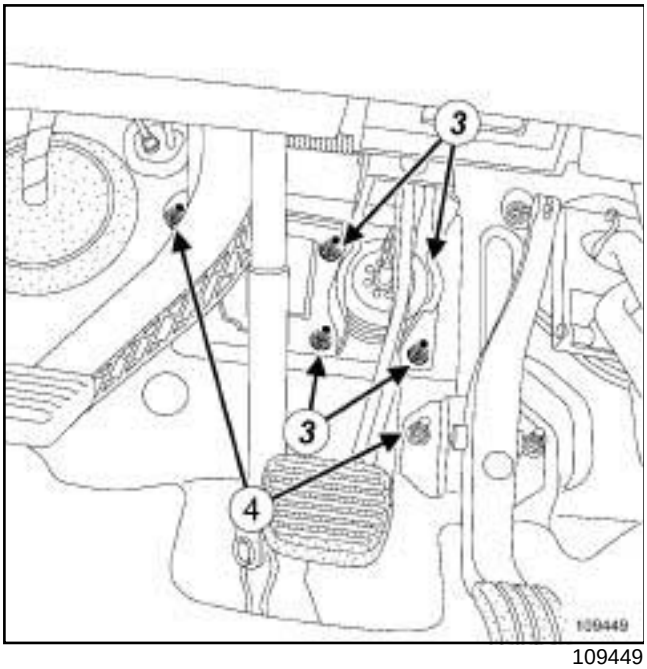

109449

❑ Remove the special nuts (**4**) for the insulating foam.

❑ Gently move the insulating foam aside.

❑ Remove:

- the brake servo nuts (**3**) , on the passenger compartment side (the nuts mounting the pedal mounting to the servo),
- the brake servo.

REFITTING

I - REFITTING PREPARATION OPERATION

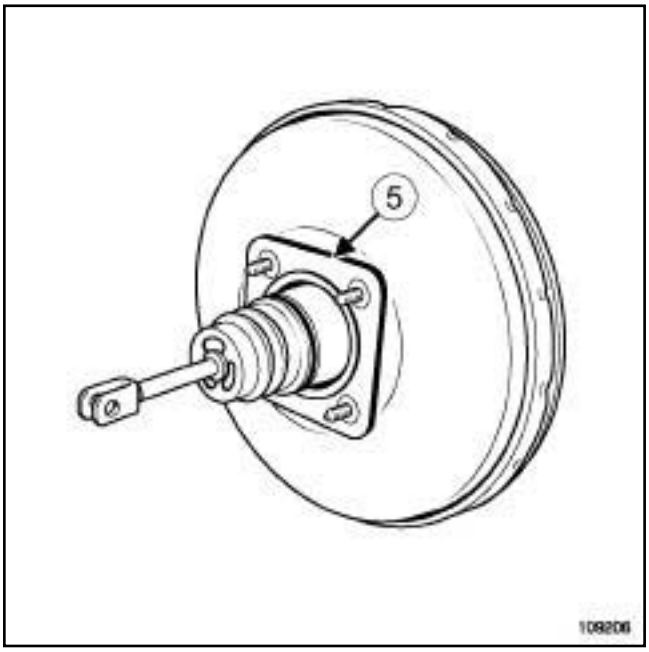

109206

❑ Check that the brake servo seal (**5**) is present; replace the seal if it is faulty.

❑ **parts always to be replaced: Connecting shaft between the brake pedal and the brake servo pushrod**.

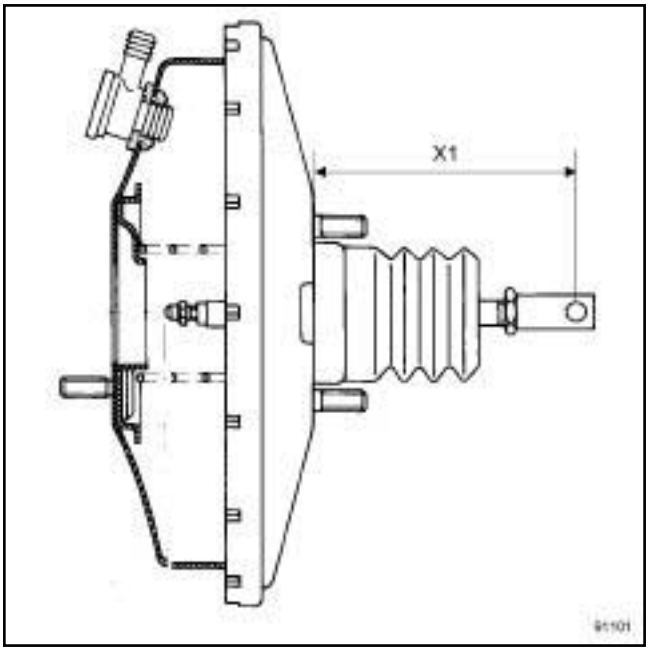

91101

❑ Before refitting, check the following dimension (**X1**) = **144.5 mm ± 0.5**.

LEFT-HAND DRIVE

II - REFITTING OPERATION

- Refit the brake servo.
- Torque tighten the **brake servo nuts (21 N.m)**.
- The shaft connecting the brake servo pushrod and the brake pedal must be refitted from right to left, and from top to bottom.
- Refit:
  - the insulating foam,
  - the special nuts for the insulating foam.

III - FINAL OPERATION

- Refit:
  - the non-return valve at the brake servo,
  - the master cylinder (see **37A**, **Mechanical component controls**, **Master cylinder: Removal - Refitting**, page **37A-2**) .

> **IMPORTANT**
> To avoid breaking the connection between the brake servo pushrod and the brake pedal, check that the safety clevis pin is locked onto the brake servo pushrod by tilting it from the top downwards.

- Adjust the brake light switch (see **37A**, **Mechanical component controls**, **Brake pedal: Removal - Refitting**, page **37A-26**) .
- Connect the battery (see **Battery: Removal - Refitting**) (80A, Battery).

K9K

Tightening torques ▽	
the vacuum pump bolts	**21 N.m**

REMOVAL

I - REMOVAL PREPARATION OPERATION

❑ Remove:

- the engine cover
- the air inlet duct.

❑ Gently move the air filter box aside to access the vacuum pump.

II - REMOVAL OPERATION

K9K, and 796

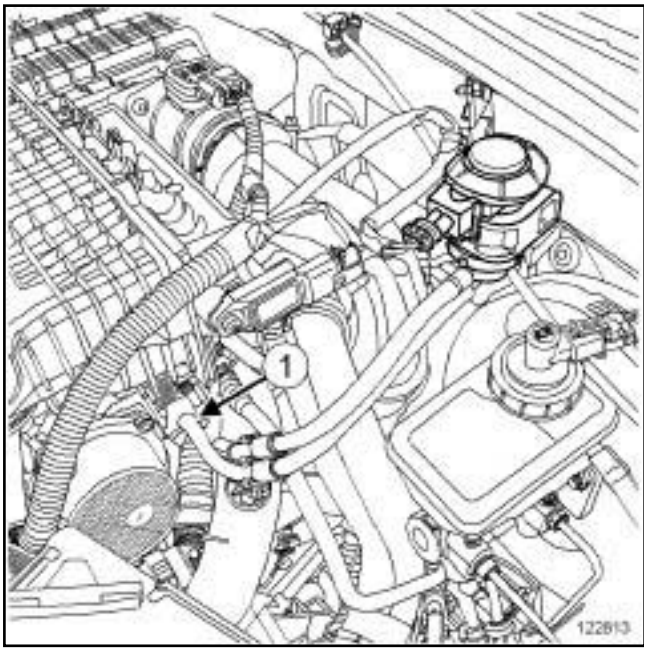

122813

❑ Disconnect the turbocharger control solenoid valve pipe (**1**) from the vacuum pump.

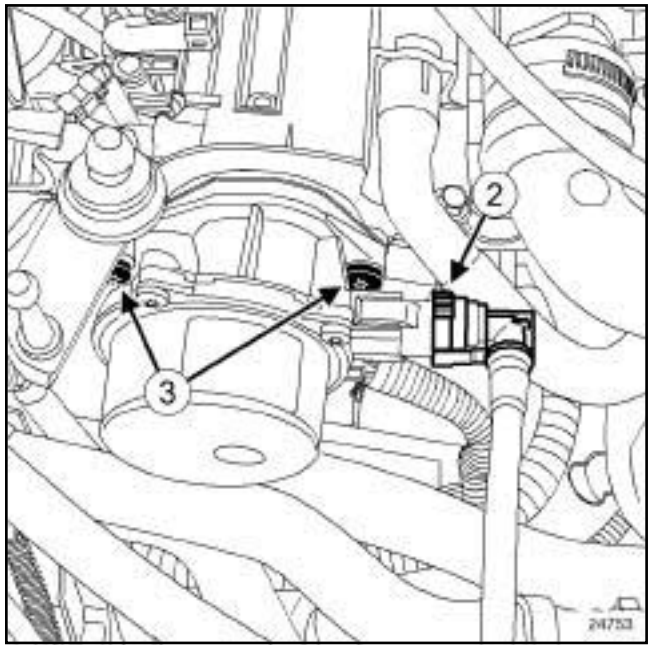

24753

❑ Disconnect the non-return valve (**2**) from the vacuum pump.

❑ Remove:

- the vacuum pump bolts (**3**) on the cylinder head,
- the vacuum pump.

REFITTING

I - REFITTING PREPARATION OPERATION

❑ Clean the vacuum pump bearing surface on the cylinder head.

❑ **parts always to be replaced: Brake servo vacuum pump seal**.

II - REFITTING OPERATION

❑ Refit:

- the vacuum pump fitted with a new seal,
- the vacuum pump bolts.

❑ Torque tighten **the vacuum pump bolts (21 N.m)** on the cylinder head.

❑ Connect the non-return valve to the vacuum pump.

K9K, and 796

❑ Connect the turbocharger control solenoid valve pipe to the vacuum pump.

K9K

III - FINAL OPERATION

❑ Refit:

- the air filter unit,
- the air inlet duct,
- the engine cover.

LEFT-HAND DRIVE

Tightening torques ▽	
pedal yoke nuts	**21 N.m**

REMOVAL

I - REMOVAL PREPARATION OPERATION

❑ Remove the brake pedal switch (see **37A**, **Mechanical component controls**, **Brake pedal switch: Removal - Refitting**, page **37A-27**) .

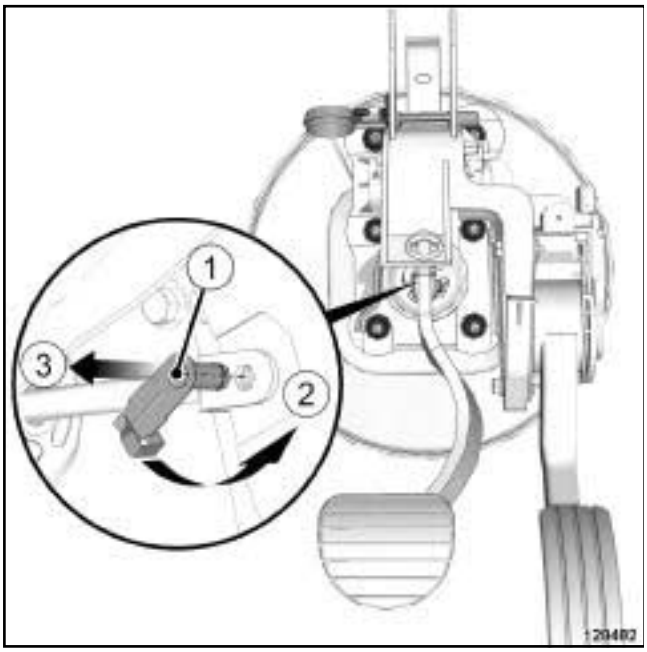

128482

❑ Remove the connecting shaft (**1**) between the brake pedal and the brake servo pushrod:

- unlock the shaft in accordance with (**2**) ,
- extract the shaft in accordance with (**3**) .

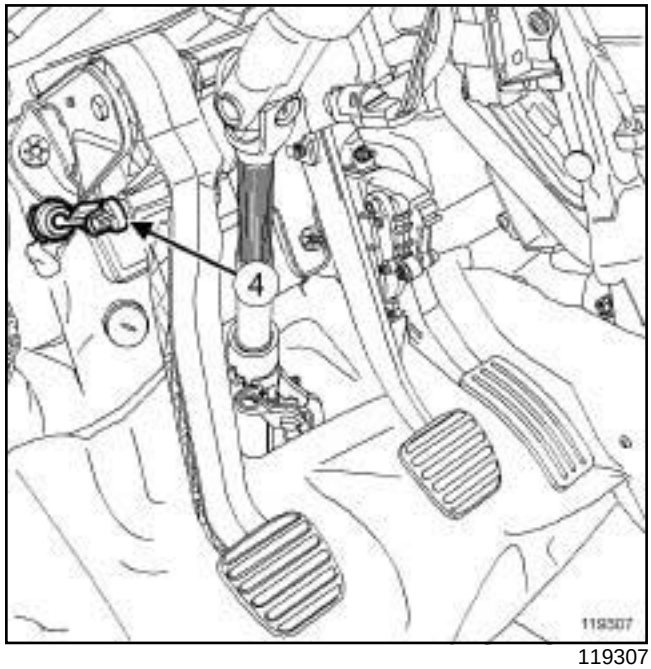

119307

❑ Uncouple the master cylinder ball joint (**4**) from the clutch pedal.

❑ Remove the two retaining clips from the pedal insulation and the insulating foam.

❑ Remove the pedal insulation (if fitted to the vehicle).

❑ Gently move aside the insulating foam.

❑ Disconnect the steering column and the steering box (see **36A**, **Steering assembly**, **Steering column: Removal - Refitting**, page **36A-7**) .

LEFT-HAND DRIVE

II - OPERATION FOR REMOVAL OF PART CONCERNED

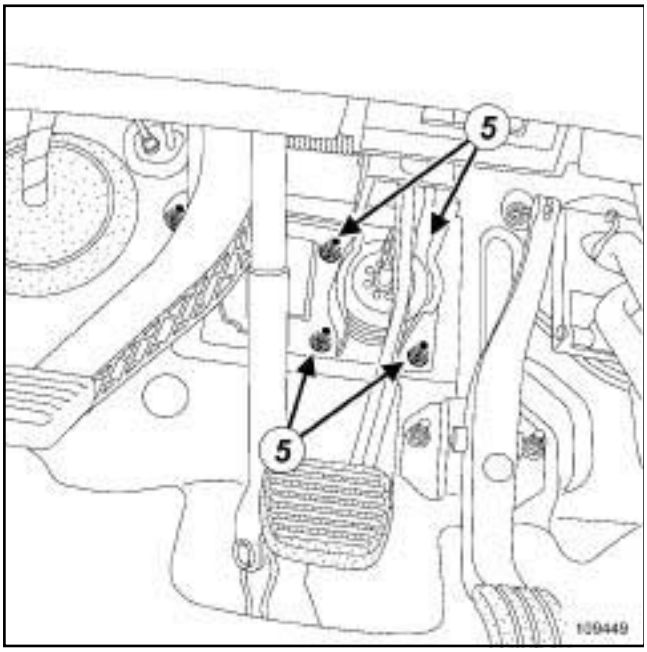

109449

- ❑ Remove the pedal yoke nuts (**5**) .
- ❑ Cut the insulating foam to extract the pedal yoke, if necessary.
- ❑ Remove the pedal yoke.
- ❑ In the event of replacement, remove the brake pedal (see **37A**, **Mechanical component controls**, **Brake pedal: Removal - Refitting**, page **37A-26**) .

REFITTING

I - REFITTING PREPARATION OPERATION

- ❑ Always replace the **parts always to be replaced: Connecting shaft between the brake pedal and the brake servo pushrod**.
- ❑ Coat the shaft with **MOLYCOTE 33M** grease (see **Vehicle: Parts and consumables for the repair**) (MR 388, 04B, Consumables - Products).

II - REFITTING OPERATION FOR PART CONCERNED

- ❑ In the event of replacement, refit the brake pedal (see **37A**, **Mechanical component controls**, **Brake pedal: Removal - Refitting**, page **37A-26**) .
- ❑ Refit the pedal yoke.
- ❑ Torque tighten the **pedal yoke nuts (21 N.m)**.
- ❑ Couple the steering column and the steering box (see **36A**, **Steering assembly**, **Steering column: Removal - Refitting**, page **36A-7**) .

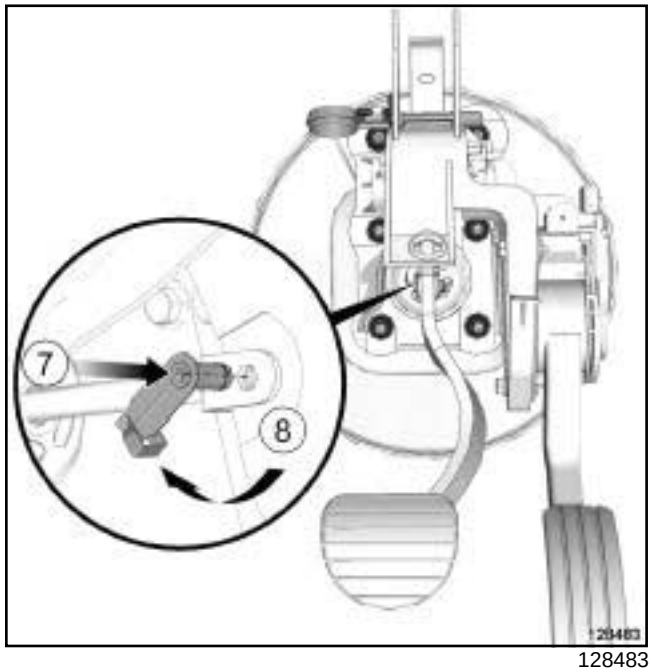

128483

- ❑ Refit a new connecting shaft between the brake pedal and the brake servo pushrod (pre-lubricated):
  - insert the shaft in accordance with (**7**) ,
  - lock the shaft in accordance with (**8**) .

III - FINAL OPERATION

- ❑ Refit:
  - the pedal insulation (if fitted to the vehicle),
  - the brake pedal switch (see **37A**, **Mechanical component controls**, **Brake pedal switch: Removal - Refitting**, page **37A-27**) .
- ❑ Check that the whole clutch system operates correctly.

RIGHT-HAND DRIVE

Tightening torques ▽	
pedal yoke nuts	**21 N.m**

REMOVAL

I - REMOVAL PREPARATION OPERATION

❑ Remove the brake pedal switch (see **37A**, **Mechanical component controls**, **Brake pedal switch: Removal - Refitting**, page **37A-27**) .

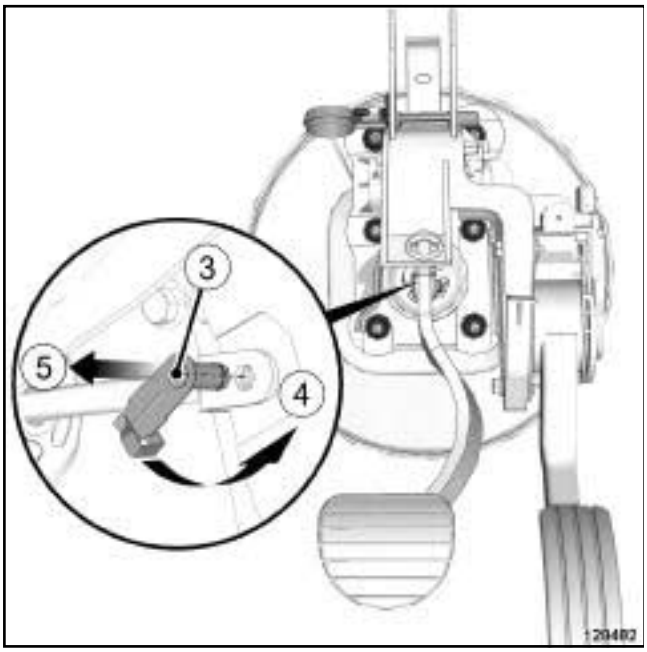

128482

❑ Remove the connecting shaft (**3**) between the brake pedal and the brake servo pushrod:

- unlock the shaft in accordance with (**4**) ,
- extract the shaft in accordance with (**5**) .

II - OPERATION FOR REMOVAL OF PART CONCERNED

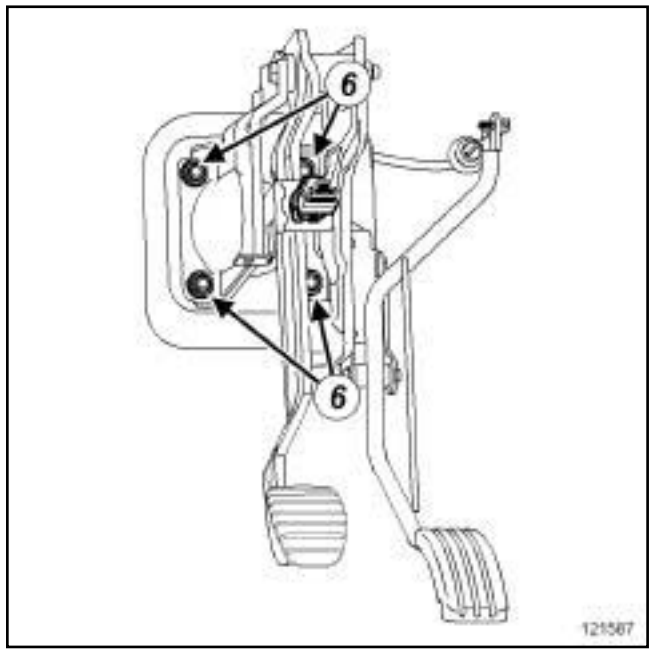

121587

❑ Remove:

- the nuts (**6**) of the pedal yoke,
- the pedal yoke.

❑ In the event of replacement, remove:

- the brake pedal (see **37A**, **Mechanical component controls**, **Brake pedal: Removal - Refitting**, page **37A-26**) ,
- the accelerator pedal (see **37A**, **Mechanical component controls**, **Accelerator pedal: Removal - Refitting**, page **37A-20**) .

REFITTING

I - REFITTING PREPARATION OPERATION

❑ Always replace the **parts always to be replaced: Connecting shaft between the brake pedal and the brake servo pushrod**.

❑ Coat the shaft with **MOLYCOTE 33M** grease (see **Vehicle: Parts and consumables for the repair**) (MR 388, 04B, Consumables - Products).

RIGHT-HAND DRIVE

II - REFITTING OPERATION FOR PART CONCERNED

❏ In the event of replacement, refit:

- the accelerator pedal (see **37A**, **Mechanical component controls**, **Accelerator pedal: Removal - Refitting**, page **37A-20**) ,
- the brake pedal (see **37A**, **Mechanical component controls**, **Brake pedal: Removal - Refitting**, page **37A-26**) .

❏ Refit the pedal yoke.

❏ Torque tighten the **pedal yoke nuts (21 N.m)**.

III - FINAL OPERATION

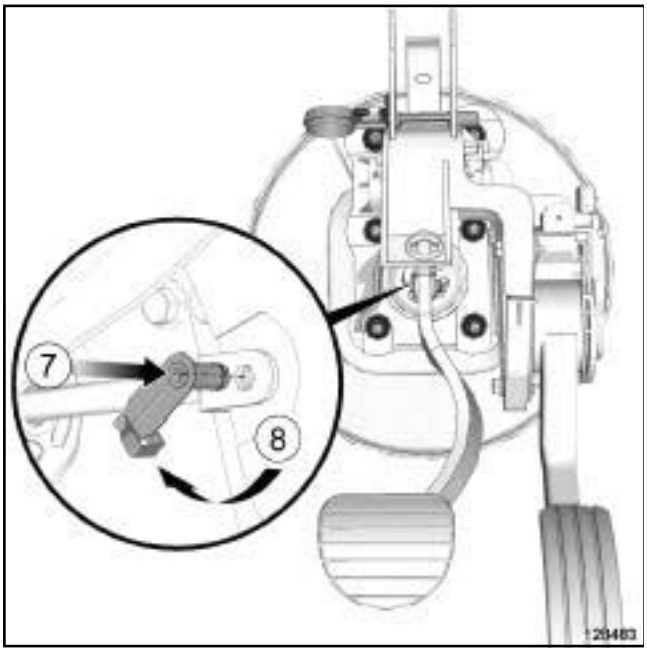

128483

❏ Refit a new connecting shaft between the brake pedal and the brake servo pushrod:

- insert the shaft in accordance with (**7**) ,
- lock the shaft in accordance with (**8**) .

.

❏ Refit the brake pedal switch (see **37A**, **Mechanical component controls**, **Brake pedal switch: Removal - Refitting**, page **37A-27**) .

Equipment required
Diagnostic tool

Tightening torques ▽	
accelerator pedal bolts	**8 N.m**

REMOVAL

I - REMOVAL PREPARATION OPERATION

❑ Switch off the ignition.

II - OPERATION FOR REMOVAL OF PART CONCERNED

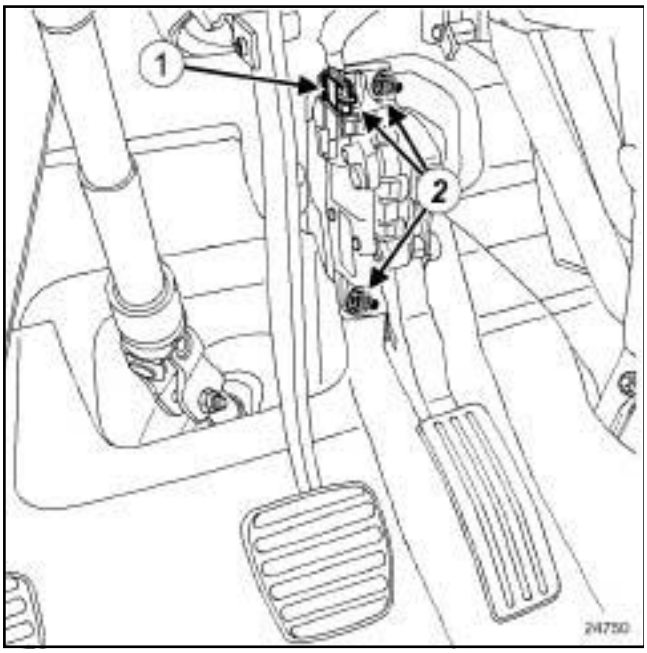

24750

❑ Disconnect the accelerator pedal potentiometer connector (**1**) .

❑ Remove:

- the accelerator pedal bolts (**2**) on the pedal mounting,
- the accelerator pedal.

REFITTING

I - REFITTING OPERATION FOR PART CONCERNED

❑ Refit:

- the accelerator pedal,
- the accelerator pedal bolts on the pedal mounting.

❑ Torque tighten the **accelerator pedal bolts (8 N.m)**.

❑ Connect the accelerator pedal potentiometer connector.

II - FINAL OPERATION

❑ Using the **Diagnostic tool**, check that the accelerator assembly operates correctly.

K4M, and 4X2 TRANSMISSION

Tightening torques ▽	
pedal mounting nuts	**21 N.m**

REMOVAL

OPERATION FOR REMOVAL OF PART CONCERNED

LEFT-HAND DRIVE

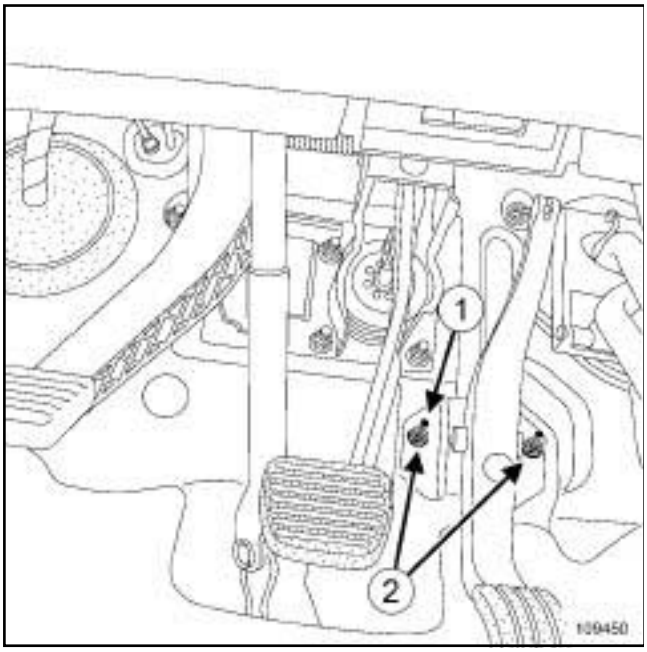

109450

❑ Undo the special nut (**1**) for the insulating foam on the left-hand nut of the accelerator pedal mounting.

❑ Remove:

- the nuts (**2**) of the accelerator pedal mounting,
- the mounting - accelerator pedal assembly.

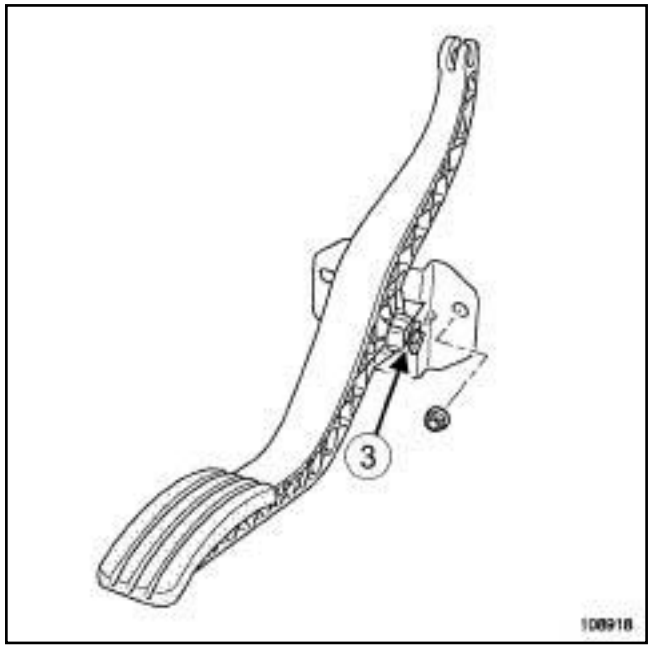

108918

❑ Remove:

- the accelerator cable on the pedal side by holding it upwards and sliding the end piece of the cable towards the centre console,
- the circlip (**3**) using a screwdriver,

> Note:
>
> Note the fitting direction of the shaft in relation to the pedal mounting.

❑ Remove:

- the pedal shaft,
- the accelerator pedal.

K4M, and 4X2 TRANSMISSION

RIGHT-HAND DRIVE

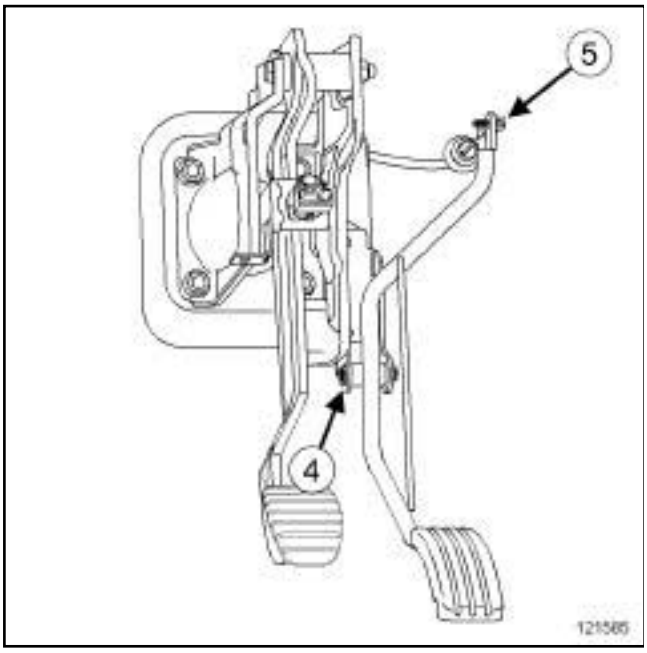

121585

❑ Extract the clip (**5**) from the accelerator cable on the pedal.

❑

> Note:
>
> Note the fitting direction of the shaft in relation to the pedal mounting.

Remove:

- the circlip (**4**) using a screwdriver,
- the accelerator pedal shaft,
- the accelerator pedal.

REFITTING

REFITTING PREPARATION OPERATION

❑ Coat the shaft with **MOLYCOTE 33M** grease (see **Vehicle: Parts and consumables for the repair**) (MR 388, 04B, Consumables - Products).

> Note:
>
> Refit the shaft in relation to the pedal mounting in the position noted during the removal operation.

> Note:
>
> Do not hit the pedal assembly shaft with a hammer to get it back into place.

I - REFITTING OPERATION FOR PART CONCERNED

LEFT-HAND DRIVE

❑ Refit on the accelerator pedal mounting:

- the pedal,
- the pedal shaft,
- the circlip.

❑ Refit the accelerator cable end piece on the hole on top of the accelerator pedal by sliding it from right to left and by guiding the cable into the groove of the pedal.

❑ Position the mounting - accelerator pedal assembly on the centre console.

❑ Refit the accelerator pedal mounting nuts.

❑ Torque tighten the **pedal mounting nuts (21 N.m)**.

❑ Refit:

- the insulating foam,
- the special nut for the insulating foam on the left-hand nut of the accelerator pedal.

RIGHT-HAND DRIVE

❑ Refit the accelerator pedal on its mounting.

❑ Refit:

- the accelerator pedal shaft,
- the circlip on the accelerator pedal shaft,

- the accelerator cable clip on the pedal.

II - FINAL OPERATION

❑ Check that the whole accelerator system operates correctly.

K4M, and 4X2 TRANSMISSION

REMOVAL

I - REMOVAL PREPARATION OPERATION

RIGHT-HAND DRIVE

❑ Remove the brake fluid reservoir (see **37A**, **Mechanical component controls**, **Master cylinder: Removal - Refitting**, page **37A-2**) .

II - OPERATION FOR REMOVAL OF PART CONCERNED

LEFT-HAND DRIVE

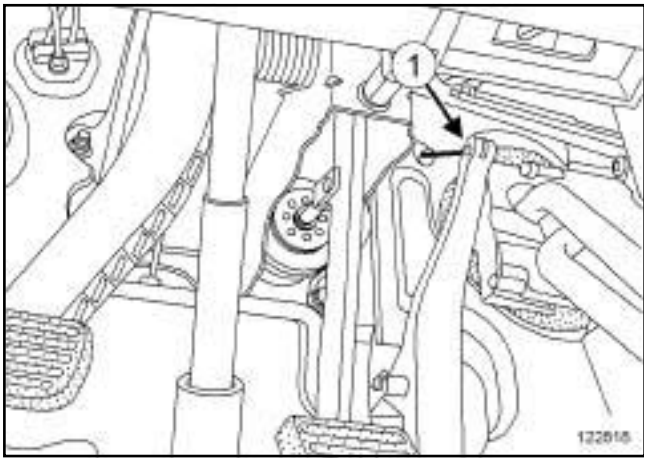

122818

❑ Disconnect the accelerator pedal cable at (**1**) .

RIGHT-HAND DRIVE

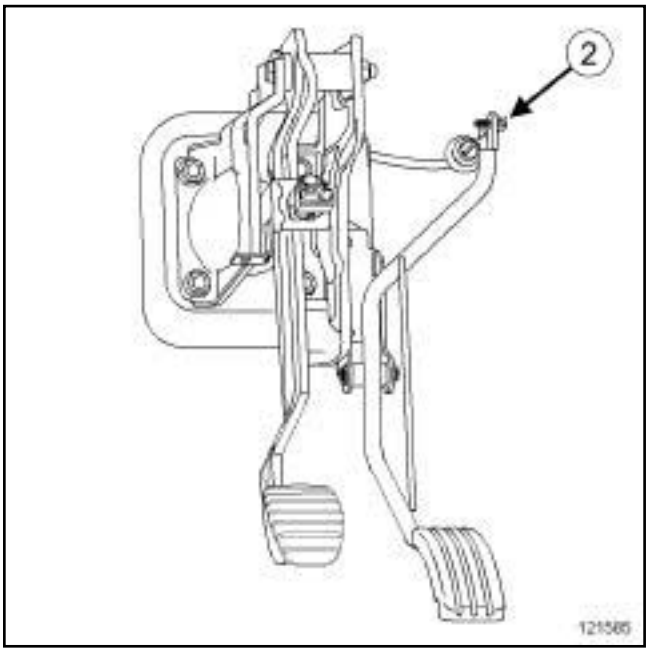

121585

❑ Extract the clip (**2**) from the accelerator cable on the pedal.

❑ Push the accelerator cable sheath stop into the engine compartment.

K4M, and 4X2 TRANSMISSION

RIGHT-HAND DRIVE

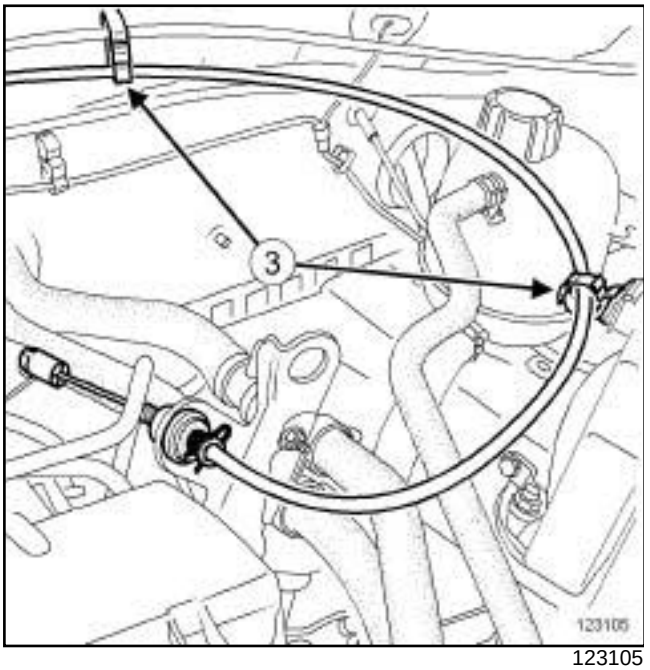

123105

❑ Unclip the accelerator cable at (**3**) .

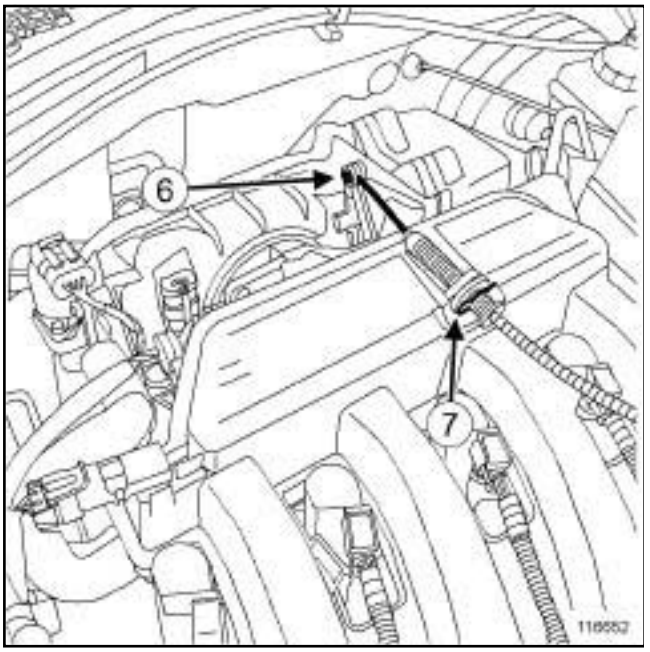

116652

❑ Disconnect the throttle valve accelerator cable at (**6**) .

❑ Remove the adjusting clip (**7**) from the accelerator cable.

❑ Remove the accelerator cable from the inlet distributor.

❑ Remove the accelerator pedal cable via the engine compartment.

REFITTING

I - REFITTING OPERATION FOR PART CONCERNED

❑ Pass the accelerator pedal cable into the passenger compartment via the engine compartment.

❑ Clip the accelerator pedal cable sheath stop onto the bulkhead.

LEFT-HAND DRIVE

❑ Position the accelerator pedal cable in the pedal notch.

RIGHT-HAND DRIVE

❑ Refit the accelerator pedal cable clip to the pedal.

❑ Refit the accelerator pedal cable to the inlet distributor.

RIGHT-HAND DRIVE

❑ Clip on the accelerator pedal cable at ***(3)*** .

❑ Refit:

- the accelerator pedal cable on the throttle valve,
- the accelerator cable adjusting clip.

II - FINAL OPERATION

❑ Adjust the accelerator pedal cable by fully depressing the accelerator pedal.

RIGHT-HAND DRIVE

❑ Refit the brake fluid reservoir (see **37A**, **Mechanical component controls**, **Master cylinder: Removal - Refitting**, page **37A-2**) .

❑ Bleed the brake circuit (see **30A**, **General information**, **Braking circuit: Bleed**, page **30A-4**) .

Tightening torques ▽	
brake pedal shaft nut	**16 N.m**

REMOVAL

I - REMOVAL PREPARATION OPERATION

❑ Remove the brake pedal brake light switch (see **37A**, **Mechanical component controls**, **Brake pedal switch: Removal - Refitting**, page **37A-27**) .

II - OPERATION FOR REMOVAL OF PART CONCERNED

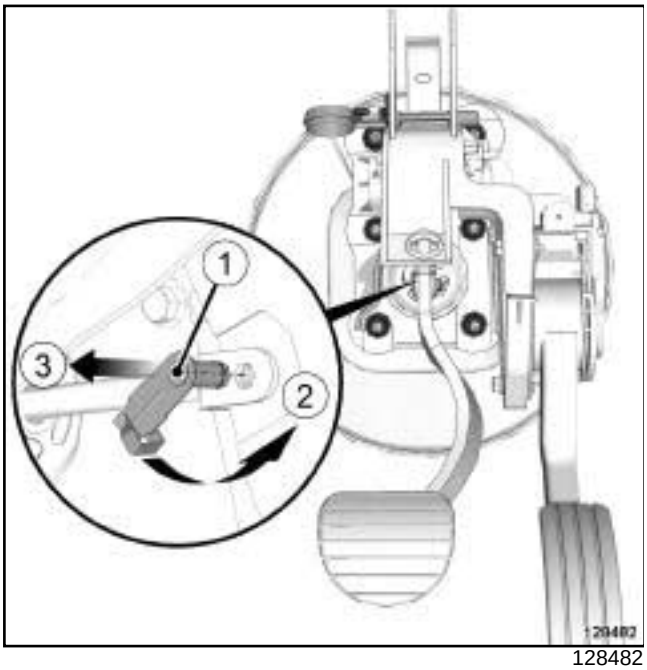

128482

❑ Remove the connecting shaft (**1**) between the brake pedal and the brake servo pushrod:

- unlock the shaft in accordance with (**2**) ,
- extract the shaft in accordance with (**3**) .

❑ Remove the brake pedal.

REFITTING

I - REFITTING PREPARATION OPERATION

❑ Always replace the **parts always to be replaced: Connecting shaft between the brake pedal and the brake servo pushrod**.

❑ Check the condition of the parts.

❑ Replace any faulty parts.

❑ Coat the shaft with **MOLYKOTE 33M** (see **Vehicle: Parts and consumables for the repair**) grease (MR 388, 04B, Consumables - Products).

II - REFITTING OPERATION FOR PART CONCERNED

❑ Refit:

- the brake pedal,
- the brake pedal shaft.

❑ Torque tighten the **brake pedal shaft nut (16 N.m)**.

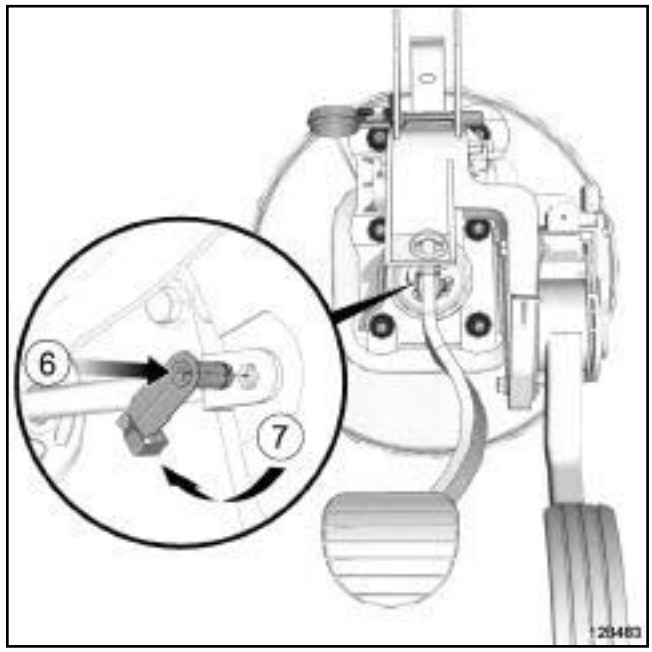

128483

❑ Refit a new connecting shaft between the brake pedal and the brake servo pushrod:

- insert the shaft in accordance with (**6**) ,
- lock the shaft in accordance with (**7**) .

III - FINAL OPERATION

❑ Refit the brake light switch (see **37A**, **Mechanical component controls**, **Brake pedal switch: Removal - Refitting**, page **37A-27**) .

REMOVAL

I - REMOVAL PREPARATION OPERATION

❏ Remove the dashboard lower trim (depending on the equipment level).

II - OPERATION FOR REMOVAL OF PART CONCERNED

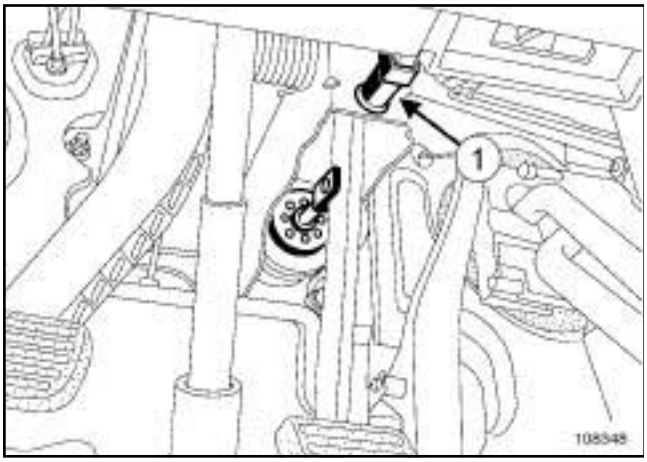

108348

❏ Disconnect the brake light switch connector.

❏ Turn the brake light switch (**1**) a quarter of a turn anti-clockwise.

❏ Remove the brake light switch.

REFITTING

I - REFITTING PREPARATION OPERATION

When removing and refitting or when replacing the brake light switch

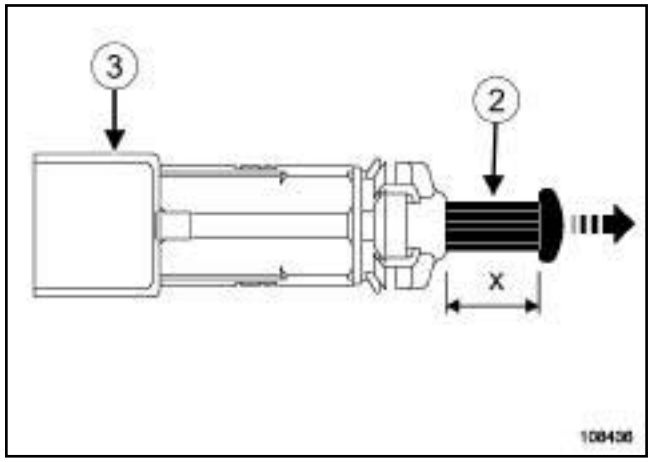

108436

❏

> **WARNING**
>
> Handle the switch (**3**) with care.
>
> Only operate the piston (**2**) to adjust the dimension (**x**) .
>
> The switch must be replaced:
>
> - if the piston (**2**) is separated from the switch (**3**) ,
> - if more than three adjustments to dimension (**x**) are necessary during the operation.

❏ Measure the dimension (**x**) of the piston (**2**) . If dimension (**x**) is less than **13 mm**, carefully pull the end of the piston to adjust dimension (**x**) to between **13 mm** minimum and **14 mm** maximum.

II - REFITTING OPERATION FOR PART CONCERNED

❏ Depress the brake pedal by hand.

❏ Position the brake light switch on the pedal assembly.

❏ Lock the brake light switch by turning it a quarter of a turn clockwise.

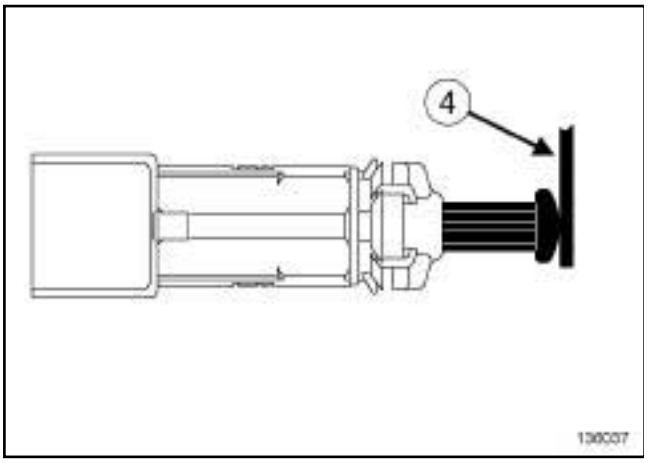

136037

❑

> Note:
>
> To adjust the position of the piston of the brake light switch, place a **2 mm** thick shim (**4**) between the piston crown of the brake light switch and the brake pedal.

❑ Carefully support the return of the brake pedal (shim in place).

> Note:
>
> The brake light switch has an automatic adjustment feature which adapts to the position of the pedal.
>
> The automatic adjustment makes a clicking noise when in operation.

❑ Connect the brake light switch connector.

III - FINAL OPERATION

❑ Check that the brake light switch is operating correctly:

- depress the brake pedal to switch on the lights,
- release the brake pedal to switch off the lights.

❑ Refit the dashboard lower trim (depending on the equipment level).

Tightening torques ▽	
parking brake lever nuts	**8 N.m**

REMOVAL

I - REMOVAL PREPARATION OPERATION

❑ Remove the centre console (see **Centre console: Removal - Refitting**) (57A, Interior equipment).

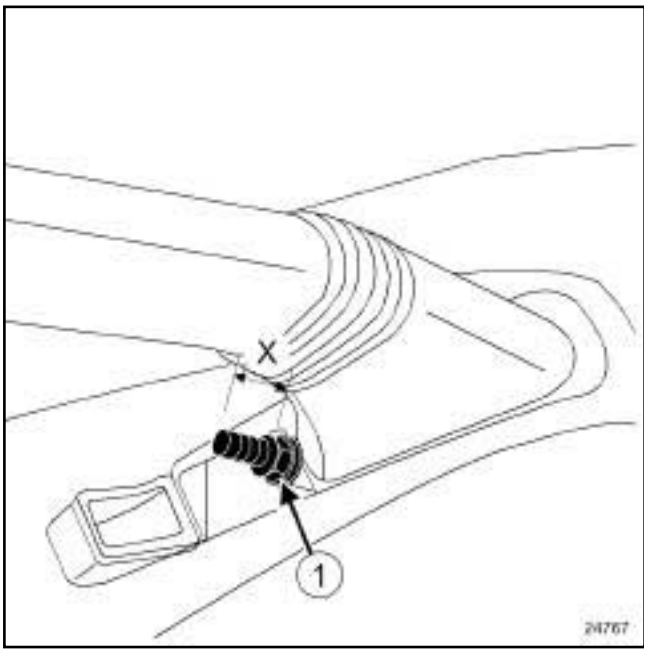

24767

❑ Undo the handbrake adjusting nut (**1**) , marking the dimension (**X**) = **16 mm ± 0.30**, to detach the cables at the compensator.

II - REMOVAL OPERATION

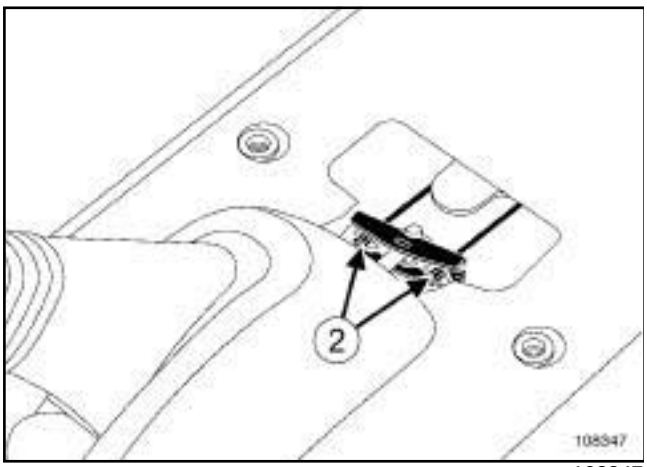

108347

❑ Unclip the two cables (**2**) .

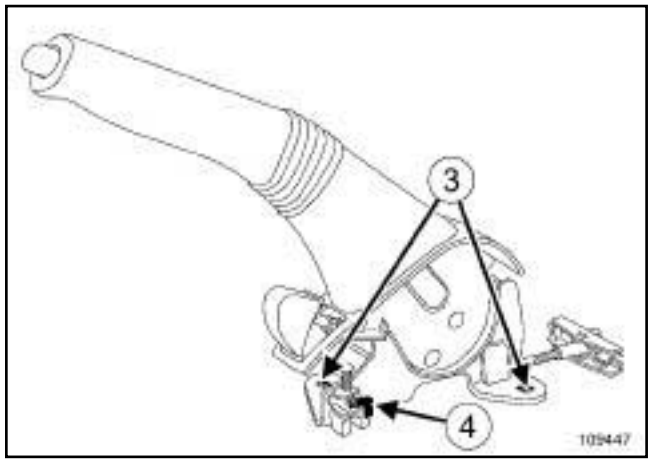

109447

❑ Remove nuts (**3**) .

❑ Lift the parking brake lever slightly to be able to disconnect the parking brake switch connector (**4**) .

❑ Remove the parking brake lever.

REFITTING

I - REFITTING OPERATION

❑ Refit:

- the parking brake lever,
- the two cables at the compensator,
- the parking brake lever nuts.

❑ Connect the connector on the parking brake switch.

❑ Tighten the parking brake adjusting nut, observing the dimension **X = 16 mm ± 0.30**.

❑ Torque tighten the **parking brake lever nuts (8 N.m)**.

II - FINAL OPERATION

❑ Connect the connector on the parking brake switch.

❑ Adjust the parking brake if the lever stops between the first and second positions of the parking brake lever's travel (see **37A**, **Mechanical component controls**, **Parking brake lever: Adjustment**, page **37A-30**) .

❑ Refit the centre console (see **Centre console: Removal - Refitting**) (57A, Interior equipment).

A poorly adjusted parking brake:

- prevents correct operation of the automatic compensation system for the brake shoes,
- causes premature wear of brake shoes.

ADJUSTMENT

I - ADJUSTMENT PREPARATION OPERATION

❏ Position the vehicle on a two-post lift (see **Vehicle: Towing and lifting**) .

❏ Apply the parking brake five times to condition the cables for normal use.

❏ Put the parking brake lever into the released position.

❏ Check that the rear wheels turn freely. If they do not, check the following components and if necessary repair:

- the parking brake cables,
- the calliper piston,
- the automatic compensation system,
- calliper

❏ Remove the rear wheels (see **35A**, **Wheels and tyres**, **Wheel: Removal - Refitting**, page **35A-1**) .

II - OPERATION FOR ADJUSTMENT OF PART CONCERNED

1. Cable clutch control

No.	Description
(1)	Clutch cable
(2)	Clutch pedal
(3)	Clutch fork
(4)	Clutch thrust bearing

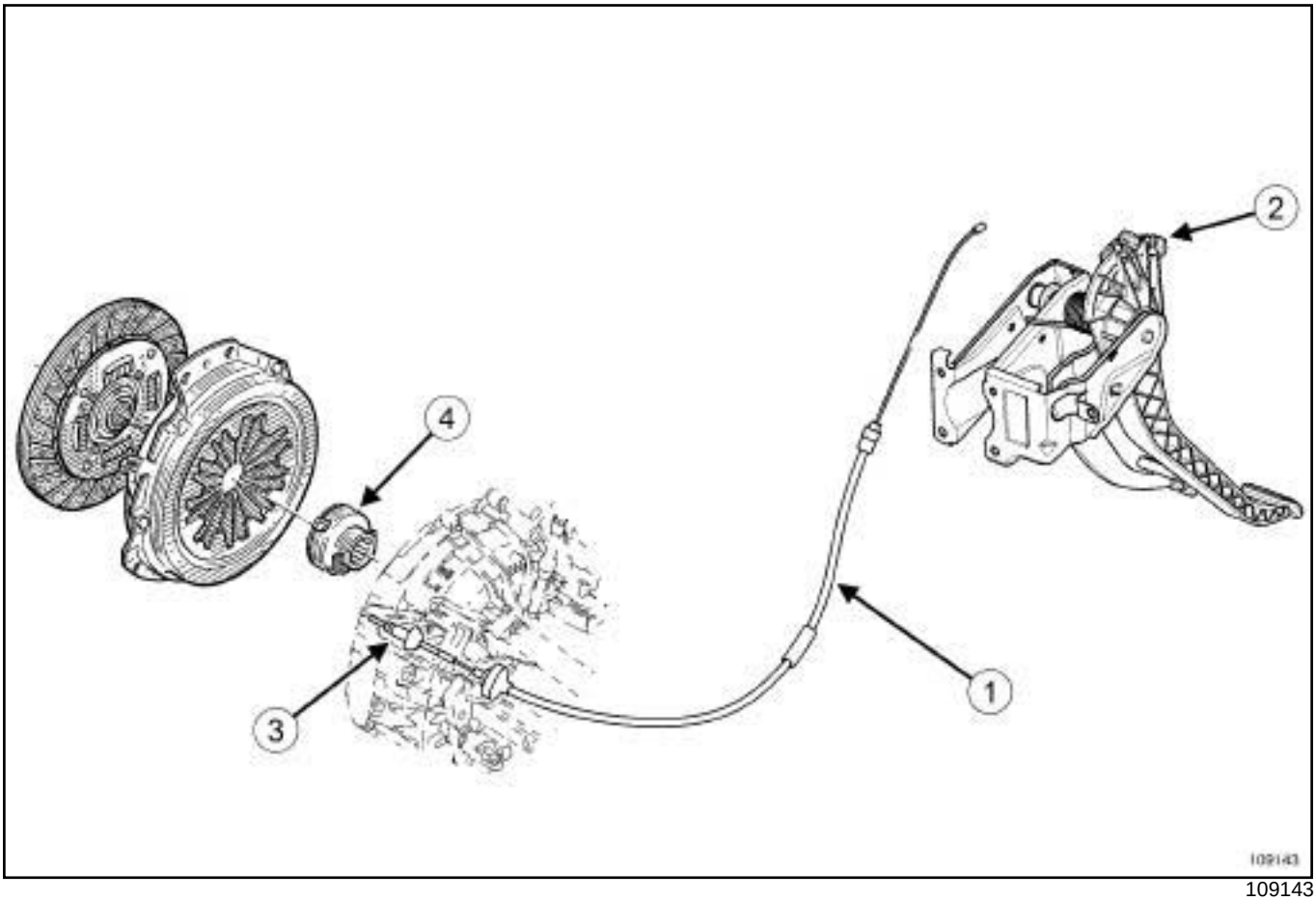

109143

This control has no automatic compensation.

2. Hydraulic clutch control

No.	Description
(5)	Slave cylinder supply pipe (engine compartment)
(6)	Master cylinder (engine compartment/passenger compartment connection)
(7)	Clutch pedal
(8)	Slave cylinder (on gearbox)
(9)	Master cylinder supply pipe (engine compartment)
(10)	Brake fluid reservoir

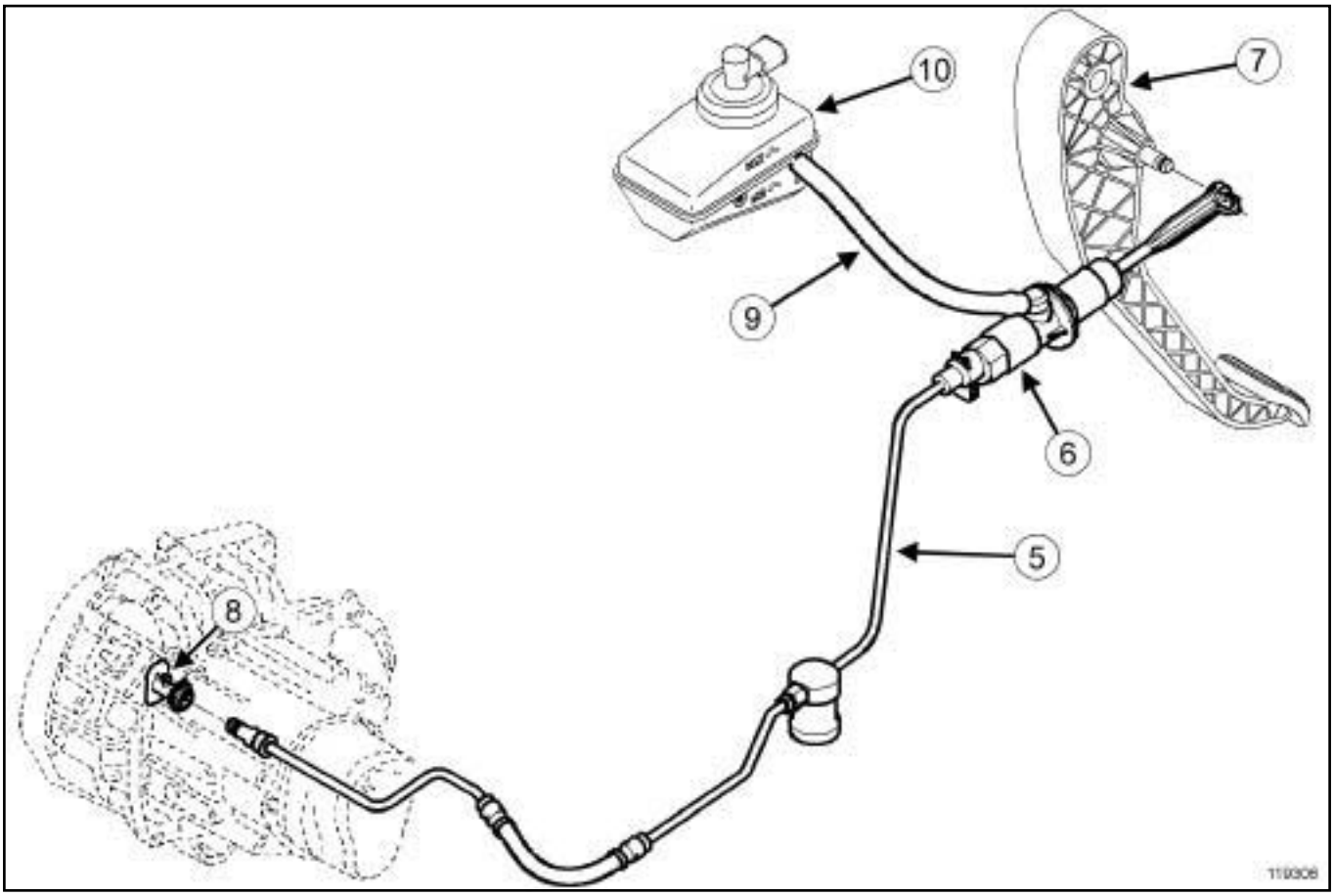

119306

LEFT-HAND DRIVE

Tightening torques ▽	
pedal shaft nut	**21 Nm**

REMOVAL

I - OPERATION FOR REMOVAL OF PART CONCERNED

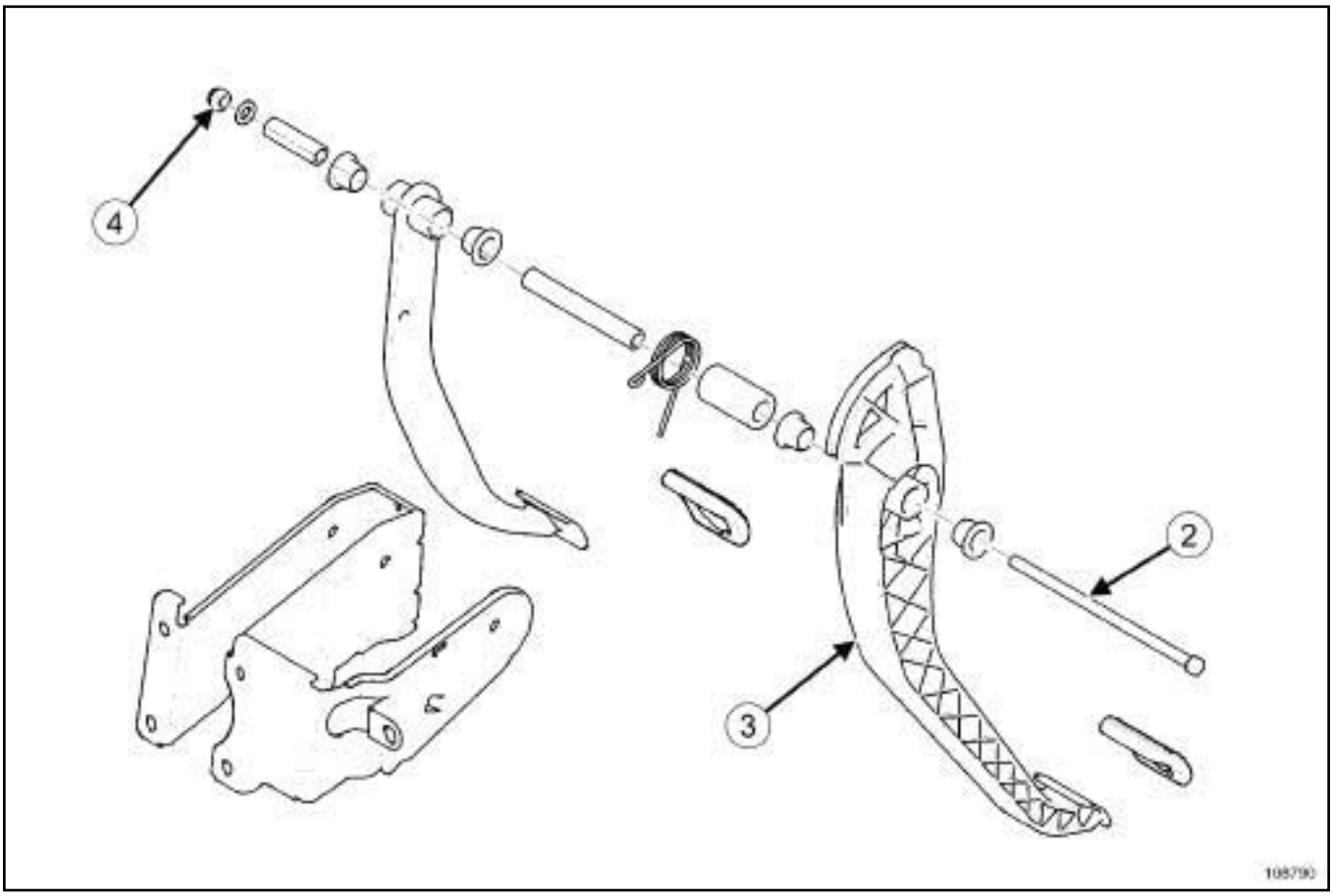

108790

- ❑ Remove the nut (**4**) from the pedal shaft (**2**) .
- ❑ Pull the shaft (**2**) to free the clutch pedal.
- ❑ Remove the clutch pedal (**3**) .

REFITTING

I - REFITTING PREPARATION OPERATION

- ❑ Coat the shaft with **MOLYCOTE 33M** grease (see **Vehicle: Parts and consumables for the repair**) (MR 388, 04B, Consumables - Products).

> Note:
>
> Do not hit the shaft with a hammer to get it to go back into place.

II - REFITTING OPERATION FOR PART CONCERNED

- ❑ Fit the pedal shaft.
- ❑ Refit the pedal shaft nut.
- ❑ Torque tighten the **pedal shaft nut (21 Nm)**.
- ❑ Check that the whole clutch system operates correctly.

RIGHT-HAND DRIVE

Tightening torques ▽	
clutch shaft nut	**16 Nm**

REMOVAL

OPERATION FOR REMOVAL OF PART CONCERNED

❑ Remove the cable from its slot, lifting the pedal and placing the cable perpendicular to the pedal.

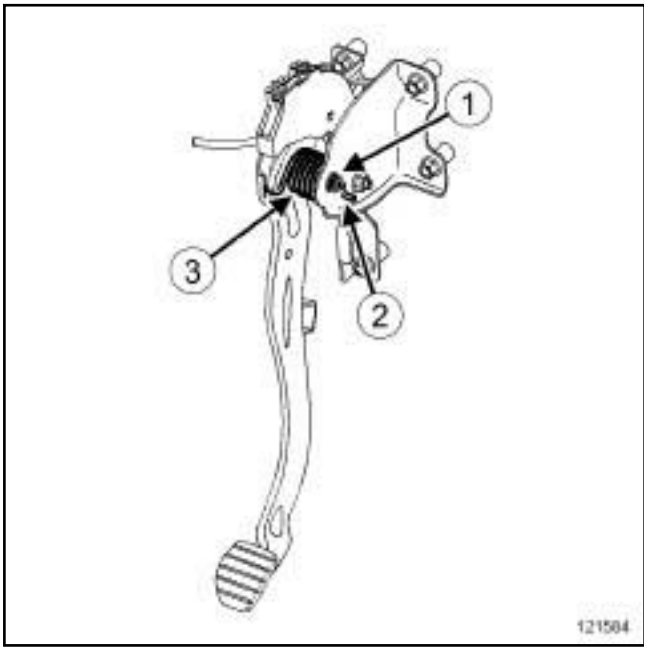

121584

❑ Remove the nut (**1**) from the pedal assembly shaft.

❑ Remove the shaft to release the clutch pedal.

❑ Extract the spring (**3**) from its housing (**2**) on the clutch pedal support.

❑ Remove the clutch pedal.

REFITTING

I - REFITTING PREPARATIONS OPERATION

❑ Check the condition of the components.

❑ Replace any faulty parts.

❑ Coat the shaft with **MOLYCOTE 33M** grease (see **Vehicle: Parts and consumables for the repair**) (MR 388, 04B, Consumables - Products).

II - REFITTING OPERATION FOR PART CONCERNED

❑ Place the clutch pedal in position with its spring.

> Note:
>
> Do not hit the shaft with a hammer to get it to go back into place.

❑ Refit:

- the clutch pedal shaft,
- the clutch pedal shaft nut.

❑ Torque tighten the **clutch shaft nut (16 Nm)**.

❑ Fit the cable in its notch, on the clutch pedal.

III - FINAL OPERATION.

❑ Check that the cable fits perfectly in the groove provided for it on the pedal.

❑ Check and adjust the clutch control cable clearance if necessary (see **Clutch control: Adjustment**) .

❑ Check that the whole clutch system operates correctly.

REMOVAL

I - REMOVAL PREPARATION OPERATION

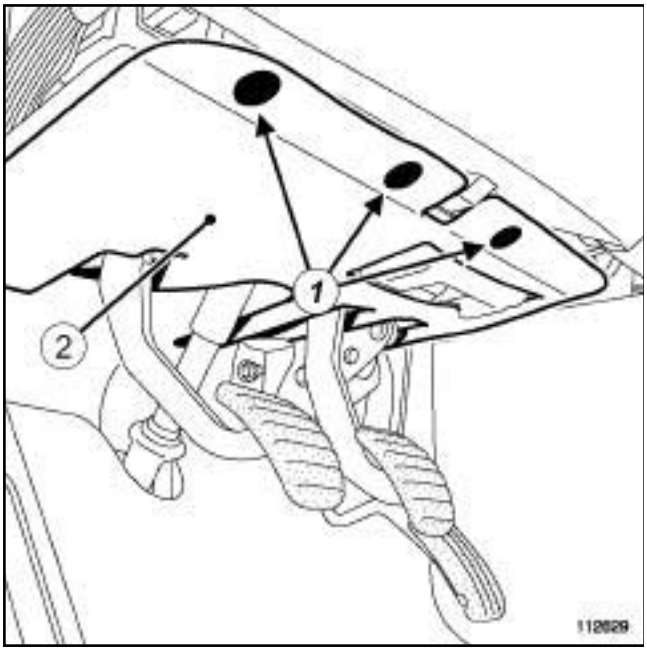

112629

❑ Remove:

- the driver side dashboard lower trim clips (**1**) ,
- the driver side dashboard lower trim (**2**) .

II - REMOVAL OPERATION

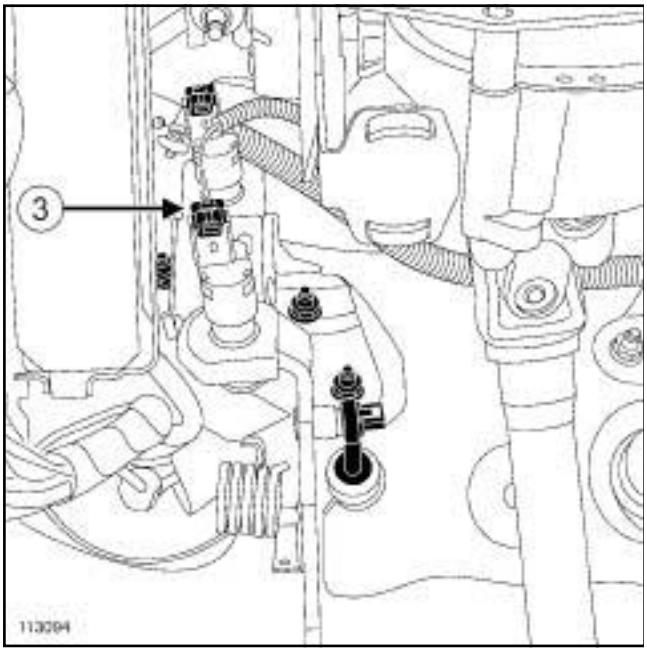

113094

❑ Disconnect the connector (**3**) from the clutch pedal switch.

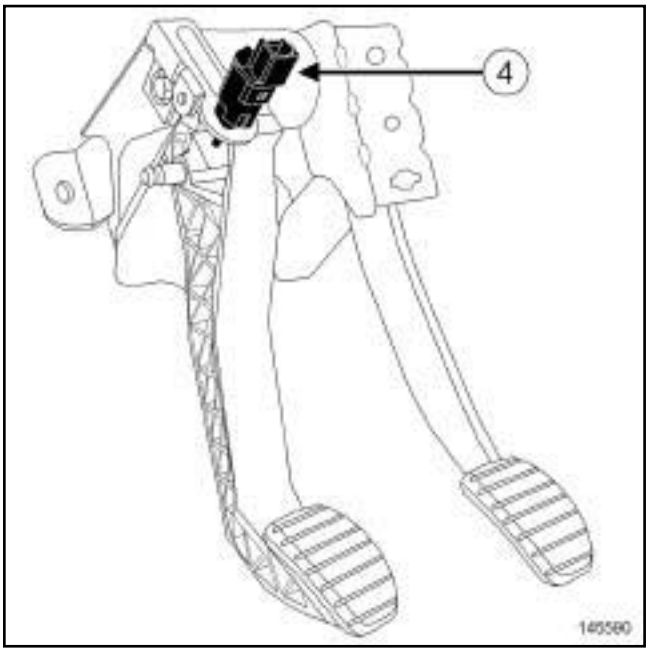

145590

❑ Turn the clutch pedal switch (**4**) one quarter of a turn anti-clockwise.

❑ Remove the clutch pedal switch (**4**) .

REFITTING

I - REFITTING PREPARATION OPERATION

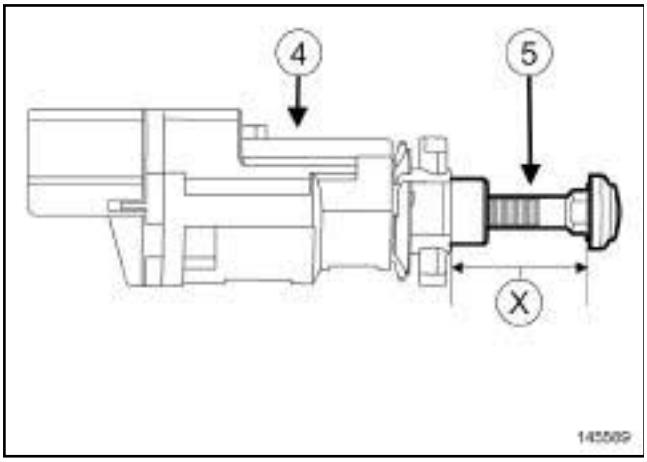

145589

❑

WARNING

To avoid damaging the clutch switch (**4**) :

- handle the switch with care,
- only activate the piston during the adjustment phase,
- do not perform more than 3 adjustments to dimension (X),
- do not separate the piston from the switch.

Replace the switch:

- if the piston is separated from the switch
- if more than 3 consecutive adjustments to dimension (X) have been performed.

❑ Measure dimension (**X**) of the piston (**5**) . If the dimension is less than **20 mm**, carefully pull on the end of the piston to adjust the dimension between **20 mm minimum** and **22 mm maximum**.

II - REFITTING OPERATION

❑ Depress the clutch pedal by hand.

❑ Position the clutch pedal switch on the pedal assembly.

❑ Lock the clutch pedal switch by turning it a quarter of a turn clockwise.

❑ At the same time, carefully return the clutch pedal.

Note:

The clutch pedal switch has an automatic adjustment feature, adapting to the pedal position.

The automatic adjustment makes a clicking noise when in operation.

❑ Connect clutch switch connector.

III - FINAL OPERATION

❑ Refit the driver side dashboard lower trim.

JR5

Equipment required
brake circuit bleeding device
hydraulic circuit bleed syringe

Bleed in the event of:

- dead travel,
- pedal at mid-travel,
- pedal to the floor,
- poor gear changing.

I - PRECAUTIONS DURING REPAIR

Risks relating to contamination.

❏ The hydraulic clutch system is very sensitive to contamination. The risks caused by contamination are:

- impossible to change gears,
- damage to or destruction of the clutch system,
- leaks on the hydraulic circuit.

All the operations on the hydraulic clutch circuit system must be carried out under excellent cleanliness conditions. This ensures that no impurities enter the hydraulic circuit during the operation.

The cleanliness principles apply to all components of the hydraulic clutch circuit.

Items causing contamination are:

- metal or plastic swarf,
- fibres:
  - cardboard,
  - brushes,
  - paper,
  - clothing,
  - cloth,
  - dust and particles in the air,
  - etc.

Cleaning cloths.

❏ Use lint-free cleaning cloths (see **Products recommended for the repair**) (04B, Consumables - Products).

Each cloth must only be used once.

There are two types of equipment used to bleed the clutch circuit:

❏ ARC50 via the brake fluid reservoir.

❏ Syringe via the bleed hole located on the clutch slave cylinder.

There are two procedures used to bleed the clutch circuit:

❏ If no parts of the hydraulic clutch circuit are removed:

- Carry out the bleed operation using the ARC50 via the brake fluid reservoir or using a new syringe via the bleed hole located on the clutch slave cylinder.

❏ If no parts of the hydraulic clutch circuit are removed:

- Only carry out the bleed operation using a new syringe by injecting the brake fluid via the bleed hole on the clutch slave cylinder.

Note:

- Even the tiniest air bubble in the circuit can cause faulty operation (pedal failing to return properly, crunching sound when changing gear, etc.).
- Incorrect bleeding can lead to incorrect detection of faults and unnecessary part replacements.

Consumables required for the repair:

❏ Bleed the clutch circuit using approved (see **Vehicle: Parts and consumables for the repair**) brake fluid (04B, consumables - products).

II - PREPARATION OPERATION

❏ Position the vehicle on a two-post lift (see **Vehicle: Towing and lifting**) (02A, Lifting equipment).

❏ Remove the engine undertray.

JR5

There are several versions of bleed screw:

Screw type bleed screw.

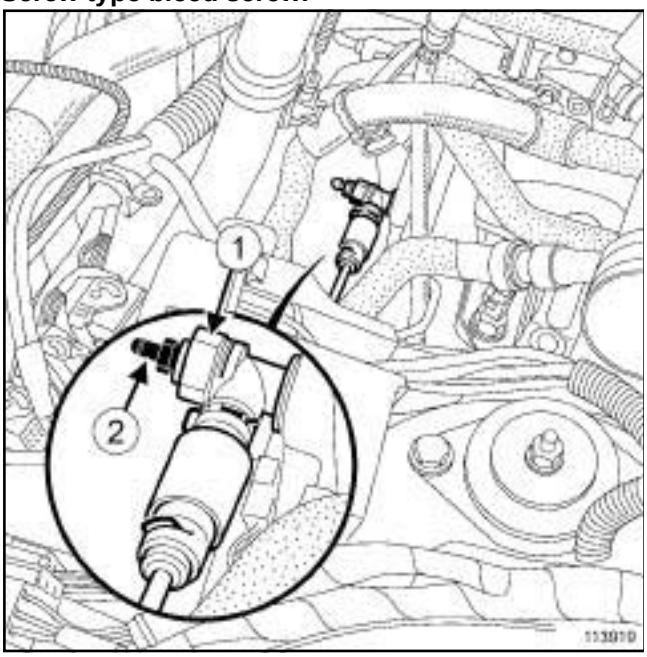

113919

❑ To open the bleed screw, hold the plastic union (**1**) using a ring spanner and undo the bleed screw (**2**) .

Half-turn bleed screw.

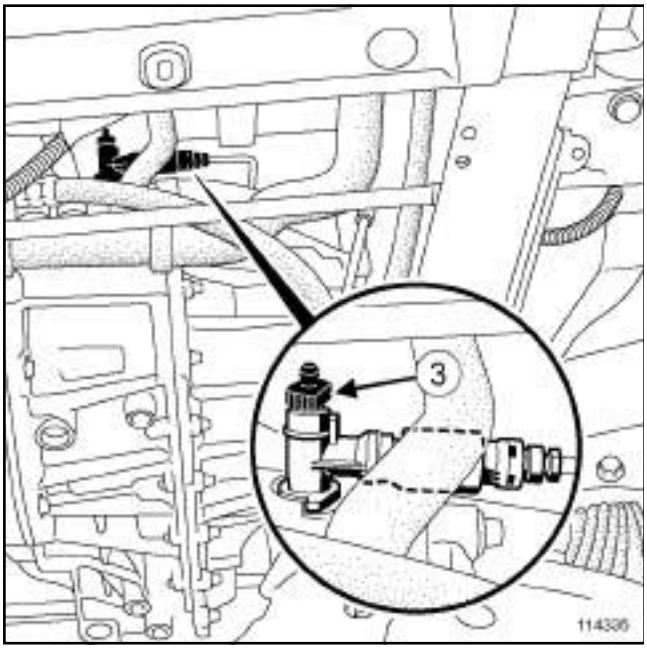

114335

❑ To open the bleed screw, fully turn the bleed screw (**3**) by hand.

Bleed screw with a clip.

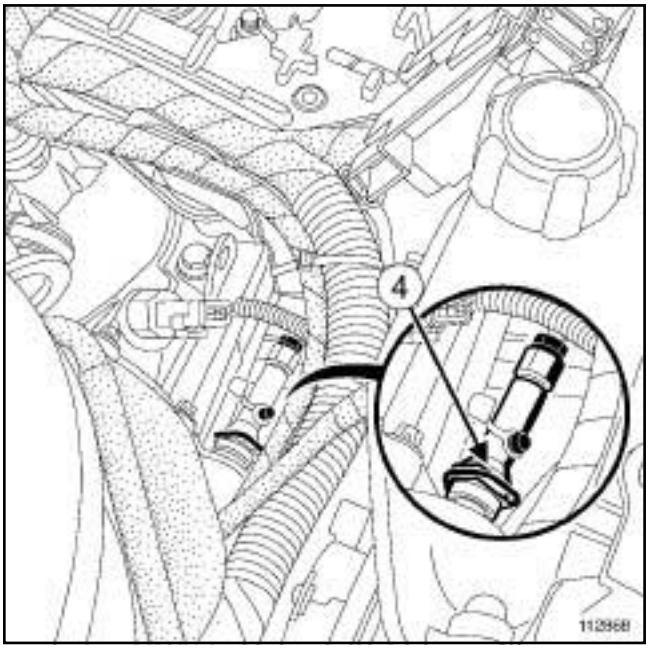

112868

❑ To open the bleed screw, press and hold the clip (**4**) while pulling by one notch.

Bleed screw with a clip.

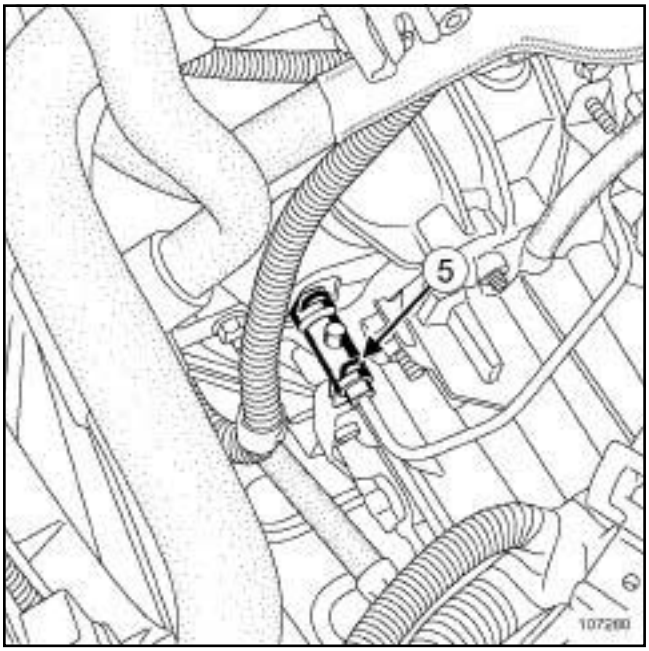

107280

❑ To open the bleed screw, lift the clip (**5**) while pulling by one notch.

JR5

Bleed screw with two clips.

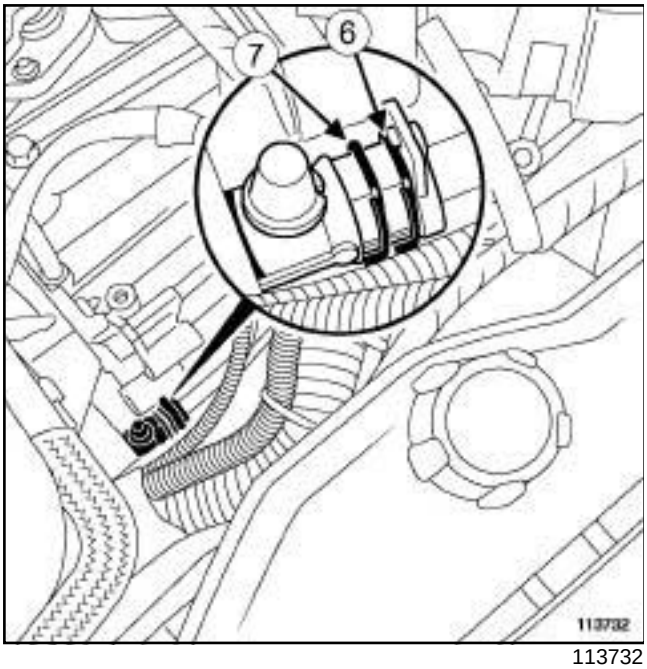

113732

❑ To open the bleed screw, lower the clip (**6**) and lift the clip (**7**) while pulling by one notch.

III - BLEED PROCEDURE IF NO PARTS OF THE HYDRAULIC CIRCUIT ARE REMOVED

1 - Bleed using the ARC50.

❑ Keep the clutch pedal in the upper position using a strap attached to the steering wheel to ensure continuity of the hydraulic circuit during the bleed operation.

> Note:
>
> Take care not to disrupt the adjustment of the clutch start of travel switch.

❑ Connect the **brake circuit bleeding device** (after having received Renault approval) to the master cylinder reservoir (see the instructions for the equipment).

❑ Remove the bleed plug from the clutch slave cylinder.

❑ Connect a transparent pipe to the bleed hole running to an empty container placed under the bleed hole.

❑ Open the bleed screw.

❑ Open the circuit between the bleeding device and the brake fluid reservoir.

❑ Let the brake fluid run until all air bubbles have been released.

❑ Stop the bleeding device to dump the pressure in the clutch circuit.

❑ Close the bleed screw.

❑ Remove the transparent pipe from the bleed hole.

❑ Refit the bleed plug.

❑ Top up the brake fluid level in the master cylinder reservoir after disconnecting the bleed device.

❑ Disengage and engage the clutch quickly around twenty times.

❑ Check that the clutch system is operating correctly.

❑ Repeat the bleed operation if necessary.

❑ Check the adjustment of the switch. (see **37A**, **Mechanical component controls**, **Clutch pedal switch: Removal - Refitting**, page **37A-35**) (37A, mechanical control elements).

JR5

2 - Bleed using a new syringe.

❑ Keep the clutch pedal in the upper position using a strap attached to the steering wheel to ensure continuity of the hydraulic circuit during the bleed operation.

> Note:
>
> Take care not to disrupt the adjustment of the clutch start of travel switch.

❑ Remove the bleed plug from the clutch slave cylinder.

❑ Connect a transparent pipe of sufficient length to the bleed hole (at least thirty centimetres) in order to place it at the same height as the reservoir.

❑ Open the bleed screw.

❑ Fill the brake fluid master cylinder reservoir until brake fluid flows out of the bleed screw.

> Note:
>
> The transparent pipe must remain at the same height as the master cylinder reservoir to prevent air from entering inside the clutch circuit.

❑ Connect a new **hydraulic circuit bleed syringe** filled with a useful volume of **60 ml** of approved brake fluid to the end of the transparent pipe.

❑ Slowly inject the entire contents of the syringe into the hydraulic clutch circuit without injecting any of the air from the top section of the syringe.

❑ Close the bleed screw.

❑ Remove the transparent pipe from the bleed hole.

❑ Refit the bleed plug.

❑ Top up the brake fluid level in the master cylinder reservoir.

❑ Disengage and engage the clutch quickly around twenty times.

❑ Check that the clutch system is operating correctly.

❑ Repeat the bleed operation if necessary.

❑ Check the adjustment of the switch. (see **37A**, **Mechanical component controls**, **Clutch pedal switch: Removal - Refitting**, page **37A-35**) (37A, mechanical control elements).

IV - BLEED PROCEDURE IF PARTS OF THE HYDRAULIC CIRCUIT ARE REMOVED.

❑

> **WARNING**
>
> The master cylinder pipe must be disconnected from its take-off point on the brake fluid reservoir, to avoid any foreign matter penetrating inside the hydraulic brake circuit.

> **WARNING**
>
> Prepare for the flow of fluid and protect the surrounding components.

> Note:
>
> Prefill the hydraulic circuit pipe equipped with a filter.
>
> Position the filter head facing downwards to ensure that it fills.

JR5

There are several versions of pipe with and without a filter:

Pipe without filter.

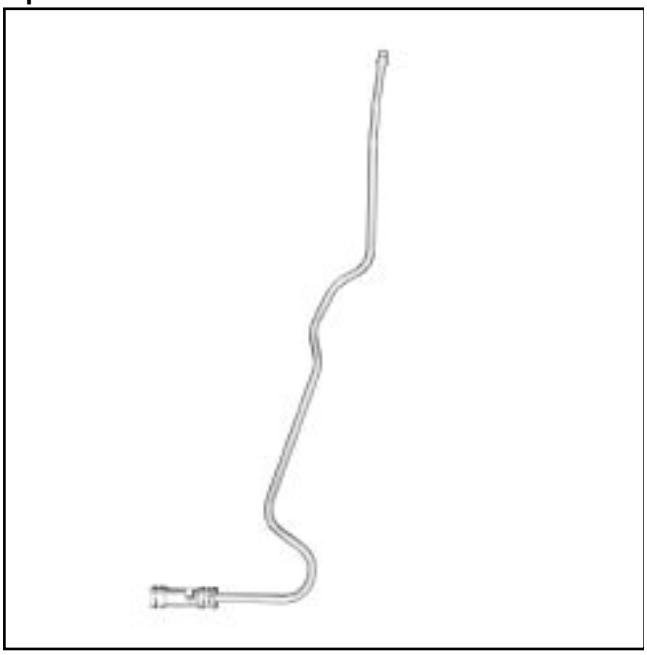

141812

Filling position for pipe with filter.

141811

Filling position for pipe with filter.

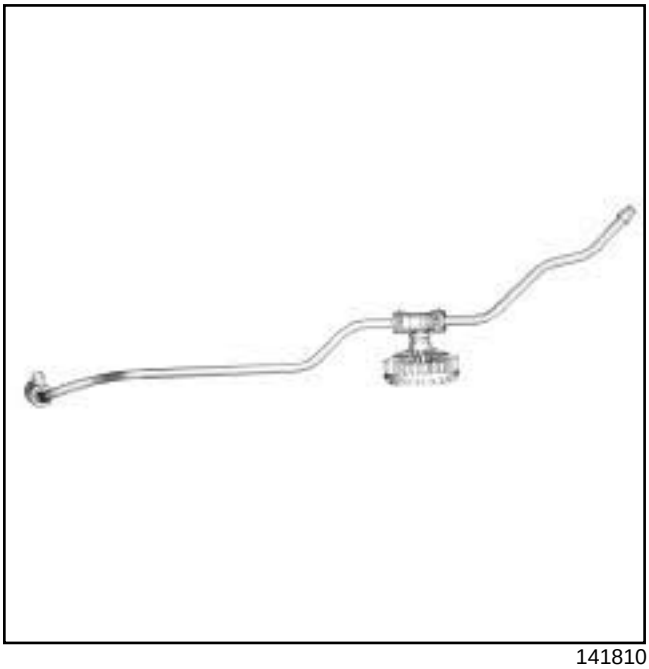

141810

Filling position for pipe with filter.

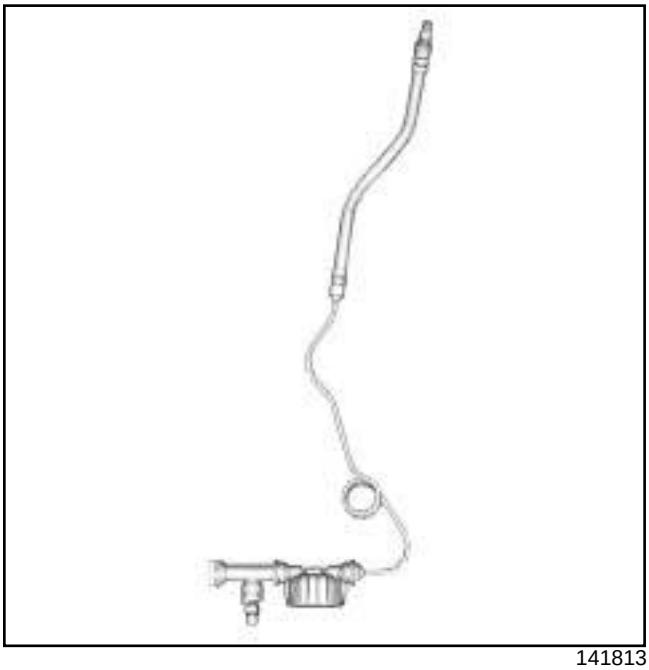

141813

- ❑ Prefill the clutch pipe using the syringe.
- ❑ Plug the prefilled pipe on the master cylinder end to stop any brake fluid from escaping.

JR5

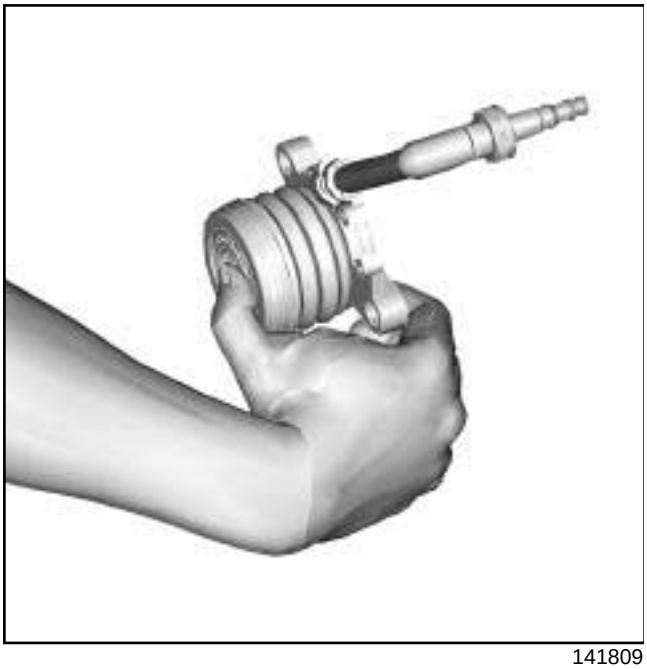

141809

- ❑ Prefill the hydraulic tappet using the new syringe (by gravity).
- ❑ Refit the part(s) concerned.

V - BLEED PROCEDURE AFTER A REMOVING A COMPONENT OF THE HYDRAULIC CIRCUIT.

- ❑ Keep the clutch pedal in the upper position using a strap attached to the steering wheel to ensure continuity of the hydraulic circuit during the bleed operation.

> Note:
>
> Take care not to disrupt the adjustment of the clutch start of travel switch.

- ❑ Remove the bleed plug from the clutch slave cylinder.
- ❑ Connect a transparent pipe of sufficient length to the bleed hole (at least thirty centimetres) in order to place it at the same height as the reservoir.
- ❑ Open the bleed screw.
- ❑ Fill the brake fluid master cylinder reservoir until brake fluid flows out of the bleed screw.

> Note:
>
> The transparent pipe must remain at the same height as the master cylinder reservoir to prevent air from entering inside the clutch circuit.

- ❑ Connect a new syringe containing **60 ml** of approved brake fluid to the end of the transparent pipe.
- ❑ Slowly inject the entire contents of the syringe into the hydraulic clutch circuit without injecting any of the air from the top section of the syringe.
- ❑ Close the bleed screw.
- ❑ Remove the transparent pipe from the bleed hole.
- ❑ Refit the bleed plug.
- ❑ Top up the brake fluid level in the master cylinder reservoir.
- ❑ Disengage and engage the clutch quickly around twenty times.
- ❑ Check that the clutch system is operating correctly.
- ❑ Repeat the bleed operation if necessary.
- ❑ Check the adjustment of the switch. (see **37A**, **Mechanical component controls**, **Clutch pedal switch: Removal - Refitting**, page **37A-35**) (37A, mechanical control elements).

JR5

VI - FINAL OPERATION

- ❑ Refit the engine undertray.
- ❑ Remove the vehicle from the two-post lift (see **Vehicle: Towing and lifting**) (02A, Lifting equipment).

JR5, and LEFT-HAND DRIVE

Tightening torques ▽	
expansion bottle nuts	**8 N.m**

REMOVAL

I - REMOVAL PREPARATION OPERATION

- ❑ Position the vehicle on a two-post lift (see **Vehicle: Towing and lifting**) (02A, Lifting equipment).
- ❑ Remove the engine undertray.
- ❑ Remove the two expansion bottle nuts.
- ❑ Move aside the expansion bottle.
- ❑ Disconnect the brake fluid level sensor connector from the reservoir.
- ❑ Remove the brake fluid filler cap.
- ❑ Drain the brake fluid reservoir using a syringe until the fluid level is below the clutch master cylinder supply orifice on the brake fluid reservoir.
- ❑ Place a cloth under this orifice.
- ❑ Disconnect the clutch master cylinder supply pipe from the brake fluid reservoir.
- ❑ Fit plugs into the openings.

II - OPERATION FOR REMOVAL OF PART CONCERNED

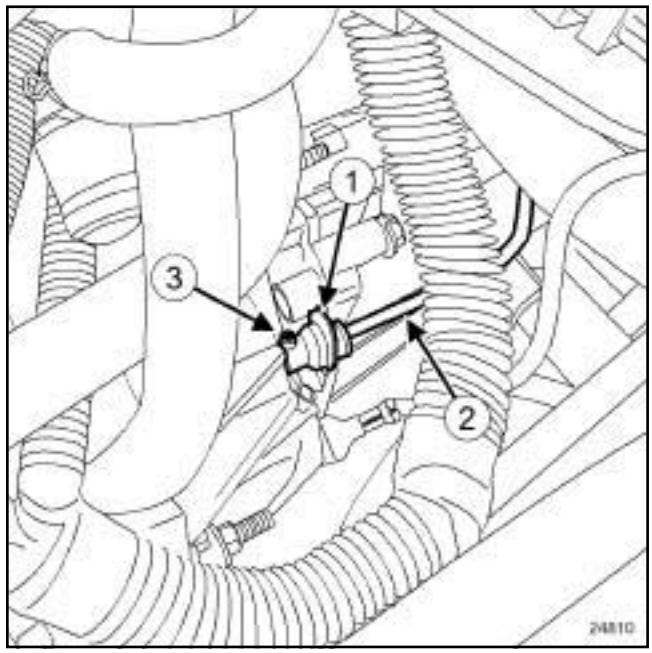

24810

- ❑ Place a cloth under the clutch slave cylinder.
- ❑ Remove the plug from the bleed hole (**3**) .
- ❑ Press the clip (**1**) .

> **WARNING**
> Do not pull the clip. If it is incorrectly handled in any way, the pipe will need to be replaced.

- ❑ Pull out the clutch control pipe (**2**) one notch to free the bleed hole.

> Note:
> Expect some brake fluid to run out.

- ❑ Connect a transparent pipe to the bleed hole (**3**) and place an empty container under the bleed hole.
- ❑ Depress the clutch pedal with your hand (to drain the clutch master cylinder and the clutch pipe).

JR5, and LEFT-HAND DRIVE

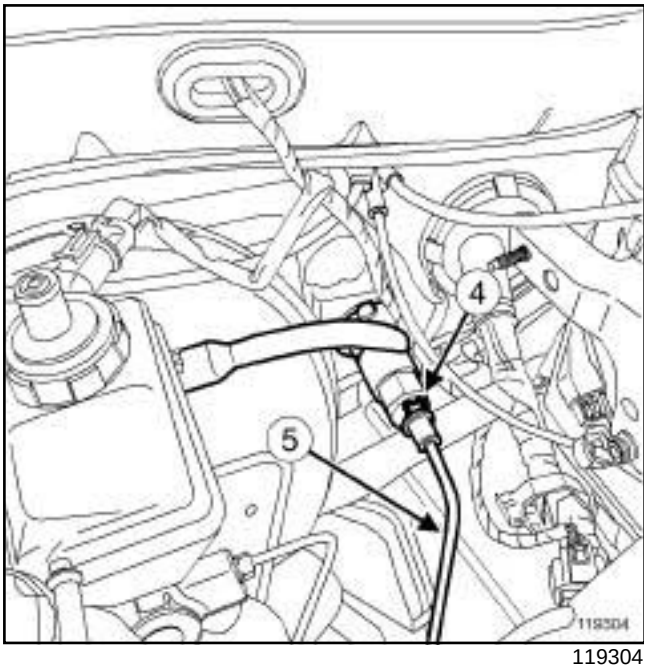

119304

- Remove the retaining clip (**4**) of the clutch master cylinder-slave cylinder connecting pipe on the clutch master cylinder.
- Place a cloth under the clutch master cylinder.
- Disconnect the pipe (**5**) from the clutch master cylinder.
- Fit plugs into the openings.

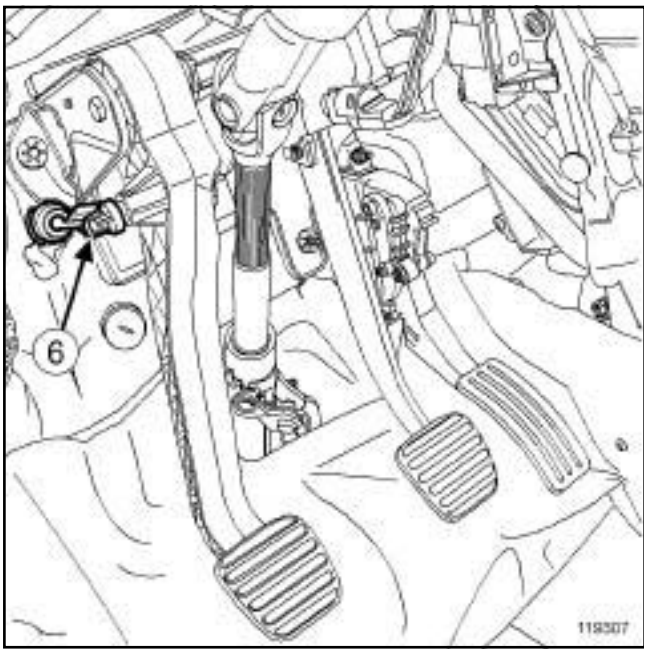

119307

- Disconnect the clutch master cylinder ball joint (**6**) from the clutch pedal in the passenger compartment.

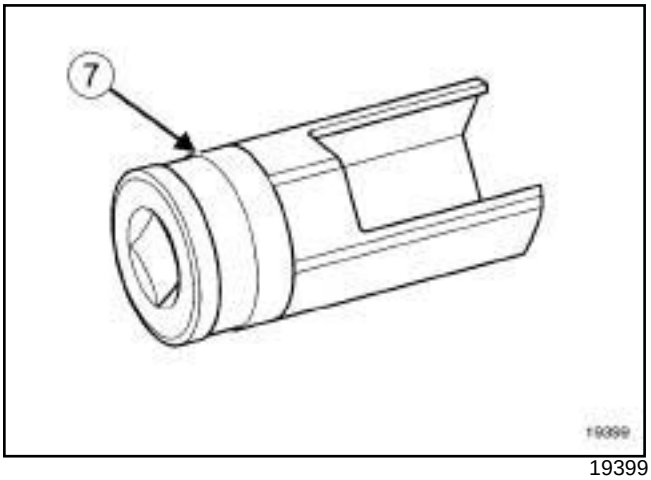

19399

- Remove the clutch master cylinder from the bulkhead by turning it a quarter of a turn clockwise in the engine compartment (bayonet type mounting) using the tool (**7**) or.

REFITTING

I - REFITTING PREPARATION OPERATION

- Check the condition of the seals.

> Note:
>
> The clutch master cylinder has a foolproofing device; it only fits in one position.

> **WARNING**
>
> Do not use the take-off pipes as a support when fitting.

II - REFITTING OPERATION FOR PART CONCERNED

- Refit the clutch master cylinder by turning it a quarter of a turn anti-clockwise (bayonet type mounting) using the toolor.
- Refit the clutch master cylinder ball joint on the clutch pedal in the passenger compartment.
- Remove the plugs from the openings.
- Refit the clutch master cylinder-slave cylinder connecting pipe on the clutch master cylinder.

JR5, and LEFT-HAND DRIVE

- ❑ Press the clutch master cylinder clip.

> Note:
>
> Lubricate both ends of the supply pipe with brake fluid to facilitate fitting on the brake fluid reservoir take-off pipe.

- ❑ Refit the pipe between the clutch master cylinder and the brake fluid reservoir.

> Note:
>
> As you lock the clutch control pipe, you should hear a safety click.

- ❑ Refit the clutch master cylinder-slave cylinder connecting pipe on the slave cylinder.
- ❑ Remove the transparent tube from the bleed hole.

III - FINAL OPERATION

- ❑ Remove the plugs from the openings.
- ❑ Refit the clutch master cylinder supply pipe on the brake fluid reservoir.
- ❑ Refit the expansion bottle.
- ❑ Torque tighten the **expansion bottle nuts (8 N.m)**.
- ❑ Fill the brake fluid reservoir to the correct level.
- ❑ Bleed the clutch circuit (see **37A**, **Mechanical component controls**, **Clutch circuit: Bleed**, page **37A-37**) .

JR5, and LEFT-HAND DRIVE

Tightening torques ▽	
expansion bottle nuts	**8 N.m**

Note:

Each time an operation is carried out on the hydraulic clutch system, bleed the circuit at the following locations:

- between the reservoir and the bleed hole,
- between the bleed hole and the clutch thrust bearing,
- for long pedal travel.

REMOVAL

I - REMOVAL PREPARATION OPERATION

❑ Position the vehicle on a two-post lift (see **Vehicle: Towing and lifting**) (02A, Lifting equipment).

❑ Remove the engine undertray.

❑ Remove the two expansion bottle nuts.

❑ Move aside the expansion bottle.

❑ Disconnect the brake fluid level sensor connector from the reservoir.

❑ Remove the brake fluid filler cap.

❑ Drain the brake fluid reservoir until the fluid level is below the master cylinder supply aperture.

❑ Remove the plug from the bleed hole.

II - OPERATION FOR REMOVAL OF PART CONCERNED

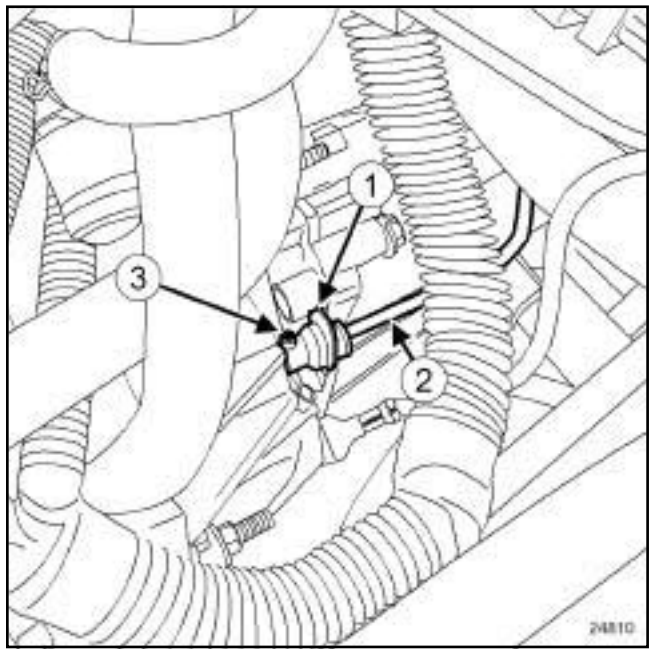

24810

❑ Place a cloth under the clutch slave cylinder.

❑ Press the clip (**1**) .

WARNING
Do not pull the clip. If it is incorrectly handled in any way, the pipe will need to be replaced.

❑ Pull out the clutch control pipe (**2**) by one notch to free the bleed hole.

Note:

Expect some brake fluid to run out.

❑ Connect a transparent pipe to the bleed hole (**3**) and place an empty container under the bleed hole.

❑ Depress the clutch pedal with your hand (to drain the master cylinder and the clutch pipe).

❑ Press the slave cylinder clip (**1**) .

❑ Uncouple the pipe (**2**) from the slave cylinder and place plugs on all the openings.

JR5, and LEFT-HAND DRIVE

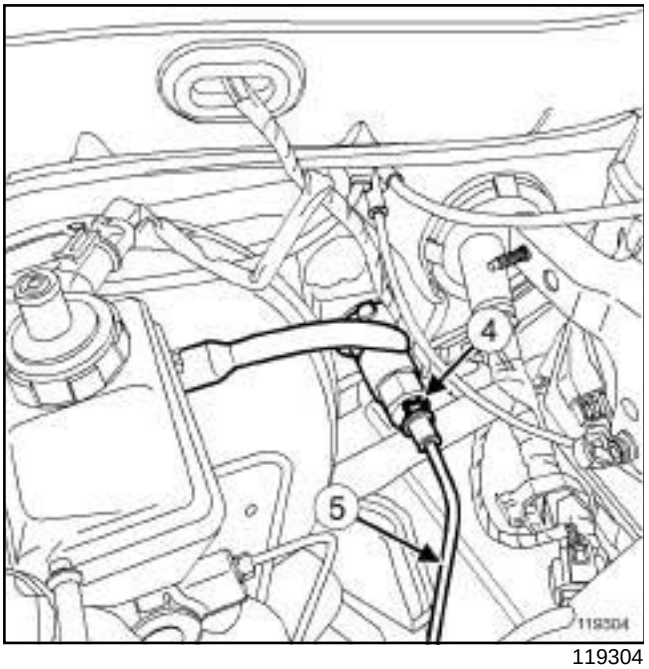

119304

- ❑ Remove the master cylinder-slave cylinder connecting pipe retaining clip (**4**) on the master cylinder.
- ❑ Place a cloth under the master cylinder.
- ❑ Disconnect the pipe (**5**) on the master cylinder in the engine compartment.
- ❑ Fit plugs into the openings.

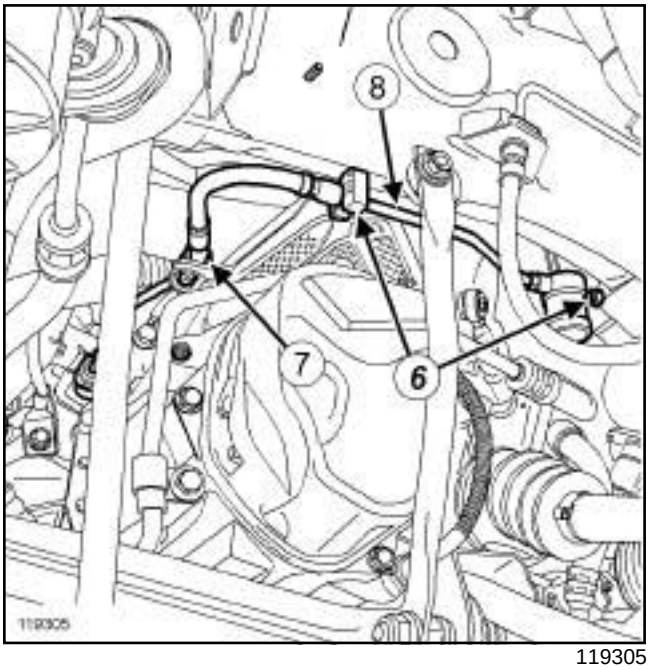

119305

- ❑ Unclip:
  - the master cylinder-slave cylinder connecting pipe from the body (**6**) ,
  - the master cylinder-slave cylinder connecting pipe from the gearbox at (**7**) .
- ❑ Remove the master cylinder-slave cylinder connecting pipe (**8**) .

REFITTING

I - REFITTING PREPARATION OPERATION

- ❑ Check the condition of the seals.
- ❑ Remove the plugs from the openings.

II - REFITTING OPERATION FOR PART CONCERNED

- ❑ Fit the master cylinder-slave cylinder connecting pipe.
- ❑ Clip the master cylinder-slave cylinder connecting pipe:
  - on the gearbox,
  - on the body.
- ❑ Connect the pipe to the master cylinder in the engine compartment.
- ❑ Refit the clip securing the master cylinder-slave cylinder connecting pipe to the master cylinder.

JR5, and LEFT-HAND DRIVE

- ❑ Connect the pipe to the slave cylinder.

> Note:
>
> As you lock the clutch control pipe, you should hear a safety click.

III - FINAL OPERATION

- ❑ Refit the expansion bottle.
- ❑ Torque tighten the **expansion bottle nuts (8 N.m)**.
- ❑ Fill the brake fluid reservoir to the correct level.
- ❑ Bleed the clutch circuit (see **37A**, **Mechanical component controls**, **Clutch circuit: Bleed**, page **37A-37**) .
- ❑ Refit the engine undertray.

JR5

Tightening torques ▽	
gear control unit bolts	**21 N.m**
exhaust pipe mountings	**21 N.m**
expansion bottle nuts	**8 N.m**

REMOVAL

I - REMOVAL PREPARATION OPERATION

❑ Position the vehicle on a two-post lift (see **Vehicle: Towing and lifting**) (02A, Lifting equipment).

❑ Disconnect the battery (see **Battery: Removal - Refitting**) (80A, Battery).

❑ Remove the expansion bottle nuts.

❑ Move aside the expansion bottle from its support.

K9K

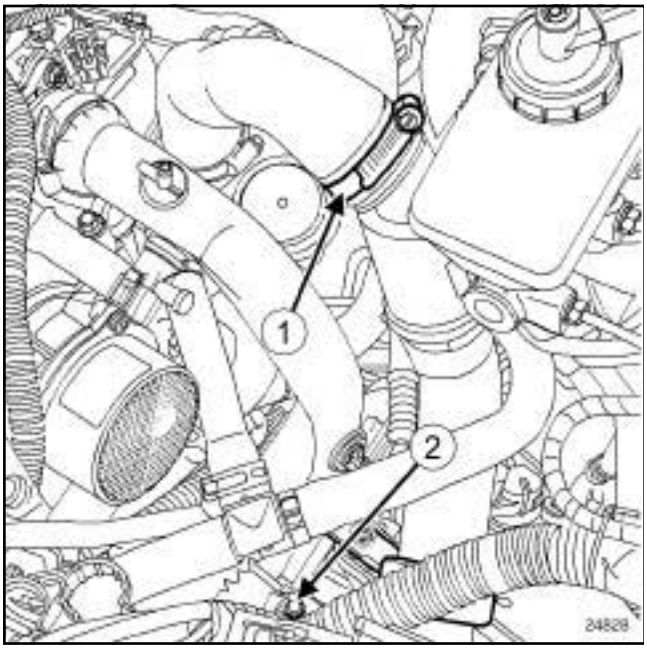

24828

❑ Disconnect the air duct between the turbocharger and the intercooler at (**1**) .

❑ Remove the air duct nut (**2**) on the gearbox.

❑ Move aside the air duct.

II - REMOVAL OPERATION

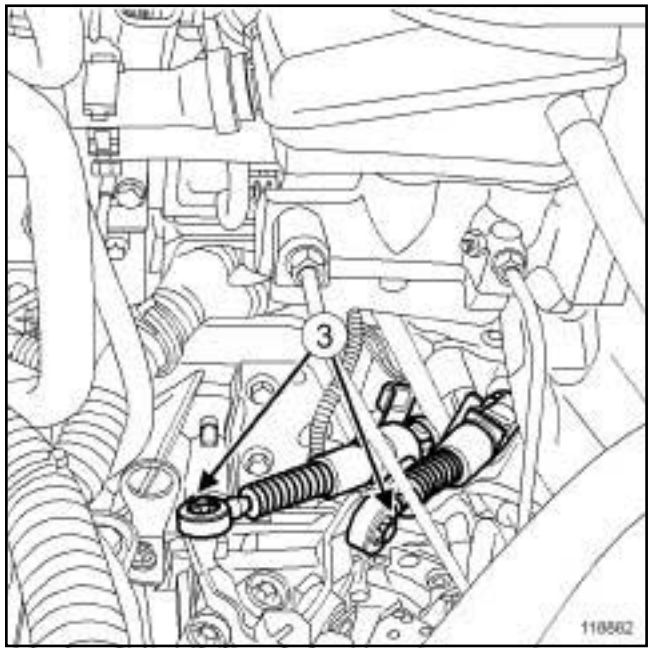

118882

❑ Unclip the gear control cables on the gearbox at (**3**) .

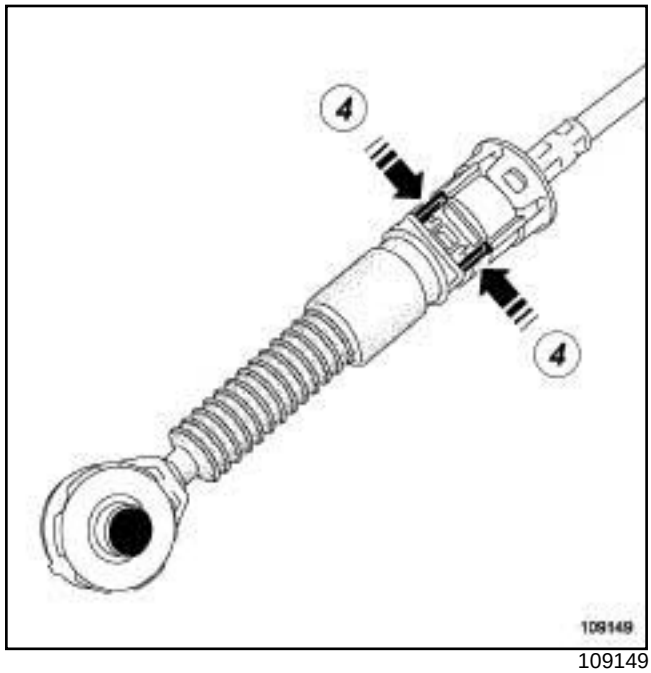

109149

❑ Detach the gear control cable sleeve stops from the gearbox by pressing at (**4**) .

JR5

K9K

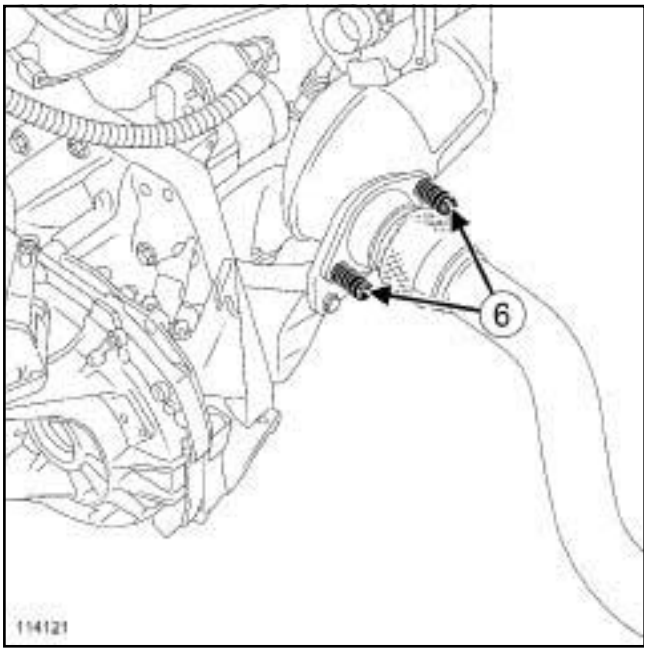

114121

❑ Remove the exhaust pipe mountings (**6**) from the catalytic converter.

K4M

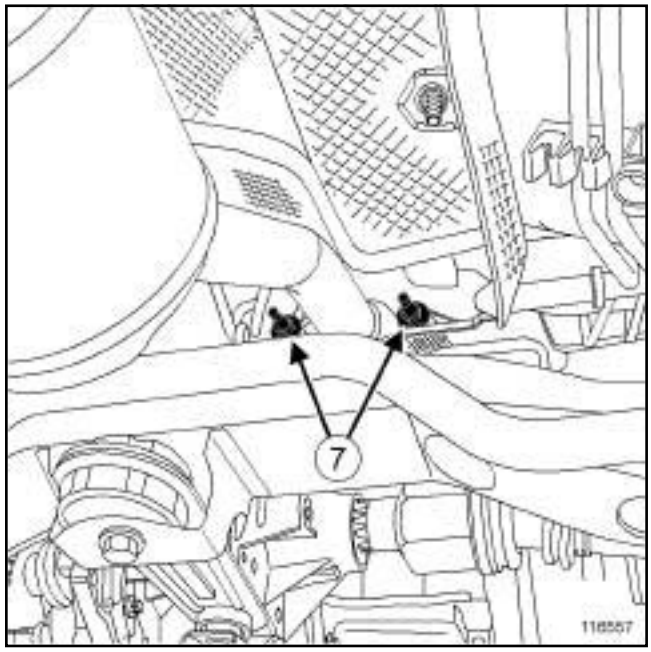

116557

❑ Remove the exhaust pipe mountings (**7**) .

❑ Move aside the exhaust pipe.

K4M

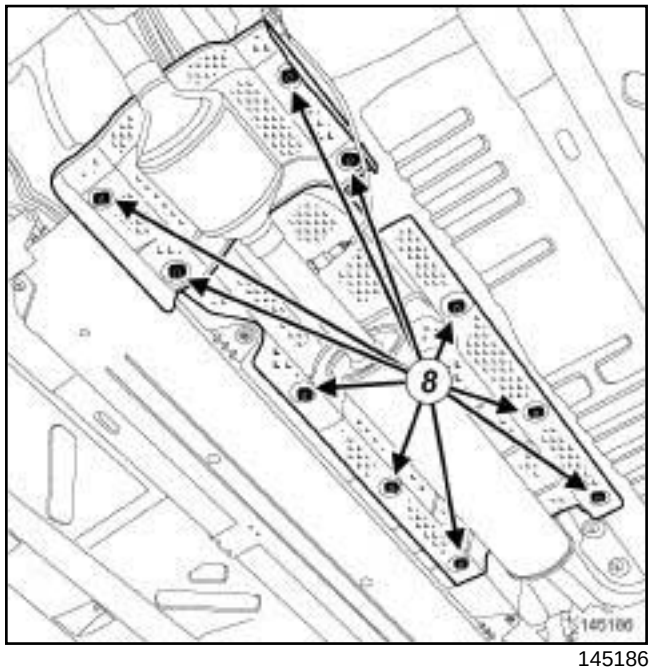

145186

❑ Remove:

- the nuts (**8**) from the heat shield,

JR5

- the heat shield.

❑ Remove the centre console (see **Centre console: Removal - Refitting**) (57A, Interior equipment).

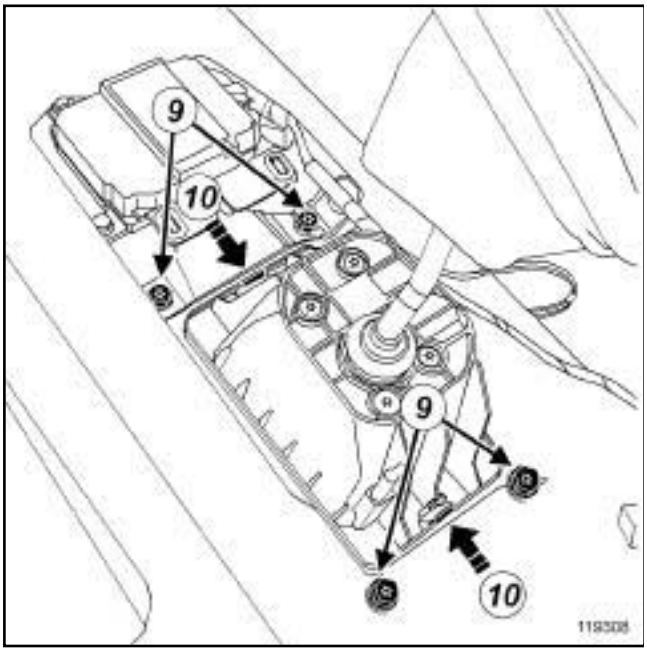

119308

❑ Remove the gear control unit bolts (**9**) .

❑ Unclip the gear selection unit from the floor at (**10**) .

❑ Lower the gearbox control unit so it is resting on the exhaust.

❑ Remove the gear control unit by feeding it out between the exhaust and the tunnel.

REFITTING

I - REFITTING PREPARATION OPERATION

❑

> Note:
>
> The external control unit and the control levers on the gearbox must be in the neutral position to facilitate attachment of the control cables to the gearbox.

II - REFITTING OPERATION FOR PART CONCERNED

❑ Position the gear control unit.

❑ Clip the gear control unit onto the floor.

❑ Torque tighten the **gear control unit bolts (21 N.m)**.

❑ Refit the centre console (see **Centre console: Removal - Refitting**) (57A, Interior equipment).

K4M

❑ Refit:

- the heat shield,
- the heat shield nuts,

❑ Refit the exhaust pipe mountings on the catalytic converter.

❑ Torque tighten the **exhaust pipe mountings (21 N.m)**.

❑ Clip:

- the gear control cable sheath stops on the gearbox,
- the control cables to the gearbox.

III - FINAL OPERATION

K9K

❑ Refit the air duct nut on the gearbox.

❑ Connect the air duct between the turbocharger and the intercooler at ***(1)*** .

❑ Refit the expansion bottle on its support.

❑ Torque tighten the **expansion bottle nuts (8 N.m)**.

❑ Connect the battery (see **Battery: Removal - Refitting**) (80A, Battery).

REMOVAL

I - REMOVAL PREPARATION OPERATION

❏ Position the vehicle on a two-post lift (see **Vehicle: Towing and lifting**) (02A, Lifting equipment).

❏ Remove:

- the central console (see **Centre console: Removal - Refitting**) (57A, Interior equipment),
- the rear wheels (see **35A**, **Wheels and tyres**, **Wheel: Removal - Refitting**, page **35A-1**) ,
- the rear brake drums (see **33A**, **Rear axle components**, **Rear brake drum: Removal - Refitting**, page **33A-7**) .

II - OPERATION FOR REMOVAL OF PART CONCERNED

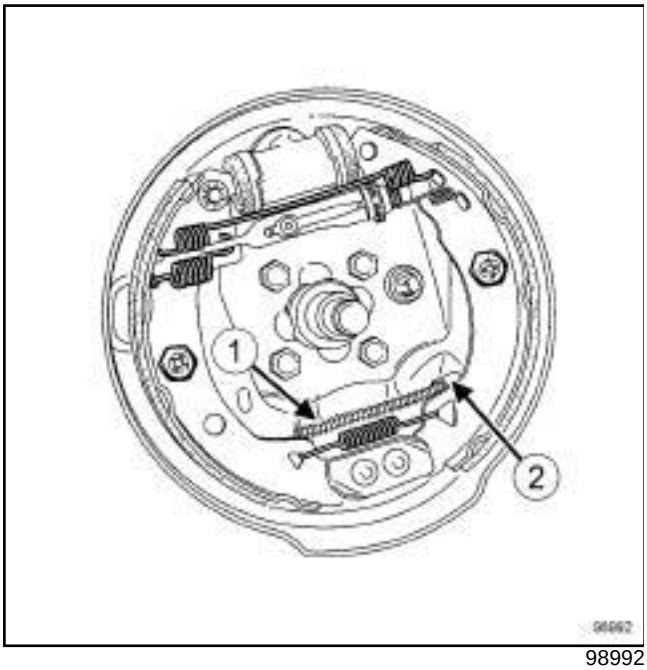

98992

❏ Remove the parking brake cable (**1**) from the lever using pliers and a screwdriver.

❏ Unclip the parking brake cable sheath (**2**) from the drum back-plate.

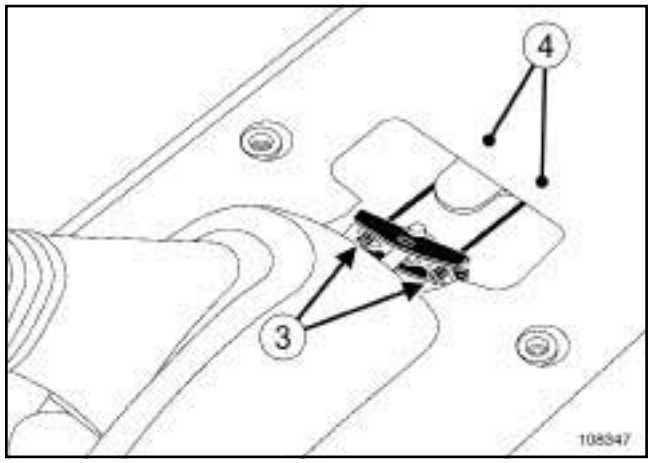

108347

❏ Unclip:

- the cables (**3**) from their housing,
- the sheaths from their stop on the body (**4**) using pliers,

❏ Unclip the parking brake cables from their guides.

❏ Remove the parking brake cables.

REFITTING

I - REFITTING OPERATION FOR PART CONCERNED

❏ Refit the parking brake cables.

❏ Hook the parking brake cables onto their guides.

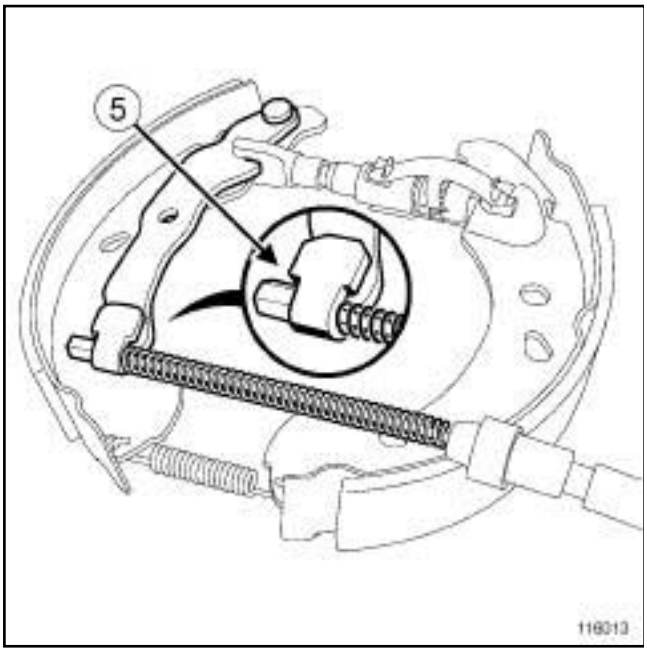

116013

- ❑ Reattach the parking brake cable sheath onto the drum back-plate.
- ❑ Refit the parking brake cable back into the lever housing using a pair of pliers and a screwdriver.
- ❑ Check that the cables (**5**) are correctly positioned on the levers.
- ❑ Reattach the sheath to its stop on the bodywork.
- ❑ Clip on:
  - the cables (**3**) to the control lever,
  - the sheaths to their stop on the body (**4**) .
- ❑ Adjust the parking brake cables (see **37A**, **Mechanical component controls**, **Parking brake lever: Adjustment**, page **37A-30**) .

II - FINAL OPERATION

- ❑ Refit:
  - the rear brake drums (see **33A**, **Rear axle components**, **Rear brake drum: Removal - Refitting**, page **33A-7**) ,
  - the rear wheels (see **35A**, **Wheels and tyres**, **Wheel: Removal - Refitting**, page **35A-1**) ,
  - the central console (see **Centre console: Removal - Refitting**) (57A, Interior equipment).

Special tooling required	
Ms. 583	Pipe clamps.

CHECKING THE SEALS

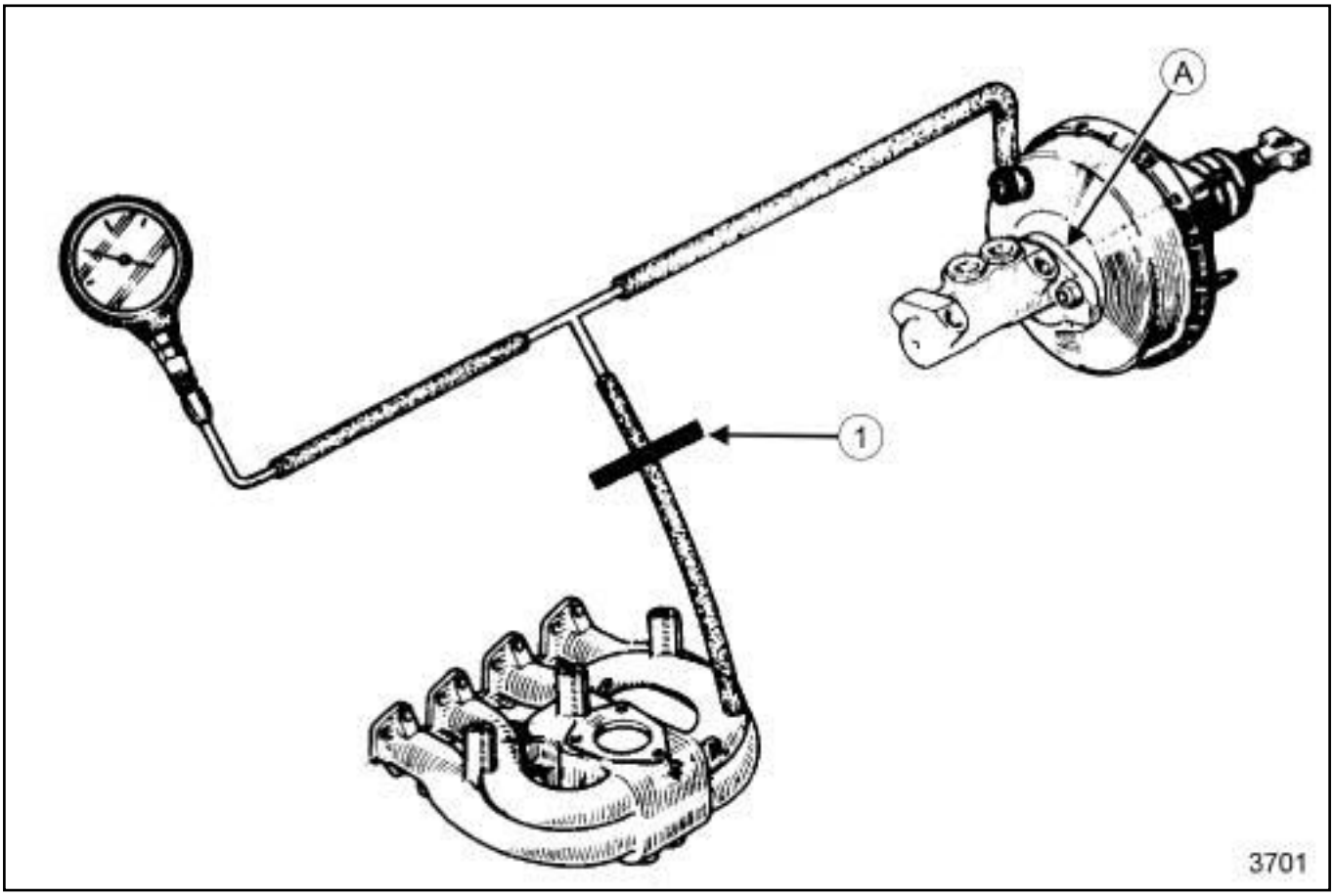

3701

- When checking the brake servo seals, ensure that there is a perfect seal between this and the master cylinder. If there is a leak here, replace the seal (**A**) .

  The brake servo seals must be checked when fitted on the vehicle and when the hydraulic circuit is operational.

- Connect thebetween the brake servo and the vacuum source (inlet manifold) with a « T » union and the shortest possible pipe.

- Let the engine idle for approximately 10 minutes.

- Press the pipe between the « T » union and the vacuum source using the **(Ms. 583)** (**1**) .

  If the vacuum drops by more than **33 mbar** in **15 seconds**, there is a leak either:

  - at the non-return valve (replace it),
  - at the pushrod diaphragm (if this is the case, you should replace the brake servo).

If the brake servo is not operational, the braking system will operate but the force required at the pedal to obtain the equivalent deceleration as for assisted braking is considerably higher.

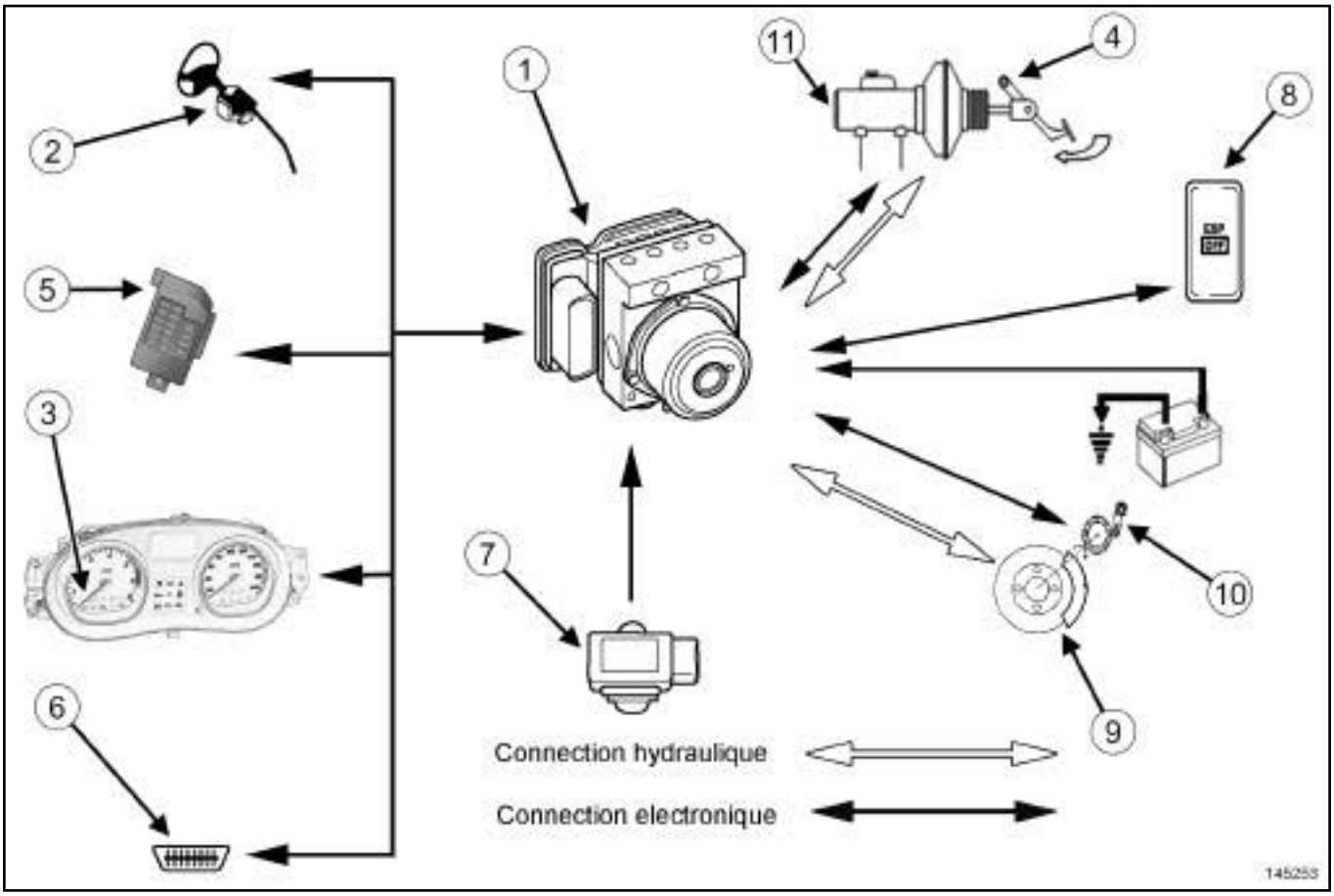

145253

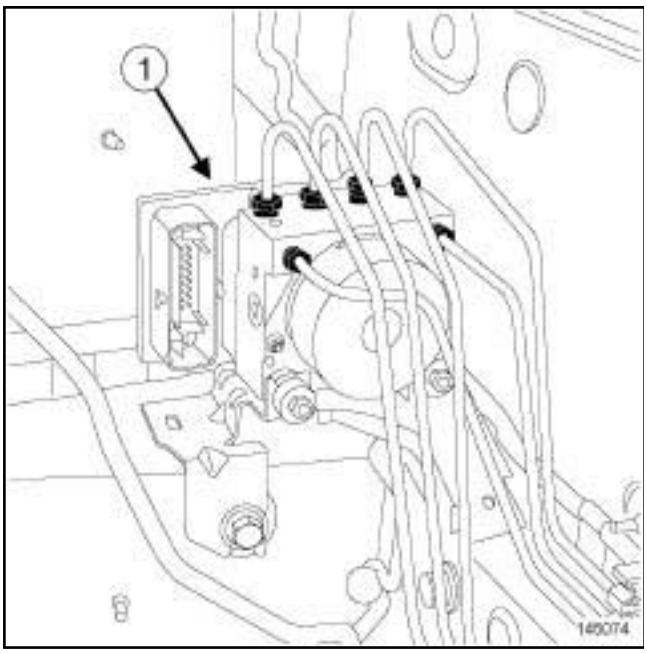

145074

(**1**) Hydraulic unit

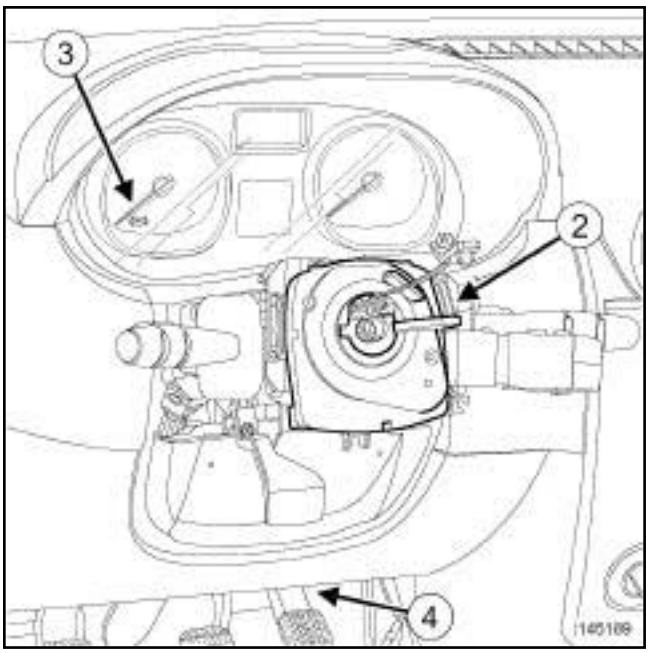

145189

(**2**) Steering wheel angle sensor

(**3**) ABS warning light on the instrument panel

(**4**) Brake lights switch

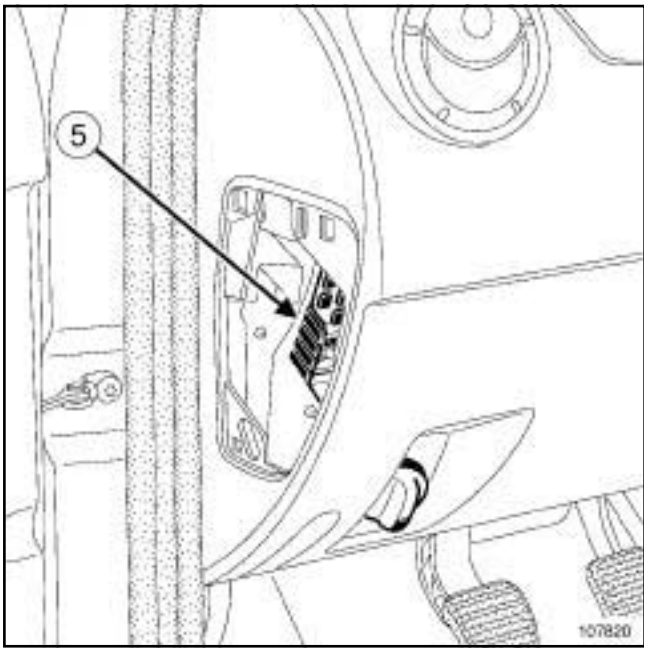

107820

(**5**) Fuse box

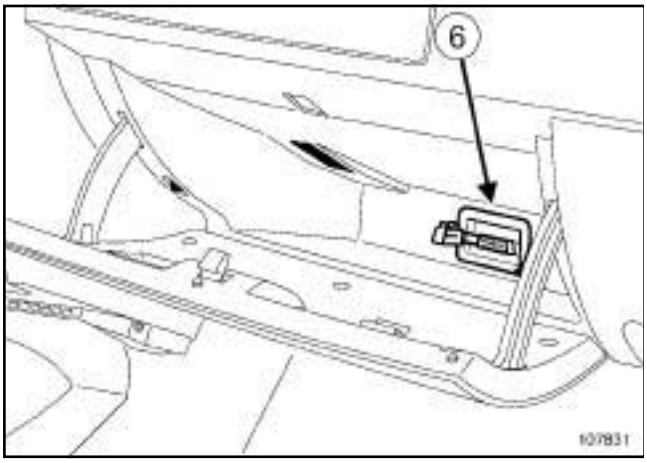

107831

(**6**) Diagnostic socket

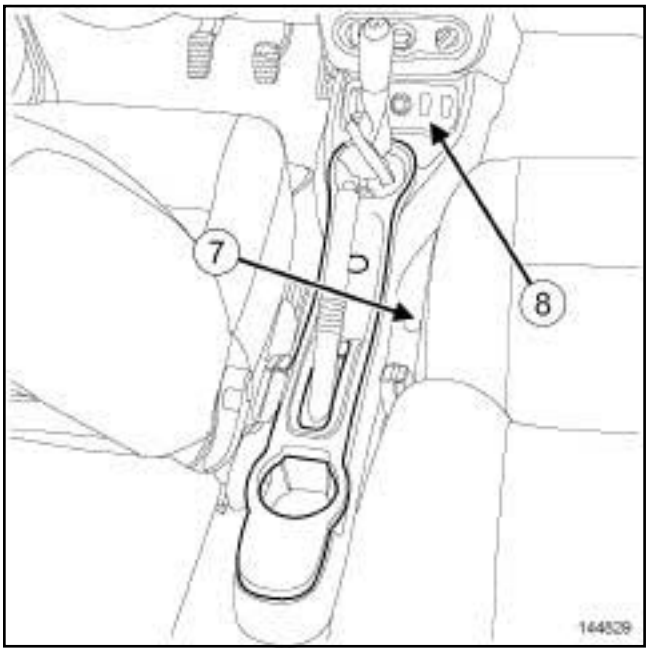

144829

(**7**) Lateral acceleration and yaw speed sensor

(**8**) ESP deactivation switch

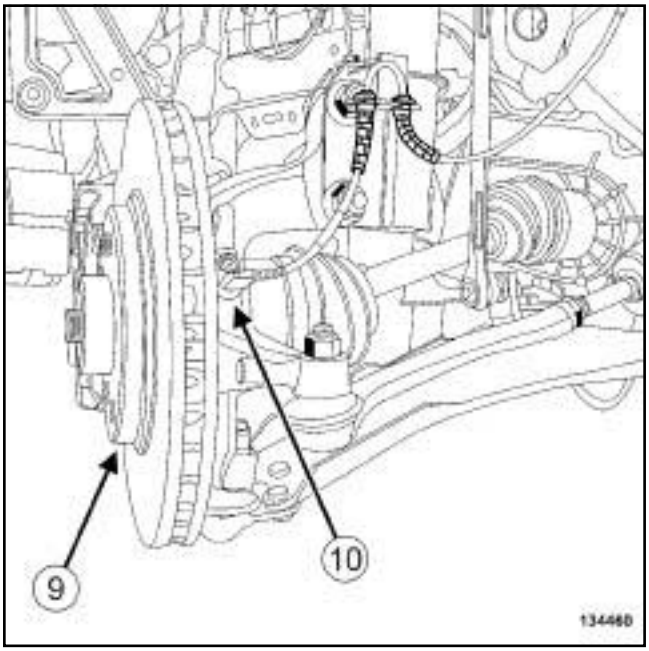

134460

(**9**) Brake disc with instrumented bearing

(**10**) Wheel speed sensor

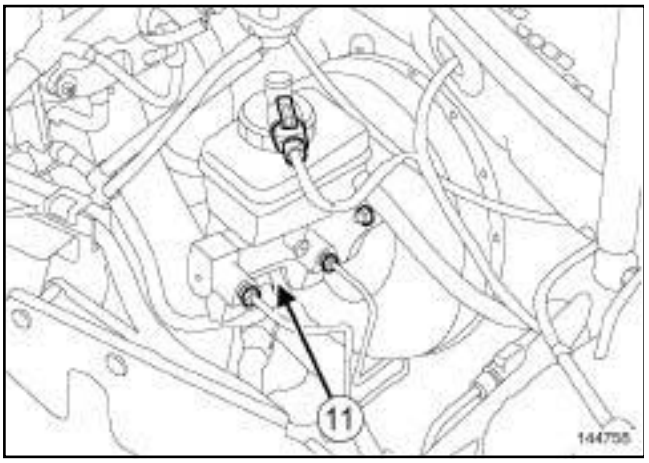

144758

(**11**) Master cylinder

Equipment required
pedal press
Diagnostic tool

I - SAFETY

- If a lift must be used for an operation, respect the safety instructions (see **Vehicle: Towing and lifting**) (02A, Lifting equipment).

- Protect any bodywork components which could be damaged by brake fluid with covers.

- to ensure there is no risk of sparks, do not place any metallic objects on the battery.

- Brake fluid is highly corrosive. Carefully clean any brake fluid spilt on parts of the vehicle.

II - CLEANLINESS

- Clean around the braking system with **BRAKE CLEANER** (see **Vehicle: Parts and consumables for the repair**) (04B, Consumables - Products).

- If a component is being replaced by a new one, do not remove the new component from its packaging until its is ready to be fitted onto the vehicle.

WARNING
Prepare for the flow of fluid, and protect the surrounding components.

III - GENERAL RECOMMENDATIONS

- During an operation which requires the braking circuit to be opened, position a **pedal press** on the brake pedal to limit the outflow of brake fluid.

- After any operation on the ABS, it is essential to confirm the repair with a road test and a check using the **Diagnostic tool**.

1 - Yaw speed and lateral acceleration sensor

The sensor must be fitted facing the vehicle's direction of travel (as shown by the arrow).

Be sure to replace any sensor which has sustained an impact.

2 - Hydraulic unit

WARNING
Switch off the vehicle ignition so as not to activate the hydraulic unit solenoid valves when bleeding the brake circuit.

3 - Wheel speed sensor

WARNING
To ensure that the wheel speed sensor works properly, do not mark the sensor target on the bearing.

WARNING

In order to prevent irreversible damage to the front hub bearing:

- Do not loosen or tighten the driveshaft nut when the wheels are on the ground.
- Do not place the vehicle with its wheels on the ground when the driveshaft has been loosened or removed.

4 - Brake servo

IMPORTANT
To avoid breaking the connection between the brake servo pushrod and the brake pedal, check that the safety clevis pin is locked onto the brake servo pushrod by tilting it from the top downwards.

ANTI-LOCK BRAKING SYSTEM

Equipment required
pedal press

Tightening torques ▽	
hydraulic brake unit bolts on the support	**8 N.m**
rigid brake pipe unions on the hydraulic brake unit	**13 N.m**
hydraulic brake unit earth wire nut	**8 N.m**

IMPORTANT

To avoid all risk of damage to the systems, apply the safety and cleanliness instructions and operation recommendations before carrying out any repair:

- (see **38C**, **Anti-lock braking system**, **ABS: Precautions for the repair**, page **38C-4**) ,
- (see) (01D, Mechanical introduction).

WARNING

Prepare for the flow of fluid, and protect the surrounding components.

REMOVAL

I - REMOVAL PREPARATION OPERATION

❑ Disconnect the battery (see **Battery: Removal - Refitting**) (80A, Battery).

❑ Position the **pedal press** on the brake pedal to limit the outflow of brake fluid.

❑ Remove the soundproofing clips from the bulkhead.

❑ Move the soundproofing away from the bulkhead to access the hydraulic brake unit.

II - REMOVAL OPERATION

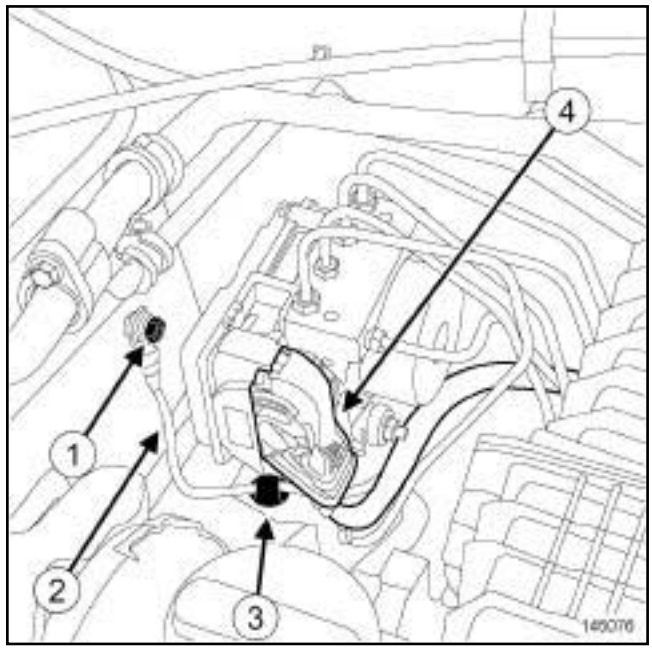

145076

❑ Remove:

- the hydraulic brake unit earth wire nut (**1**) ,
- the hydraulic brake unit earth wire (**2**) .

❑ Unclip the earth wire from the hydraulic brake unit at (**3**) .

❑ Disconnect the hydraulic brake unit connector (**4**) .

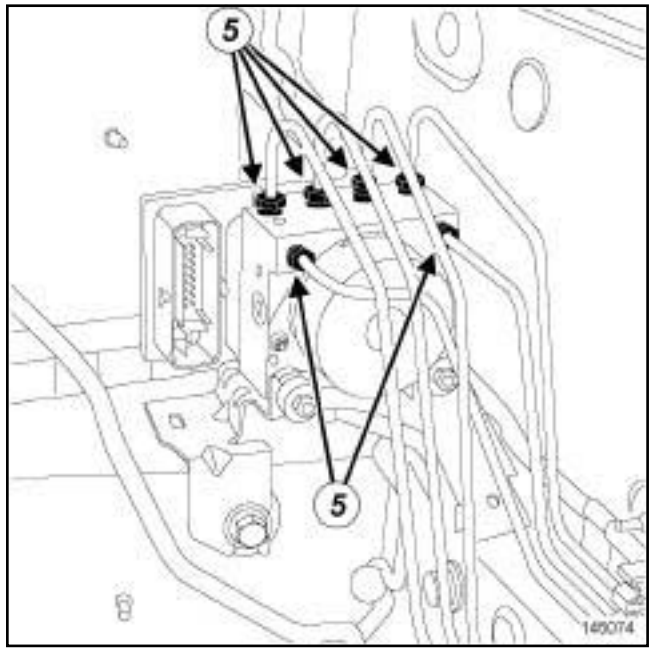

145074

❑ Unscrew the rigid pipe unions (**5**) from the hydraulic brake unit.

❑ Fit blanking plugs on the openings of the hydraulic unit and brake pipes.

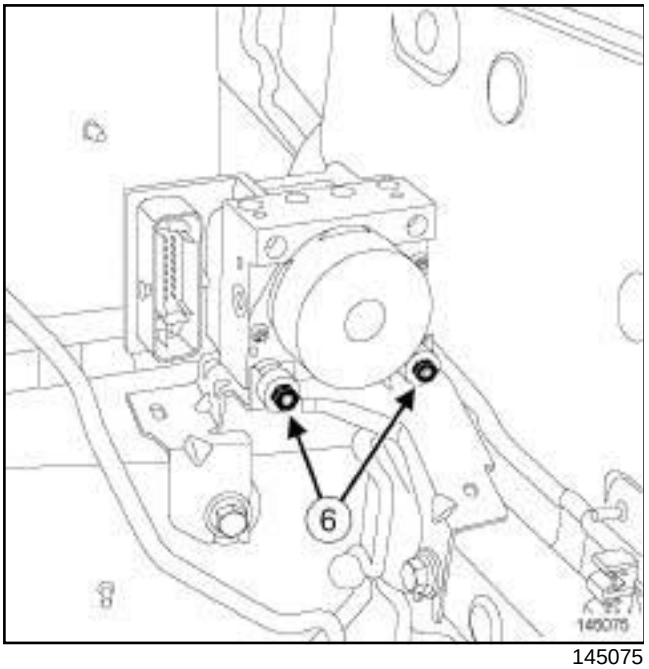

145075

❑ Remove:

- the hydraulic brake unit bolts (**6**) from its mounting,
- the hydraulic brake unit.

REFITTING

I - REFITTING PREPARATION OPERATION

❑

> **WARNING**
> Do not remove the blanking plugs from each component until the last moment.
>
> Also, do not remove the components from their packaging until they are to be fitted to the vehicle.

> **WARNING**
> To prevent any premature wear, ensure that there is no contact between the rigid pipe and the body.

II - REFITTING OPERATION

❑ Proceed in the reverse order to removal.

❑ Torque tighten:

- the **hydraulic brake unit bolts on the support (8 N.m)**,
- the **rigid brake pipe unions on the hydraulic brake unit (13 N.m)**,
- the **hydraulic brake unit earth wire nut (8 N.m)**.

❑ Bleed the brake circuit (see **30A**, **General information**, **Braking circuit: Bleed**, page **30A-4**) .

Tightening torques ▽	
front wheel speed sensor bolt	**7 N.m**

IMPORTANT
To avoid all risk of damage to the systems, apply the safety and cleanliness instructions and operation recommendations before carrying out any repair (see **38C**, **Anti-lock braking system**, **ABS: Precautions for the repair**, page **38C-4**) .

REMOVAL

I - REMOVAL PREPARATION OPERATION

❑ Position the vehicle on a two-post lift (see **Vehicle: Towing and lifting**) (02A, Lifting equipment).

❑ Remove:

- the front wheel (see **35A**, **Wheels and tyres**, **Wheel: Removal - Refitting**, page **35A-1**) ,
- the front wheel arch liner (see **Front wheel arch liner: Removal - Refitting**) (55A, Exterior protection).

II - REMOVAL OPERATION

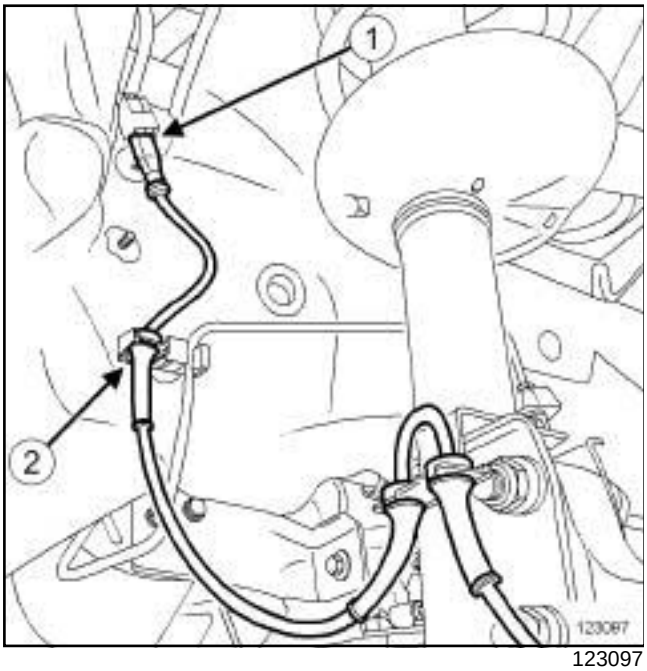

123097

❑ Disconnect the front wheel speed sensor connector (**1**) .

❑ Unclip the front wheel speed sensor wiring at ***(2)*** .

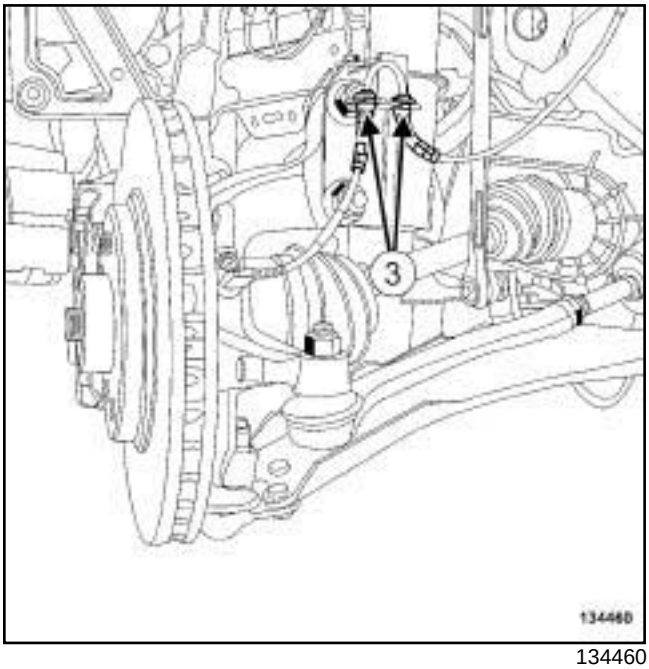

134460

❑ Unclip the front wheel speed sensor wiring at (**3**) .

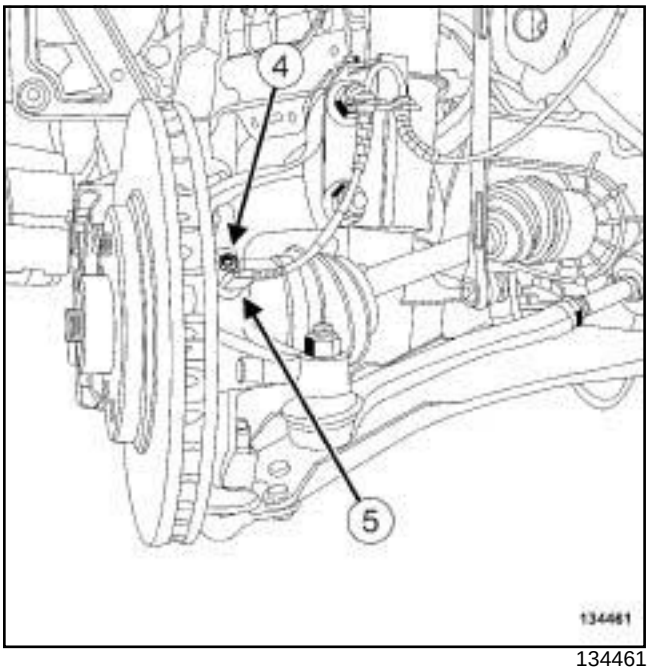

134461

❑ Remove:

- the front wheel speed sensor bolt (**4**) ,
- the front wheel speed sensor (**5**) .

ANTI-LOCK BRAKING SYSTEM

REFITTING

❏

WARNING

To avoid damaging the wheel speed sensor cable:

- Do not tension the cable,
- Do not twist the cable,
- Check that there is no contact with the surrounding components,
- Do not use tools that may damage the cable.

❏ Proceed in the reverse order to removal.

❏ Torque tighten the **front wheel speed sensor bolt (7 N.m)**.

ANTI-LOCK BRAKING SYSTEM

Tightening torques ▽	
rear wheel speed sensor protective screen nuts	**14 N.m**
wheel speed sensor bolt	**7 N.m**

IMPORTANT
To avoid all risk of damage to the systems, apply the safety and cleanliness instructions and operation recommendations before carrying out any repair (see **38C**, **Anti-lock braking system**, **ABS: Precautions for the repair**, page **38C-4**) .

REMOVAL

I - REMOVAL PREPARATION OPERATION

❏ Position the vehicle on a two-post lift (see **Vehicle: Towing and lifting**) (02A, Lifting equipment).

❏ Remove the rear wheel (see **35A**, **Wheels and tyres**, **Wheel: Removal - Refitting**, page **35A-1**) .

II - OPERATION FOR REMOVAL OF PART CONCERNED

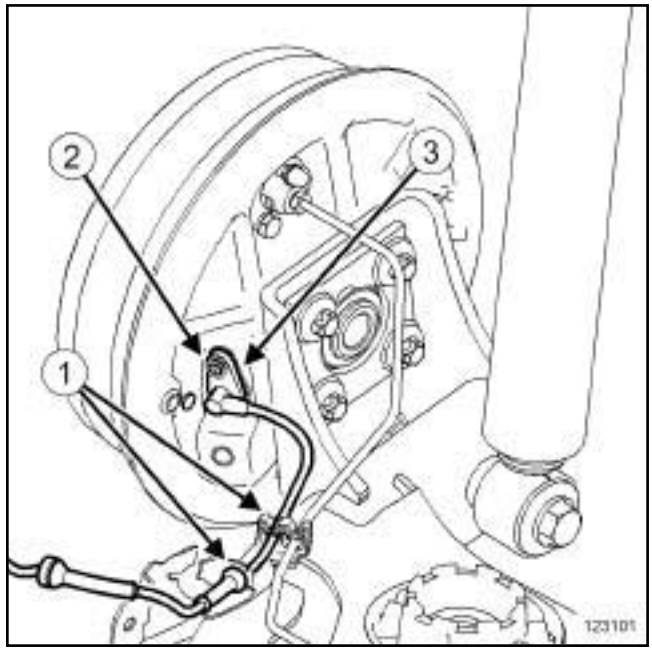

123101

❏ Detach the rear wheel speed sensor at (**1**) .

❏ Remove the rear wheel speed sensor bolt (**2**) on the brake back-plate.

❏ Disconnect the rear wheel speed sensor (**3**) from the brake back-plate retaining bracket.

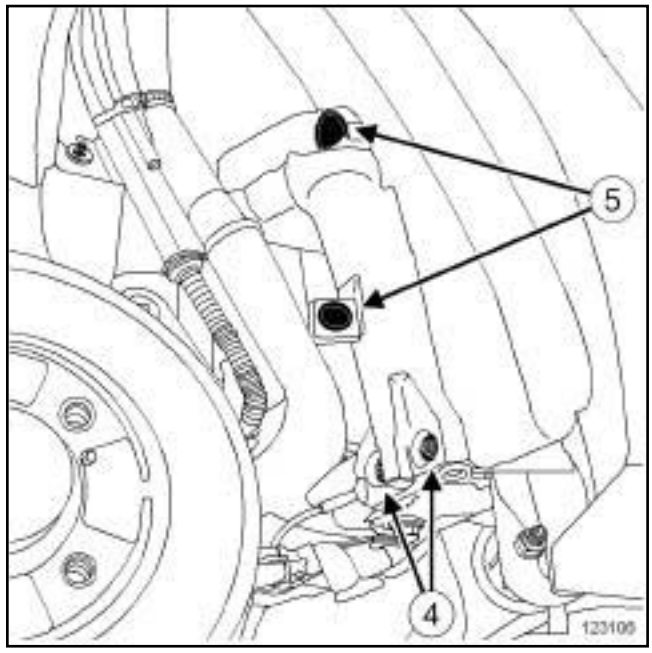

123106

❏ Remove:

- the nuts (**4**) from the rear wheel speed sensor protective screen,

- the clips (**5**) from the rear wheel speed sensor protective screen.

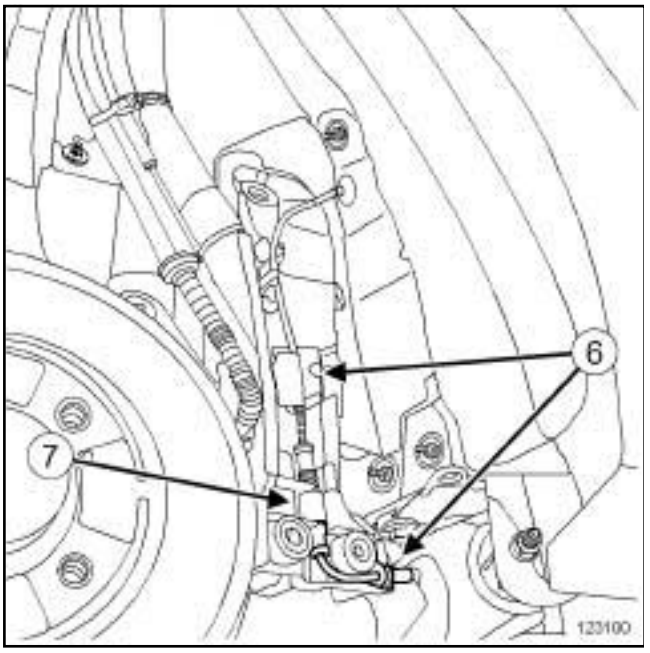

123100

❑ Pull away and slightly fold down the rear wheel speed sensor protective screen.

❑ Detach the rear wheel speed sensor at (**6**) .

❑ Disconnect the wheel speed sensor connector (**7**) on the rear ABS wiring.

❑ Remove the rear wheel speed sensor.

REFITTING

I - REFITTING OPERATION FOR PART CONCERNED

❑

WARNING

To avoid damaging the wheel speed sensor cable:

- Do not tension the cable,
- Do not twist the cable,
- Check that there is no contact with the surrounding components,
- Do not use tools that may damage the cable.

❑ Connect the wheel speed sensor connector on the rear ABS wiring.

❑ Clip the wheel speed sensor onto the rear wheel speed sensor protective screen.

❑ Refit:

- the rear wheel speed sensor protective screen on the body,
- the rear wheel speed sensor protective screen nuts,
- the rear wheel speed sensor protective screen clips.

❑ Torque tighten the **rear wheel speed sensor protective screen nuts (14 N.m)**.

❑ Refit the rear wheel speed sensor on the brake back-plate retaining bracket.

❑ Refit the rear wheel speed sensor bolt.

❑ Torque tighten the **wheel speed sensor bolt (7 N.m)**.

❑ Clip on the rear wheel speed sensor.

II - FINAL OPERATION

❑ Refit the rear wheel (see **35A**, **Wheels and tyres**, **Wheel: Removal - Refitting**, page **35A-1**) .

RENAULT

5 Mechanisms and accessories

51A SIDE OPENING ELEMENT MECHANISMS

52A NON-SIDE OPENING ELEMENT MECHANISMS

54A WINDOWS

55A EXTERIOR PROTECTION

56A EXTERIOR EQUIPMENT

57A INTERIOR EQUIPMENT

X79

NOVEMBER 2009 EDITION ANGLAISE

"The repair procedures given by the manufacturer in this document are based on the technical specifications current when it was prepared.

The procedures may be modified as a result of changes introduced by the manufacturer in the production of the various component units and accessories from which the vehicles are constructed".

All rights reserved by Renault.

Copying or translating, in part or in full, of this document or use of the service part reference numbering system is forbidden without the prior written authority of Renault.

© Renault s.a.s 2007

DUSTER - Section 5

Contents

Pages

51A SIDE OPENING ELEMENT MECHANISMS

Front side door window winder handle: Removal - Refitting 51A-1

Rear side door window winder handle: Removal - Refitting 51A-2

Front side door check strap: Removal - Refitting 51A-3

Front side door striker panel: Removal - Refitting 51A-4

Front side door lock: Removal - Refitting 51A-5

Front side door lock barrel: Removal - Refitting 51A-7

Exterior door handle: Removal - Refitting 51A-8

Front side door interior opening control: Removal - Refitting 51A-9

Front side door electric window mechanism: Removal - Refitting 51A-10

Front side door manual window winder mechanism: Removal - Refitting 51A-12

Rear side door striker panel: Removal - Refitting 51A-14

Rear side door lock: Removal - Refitting 51A-15

51A SIDE OPENING ELEMENT MECHANISMS

Rear side door interior opening control: Removal - Refitting 51A-17

Rear side door manual window winder mechanism: Removal - Refitting 51A-18

Rear side door slide mounting: Removal - Refitting 51A-20

Front side door slide mounting: Removal - Refitting 51A-21

Rear side door check strap: Removal - Refitting 51A-23

52A NON-SIDE OPENING ELEMENT MECHANISMS

Exterior rear opening element assembly: Exploded view 52A-1

Bonnet release control: Removal - Refitting 52A-4

Bonnet lock: Removal - Refitting 52A-5

Bonnet release cable: Removal - Refitting 52A-6

Bonnet strut: Removal - Refitting 52A-7

Tailgate lock: Removal - Refitting 52A-8

Contents

52A NON-SIDE OPENING ELEMENT MECHANISMS

Tailgate strut: Removal - Refitting 52A-9

Tailgate exterior opening control: Removal - Refitting 52A-10

54A WINDOWS

Windscreen: Removal - Refitting 54A-1

Front side door sliding window: Removal - Refitting 54A-3

Rear side door sliding window: Removal - Refitting 54A-5

Rear quarter panel window: Removal - Refitting 54A-7

Rear screen: Removal - Refitting 54A-8

55A EXTERIOR PROTECTION

Front bumper assembly: Exploded view 55A-1

Rear bumper assembly: Exploded view 55A-3

Exterior body front trim assembly: Exploded view 55A-5

Front bumper: Removal - Refitting 55A-8

Rear bumper: Removal - Refitting 55A-9

Front wheel arch liner: Removal - Refitting 55A-10

Rear wheel arch liner: Removal - Refitting 55A-11

56A EXTERIOR EQUIPMENT

Exterior body side trim assembly: Exploded view 56A-1

Door mirror: Removal - Refitting 56A-2

Door mirror glass: Removal - Refitting 56A-3

Rear badges: Removal - Refitting 56A-4

57A INTERIOR EQUIPMENT

Dashboard: Removal - Refitting 57A-1

Dashboard: Stripping - Rebuilding 57A-6

Dashboard air vent: Removal - Refitting 57A-7

Glovebox cover: Removal - Refitting 57A-9

Centre console: Removal - Refitting 57A-10

Interior rear-view mirror: Removal - Refitting 57A-12

Sun visor: Removal - Refitting 57A-13

Grab handle: Removal - Refitting 57A-14

MANUAL FRONT WINDOW

REMOVAL

REMOVAL OPERATION

Clipped on window winder handle

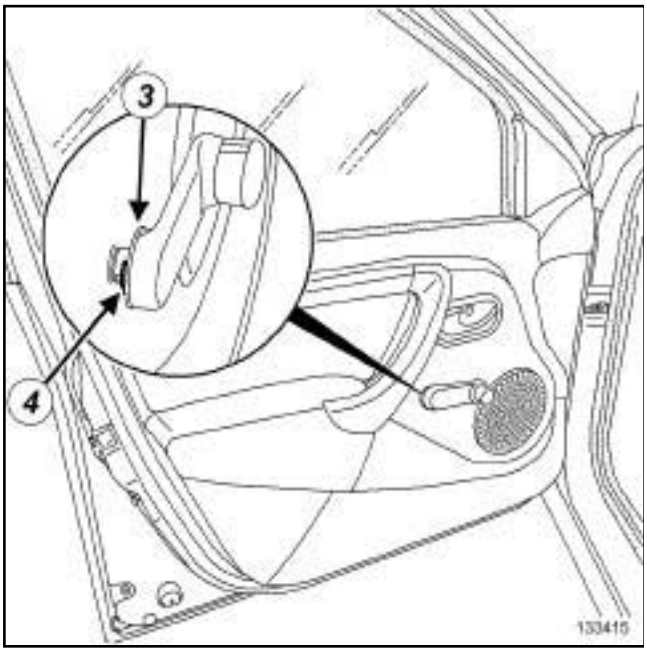

133415

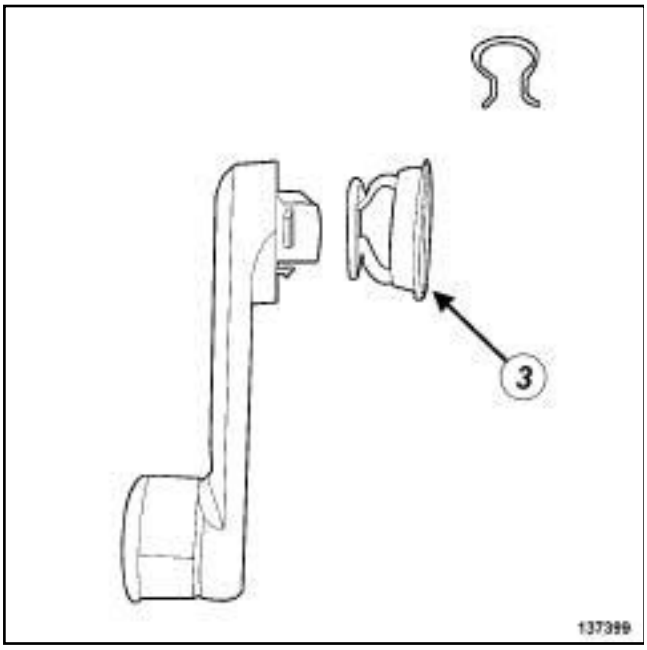

137399

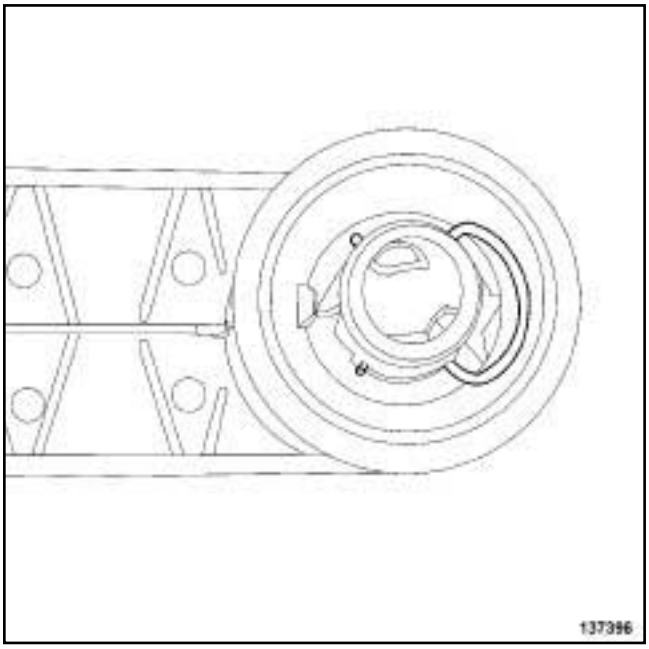

137396

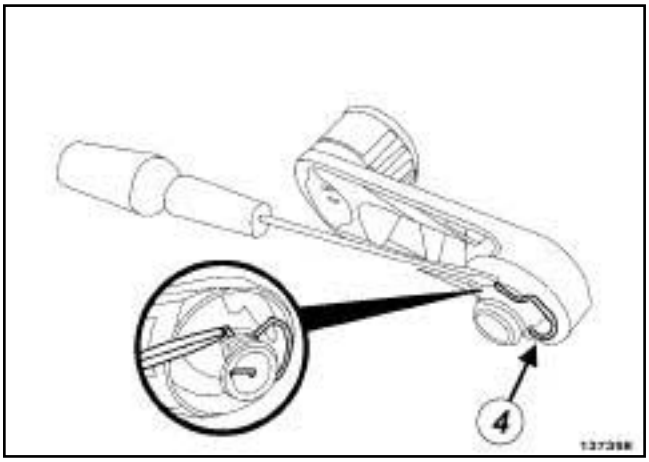

137398

❑ Pull the ring (**3**) towards the vehicle interior.

❑ Unclip the clip (**4**) .

❑ Remove the front side door window winder handle.

REFITTING

REFITTING OPERATION

Clipped on window winder handle

❑ Refit:

- the ring on the front side door window winder handle,
- the front side door window winder handle.

❑ Pull the ring and clip the clip onto the shaft of the front side door window winder handle.

MANUAL REAR WINDOW

REMOVAL

REMOVAL OPERATION

Clipped on window winder handle

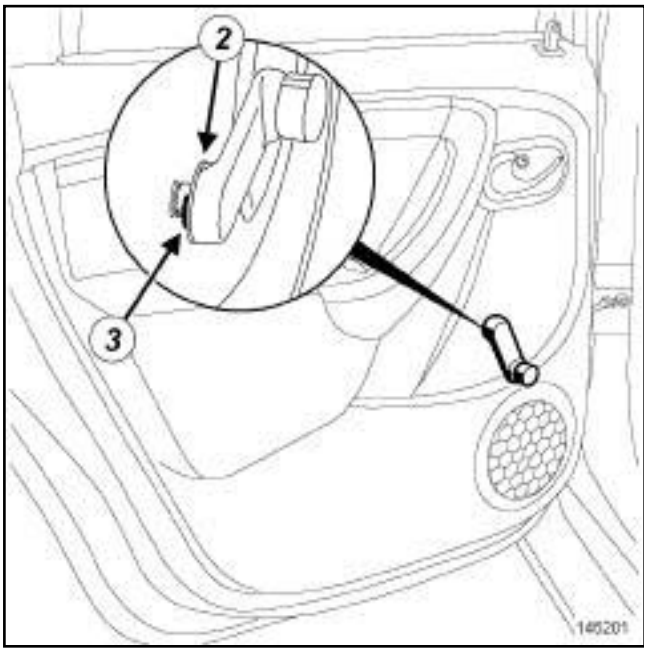

145201

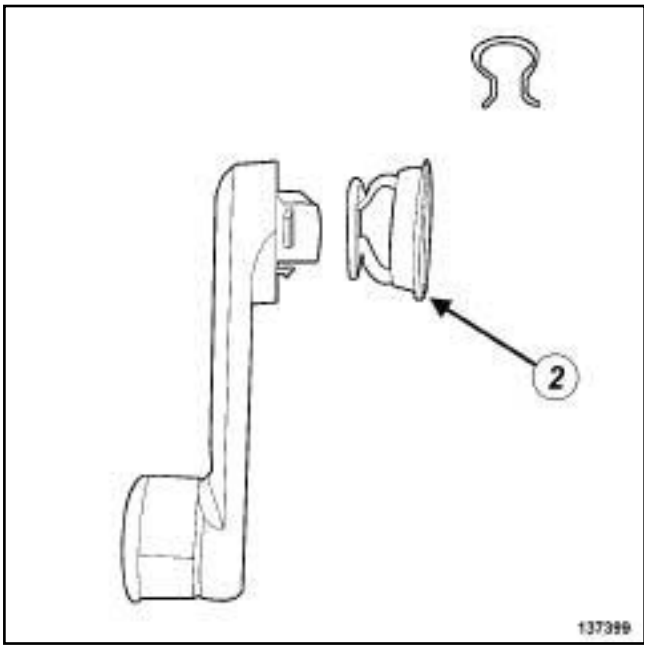

137399

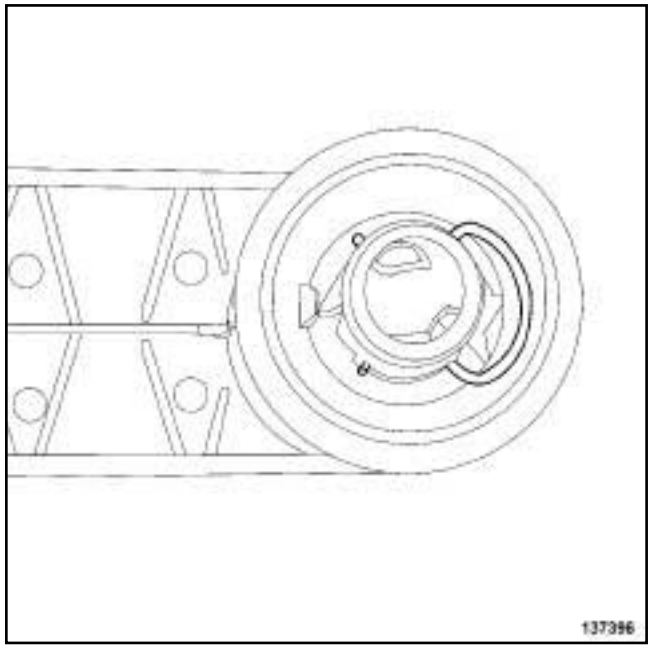

137396

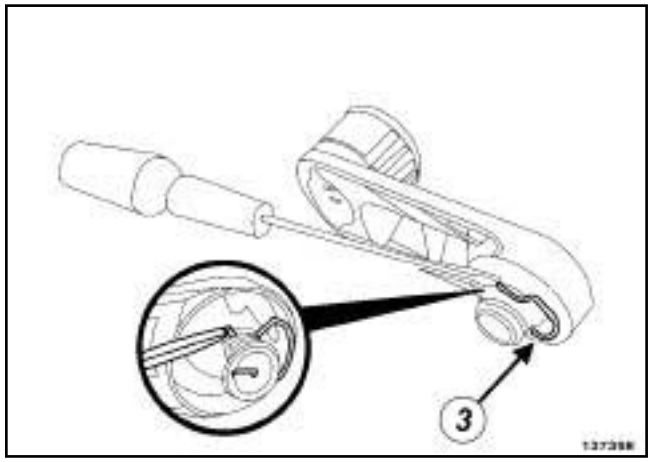

137398

❑ Pull the ring (**2**) towards the vehicle interior.

❑ Unclip the clip (**3**) .

❑ Remove the rear side door window winder handle.

REFITTING

REFITTING OPERATION

Clipped on window winder handle

❑ Refit:

- the ring on the rear side door window winder handle,
- the rear side door window winder handle.

❑ Pull the ring and clip the clip onto the shaft of the rear side door window winder handle.

REMOVAL

I - REMOVAL PREPARATION OPERATION

❏ Remove the front side door trim (see **Front side door trim: Removal - Refitting**) (72A, Side opening elements trim).

II - REMOVAL OPERATION

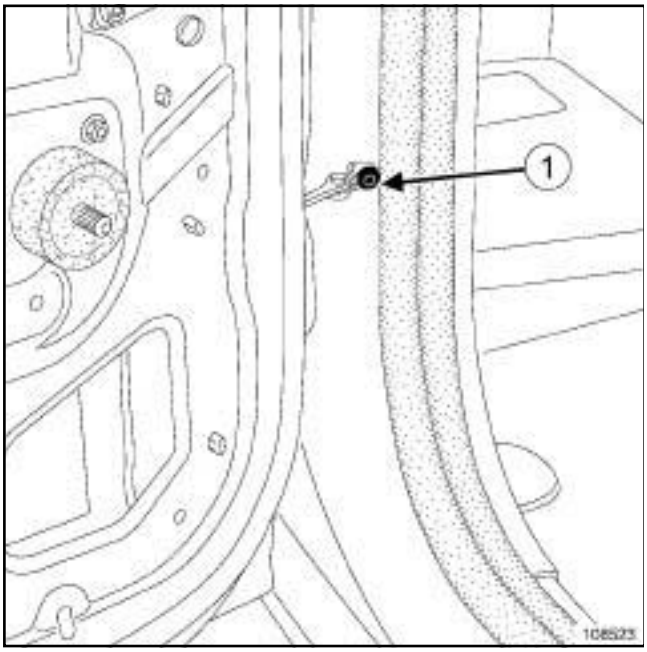

108523

❏ Remove the front side door check strap bolt (**1**) .

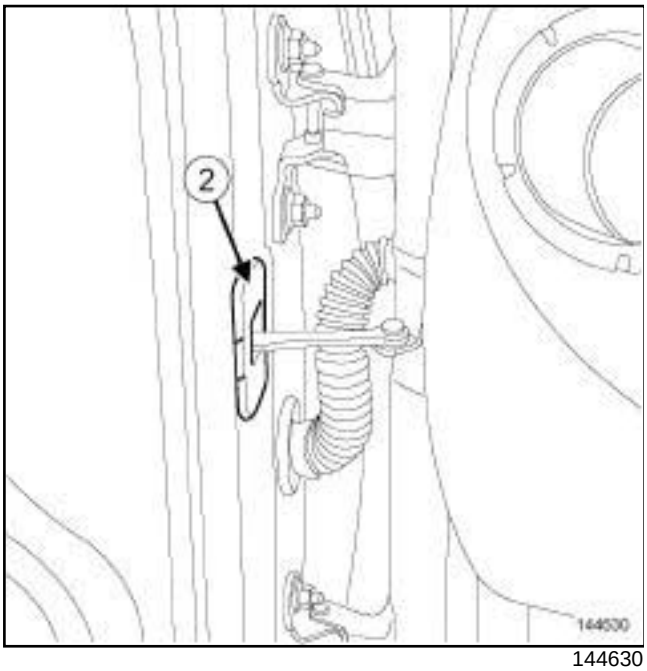

144630

❏ Remove the front side door check strap seal (**2**) .

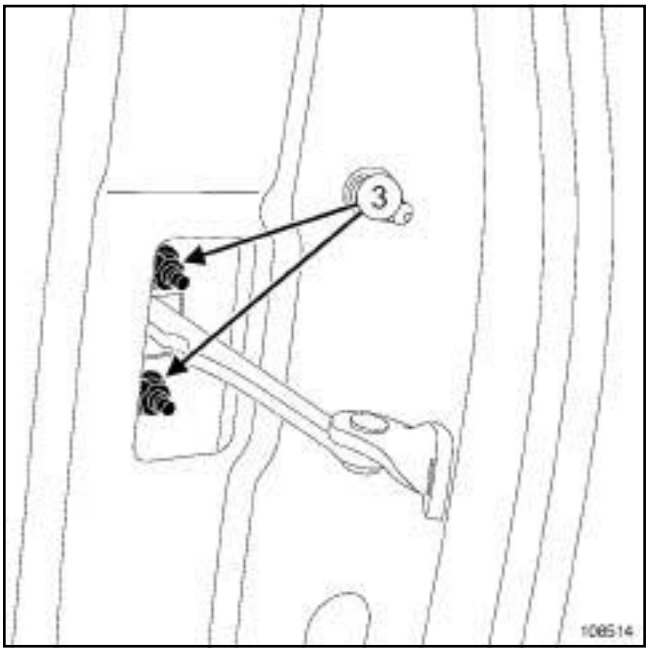

108514

❏ Remove the front side door check strap bolts (**3**) .

❏ Remove the front side door check strap from inside the front side door box section.

REFITTING

❏ Proceed in the reverse order to removal.

Tightening torques ▽	
front side door striker panel	**21 N.m**

REMOVAL

REMOVAL OPERATION

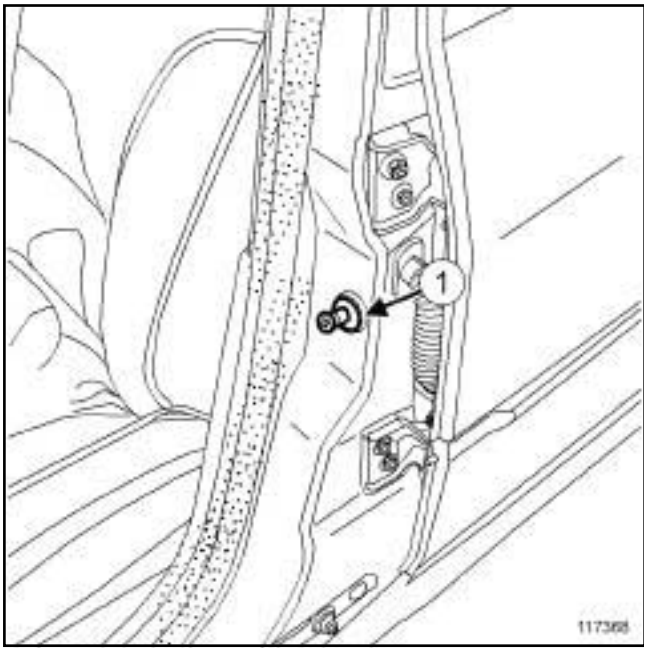

117368

❑ Remove the front side door striker panel (**1**) .

REFITTING

REFITTING OPERATION

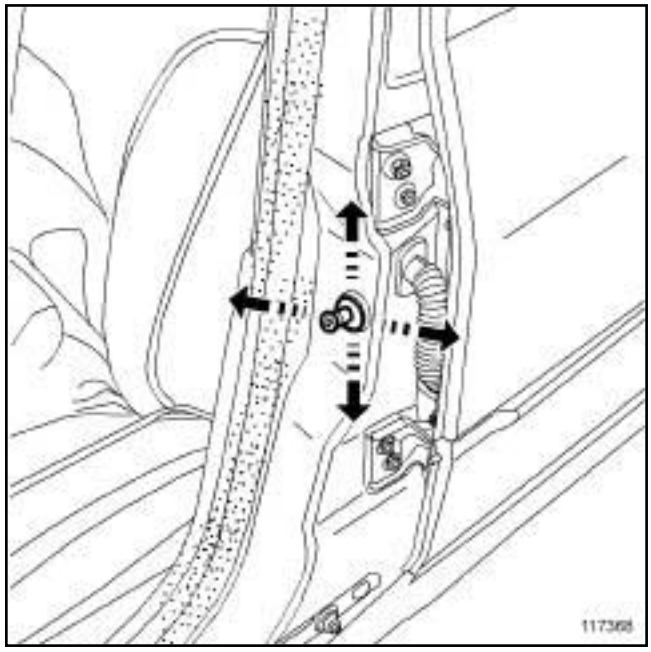

117368

❑ Refit the front side door striker panel.

❑ Adjust the front side door striker panel.

❑ Check whether it is possible to close the door.

❑ Torque tighten the **front side door striker panel (21 N.m)**.

REMOVAL

I - REMOVAL PREPARATION OPERATION

❑ Remove:

- the front side door trim (see **Front side door trim: Removal - Refitting**) (72A, Side opening element trim).
- the support of the front side door run channel (see **51A**, **Side opening element mechanisms**, **Front side door slide mounting: Removal - Refitting**, page **51A-21**) .

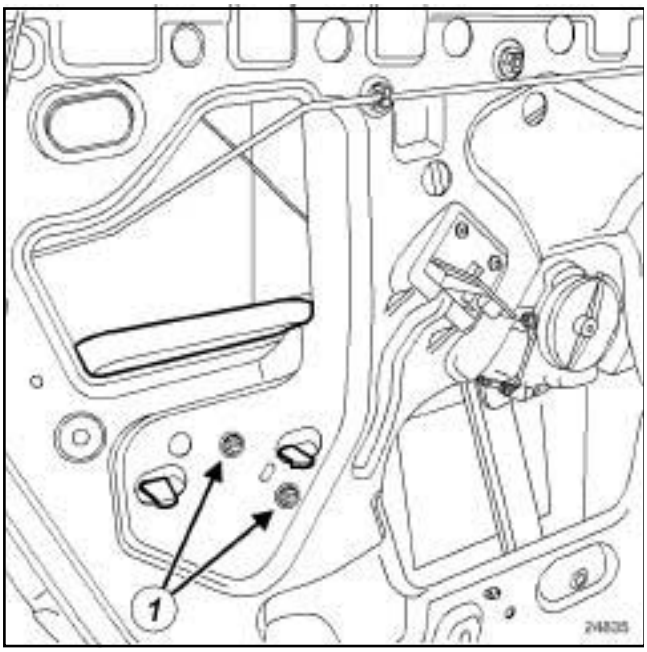

24835

❑ Remove the bolts (**1**) from the impact padding without removing it.

II - REMOVAL OPERATION

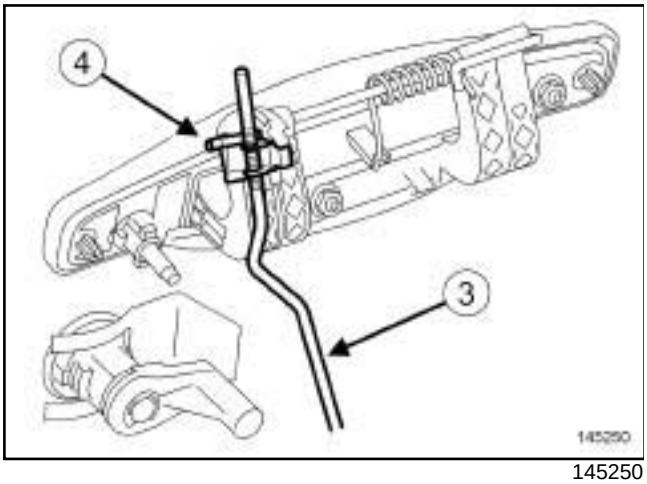

145250

❑ Unclip the exterior opening control linkage (**3**) from the clip (**4**) on the exterior door handle.

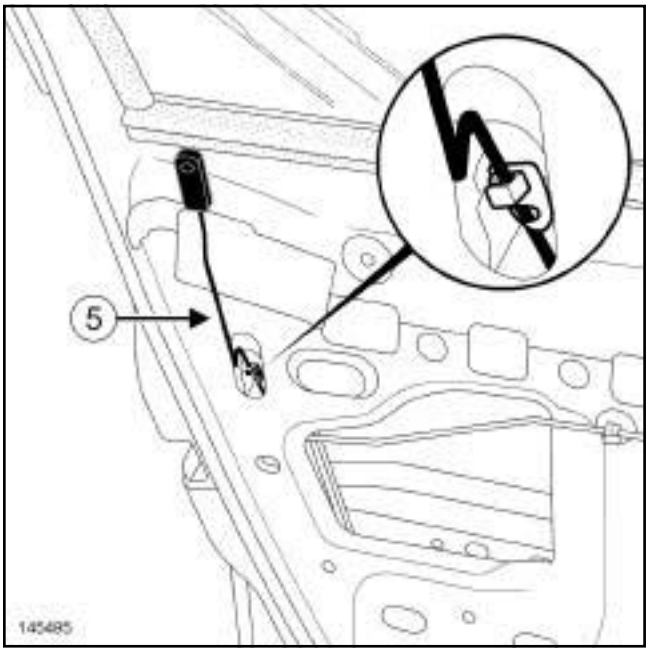

145495

❑ Remove the front side door lock catch (**5**) .

DOOR OPENING SYSTEM 02

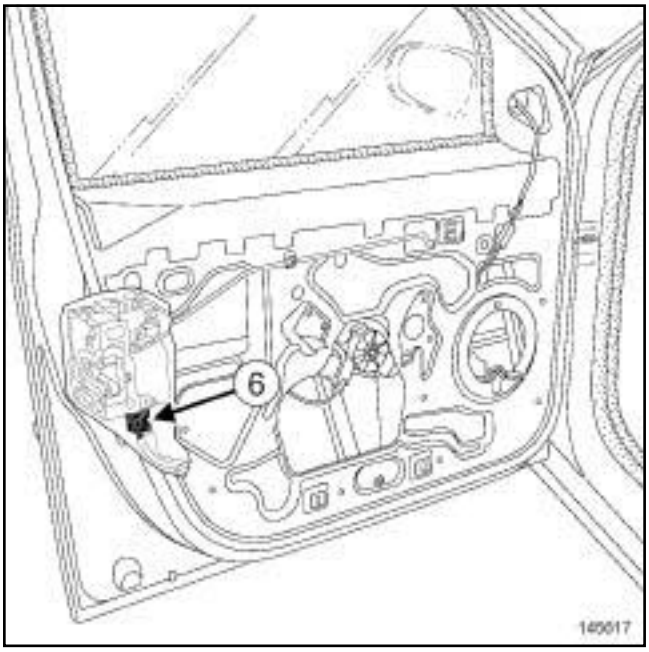

145617

❑ Disconnect the connector (**6**) from the lock motor.

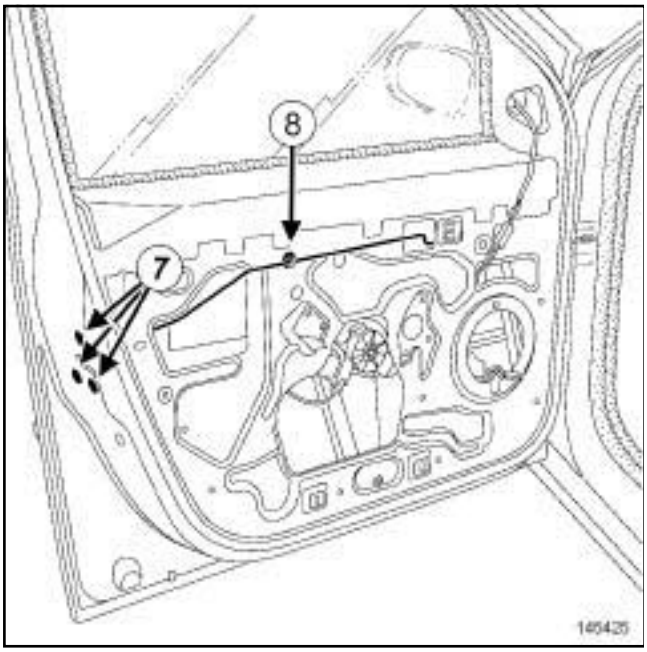

145425

- ❑ Remove the bolts (**7**) from the front side door lock.
- ❑ Unclip the interior opening control linkage at (**8**) .
- ❑ Remove the front side door lock and the interior opening control linkage.

DOOR OPENING SYSTEM 02

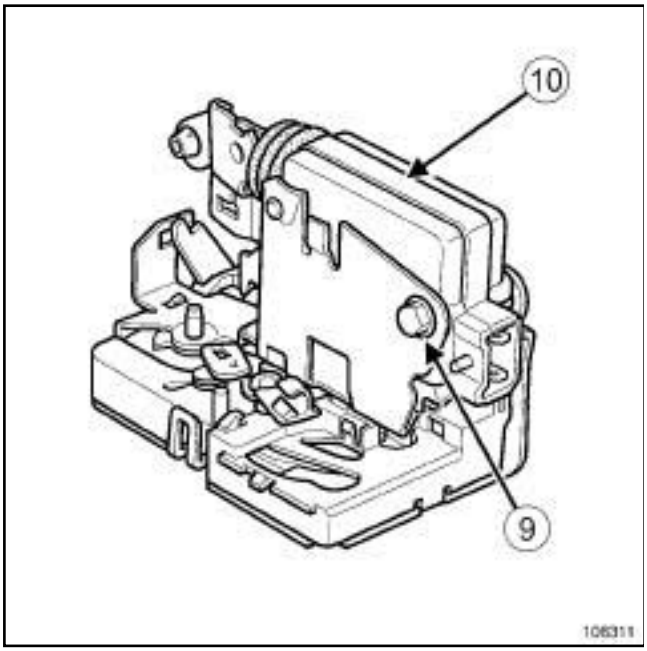

108311

- ❑ Remove:
  - the locking motor bolt (**9**) .
  - the locking motor (**10**) .

REFITTING

- ❑ Proceed in the reverse order to removal.
- ❑ Refit the front side door impact padding (see **Front side door impact padding: Removal - Refitting**) (59A, Safety accessories).
- ❑ Carry out a function test.

REMOVAL

I - REMOVAL PREPARATION OPERATION

❑ Remove the front side door trim (see **Front side door trim: Removal - Refitting**) (72A, Side opening elements trim).

II - REMOVAL OPERATION

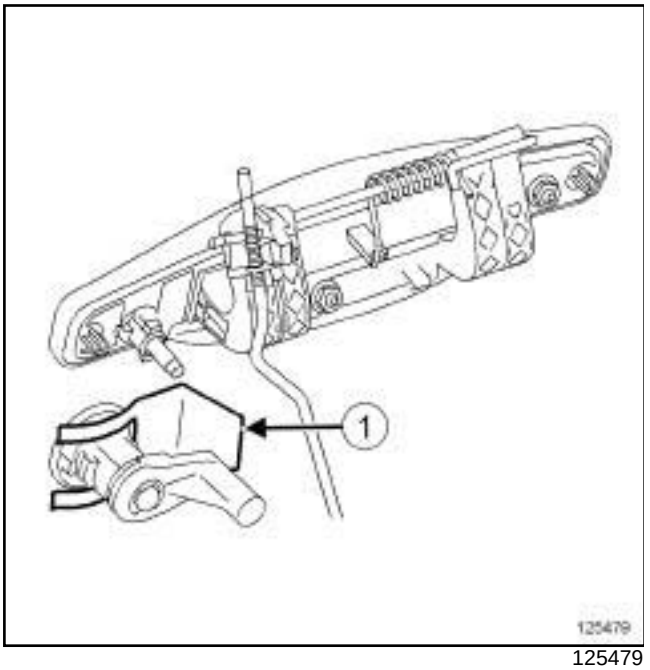

125479

❑ Remove:

- the fork (**1**) ,
- the front side door lock barrel.

REFITTING

❑ Proceed in the reverse order to removal.

❑ Carry out a function test on the front side door lock barrel.

Tightening torques ▽	
the nuts of the exterior door handle	**7 N.m**

REMOVAL

I - REMOVAL PREPARATION OPERATION

❏ Remove the front door trim (see **Front side door trim: Removal - Refitting**) (72A, Side opening elements trim) or the rear side door trim (see **Rear side door trim: Removal - Refitting**) (72A, Side opening elements trim).

II - REMOVAL OPERATION

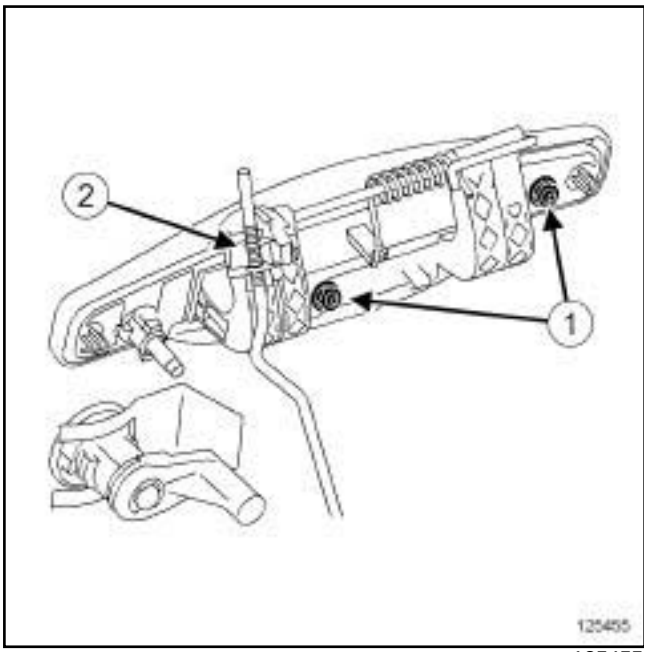

125455

❏ Remove nuts (**1**) .

❏ Unclip the opening control linkage from the clip (**2**) .

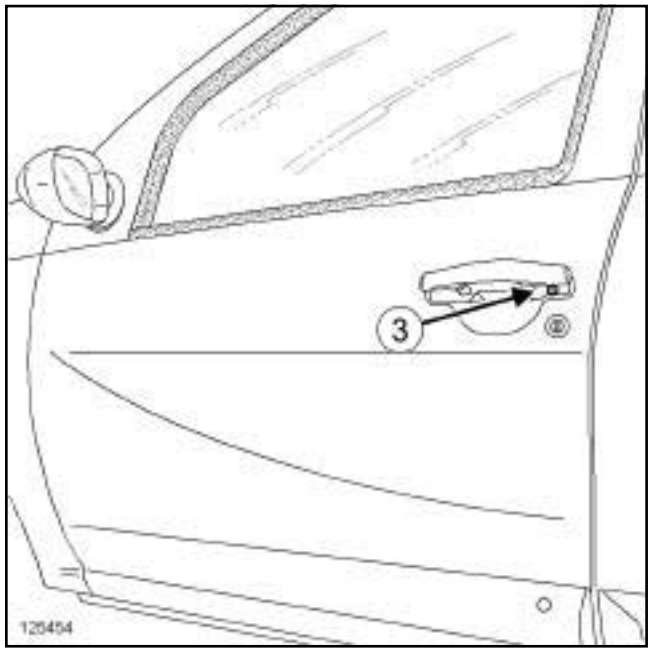

125454

❏ Remove:

- the bolt (**3**) ,
- the door exterior handle.

REFITTING

❏ Proceed in the reverse order to removal.

❏ Torque tighten **the nuts of the exterior door handle (7 N.m)**

❏ Carry out a function test.

REMOVAL

REMOVAL OPERATION

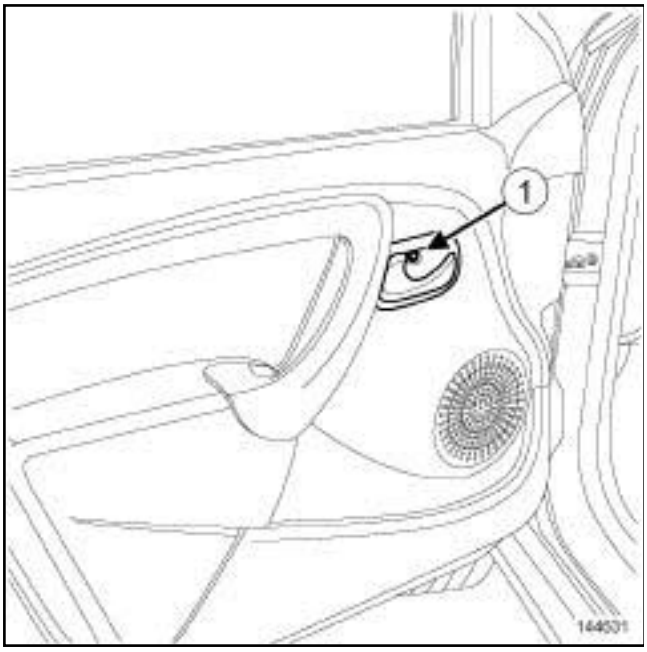

144631

❑ Remove:

- the bolt (**1**) ,
- the front side door interior handle.

REFITTING

❑ Proceed in the reverse order to removal.

REMOVAL

I - REMOVAL PREPARATION OPERATION

❑ Remove the front side door trim (see **Front side door trim: Removal - Refitting**) (72A, Side opening elements trim).

II - REMOVAL OPERATION

❑ Lower the window.

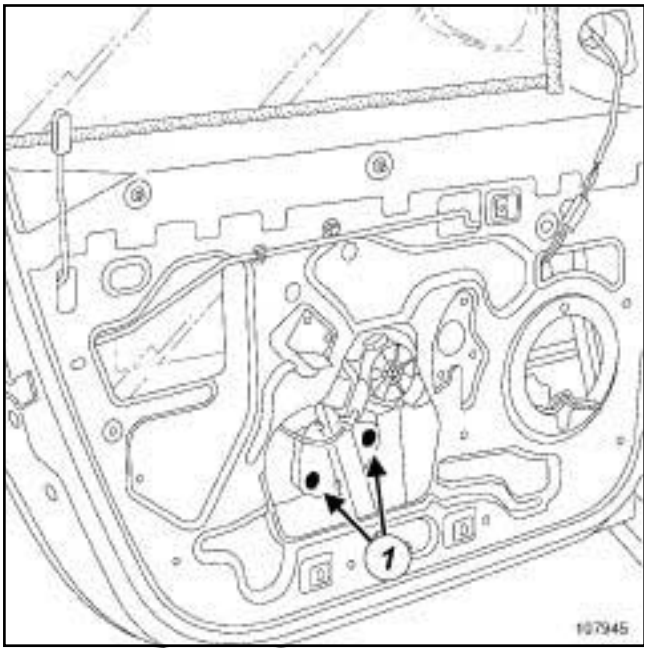

107945

❑ Remove the bolts (**1**)

❑ Raise the window fully.

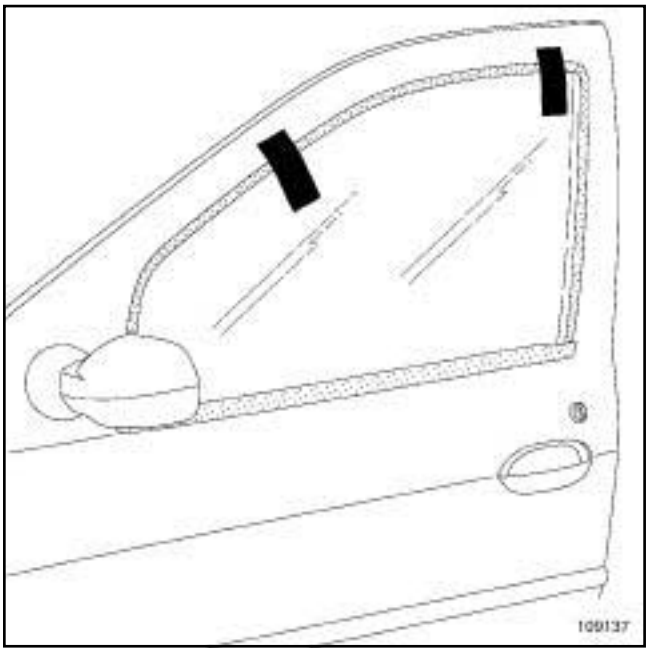

109137

❑ Keep the window in the raised position using adhesive tape.

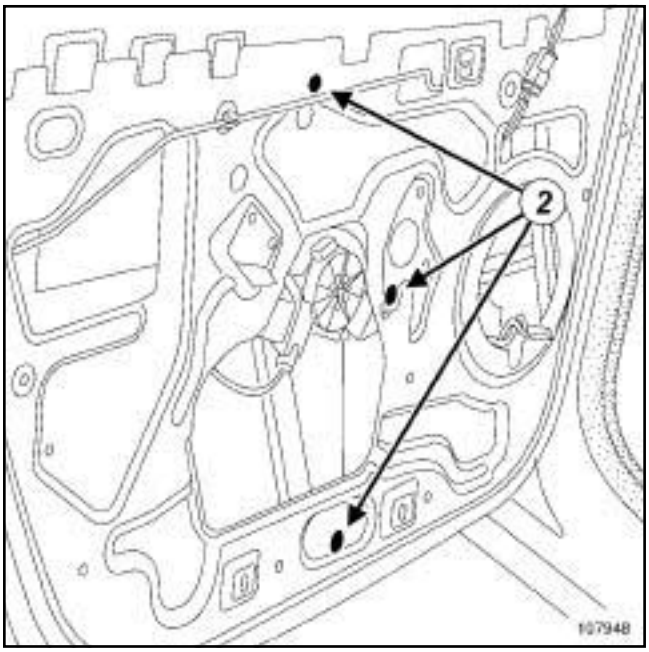

107948

❑ Remove nuts (**2**) .

❑ Disconnect the electric window motor connector.

❑ Remove the window winder mechanism.

REFITTING

I - REFITTING OPERATION

- ❑ Refit the window lift mechanism.
- ❑ Connect the electric window motor connector.
- ❑ Refit the nuts ***(2)*** .
- ❑ Position the sliding window.
- ❑ Refit the bolts ***(1)*** without tightening them.
- ❑ Raise the window.

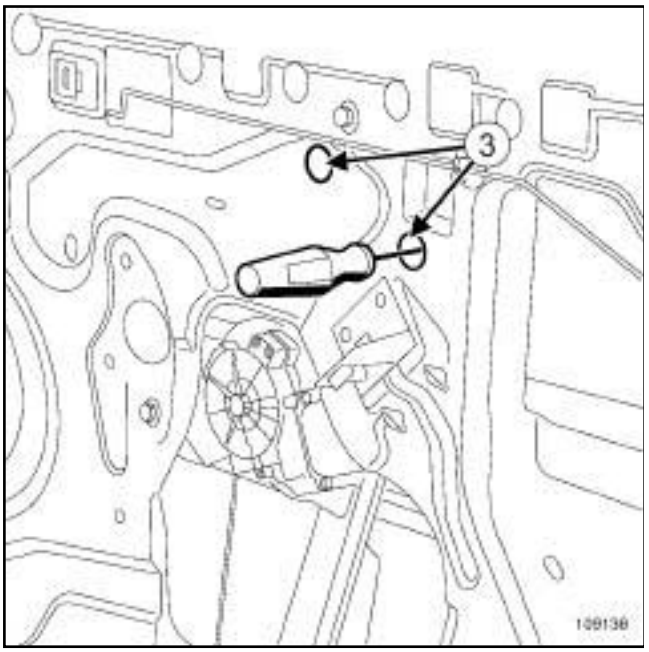

109136

- ❑ Tighten the bolts ***(1)*** through the holes (**3**) .

II - FINAL OPERATION

- ❑ Carry out a function test.
- ❑ Refit the front side door trim (see **Front side door trim: Removal - Refitting**) (72A, Side opening elements trim).

REMOVAL

I - REMOVAL PREPARATION OPERATION

❏ Remove the front side door trim (see **Front side door trim: Removal - Refitting**) (72A, Side opening elements trim).

II - REMOVAL OPERATION

❏ Lower the window.

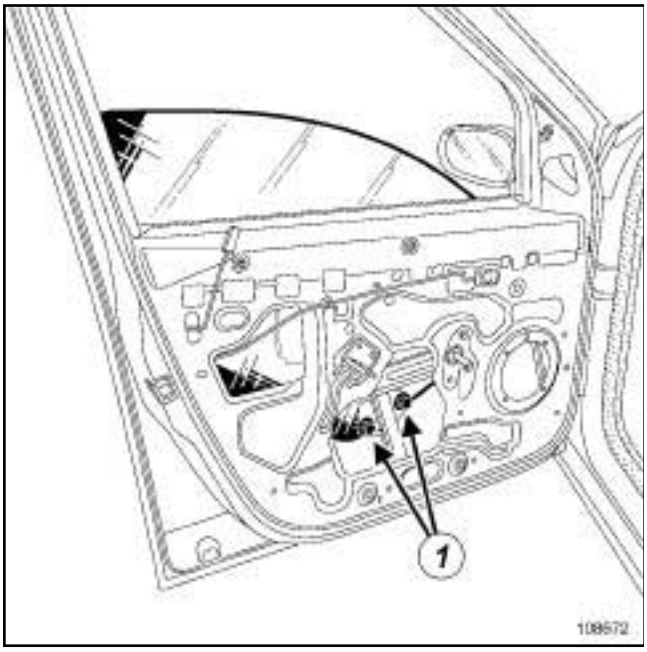

108672

❏ Remove the bolts (**1**) .

❏ Raise the window fully.

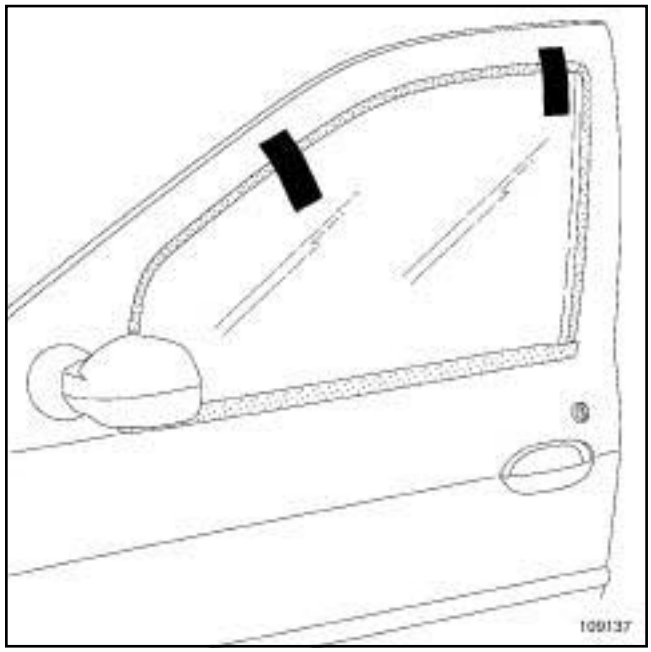

109137

❏ Keep the window in the raised position using adhesive tape.

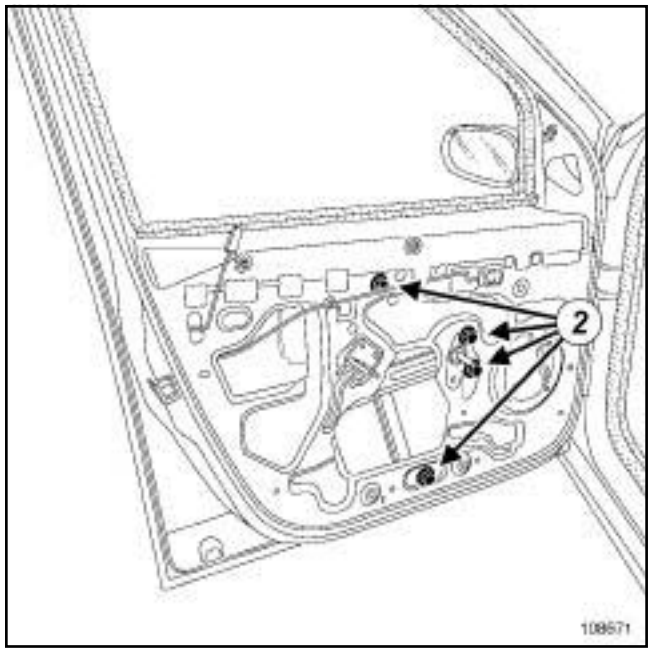

108671

❏ Remove nuts (**2**) .

❏ Remove the window winder mechanism.

REFITTING

I - REFITTING OPERATION

- ❑ Fit the window winder mechanism.
- ❑ Refit the nuts ***(2)*** .
- ❑ Position the sliding window.
- ❑ Refit the bolts ***(1)*** without tightening them.
- ❑ Raise the sliding window.

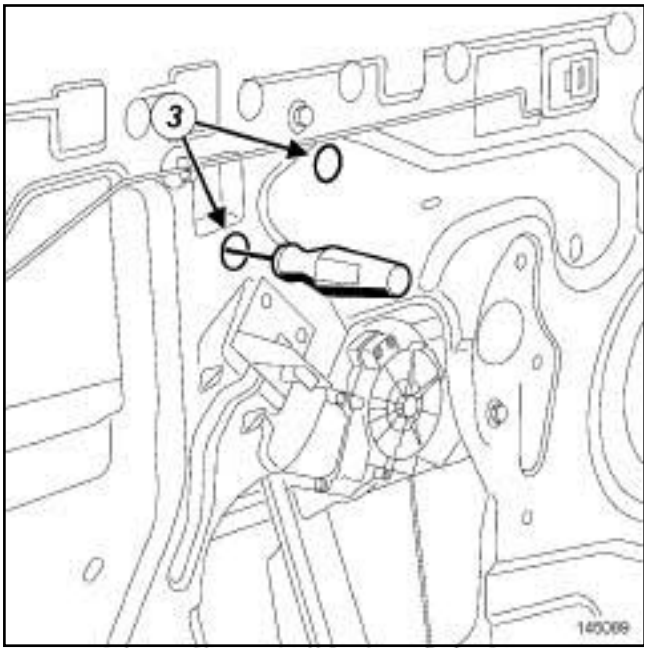

145089

- ❑ Tighten the bolts ***(1)*** through the holes (**3**) .

II - FINAL OPERATION

- ❑ Carry out a function test.
- ❑ Refit the front side door trim (see **Front side door trim: Removal - Refitting**) (72A, Side opening elements trim).

Tightening torques ▽	
rear side door striker panel	**21 N.m**

REMOVAL

REMOVAL OPERATION

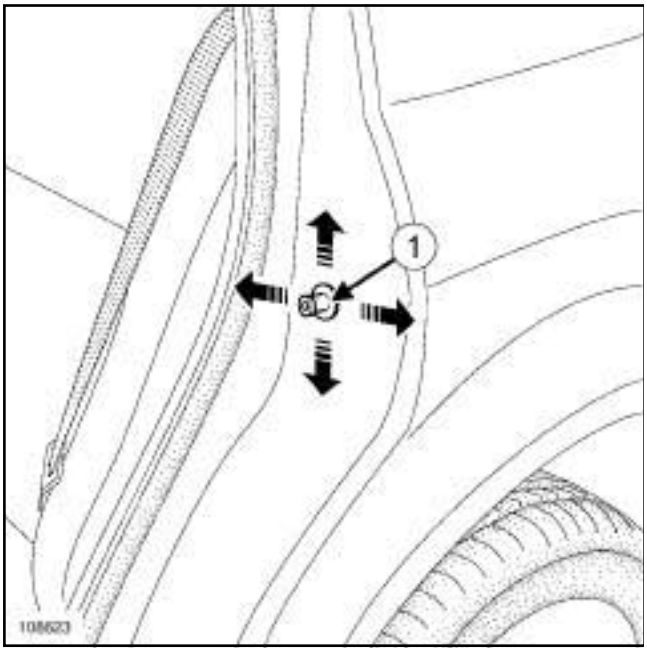

108623

❑ Remove the rear side door striker panel (**1**) .

REFITTING

REFITTING OPERATION

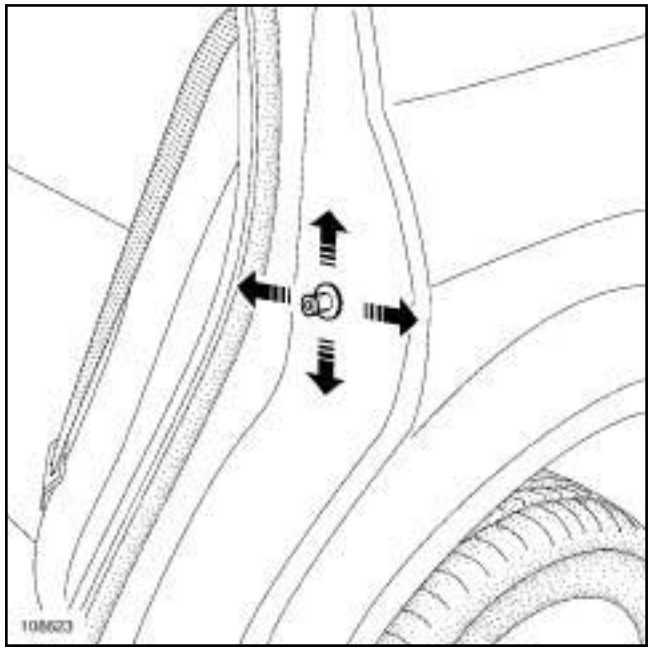

108623

❑ Refit the rear side door striker panel.

❑ Adjust the rear side door striker panel.

❑ Check whether it is possible to close the door.

❑ Torque tighten the **rear side door striker panel (21 N.m)**.

REMOVAL

I - REMOVAL PREPARATION OPERATION

❑ Remove:

- the rear side door trim (see **Rear side door trim: Removal - Refitting**) (72A, Side opening element trim),
- the support of the rear side door run channel (see **51A**, **Side opening element mechanisms**, **Front side door slide mounting: Removal - Refitting**, page **51A-21**) .

II - REMOVAL OPERATION

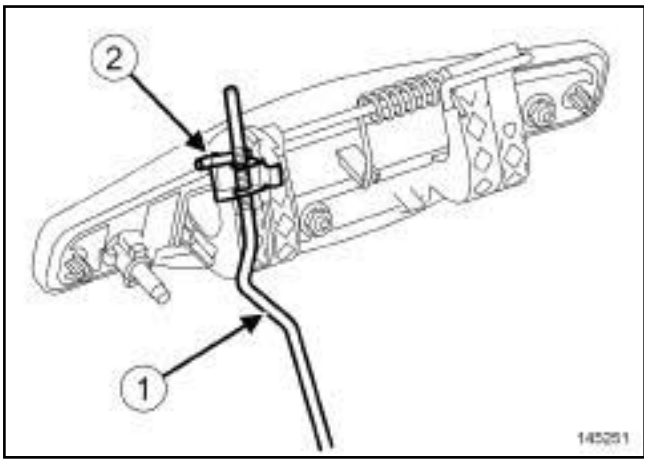

145251

❑ Unclip the exterior opening control linkage (**1**) from the clip (**2**) on the exterior door handle.

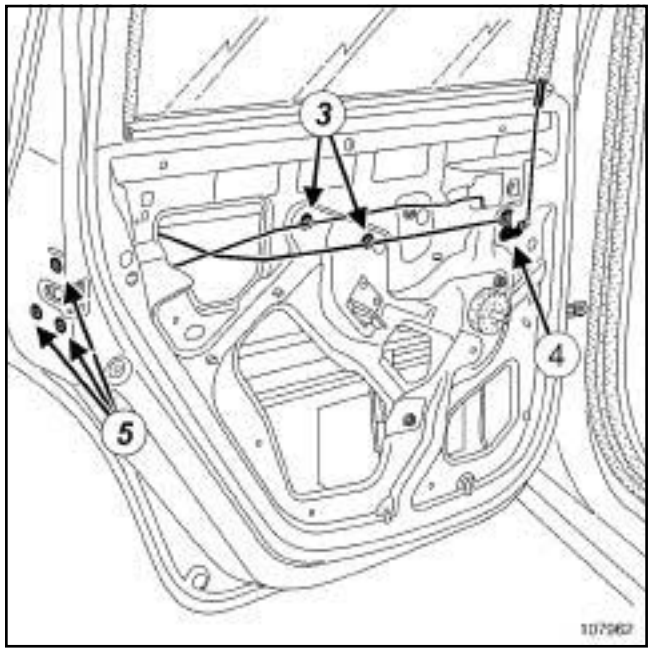

107962

❑ Unclip:

- the control linkages at (**3**) ,
- the control linkage support (**4**) ,

❑ Remove the bolts (**5**) from the rear side door lock.

DOOR OPENING SYSTEM 02

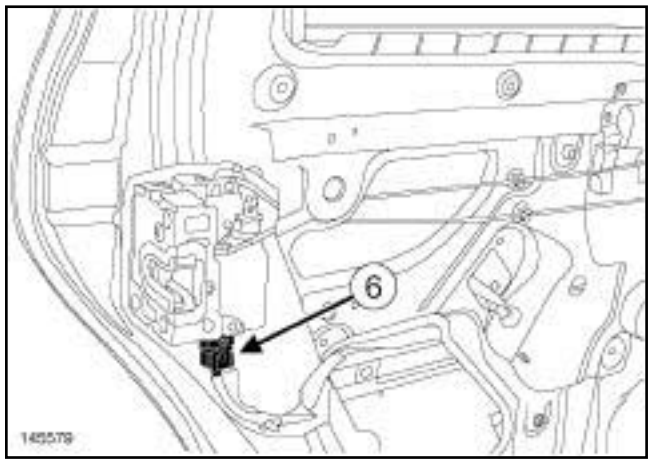

145579

❑ Disconnect the connector (**6**) from the rear side door lock.

❑ Remove the "rear side door lock - control linkages" assembly.

DOOR OPENING SYSTEM 02

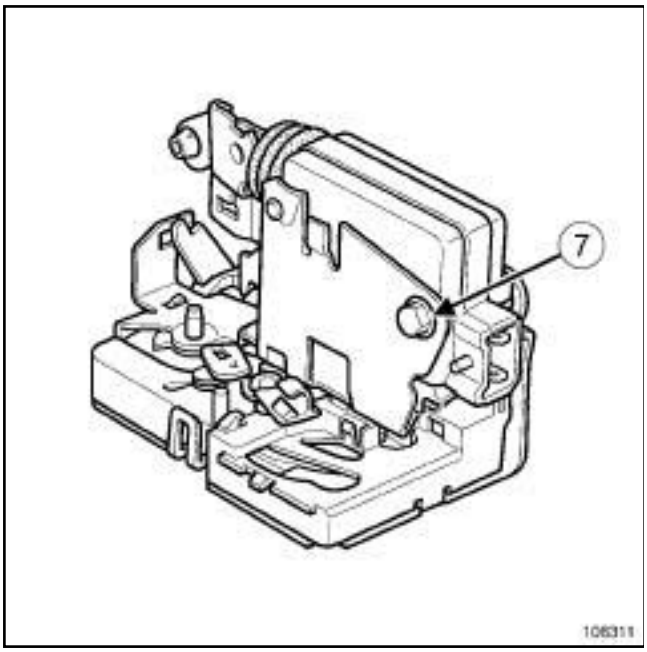

108311

- Remove:
  - the bolt (**7**) ,
  - the lock motor.

REFITTING

- Proceed in the reverse order to removal.
- Carry out a function test.

REMOVAL

REMOVAL OPERATION

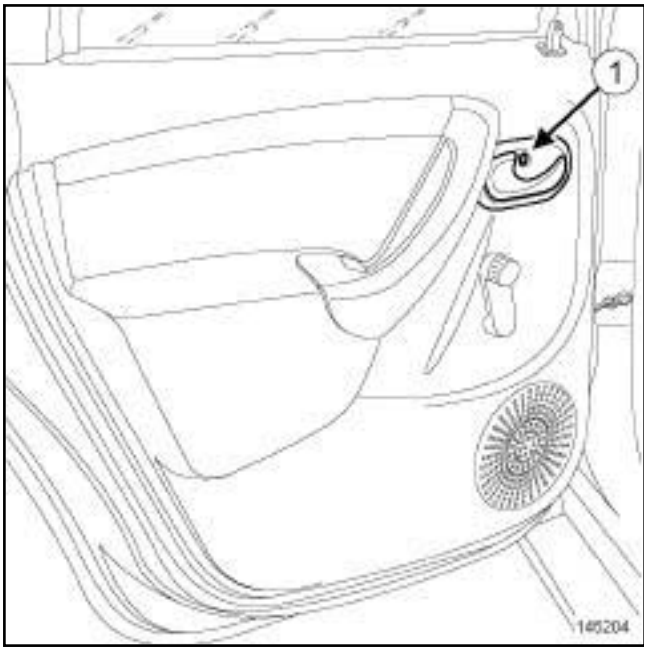

145204

❑ Remove:

- the bolt (**1**) ,
- the rear side door interior handle.

REFITTING

❑ Proceed in the reverse order to removal.

MANUAL REAR WINDOW

REMOVAL

I - REMOVAL PREPARATION OPERATION

❑ Remove the rear side door trim (see **Rear side door trim: Removal - Refitting**) (72A, Side opening element trim).

II - REMOVAL OPERATION

❑ Lower the window.

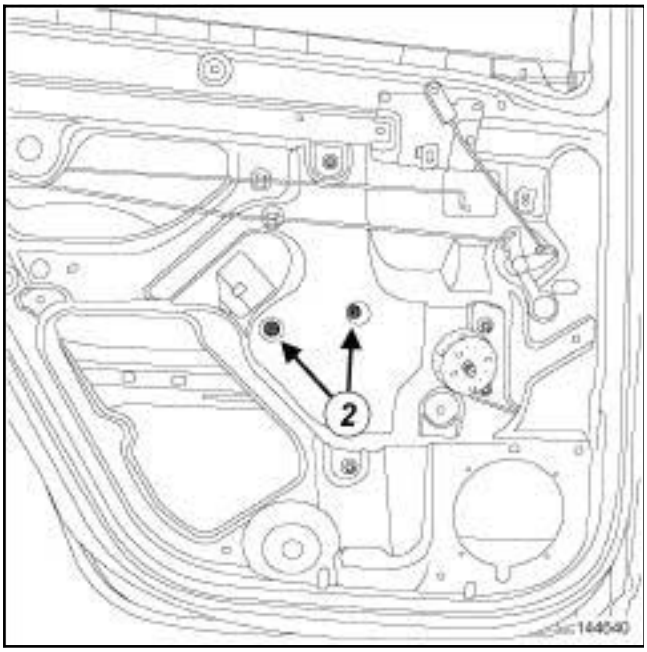

144640

❑ Remove the bolts (**2**) .

❑ Raise the window fully.

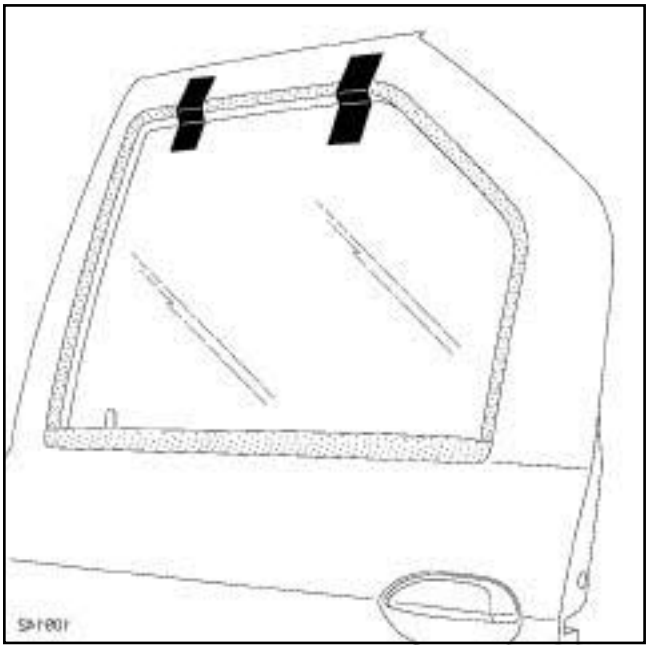

109142

❑ Keep the window in the raised position using adhesive tape.

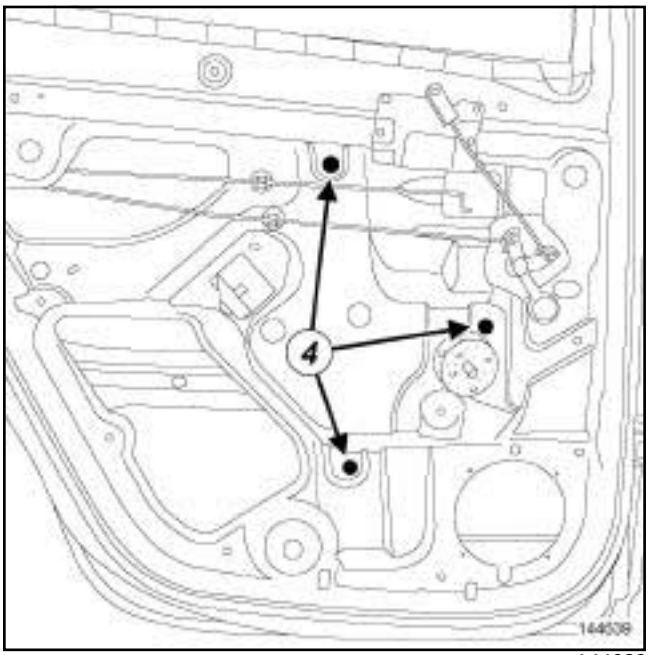

144639

❑ Remove nuts (**4**) .

❑ Remove the rear side door manual window mechanism.

MANUAL REAR WINDOW

REFITTING

I - REFITTING OPERATION

- ❑ Fit the rear side door manual window mechanism.
- ❑ Refit the nuts of the rear side door manual window mechanism.
- ❑ Position the rear side door sliding window.

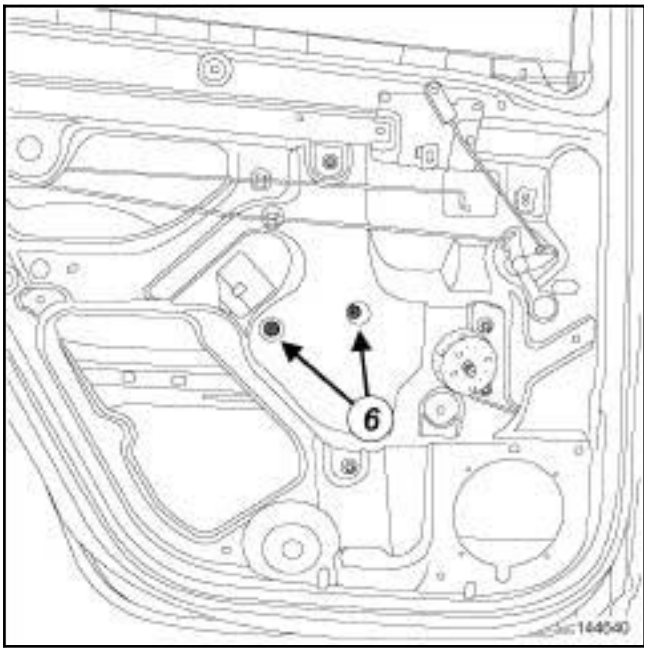

144640

- ❑ Refit the sliding window bolts through the holes (**6**) .

II - FINAL OPERATION

- ❑ Carry out a function test.
- ❑ Refit the rear side door trim (see **Rear side door trim: Removal - Refitting**) (72A, Side opening element trim).

REFITTING

I - REMOVAL PREPARATION OPERATION

❑ Remove the rear side door trim (see **Rear side door trim: Removal - Refitting**) (72A, Side opening element trim).

II - REMOVAL OPERATION

❑ Partially remove the glass run channel from its mounting.

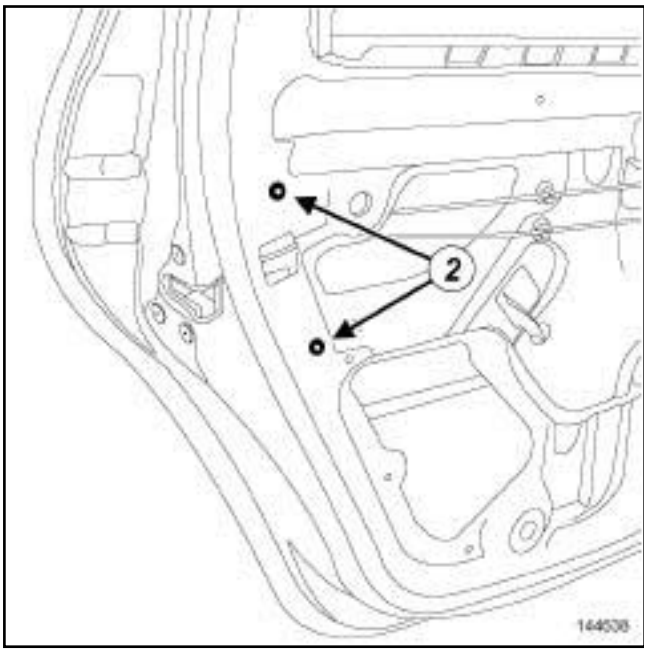

144638

❑ Remove the bolts (**2**) .

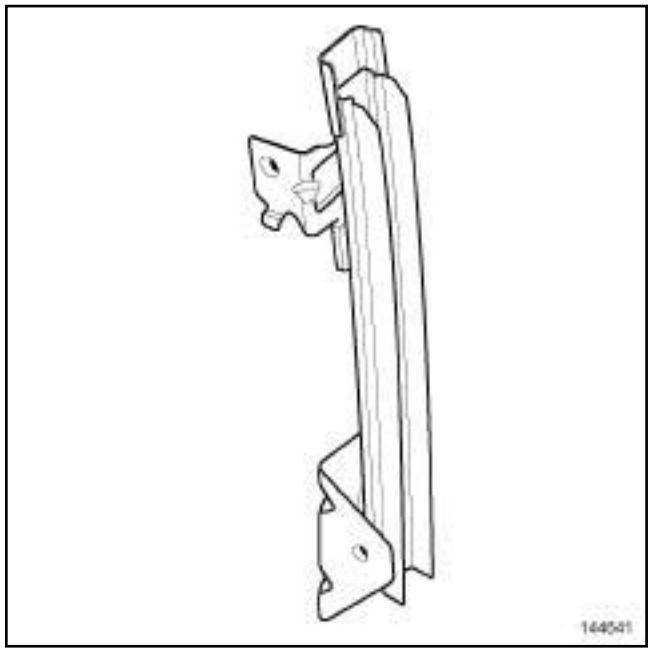

144641

❑ Remove the mounting of the rear side door run channel.

REFITTING

❑ Proceed in the reverse order to removal.

REMOVAL

I - REMOVAL PREPARATION OPERATION

❑ Remove the front side door trim (see **Front side door trim: Removal - Refitting**) (72A, Side opening elements trim).

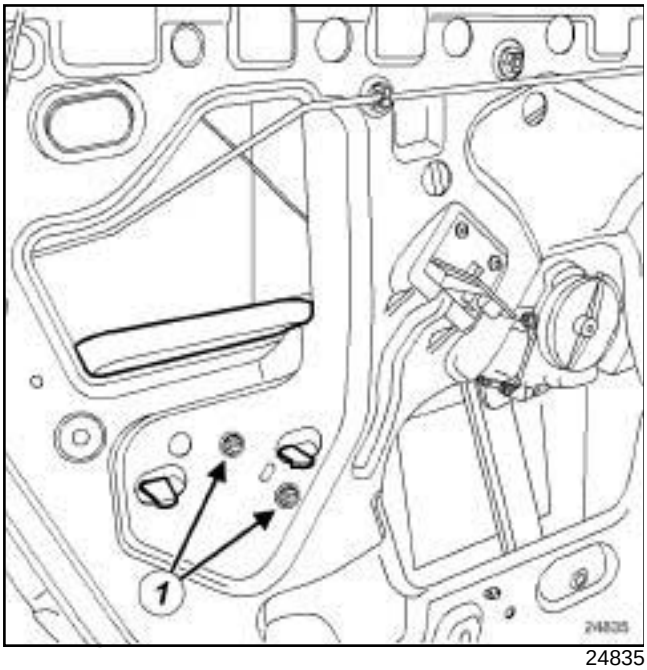

24835

❑ Remove the bolts (**1**) from the impact padding without extracting it.

II - REMOVAL OPERATION

❑ Partially remove the glass run channel from its mounting.

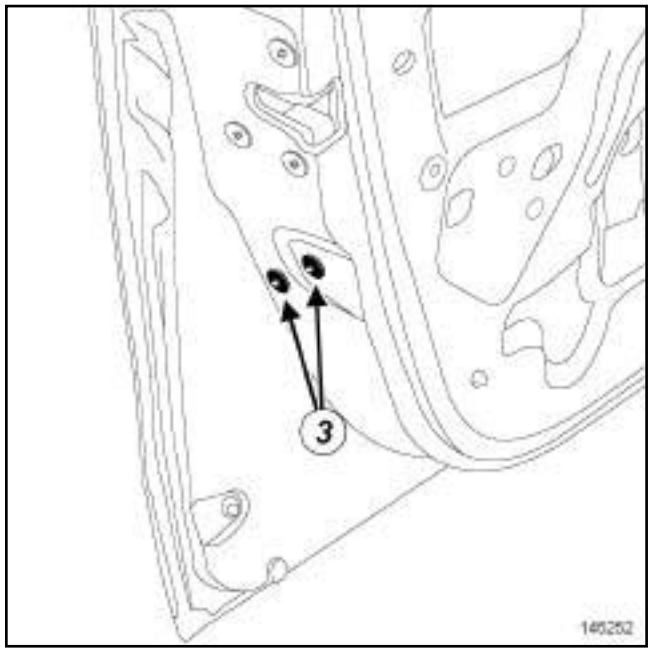

145252

❑ Remove the bolts (**3**) .

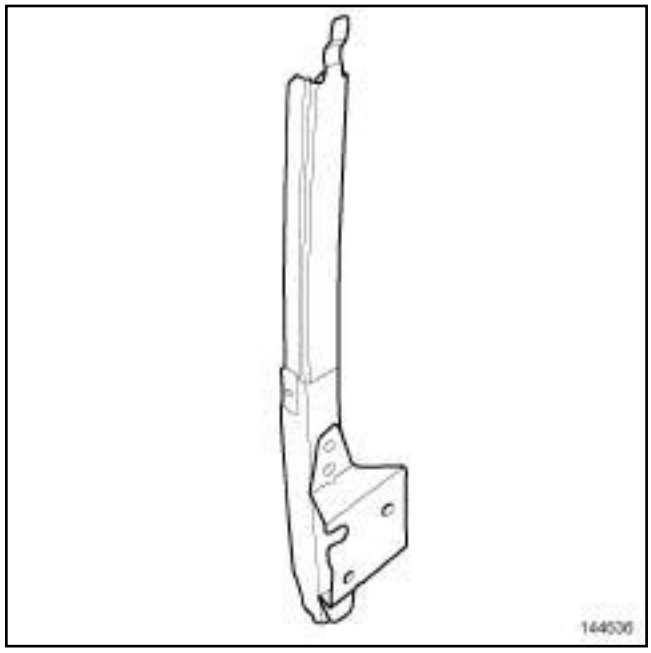

144636

❑ Remove the support of the front side door run channel.

REFITTING

REFITTING OPERATION

❑ Refit the front side door impact padding (see **Front side door impact padding: Removal - Refitting**) (59A, Safety accessories).

FINAL OPERATION

❑ Proceed in the reverse order to removal.

REMOVAL

I - REMOVAL PREPARATION OPERATION

❑ Remove the rear side door trim (see **Rear side door trim: Removal - Refitting**) (72A, Side opening element trim).

II - REMOVAL OPERATION

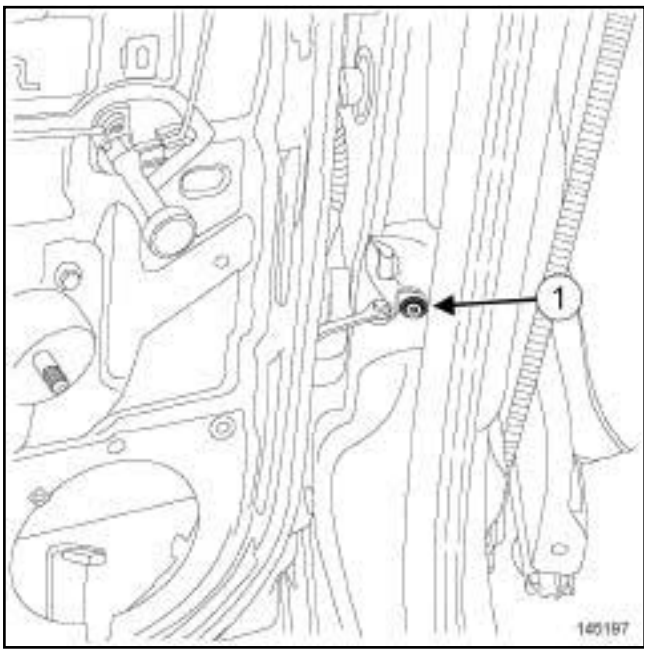

145197

❑ Remove the bolt (**1**) from the rear side door check strap.

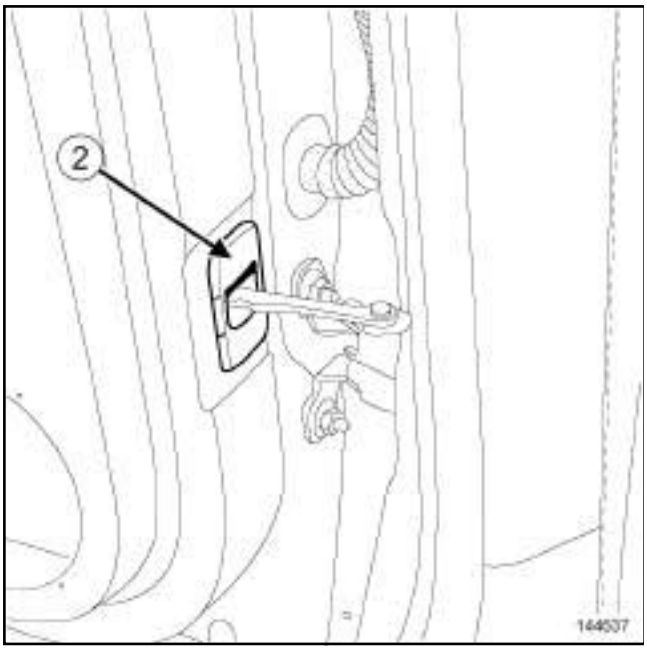

144637

❑ Remove the rear side door check strap seal (**2**) .

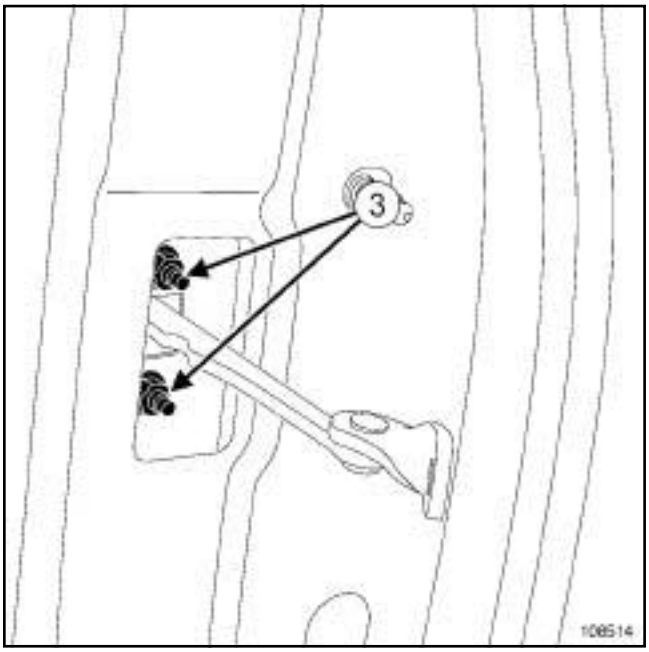

108514

❑ Remove the bolts (**3**) .

❑ Remove the rear side door check strap from inside the rear side door box section.

REFITTING

❑ Proceed in the reverse order to removal.

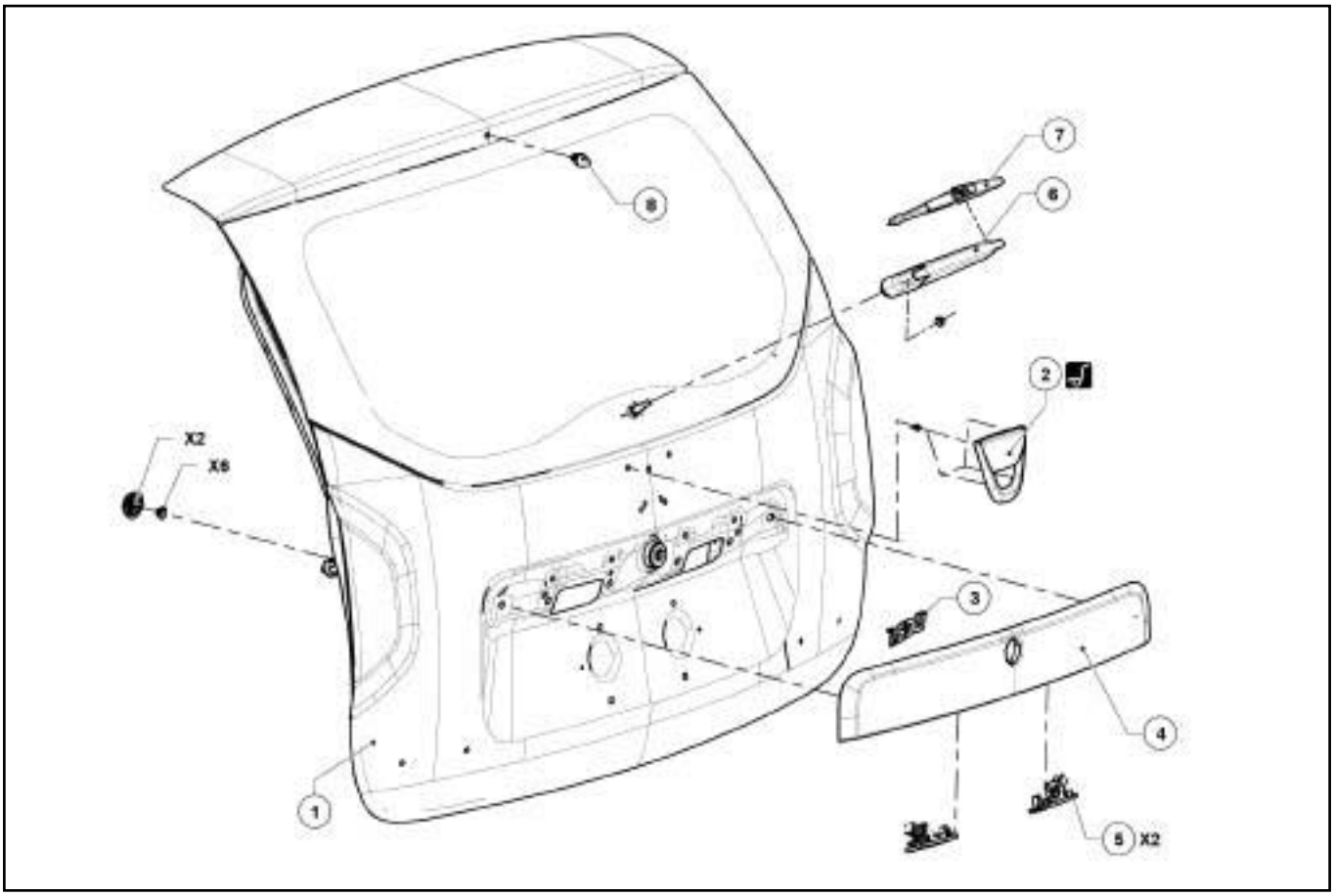

146094

(see **Illustration key: Description**) (01D, Mechanical introduction).

Mark	Description	Information
1	Bonnet	Material: Steel (see **Bonnet: Removal - Refitting**) (48A, Non-side opening elements). (see **Steel bodywork component: Preparation and paint range**) (Technical Note 0592A, Paint application range for panels).
2	Front bumper	Material: P/E (see **55A**, **Exterior protection**, **Front bumper: Removal - Refitting**, page **55A-8**) (see **55A**, **Exterior protection**, **Front bumper assembly: Exploded view**, page **55A-1**) (see **Polypropylene bodywork component: Preparation and paint range**) (Technical Note 0592A, Paint application range for plastic). (see **Plastic material bodywork component: Repair**) (50A, General information).
3	Bonnet hinge	
4	Front wing	Material: Steel (see **Front wing: Removal - Refitting**) (42A, Upper front structure). (see **Steel bodywork component: Preparation and paint range**) (Technical Note 0592A, Paint application range for panels).
5	Side pressure piece of front bumper	
6	Rivet of side pressure piece of front bumper	
7	Front section of sill panel extender	(see **56A**, **Exterior equipment**, **Exterior body side trim assembly: Exploded view**, page **56A-1**)
8	Front wheel arch liner	Material: P/E
9	Fog light	(see **Front fog light bulb: Removal - Refitting**) (80B Headlights).

Mark	Description	Information
10	Side indicator	(see **Side indicator: Removal - Refitting**) (80B Headlights).
11	Headlight	(see **Headlight assembly: Exploded view**) (80B Headlights).

REMOVAL

REMOVAL OPERATION

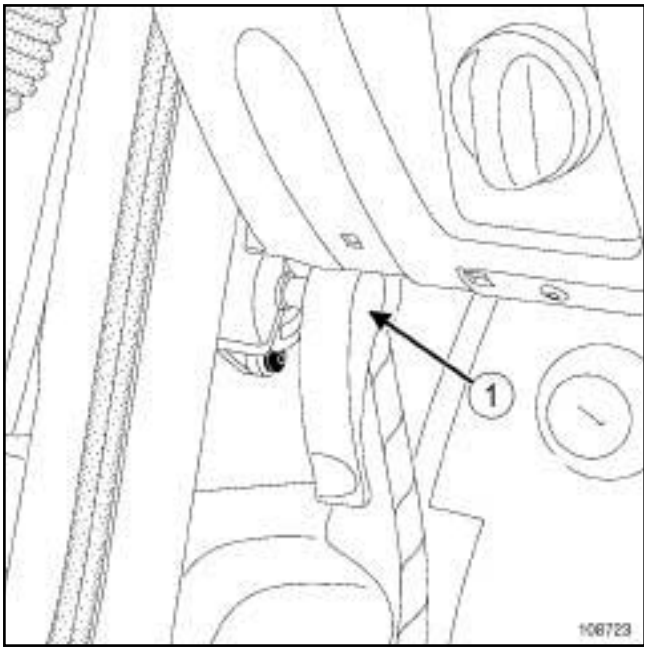

108723

❑ Remove the bonnet release control (**1**) .

REFITTING

❑ Proceed in the reverse order to removal.

Tightening torques ▽	
bonnet catch nuts	**21 N.m**

REMOVAL

I - REMOVAL PREPARATION OPERATION

❑ Remove:

- the front bumper (see **55A**, **Exterior protection**, **Front bumper: Removal - Refitting**, page **55A-8**) ,
- the air deflector.

II - REMOVAL OPERATION

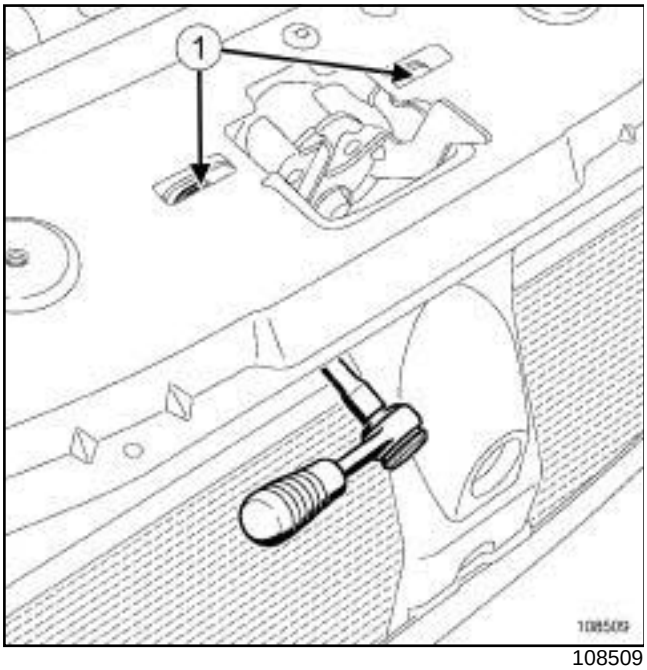

108509

❑ Remove nuts (**1**) .

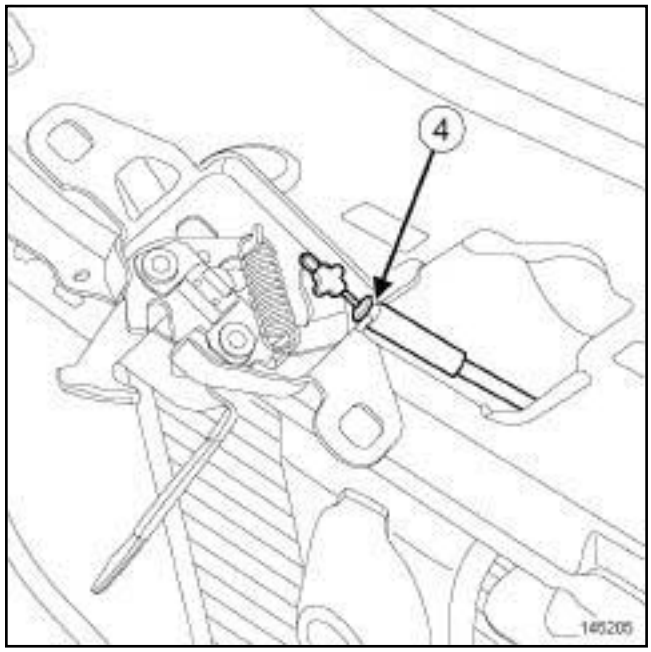

145205

❑ Remove the bonnet catch.

❑ Remove the opening release cable (**4**) .

REFITTING

❑ Proceed in the reverse order to removal.

❑ Torque tighten the **bonnet catch nuts (21 N.m)**.

❑ Carry out a function test.

REMOVAL

I - REMOVAL PREPARATION OPERATION

❑ Remove:

- the front bumper (see **55A**, **Exterior protection**, **Front bumper: Removal - Refitting**, page **55A-8**) ,
- the bonnet catch (see **52A**, **Non-side opening element mechanisms**, **Bonnet lock: Removal - Refitting**, page **52A-5**) ,
- the bonnet release catch (see **52A**, **Non-side opening element mechanisms**, **Bonnet release control: Removal - Refitting**, page **52A-4**) .

II - REMOVAL OPERATION

❑ Note the route of the bonnet release cable.

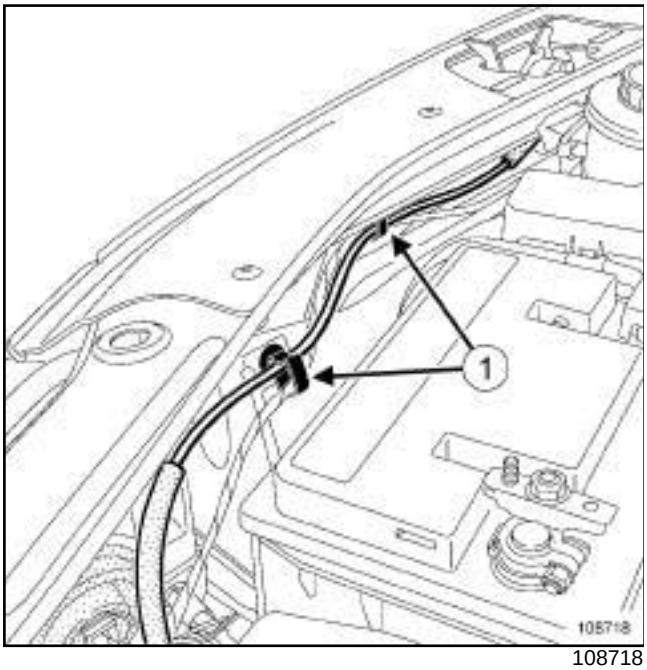

108718

❑ Unclip the bonnet opening cable at (**1**) .

❑ Remove the remote headlight beam adjustment control cables (see **Remote headlight beam adjustment control: Removal - Refitting**) (84A, Control - Signals).

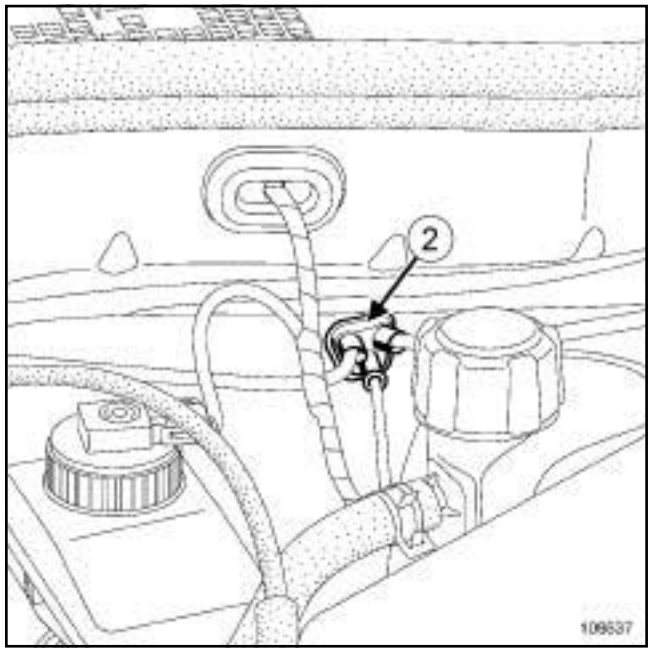

108637

❑ Remove the blanking piece cable (**2**) .

❑ Remove the bonnet release cable from inside the vehicle.

REFITTING

❑ Proceed in the reverse order to removal.

❑ Carry out a function test.

REMOVAL

REMOVAL OPERATION

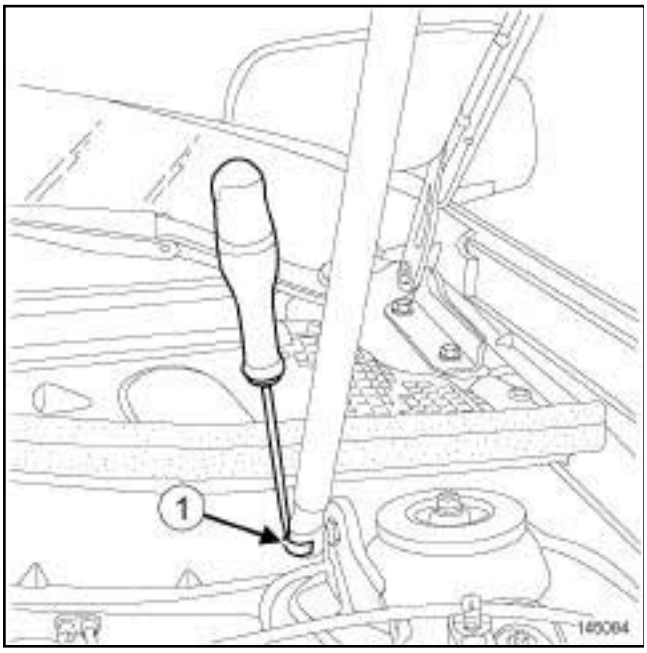

145084

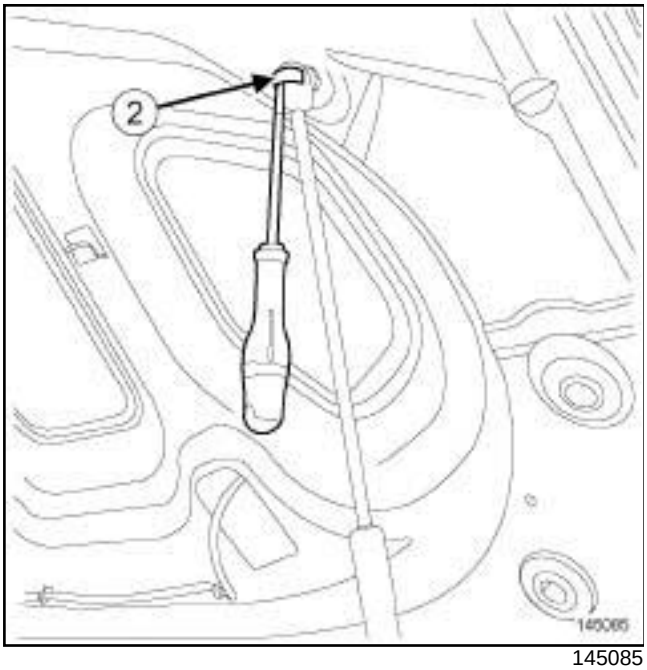

145085

❑

> **WARNING**
> The strut is fitted in such a way as to prevent leaks. Note the strut's direction of fitting (position of the body and cylinder rod) before removing it, in order to refit the strut identically.

❑ Unclip the clips (**1**) and (**2**) without removing them.

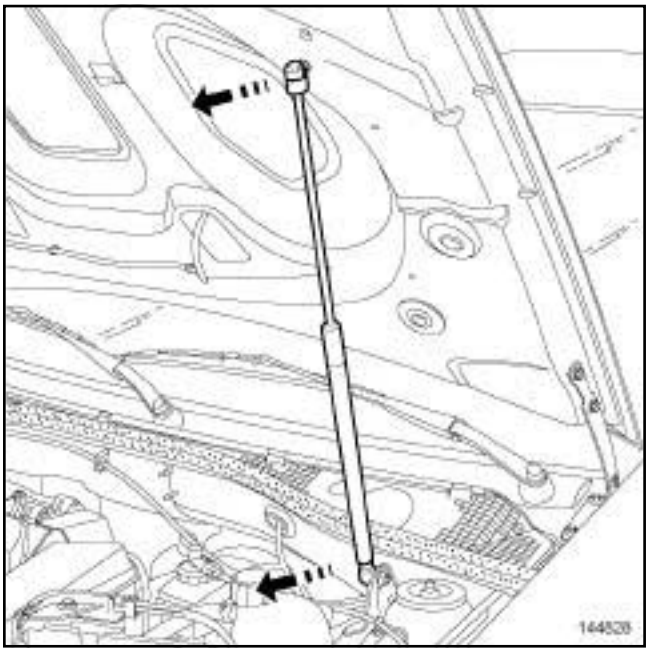

144828

❑ Remove the bonnet strut while holding the bonnet.

REFITTING

❑ Position the clips on the bonnet strut.

❑ Proceed in the reverse order to removal

Tightening torques ▽	
tailgate lock bolts	**8 N.m**

REMOVAL

I - REMOVAL PREPARATION OPERATION

❑ Remove the tailgate trim (see **Tailgate trim: Removal - Refitting**) (73A, Tailgate trim).

II - REMOVAL OPERATION

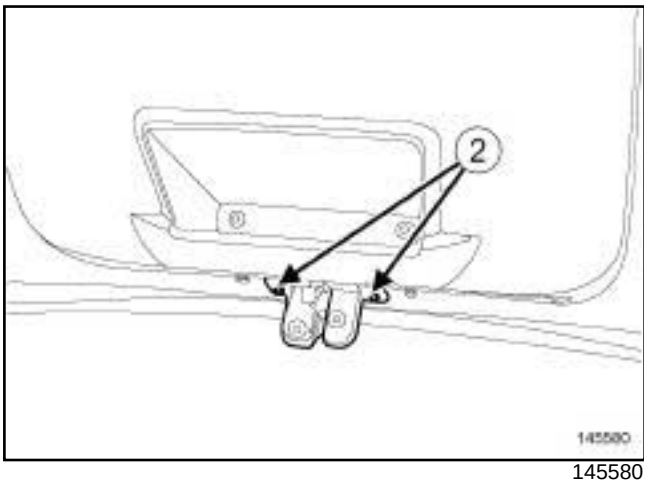

145580

❑ Remove:

- the bolts (**2**) ,
- the tailgate lock.

❑ Remove the tailgate lock control linkage.

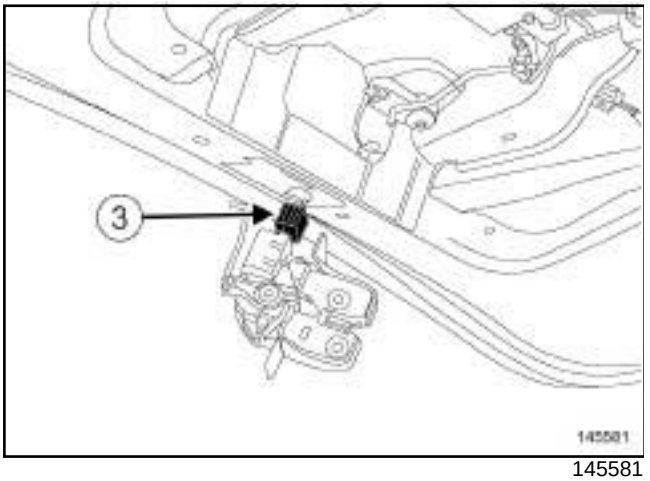

145581

❑ Disconnect the tailgate lock connector (**3**) .

REFITTING

❑ Proceed in the reverse order to removal.

❑ Torque tighten the **tailgate lock bolts (8 N.m)**.

❑ Carry out a function test.

REMOVAL

I - REMOVAL PREPARATION OPERATION

❏ Note the direction in which the tailgate gas strut is fitted before removal.

II - REMOVAL OPERATION

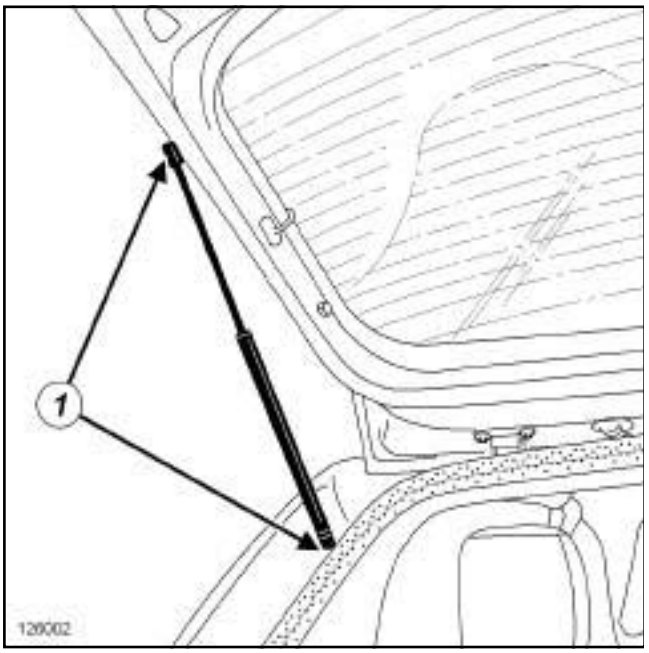

126002

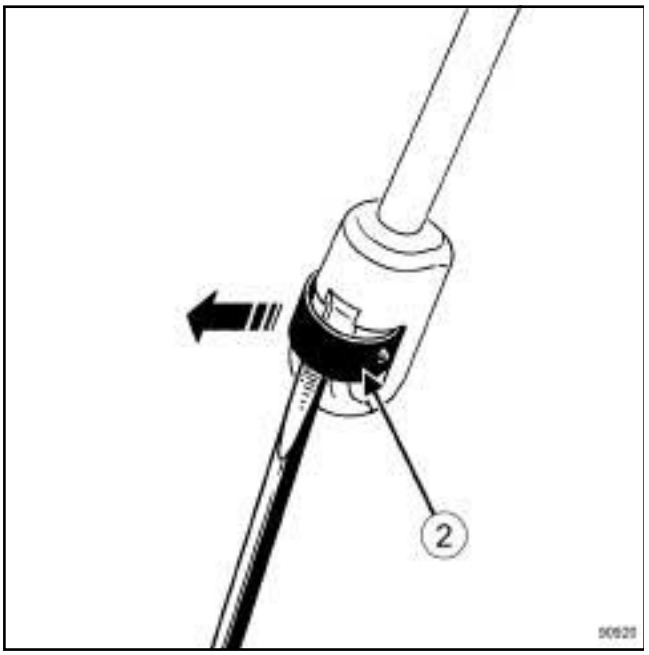

90920

❏ At (**1**) , unclip the clips (**2**) using a flat-blade screwdriver without removing them.

❏ Remove the tailgate strut while holding the tailgate.

REFITTING

❏ Position the clips on the tailgate strut.

❏ Proceed in the reverse order to removal.

Tightening torques ▽	
the bolts of the tailgate control	**8 N.m**

REMOVAL

I - REMOVAL PREPARATION OPERATION

❑ Remove the tailgate trim (see **Tailgate trim: Removal - Refitting**) (73A, Non-side opening elements trim).

II - REMOVAL OPERATION

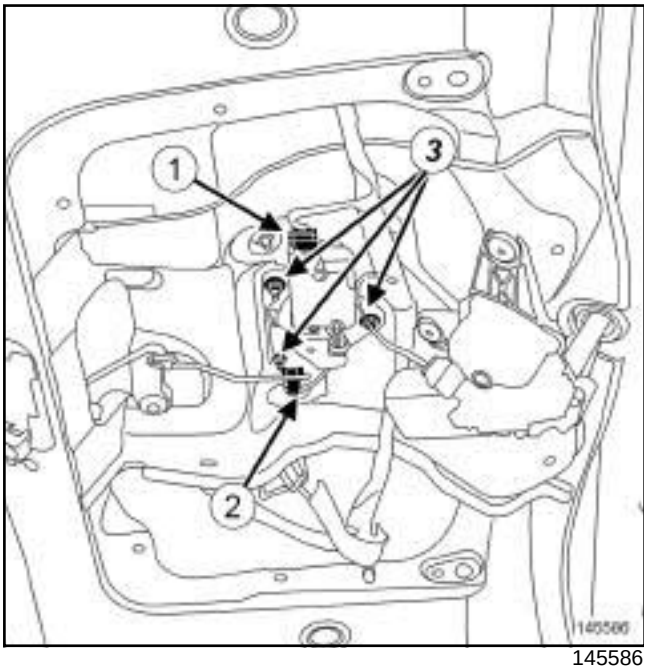

145586

❑ Disconnect the connector (**1**) of the tailgate exterior opening control.

❑ Unclip the linkage of the tailgate exterior opening control at (**2**) using a screwdriver.

❑ Remove the bolts of the tailgate exterior opening control (**3**) .

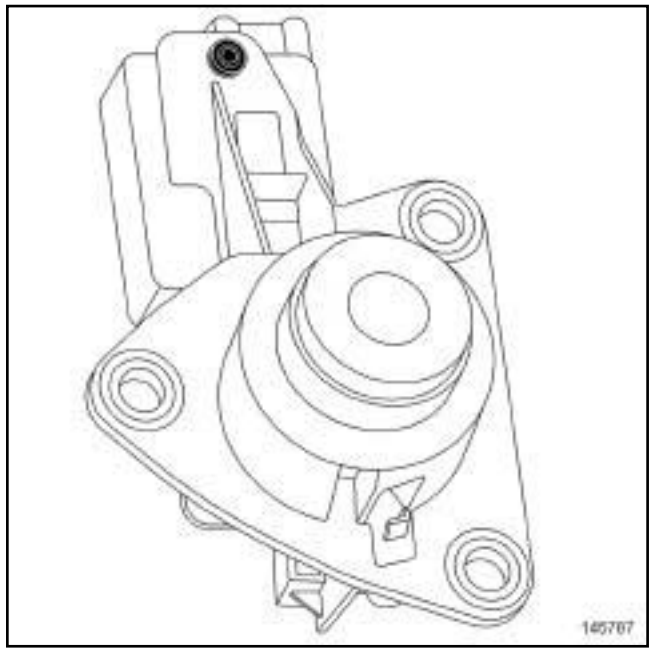

145787

❑ Remove the tailgate exterior opening control.

REFITTING

REFITTING OPERATION

❑ Refit the tailgate exterior opening control.

❑ Torque tighten **the bolts of the tailgate control (8 N.m)**.

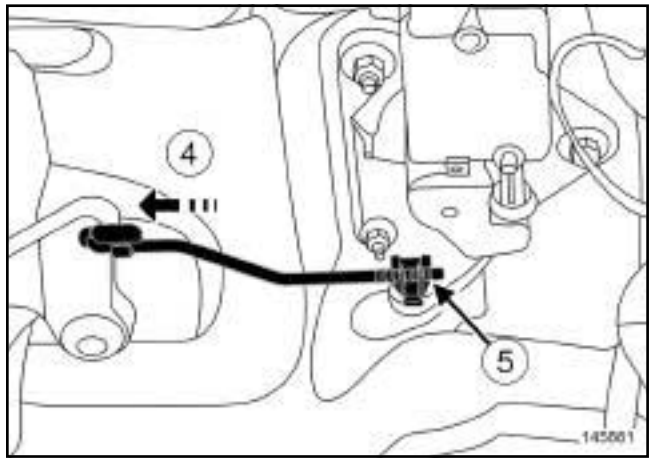

145881

❑ Pull the tailgate opening control linkage at (**4**) and clip on the linkage at (**5**) .

❑ Connect the tailgate opening control connector.

❑ Carry out a function test.

FINAL OPERATION

❑ Proceed in the reverse order to removal.

REMOVAL

I - REMOVAL PREPARATION OPERATION

❑ Remove:

- the interior rear-view mirror (see **57A**, **Interior equipment**, **Interior rear-view mirror: Removal - Refitting**, page **57A-12**) (57A, Interior equipment),
- the windscreen pillar trims (see **Windscreen pillar trim: Removal - Refitting**) (71A, Body internal trim).

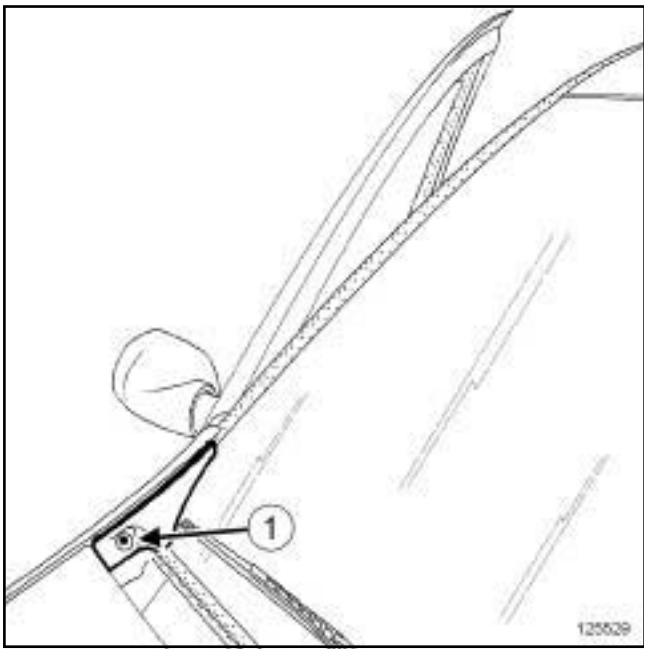

125529

❑ Remove the bolt (**1**) .

108663

❑ Unclip the trim (**2**) .

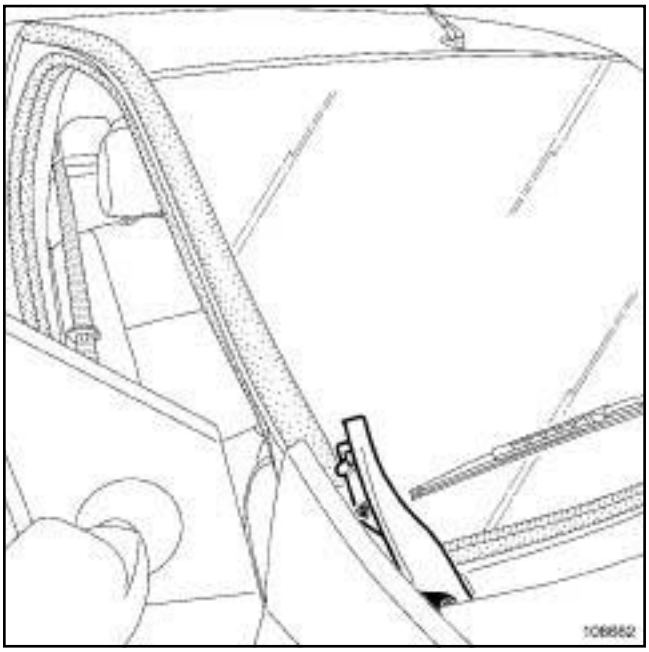

108662

❑ Remove the trim.

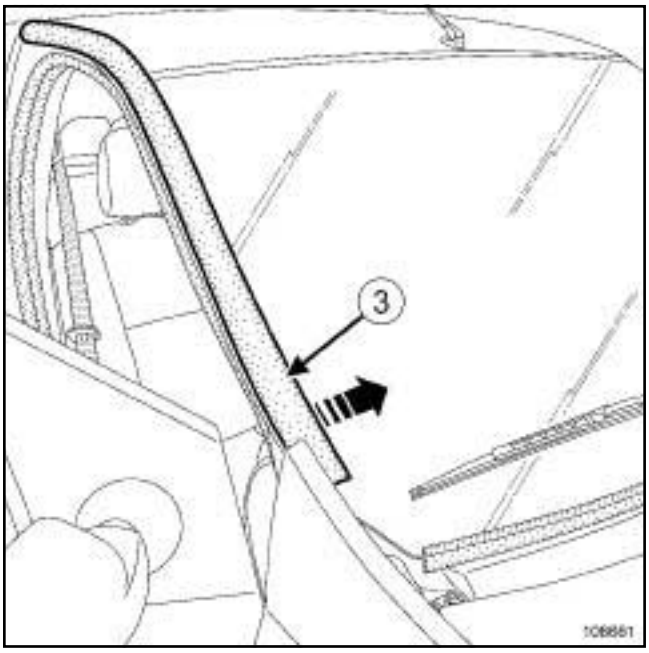

108661

❑ Partially remove the seals (**3**) .

❑ Remove the windscreen wiper arms (see **Windscreen wiper arm: Removal - Refitting**) (85A, Wiping - Washing).

❑ Protect the windscreen surround and the headlining with masking tape.

H79

❑ Fit the toolon the dashboard.

II - REMOVAL OPERATION

❑ Cut the cement bead (see **Technical Note 0560A**).

❑ Remove the windscreen (this operation requires two people).

REFITTING

I - REFITTING PREPARATION OPERATION

❑ **parts always to be replaced: Windscreen adjusting shim**

❑ Fit new shims and retaining stops.

❑ For preparation and bonding, (see **Technical Note 0560A**).

II - REFITTING OPERATION

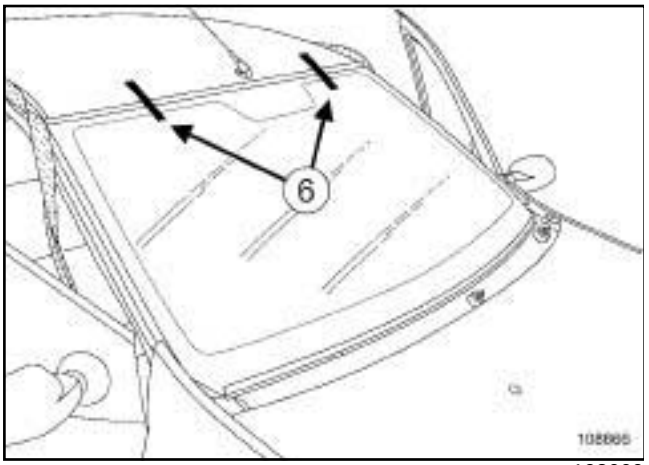

108666

❑ Bond the windscreen (this operation requires two people).

❑ Respect the following clearances and flush fitting:

- « windscreen - roof »
- « windscreen - windscreen pillar »

❑ Stick on strips of masking tape ***(6)*** to hold the windscreen in position while the cement is drying.

❑ Proceed in the reverse order to removal.

REMOVAL

I - REMOVAL PREPARATION OPERATION

❑ Remove the front side door trim (see **Front side door trim: Removal - Refitting**) (72A, Side opening elements trim).

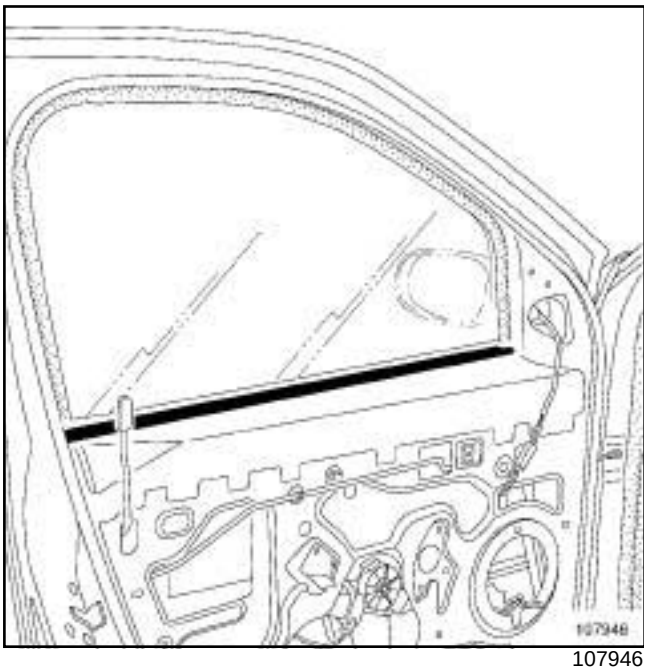

107946

❑ Remove the interior weatherstrip.

❑ Lower the window.

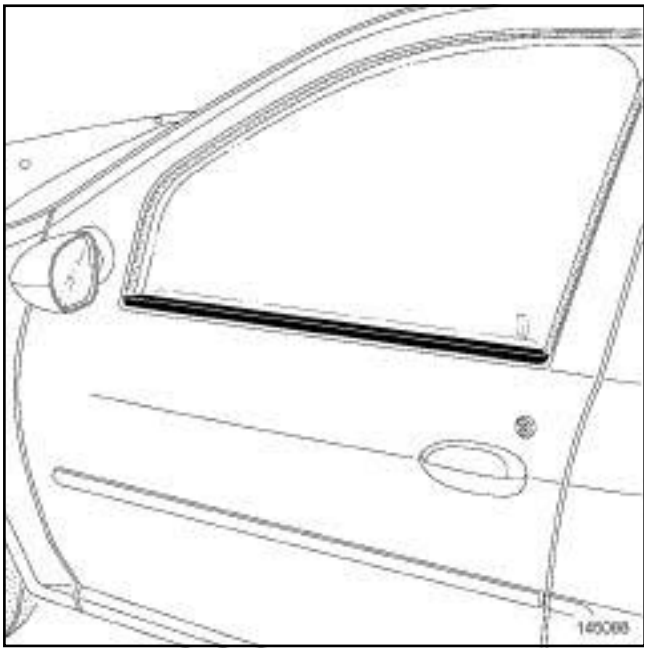

145088

❑ Remove the exterior weatherstrip.

II - REMOVAL OPERATION

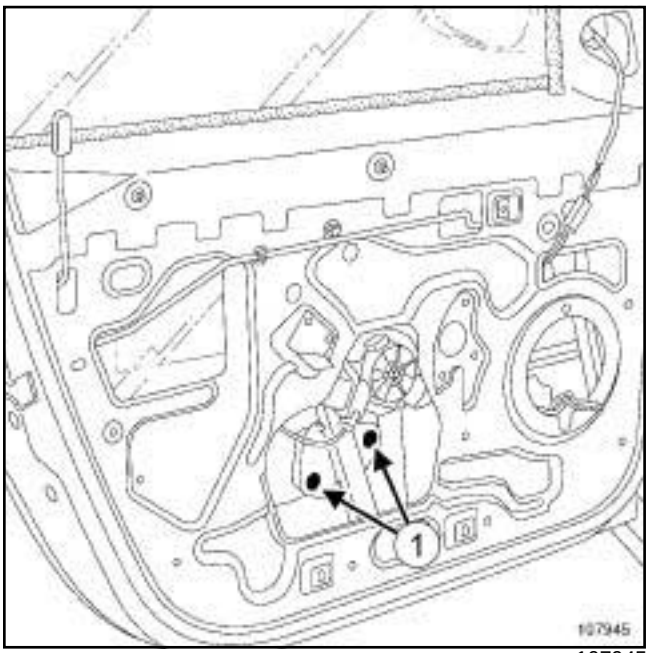

107945

❑ Remove the bolts (**1**) .

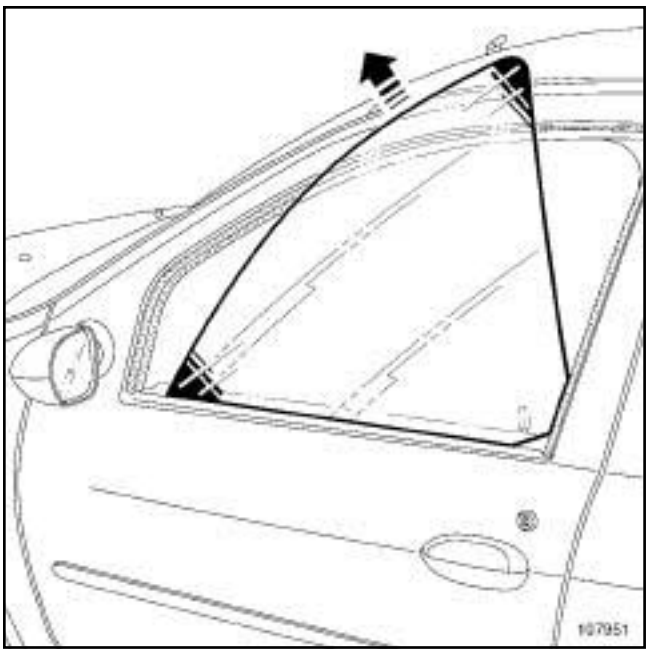

107951

❑ Remove the window.

REFITTING

I - REFITTING PREPARATION OPERATION

❑ **parts always to be replaced: front side opening element sliding window bolt**

II - REFITTING OPERATION

❑ Refit the window.

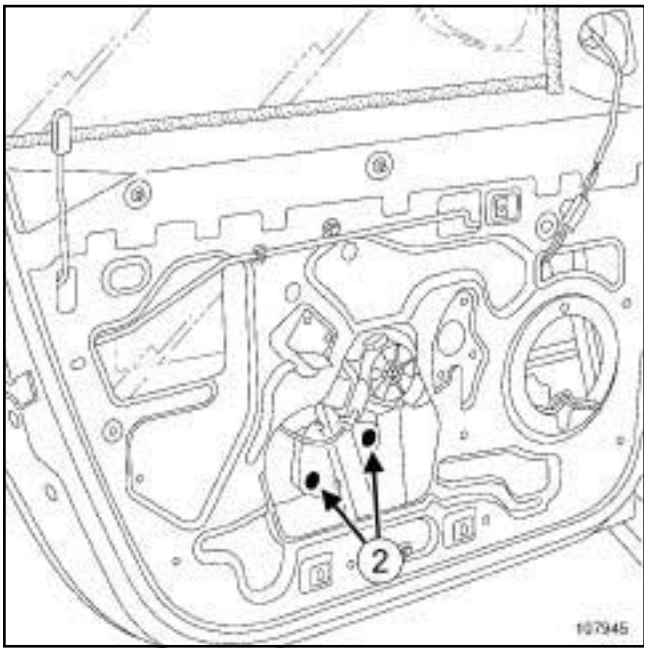

107945

❑ Refit the bolts (**2**) without tightening them.

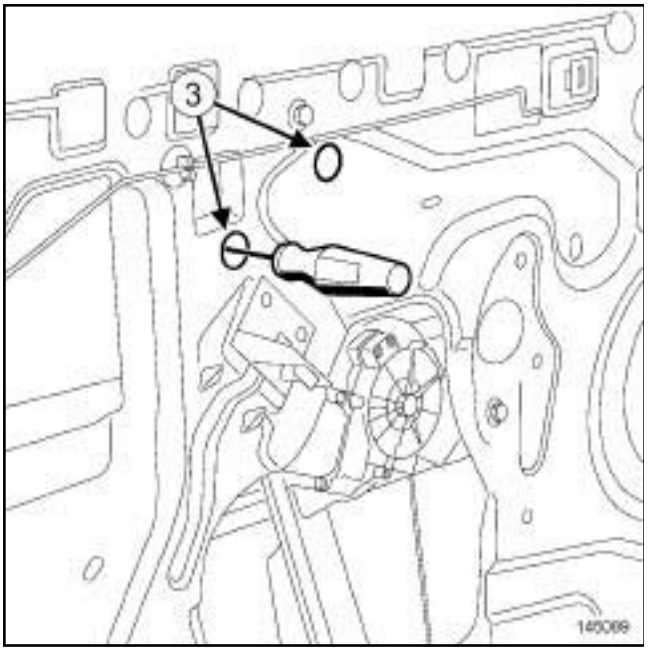

145089

❑ Tighten the bolts ***(2)*** through the holes (**3**) .

❑ Carry out a function test.

III - FINAL OPERATION

❑ Proceed in the reverse order to removal.

REMOVAL

I - REMOVAL PREPARATION OPERATION

❑ Remove the rear side door trim (see **Rear side door trim: Removal - Refitting**) (72A, Side opening element trim).

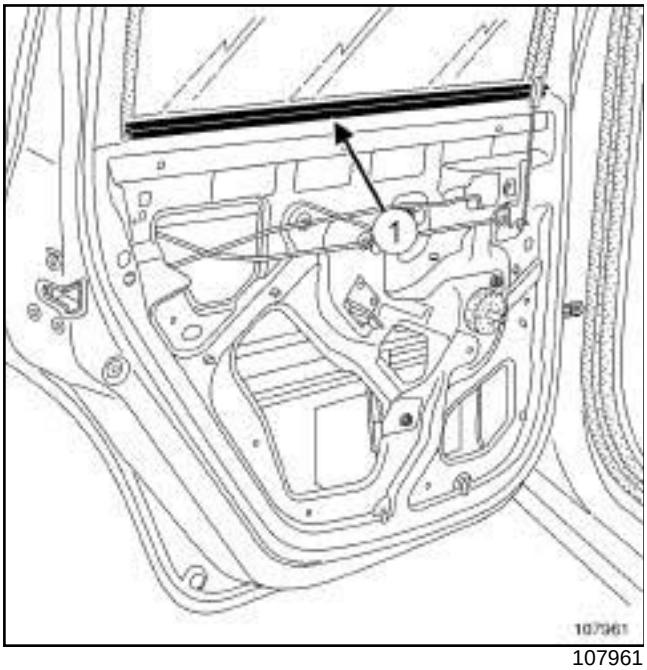

107961

❑ Remove the interior weatherstrip (**1**) .

❑ Remove the channel from its mounting.

❑ Remove the channel mounting (see **51A**, **Side opening element mechanisms**, **Rear side door slide mounting: Removal - Refitting**, page **51A-20**) (51A, Side opening element mechanisms).

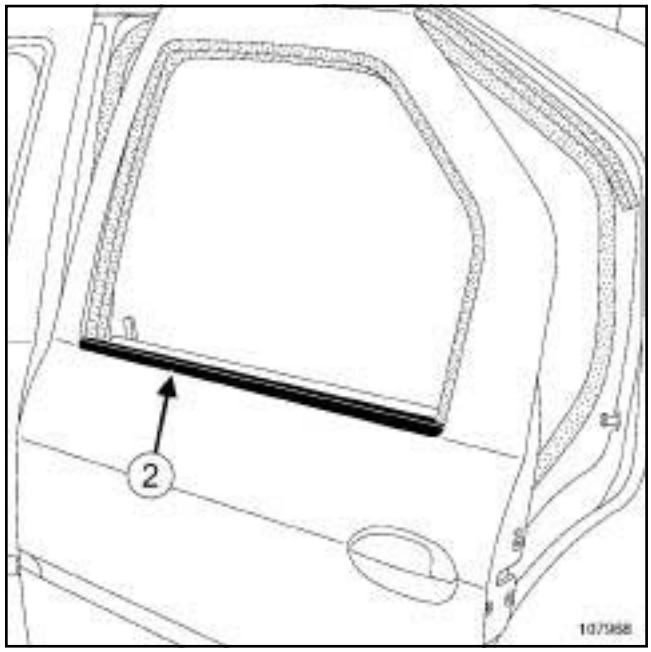

107968

❑ Lower the window.

❑ Remove the exterior weatherstrip (**2**) .

II - REMOVAL OPERATION

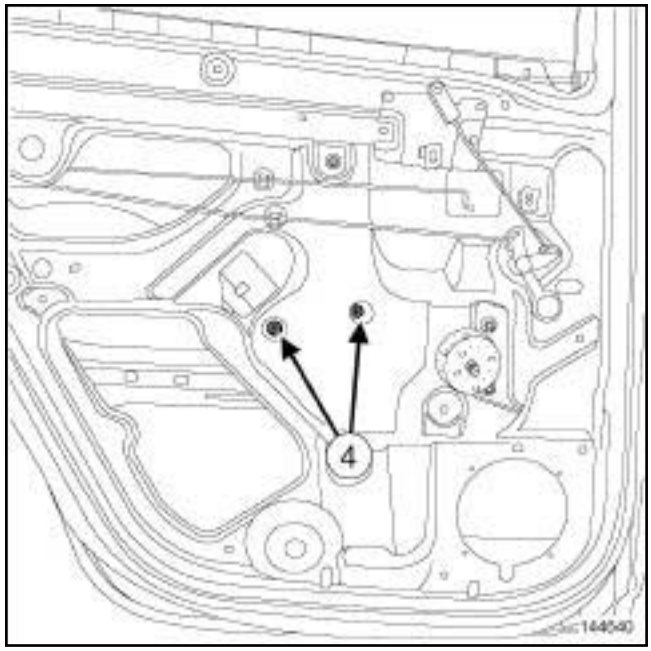

144640

❑ Remove the bolts (**4**) .

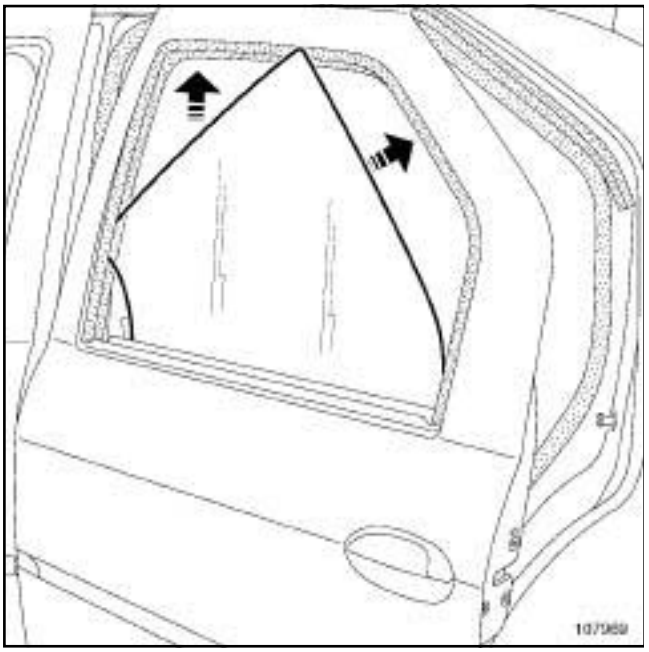

107969

❑ Remove the window.

REFITTING

I - REFITTING PREPARATION OPERATION

❑ **parts always to be replaced: rear side opening element sliding window bolt**

II - REFITTING OPERATION

❑ Refit the window.

❑ Refit the bolts ***(4)*** .

❑ Carry out a function test.

III - FINAL OPERATION

❑ Proceed in the reverse order to removal.

REMOVAL

I - REMOVAL PREPARATION OPERATION

❏ Remove (see **Interior body side trim assembly: Exploded view**) :

- the C-pillar trim,
- the parcel shelf side trim,
- the C-pillar upper trim.

II - REMOVAL OPERATION

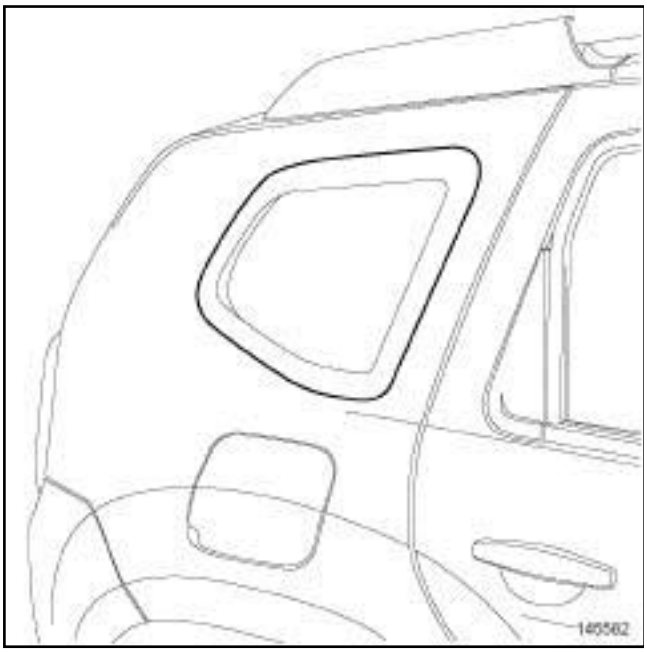

145582

❏ Protect the edges of the quarter panel window using masking tape.

❏ Cut the cement bead **(see Technical Note 0560A)**.

❏ Remove the rear quarter panel window (this operation requires two people).

REFITTING

I - REFITTING PREPARATION OPERATION

❏ **parts always to be replaced: Windscreen adjusting shim**.

❏ Fit new shims and retaining stops.

❏ For preparation and bonding **(see Technical Note 0560A)**.

II - REFITTING OPERATION

❏ Bond the rear quarter panel window (this operation requires two people).

❏ Equal out the clearances and shut lines.

❏ Remove the tabs from the stops when the adhesive has dried.

III - FINAL OPERATION

❏ Proceed in the reverse order to removal.

REMOVAL

I - REMOVAL PREPARATION OPERATION

❑ Remove:

- the tailgate trim (see **Tailgate trim: Removal - Refitting**) (73A, Non-side opening elements trim),
- the rear screen wiper arm (see **Rear screen wiper arm: Removal - Refitting**) (85A, Wiping - Washing),
- the rear screen wiper motor (see **Rear screen wiper motor: Removal - Refitting**) (85A, Wiping - Washing),
- the high level brake light (see **3rd brake light: Removal - Refitting**) (81A, Rear lighting).

❑ Disconnect the heated rear screen wiring harness.

II - REMOVAL OPERATION

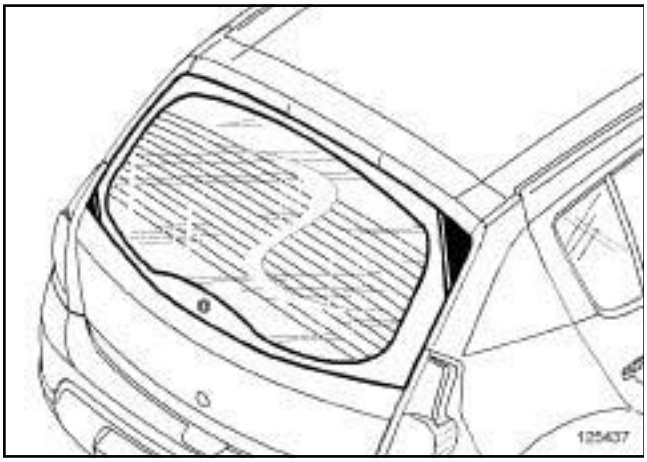

125437

❑ Protect the edges of the rear screen using masking tape.

❑ Cut the cement bead (see **Technical Note 0560A**).

❑ Remove the rear screen window (this operation requires two people).

REFITTING

I - REFITTING PREPARATION OPERATION

❑ **parts always to be replaced: Rear screen adjusting shim**

❑ Refit the rear screen wiper motor (see **Rear screen wiper motor: Removal - Refitting**) (85A, Wiping - Washing) to act as a guide for positioning the rear screen.

❑ For preparation and bonding (see **Technical Note 0560A**).

II - REFITTING OPERATION FOR PART CONCERNED

❑ Bond the rear screen (two people are required for this operation).

❑ Equal out the clearances and shut lines.

❑ Remove the tabs from the stops once the adhesive has dried.

III - FINAL OPERATION

❑ Connect the heated rear screen wiring harness connectors.

❑ Refit:

- the high level brake light (see **3rd brake light: Removal - Refitting**) (81A, Rear lighting),
- the rear screen wiper arm (see **Rear screen wiper arm: Removal - Refitting**) (85A, Wiping - Washing),
- the rear screen wiper blade (see **Rear screen wiper blade: Removal - Refitting**) (85A, Wiping - Washing),
- the tailgate trim (see **Tailgate trim: Removal - Refitting**) (73A, Non-side opening elements trim).

Front bumper assembly: Exploded view

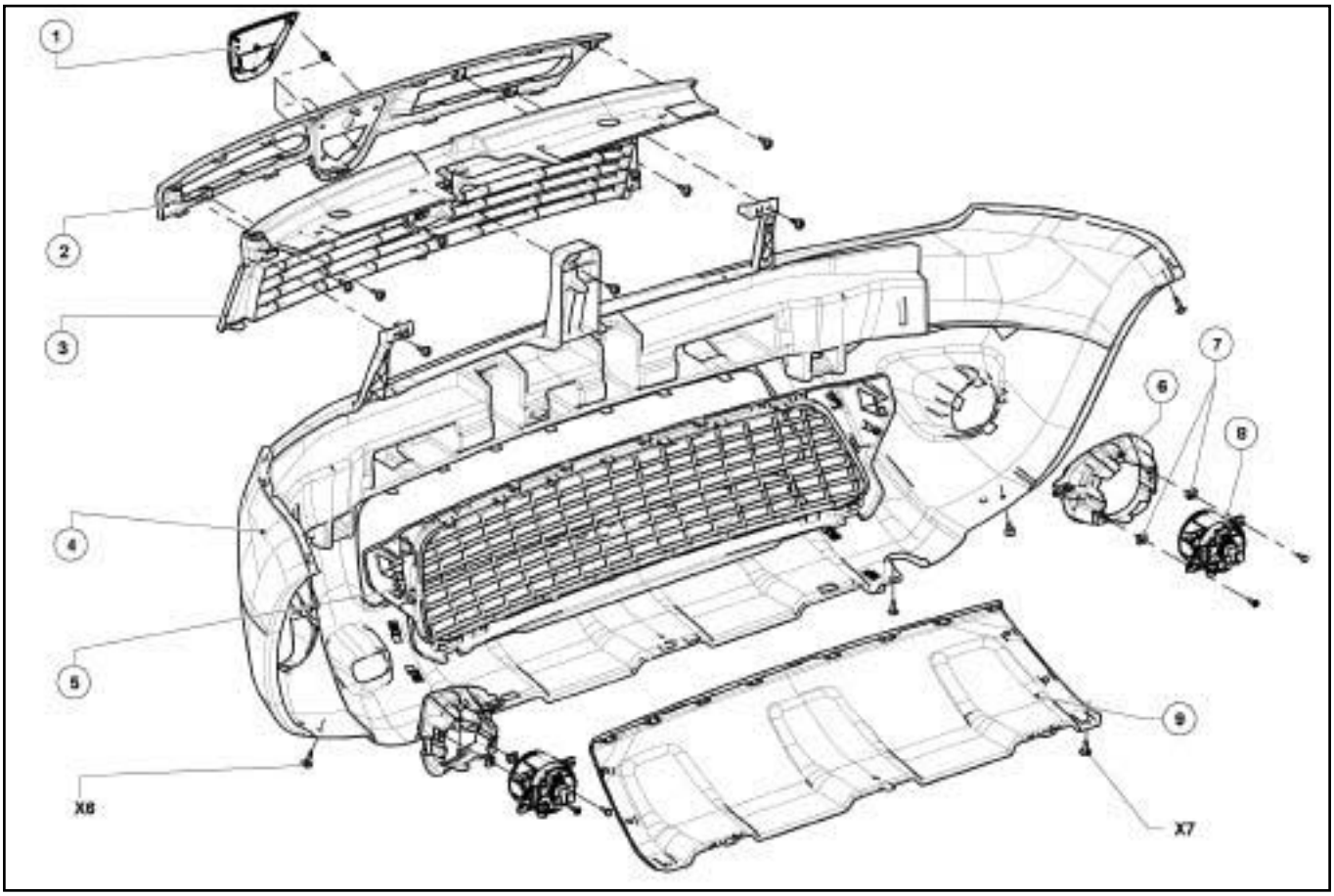

146092

(see **Illustration key: Description**) (01D, Mechanical introduction).

Mark	Description	Information
1	Front badge	
2	Front bumper upper trim	Material: ABS
3	Radiator grille	Material: ASA
4	Front bumper	Material: P/E (see **55A**, **Exterior protection**, **Front bumper: Removal - Refitting**, page **55A-8**) (see **55A**, **Exterior protection**, **Exterior body front trim assembly: Exploded view**, page **55A-5**) (see **Polypropylene bodywork component: Preparation and paint range**) (Technical Note 0592A, Paint application range for plastic). (see **Plastic material bodywork component: Repair**) (50A, General information).

Mark	Description	Information
5	Front bumper lower grille	Material: P/E+EPDM
6	Fog light mounting	
7	Fog light mounting clip	
8	Fog light	(see **Front fog light bulb: Removal - Refitting**) (80B Headlights).
9	Front bumper centre trim	Material: P/E

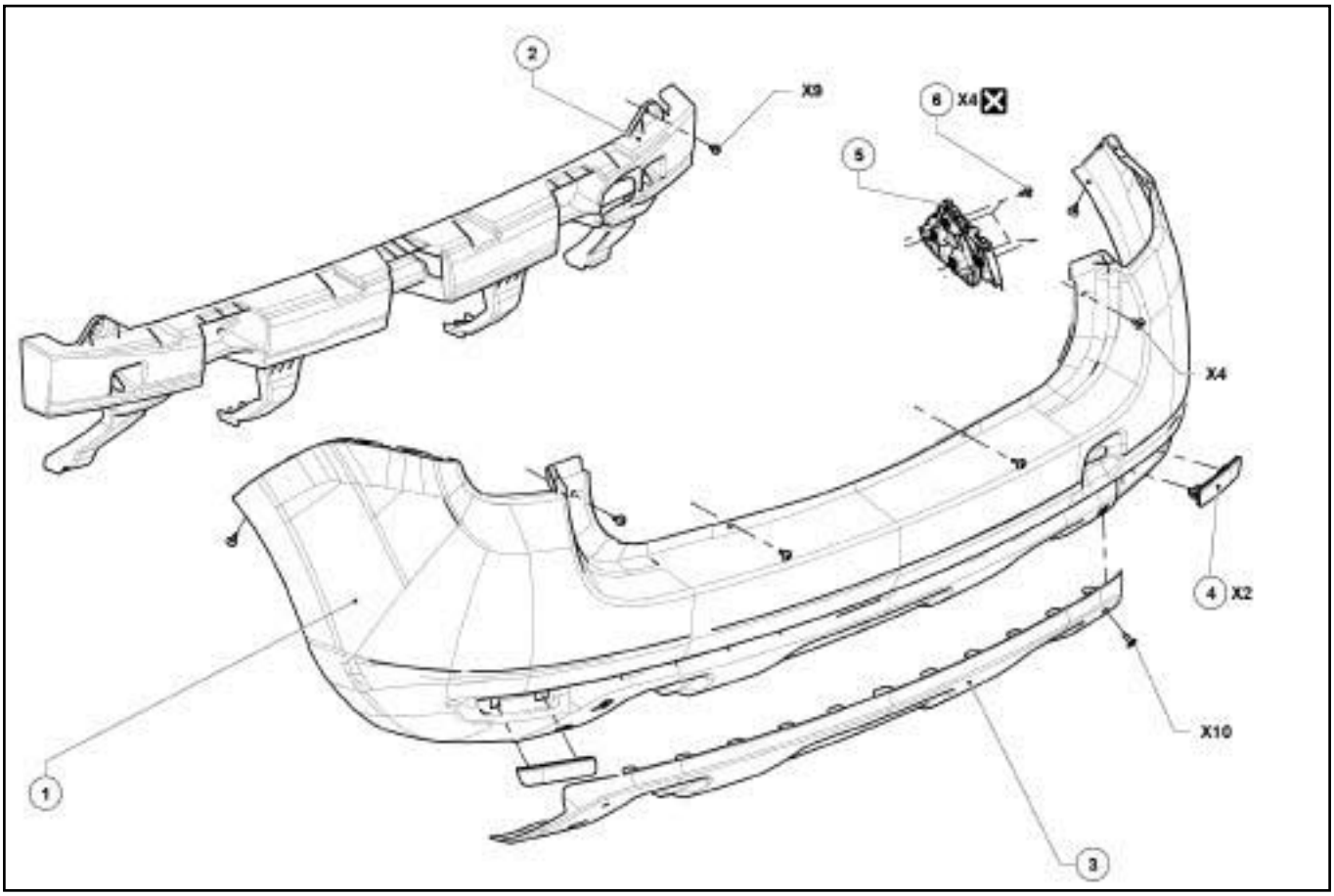

146093

(see **Illustration key: Description**) (01D, Mechanical introduction).

Mark	Description	Information
1	Rear bumper	Material: P/E (see **55A**, **Exterior protection**, **Rear bumper: Removal - Refitting**, page **55A-9**) (see **Polypropylene bodywork component: Preparation and paint range**) (Technical Note 0592A, Paint application range for plastic). (see **Plastic material bodywork component: Repair**) (50A, General information).
2	Rear bumper absorber	
3	Rear bumper trim	Material: PP
4	Reflector	

Mark	Description	Information
5	Side pressure piece of rear bumper	
6	Rivet of side pressure piece of rear bumper	

Exterior body front trim assembly: Exploded view

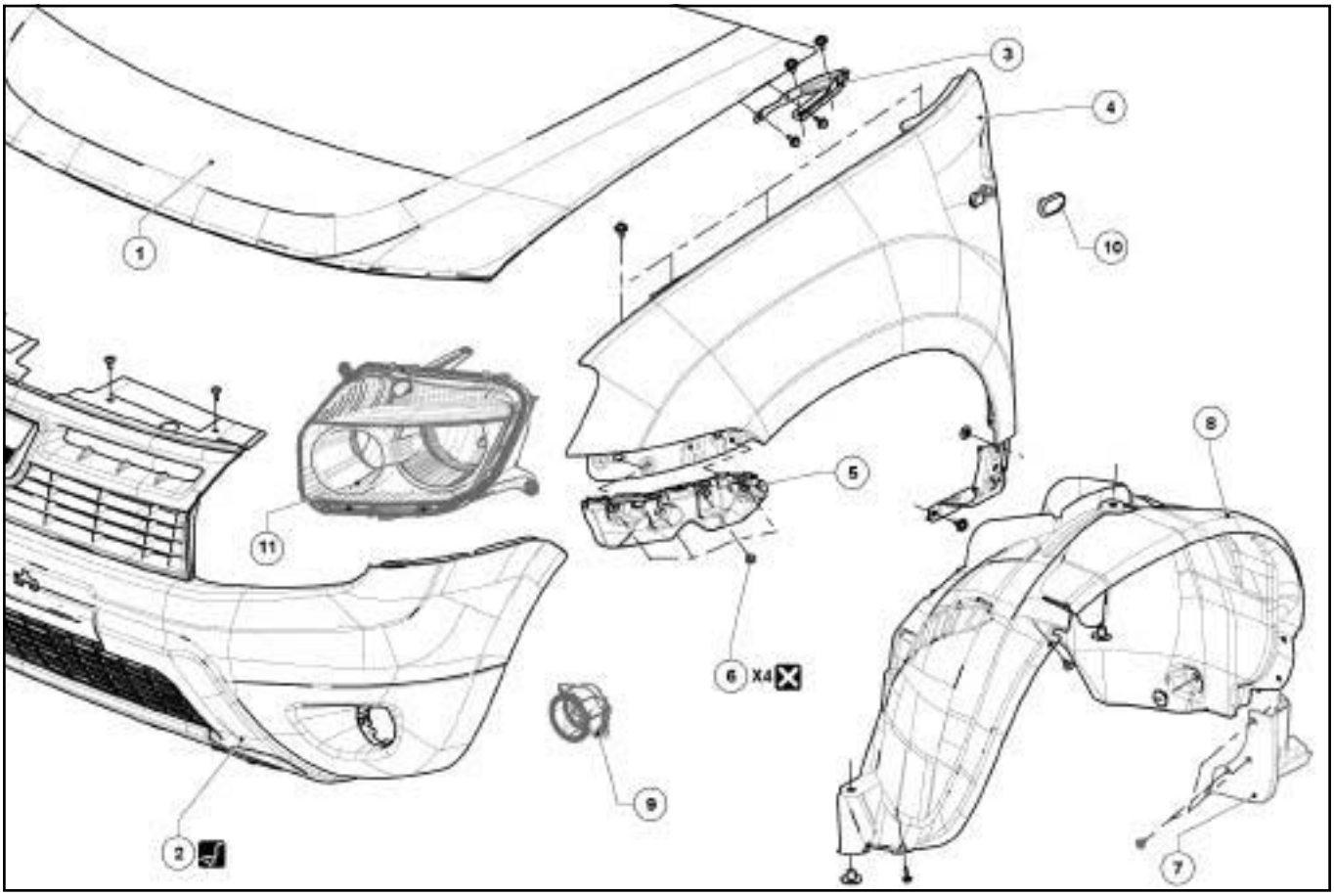

146095

(see **Illustration key: Description**) (01D, Mechanical introduction).

Mark	Description	Information
1	Bonnet	Material: Steel (see **Bonnet: Removal - Refitting**) (48A, Non-side opening elements). (see **Steel bodywork component: Preparation and paint range**) (Technical Note 0592A, Paint application range for panels).
2	Front bumper	Material: P/E (see **55A**, **Exterior protection**, **Front bumper: Removal - Refitting**, page **55A-8**) (see **55A**, **Exterior protection**, **Front bumper assembly: Exploded view**, page **55A-1**) (see **Polypropylene bodywork component: Preparation and paint range**) (Technical Note 0592A, Paint application range for plastic). (see **Plastic material bodywork component: Repair**) (50A, General information).
3	Bonnet hinge	
4	Front wing	Material: Steel (see **Front wing: Removal - Refitting**) (42A, Upper front structure). (see **Steel bodywork component: Preparation and paint range**) (Technical Note 0592A, Paint application range for panels).
5	Side pressure piece of front bumper	
6	Rivet of side pressure piece of front bumper	
7	Front section of sill panel extender	(see **56A**, **Exterior equipment**, **Exterior body side trim assembly: Exploded view**, page **56A-1**)
8	Front wheel arch liner	Material: P/E
9	Fog light	(see **Front fog light bulb: Removal - Refitting**) (80B Headlights).

Mark	Description	Information
10	Side indicator	(see **Side indicator: Removal - Refitting**) (80B Headlights).
11	Headlight	(see **Headlight assembly: Exploded view**) (80B Headlights).

Special tooling required	
Car. 1363	Set of trim removal levers.

Location and specifications (tightening torques, parts always to be replaced, etc.) (see **55A**, **Exterior protection**, **Front bumper assembly: Exploded view**, page **55A-1**) and (see **55A**, **Exterior protection**, **Exterior body front trim assembly: Exploded view**, page **55A-5**) .

REMOVAL

I - REMOVAL PREPARATION OPERATION

❏ Position the vehicle on a two-post lift (see **Vehicle: Towing and lifting**) (02A, Lifting equipment).

II - REMOVAL OPERATION

❏ Remove (see **55A**, **Exterior protection**, **Front bumper assembly: Exploded view**, page **55A-1**) :

- the front wheel arch liner bolts on the front bumper on each side of the vehicle,
- the lower bolts of the front bumper.

❏ Remove the upper bolts of the front bumper (see **55A**, **Exterior protection**, **Exterior body front trim assembly: Exploded view**, page **55A-5**) .

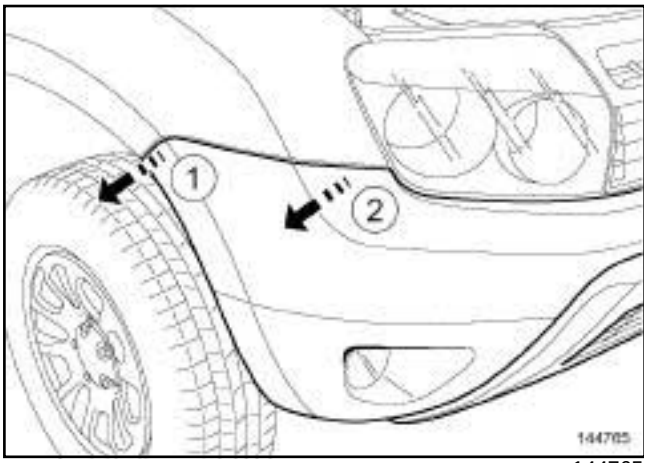

144765

❏ Unclip the side sections of the front bumper at (**1**) and (**2**) using the tool **(Car. 1363)**.

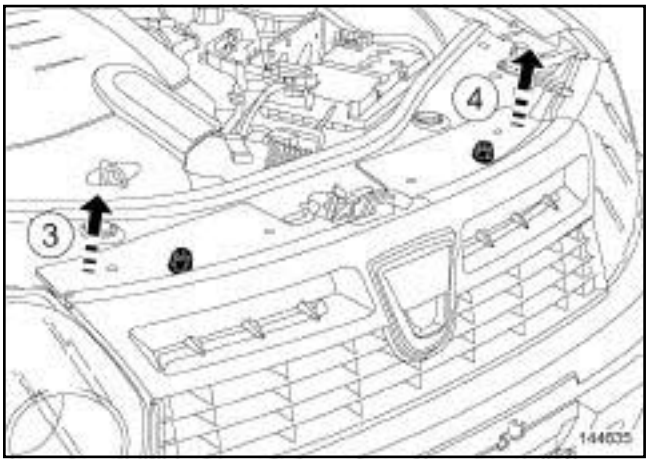

144635

❏ Slightly raise the upper section of the front bumper at (**3**) and (**4**) (this operation requires two people).

FOG LIGHTS

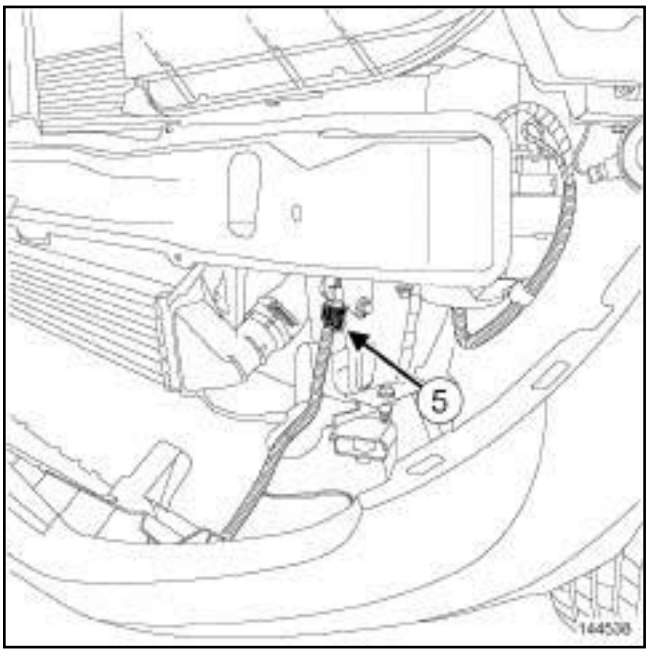

144538

❏ Partially remove the front bumper (this operation requires two people).

❏ Unclip the fog lights connector (**5**) .

❏ Disconnect the fog lights connector.

❏ Remove the front bumper (this operation requires two people).

REFITTING

❏ Proceed in the reverse order to removal.

Location and specifications (tightening torques, parts always to be replaced, etc.) (see **55A**, **Exterior protection**, **Rear bumper assembly: Exploded view**, page **55A-3**) .

REMOVAL

I - REMOVAL PREPARATION OPERATION

❑ Position the vehicle on a two-post lift (see **Vehicle: Towing and lifting**) (02A, Lifting equipment).

❑ Remove the rear wing lights (see **Rear light assembly: Exploded view**) (81A, Rear lighting).

II - REMOVAL OPERATION

❑ Remove (see **55A**, **Exterior protection**, **Rear bumper assembly: Exploded view**, page **55A-3**) :

- the rear wheel arch liner bolts on the rear bumper on each side of the vehicle,
- the lower bolts of the rear bumper,
- the upper bolts of the rear bumper.

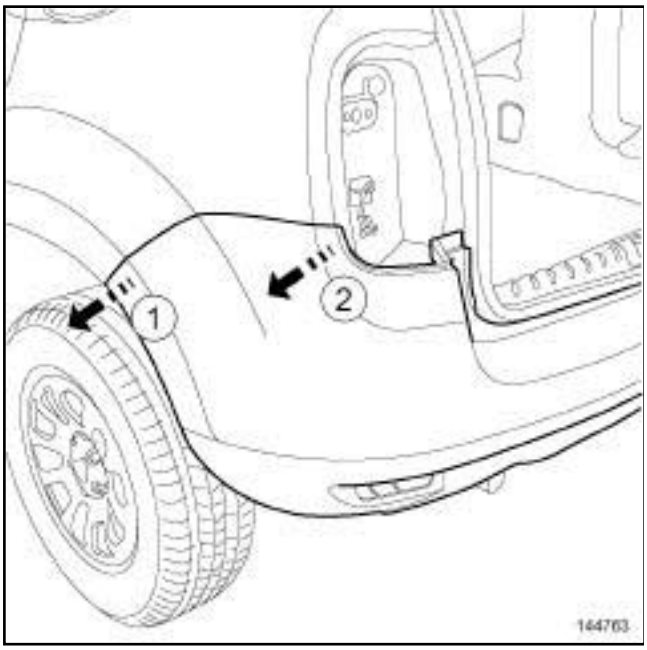

144763

❑ Unclip the side sections of the rear bumper at (**1**) and (**2**) .

❑ Remove the rear bumper (this operation requires two people).

REFITTING

❑ Proceed in the reverse order to removal.

Location and specifications (tightening torques, parts always to be replaced, etc.) (see **55A**, **Exterior protection**, **Exterior body front trim assembly: Exploded view**, page **55A-5**) .

REMOVAL

I - REMOVAL PREPARATION OPERATION

❏ Position the vehicle on a two-post lift (see **Vehicle: Towing and lifting**) (02A, Lifting equipment).

❏ Remove the front wheel on the side concerned (see **Wheel: Removal - Refitting**) (35A, Wheels and tyres).

II - REMOVAL OPERATION

❏ Remove (see **55A**, **Exterior protection**, **Exterior body front trim assembly: Exploded view**, page **55A-5**) :

- the front wheel arch liner bolts,
- the front wheel arch liner clips,
- the front wheel arch liner.

REFITTING

❏ Proceed in the reverse order to removal.

REMOVAL

I - REMOVAL PREPARATION OPERATION

❑ Position the vehicle on a two-post lift (see **Vehicle: Towing and lifting**) (02A, Lifting equipment).

❑ Remove the rear wheel on the side concerned (see **Wheel: Removal - Refitting**) (35A, Wheels and tyres).

II - REMOVAL OPERATION

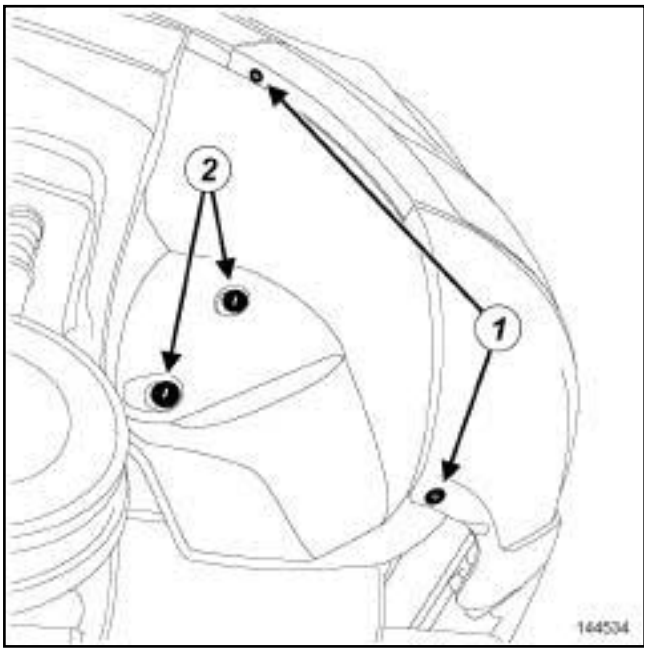

144534

❑ Remove:

- the bolts (**1**) ,
- the clips (**2**) .
- the rear wheel arch liner.

REFITTING

I - REFITTING PREPARATION OPERATION

❑ Check the condition of the clipsand replace them if necessary.

II - REFITTING OPERATION

❑ Proceed in the reverse order to removal.

Exterior body side trim assembly: Exploded view

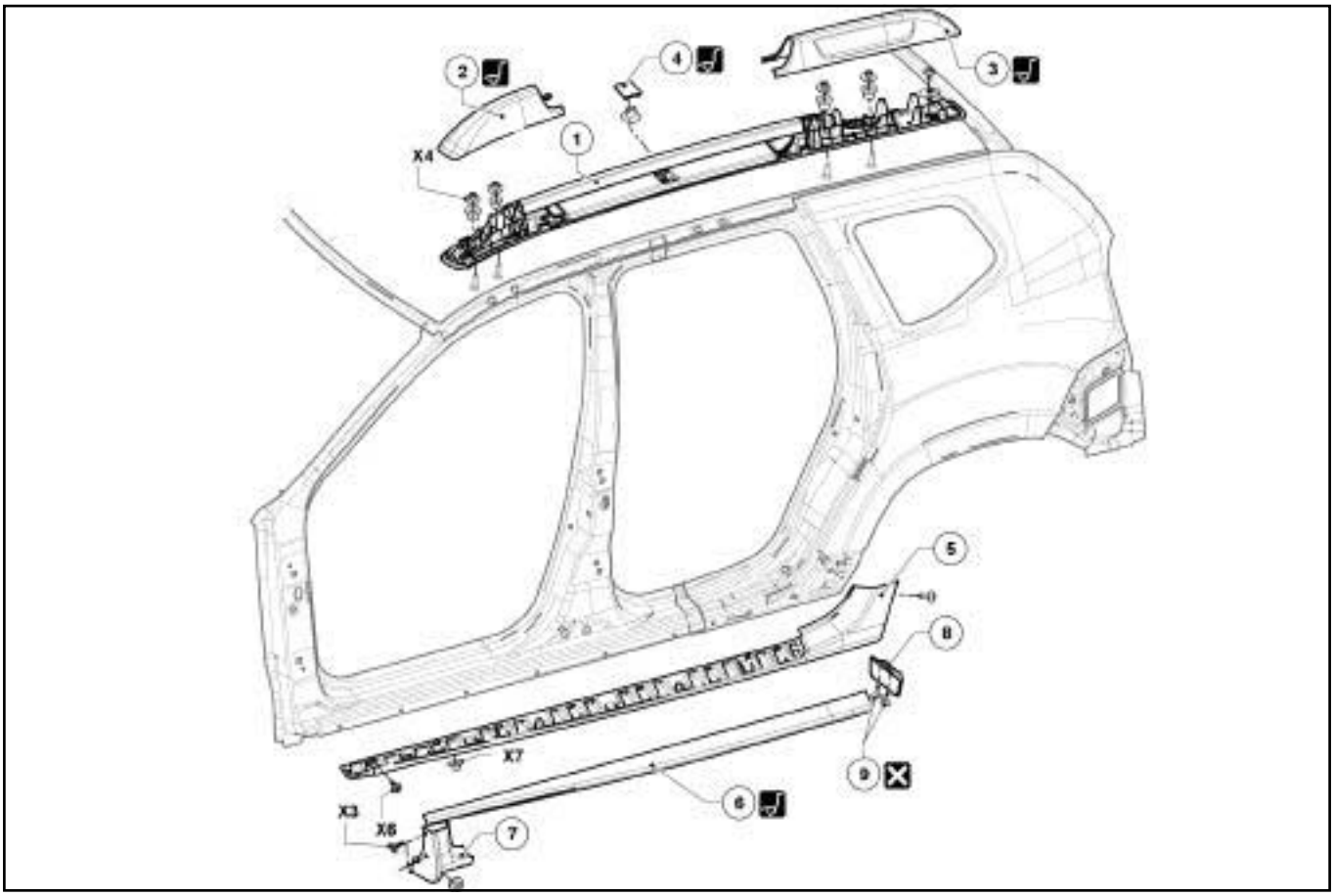

146188

(see **Illustration key: Description**) (01D, Mechanical introduction).

Mark	Description	Information
1	Roof bar	
2	Roof bar front trim	(Car.1363)
3	Roof bar rear trim	(Car.1363)
4	Central mounting access flap	(Car.1363)

Mark	Description	Information
5	Sill panel extender	Material: P/E
6	Sill panel extender trim	Material: P/E (Car.1363)
7	Front section of sill panel extender	Material: P/E
8	Flap	
9	Flap rivet	

REMOVAL

I - REMOVAL PREPARATION OPERATION

❑ Remove the front side door trim (see **Front side door trim: Removal - Refitting**) (72A, Side opening elements trim).

II - REMOVAL OPERATION

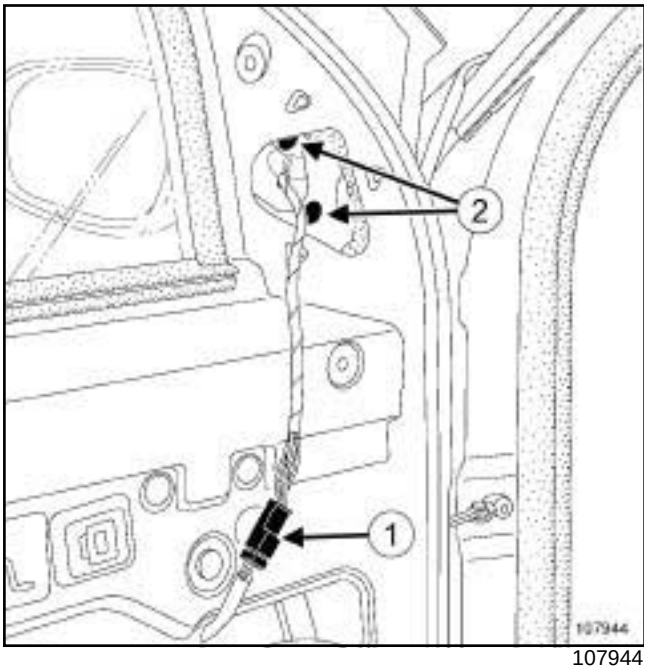

107944

❑ Disconnect the connector (**1**) (depending on equipment level).

❑ Remove the bolts (**2**) .

❑ Remove the door mirror.

REFITTING

❑ Proceed in the reverse order to removal.

Special tooling required	
Car. 1363	Set of trim removal levers.

REMOVAL

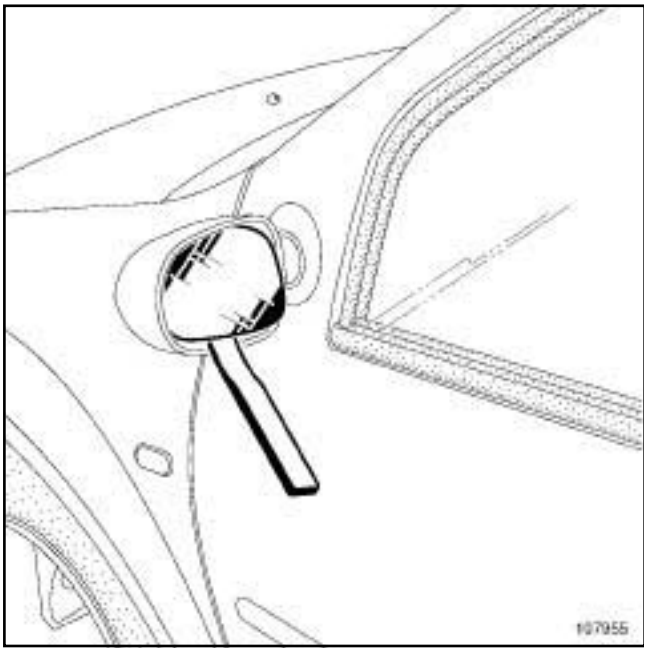

107955

- ❑ Protect the edge of the rear-view mirror (masking tape).
- ❑ Use the **(Car. 1363)** as a lever to unclip the glass.
- ❑ Disconnect the supply terminals (depending on equipment level).

REFITTING

- ❑ Offer up the glass.
- ❑ Clip the mirror.

Special tooling required	
Car. 1363	Set of trim removal levers.

REMOVAL

OPERATION FOR REMOVAL OF PART CONCERNED

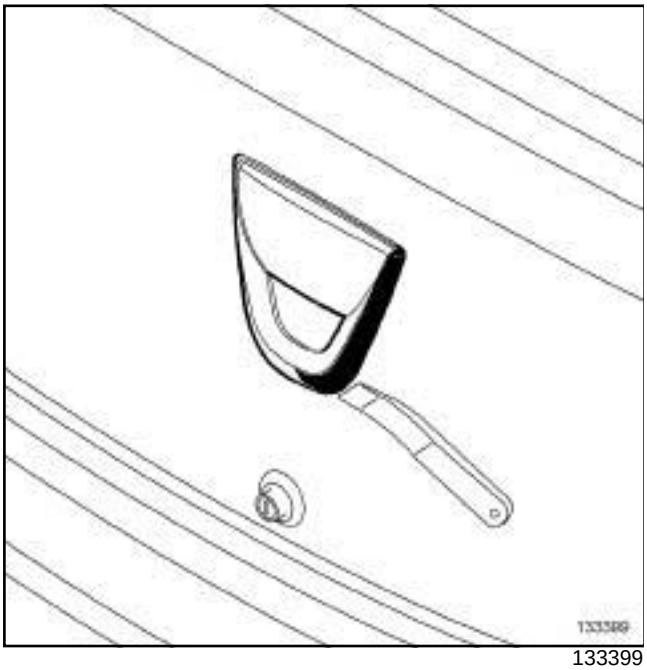

133399

❑ Unclip the rear badge using the tool **(Car. 1363)**.

REFITTING

REFITTING OPERATION FOR PART CONCERNED

❑ Clip on the rear badge.

Equipment required
Diagnostic tool

IMPORTANT

To avoid any risk of triggering when working on or near a pyrotechnic component (airbags or pretensioners), lock the airbag computer using the diagnostic tool.

When this function is activated, all the trigger lines are inhibited and the airbag warning light on the instrument panel lights up continuously (ignition on).

IMPORTANT

Never handle the pyrotechnic systems (pretensioners or airbags) near to a source of heat or naked flame - they may be triggered.

REMOVAL

I - REMOVAL PREPARATION OPERATION

❏ Lock the airbag computer using the **Diagnostic tool** (see **Fault finding - Replacement of components**) (88C, Airbags and pretensioners).

❏ Disconnect the battery (see **Battery: Removal - Refitting**) (80A, Battery).

❏ Remove:

- the windscreen pillar trims (see **Windscreen pillar trim: Removal - Refitting**) (71A, Body internal trim),
- the driver's front airbag (see **Driver's frontal airbag: Removal - Refitting**) (88C, Airbags and pretensioners),
- the steering wheel (see **Steering wheel: Removal - Refitting**) (36A, Steering assembly),
- the steering column switch assembly (see **Steering column switch assembly: Removal - Refitting**) (84A, Control - Signals),
- the instrument panel (see **Instrument panel: Removal - Refitting**) (83A, Instrument panel),
- the centre console (see **57A**, **Interior equipment**, **Centre console: Removal - Refitting**, page **57A-10**) ,
- the radio (see **Radio: Removal - Refitting**) (86A, Radio).

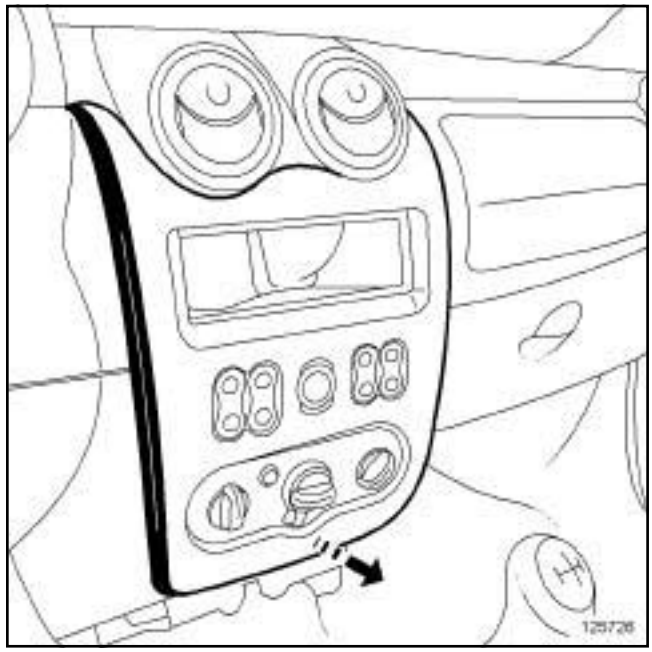

125726

❏ Unclip the central trim assembly at the bottom.

❏ Withdraw the central trim assembly.

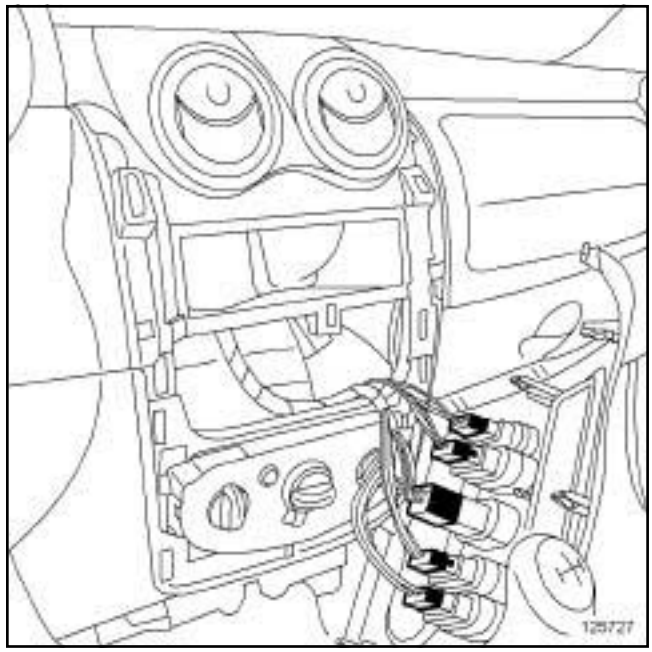

125727

❏ Disconnect the central trim connectors.

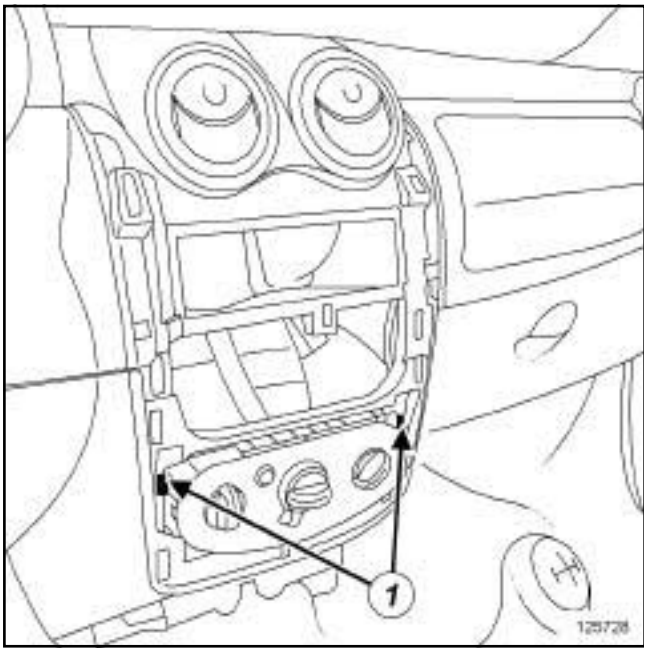

125728

❑ Unclip the (**1**) control panel on the dashboard.

II - OPERATION FOR REMOVAL OF PART CONCERNED

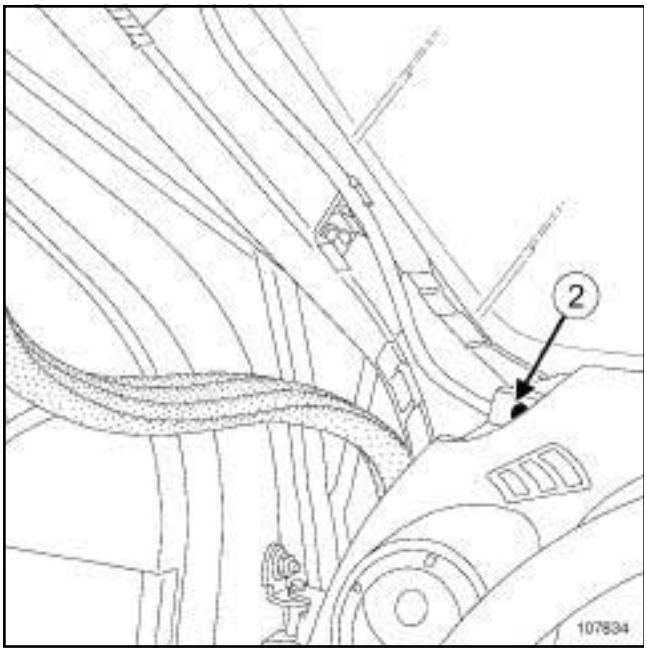

107834

❑ Remove the bolts (**2**) from both sides of the dashboard.

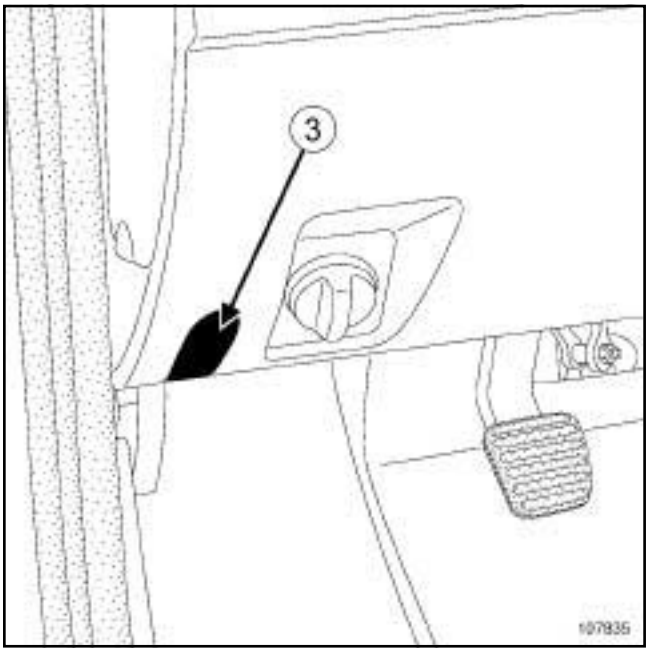

107835

❑ Unclip the covers (**3**) on both sides of the dashboard.

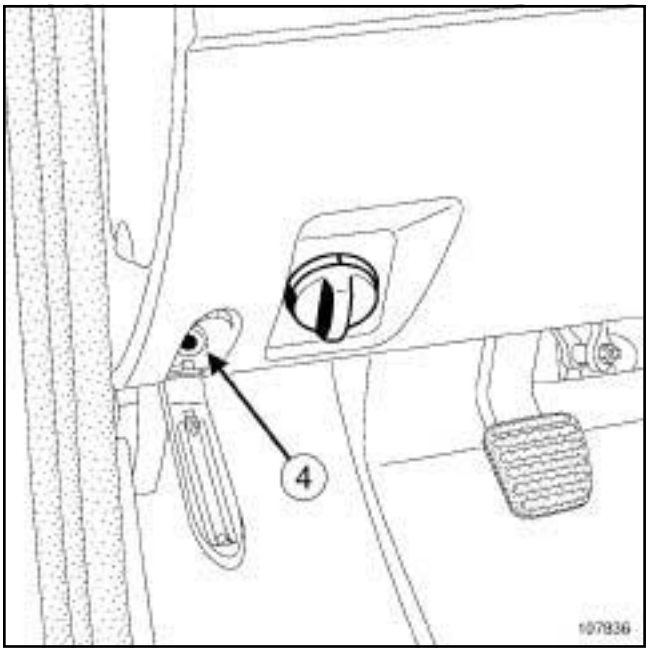

107836

❑ Remove the bolts (**4**) from both sides of the dashboard.

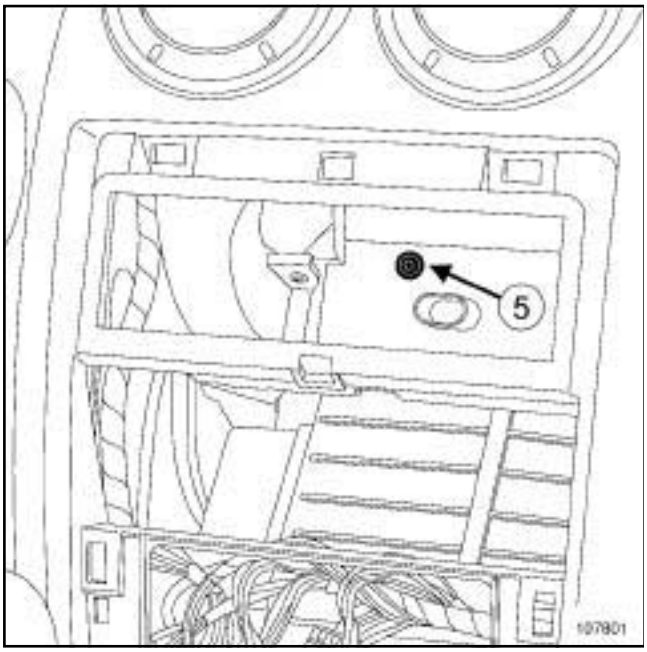

107801

❑ Remove the bolt (**5**) .

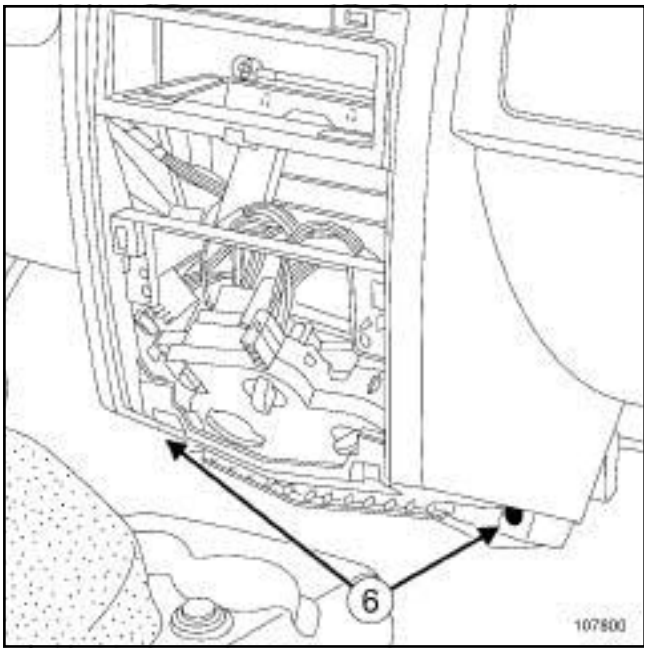

107800

❑ Remove the bolts (**6**) .

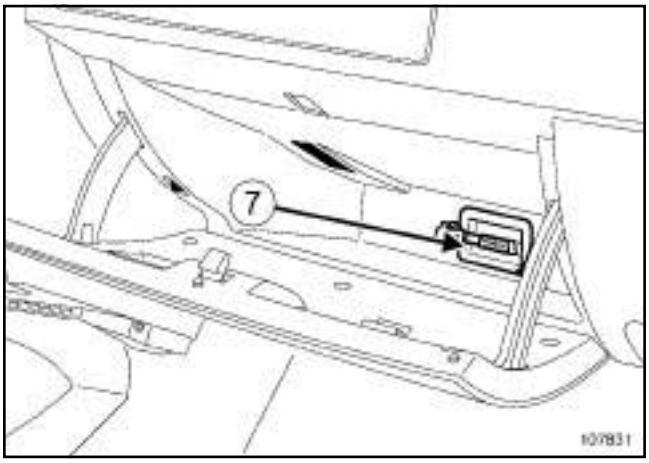

107831

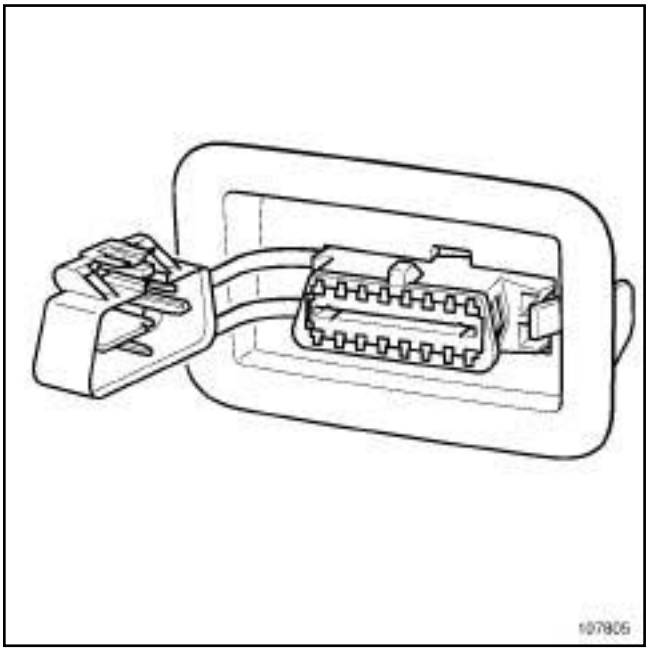

107805

❑ Remove the diagnostic socket (**7**) .

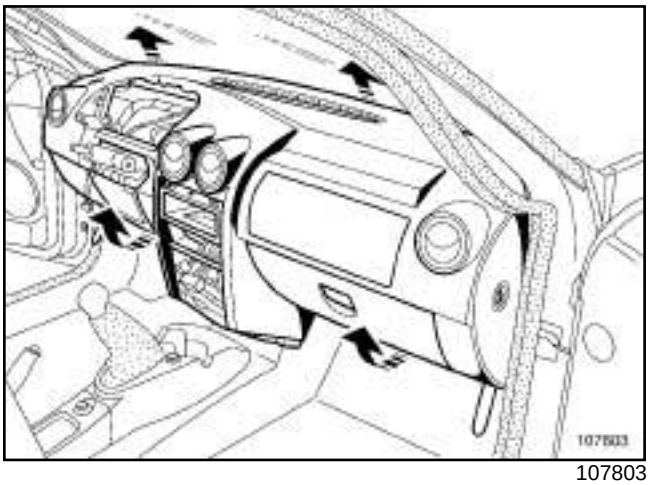

107803

❑ Partially remove the dashboard (this operation requires two people).

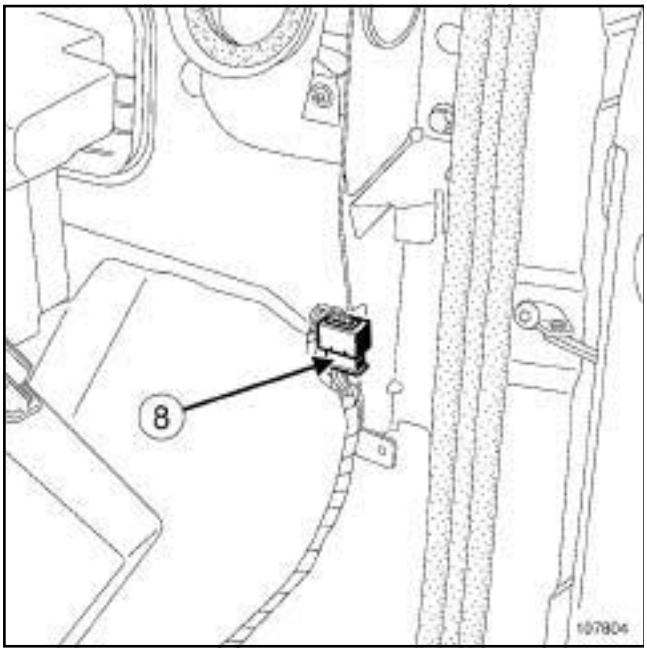

107804

❑ Disconnect the connector (**8**) .

❑ Remove:

- the dashboard (this operation requires two people),
- the passenger front airbag (depending on equipment level) (see **Passenger's frontal airbag: Removal - Refitting**) (88C, Airbags and pretensioners).

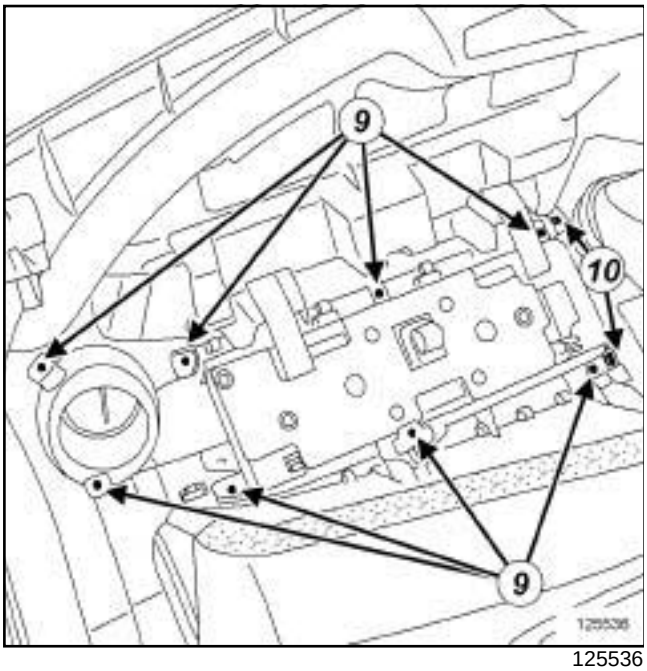

125536

❑ Remove the bolts (**9**) .

❑ Unclip the right-hand side trim at (**10**) .

❑ Remove the right-hand side trim.

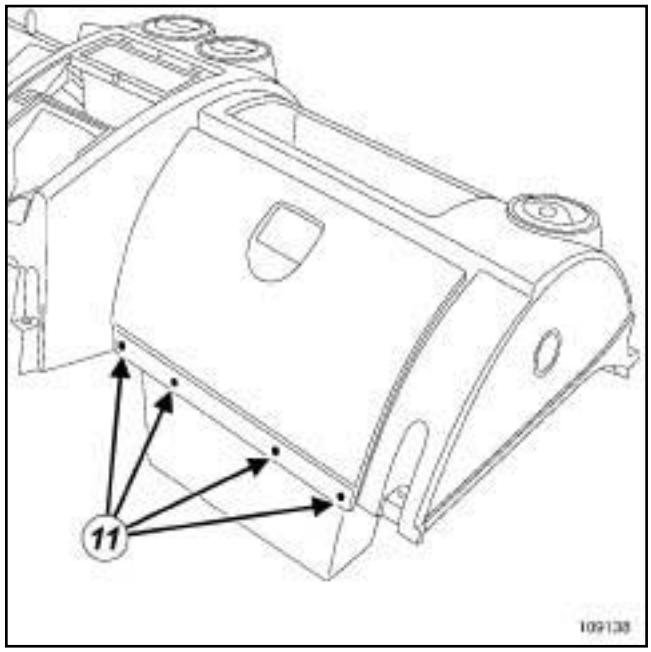

109138

❑ Remove the rivets (**11**) .

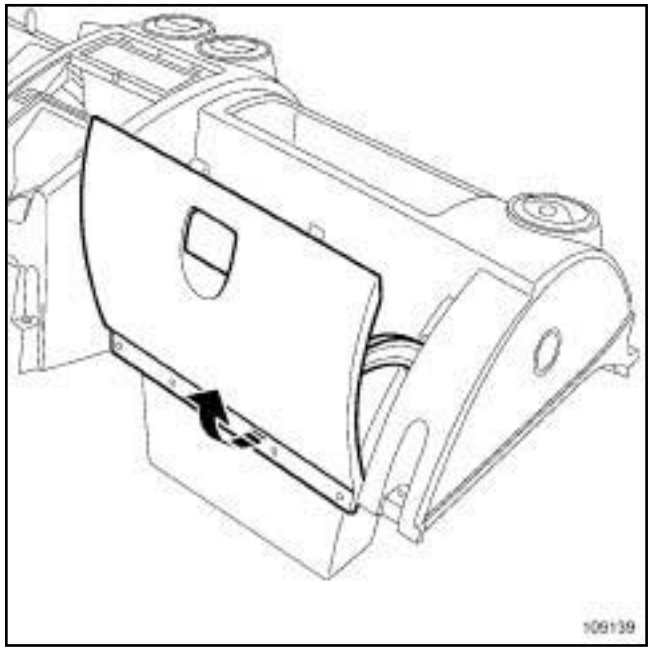

109139

❑ Remove the glove box lid.

REFITTING

I - REFITTING PREPARATION OPERATION

❑ Ensure that the wiring is in good condition.

II - REFITTING OPERATION FOR PART CONCERNED

❑ Refit:

- the glovebox cover,
- the rivets,
- the right-hand side trim,
- the right-hand side trim bolts,
- the passenger front airbag (depending on equipment level) (see **Passenger's frontal airbag: Removal - Refitting**) (88C, Airbags and pretensioners),
- the dashboard (partially) (this operation requires two people).

❑ Connect the connector ***(8)*** .

❑ Refit:

- the diagnostic socket,
- the dashboard (this operation requires two people),
- the dashboard bolts.

❑ Replace the control panel on the dashboard.

❑ Clip the covers ***(3)*** onto both sides of the dashboard.

III - FINAL OPERATION

❑ Connect the central trim connectors.

❑ Fit the central trim assembly.

❑ Clip on the central trim.

❑ Refit:

- the radio (see **Radio: Removal - Refitting**) (86A, Radio),
- the centre console (see **57A**, **Interior equipment**, **Centre console: Removal - Refitting**, page **57A-10**) ,
- the instrument panel (see **Instrument panel: Removal - Refitting**) (83A, Instrument panel),
- the steering column switch assembly (see **Steering column switch assembly: Removal - Refitting**) (84A, Control - Signals),
- the steering wheel (see **Steering wheel: Removal - Refitting**) (36A, Steering assembly),
- the driver's front airbag (see **Driver's frontal airbag: Removal - Refitting**) (88C, Airbags and pretensioners),
- the windscreen pillar trims (see **Windscreen pillar trim: Removal - Refitting**) (71A, Body internal trim).

❑ Connect the battery (see **Battery: Removal - Refitting**) (80A, Battery).

> **IMPORTANT**
> To avoid a fault with or even triggering of pyrotechnic components (airbags or pretensioners), check the airbag computer using the diagnostic tool.

❑ Unlock the airbag computer using the **Diagnostic tool** (see **Fault finding - Replacement of components**) (88C, Airbags and pretensioners).

STRIPPING

STRIPPING OPERATION

❏ Remove:

- the dashboard trims on the driver's side (see **Instrument panel: Removal - Refitting**) (83A, Instrument panel),
- the dashboard air vents (see **57A**, **Interior equipment**, **Dashboard air vent: Removal - Refitting**, page **57A-7**) ,
- the glovebox cover (see **57A**, **Interior equipment**, **Glovebox cover: Removal - Refitting**, page **57A-9**) ,
- the central trim (see **57A**, **Interior equipment**, **Dashboard: Removal - Refitting**, page **57A-1**) .

> Note:
>
> When removing the dashboard trim on the passenger side, it is necessary to remove the dashboard.

REBUILDING

❏ Proceed in the reverse order to removal.

REMOVAL

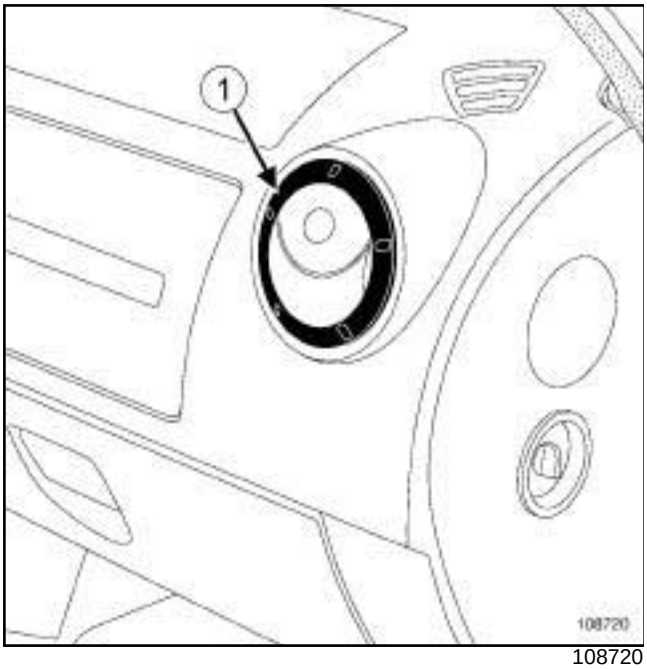

108720

❑ Using a flat screwdriver, remove the air vent surround (**1**) .

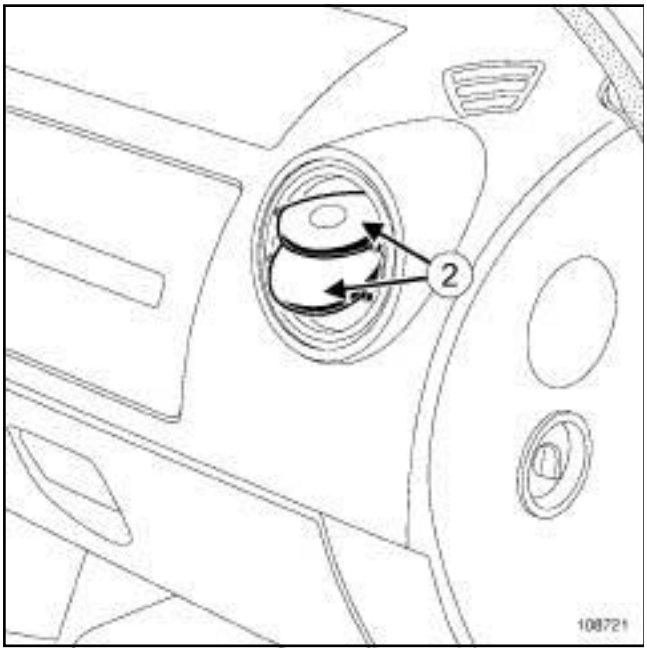

108721

❑ Unclip grilles (**2**) .

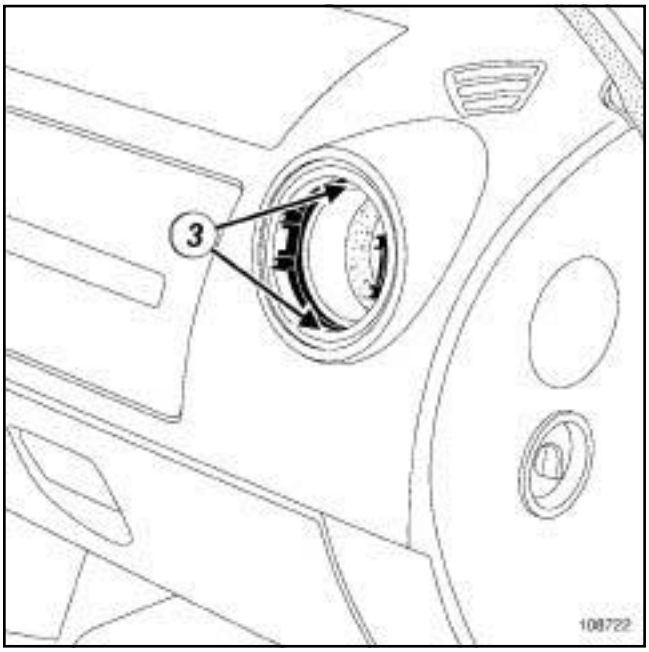

108722

❑ Unclip inner band (**3**) .

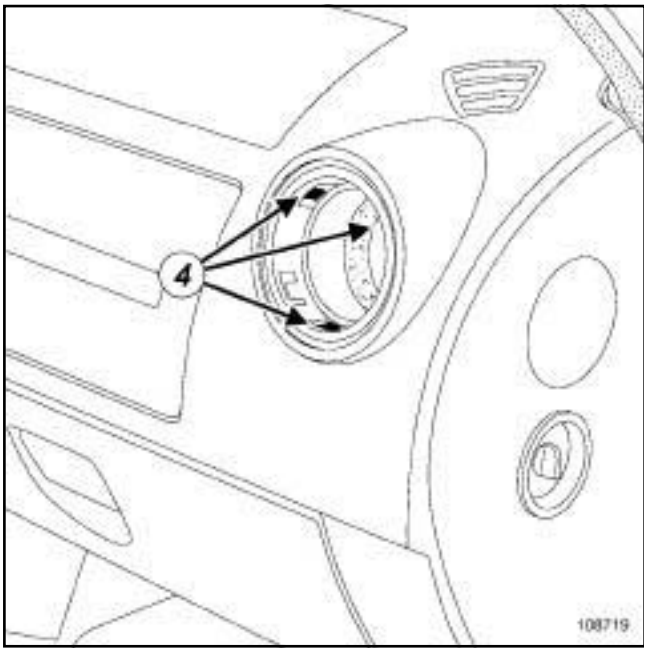

108719

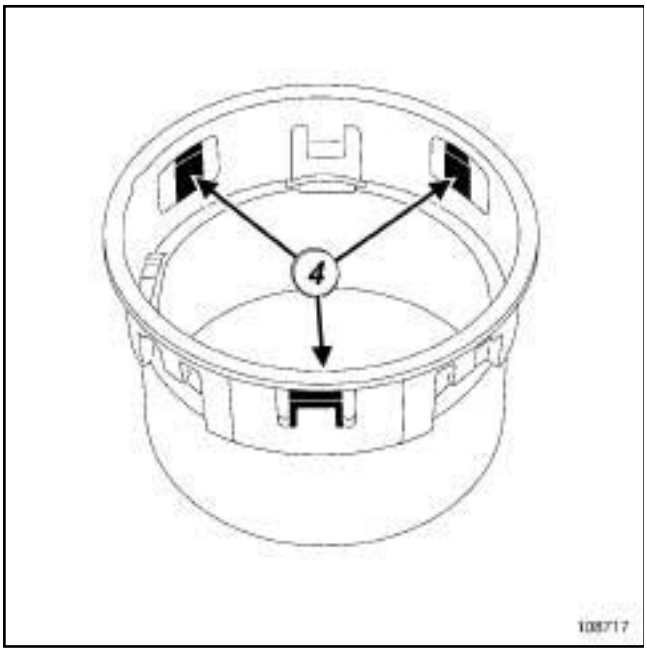

108717

❏ Unclip clips (**4**) .

❏ Withdraw the vent.

REFITTING

❏ Proceed in the reverse order to removal.

REMOVAL

OPERATION FOR REMOVAL OF PART CONCERNED

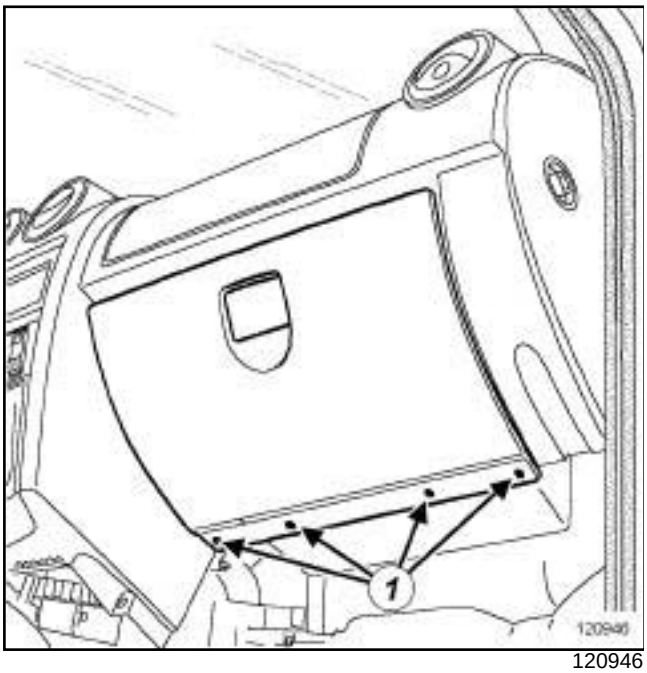

120946

❑ Remove the rivets (**1**) .

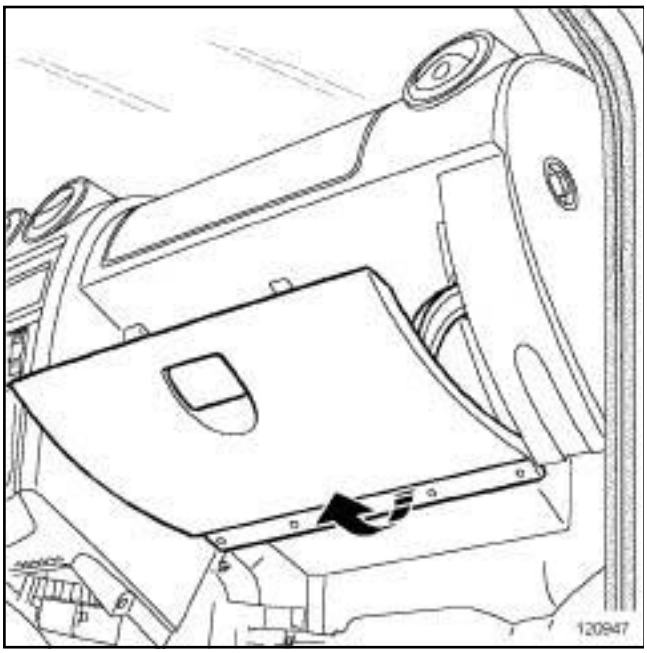

120947

❑ Remove the glove box lid.

REFITTING

REFITTING OPERATION FOR PART CONCERNED

❑ Fit the glove box cover.

❑ Position the glove box cover with rivets.

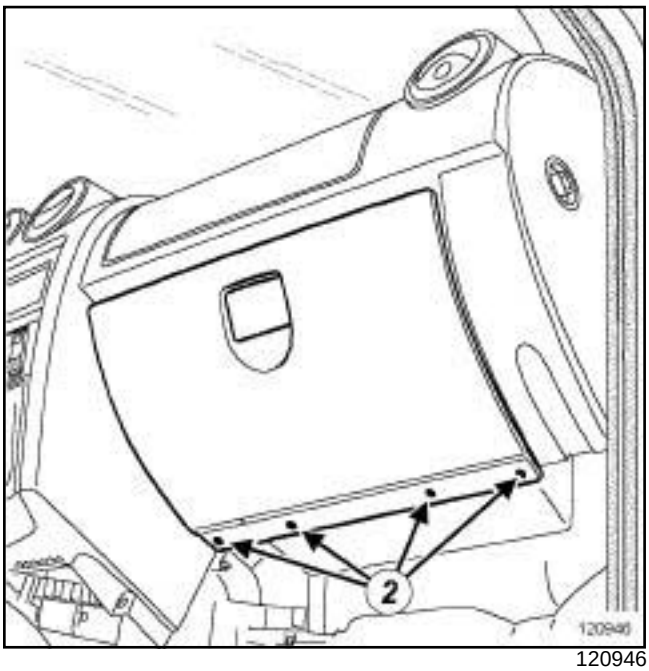

120946

❑ Refit the rivets (**2**) .

Special tooling required	
Car. 1363	Set of trim removal levers.

REMOVAL

REMOVAL OPERATION

2 ELECTRICALLY ADJUSTABLE EXTERNAL REAR VIEW MIRRORS

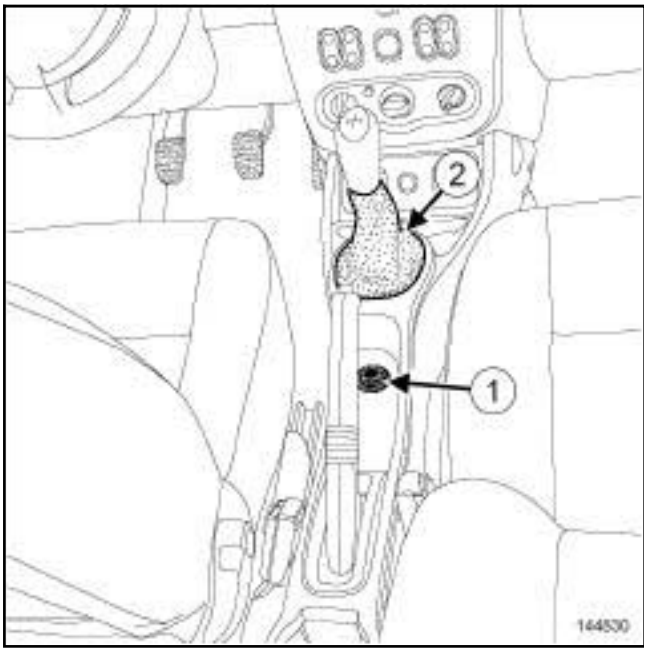

144830

❑ Remove the adjustment control for the door mirrors (**1**) .

❑ Disconnect the adjustment control connector for the door mirrors.

❑ Unclip the front section of the gear lever gaiter ***(2)*** using the tool **(Car. 1363)**.

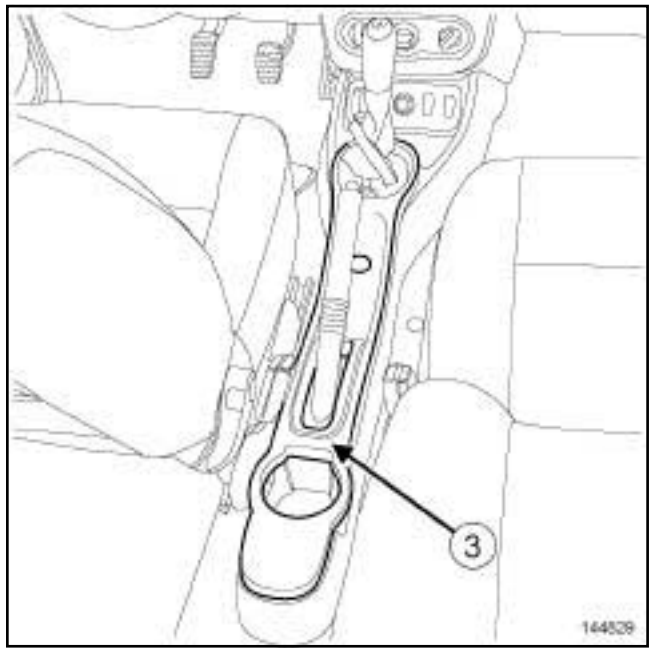

144829

❑ Unclip the upper section of the centre console (**3**) .

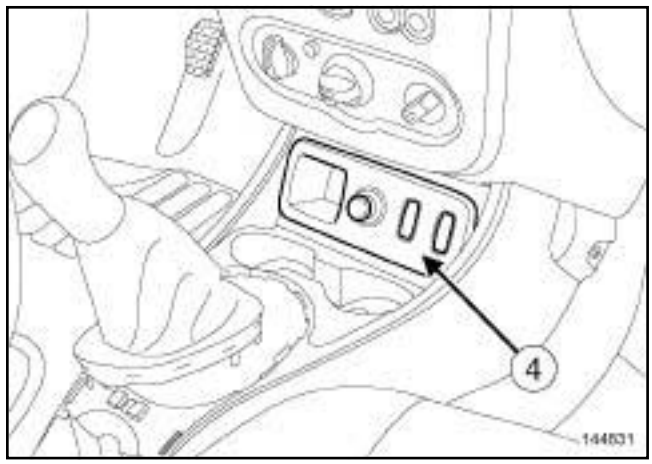

144831

❑ Unclip the switch mounting front panel (**4**) .

WITH SMOKING ACCESSORIES

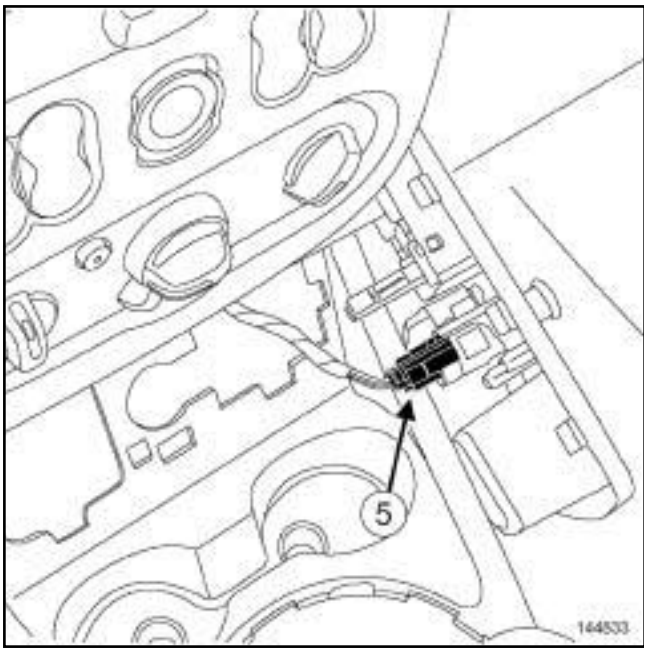

144833

❑ Disconnect the cigarette lighter connector (**5**) .

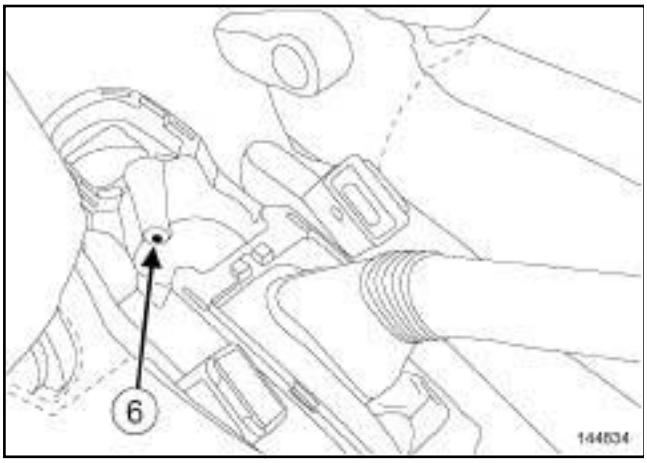

144834

❑ Remove the rear bolt of the centre console (**6**) .

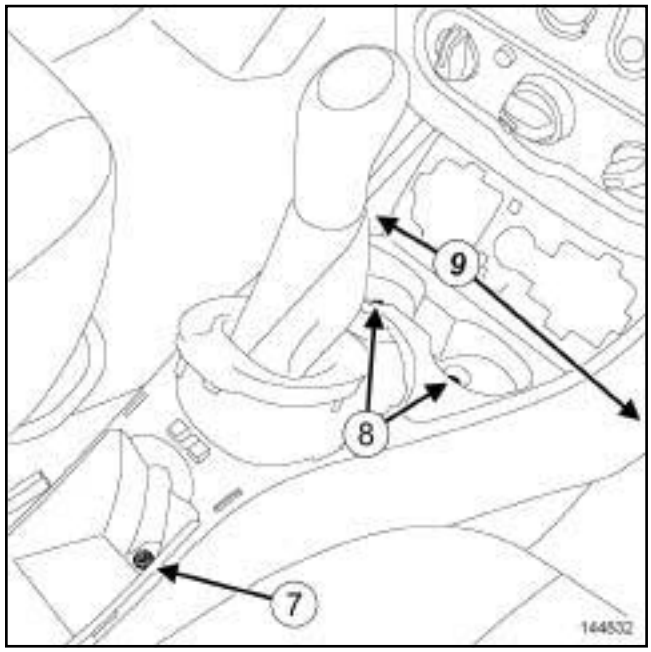

144832

❑ Remove:

- the centre console nut (**7**) ,
- the central bolts of the centre console (**8**) ,
- the side bolts of the centre console (**9**) ,
- the lower section of the centre console.

REFITTING

REFITTING OPERATION

❑ Proceed in the reverse order to removal.

> Note:
>
> Before clipping on the gear lever gaiter, position the rear section of the gear lever gaiter on the centre console.

REMOVAL

REMOVAL OPERATION

108659

❑ Remove interior rear view mirror (**1**) .

REFITTING

REFITTING OPERATION

❑ Proceed in the reverse order to removal.

REMOVAL

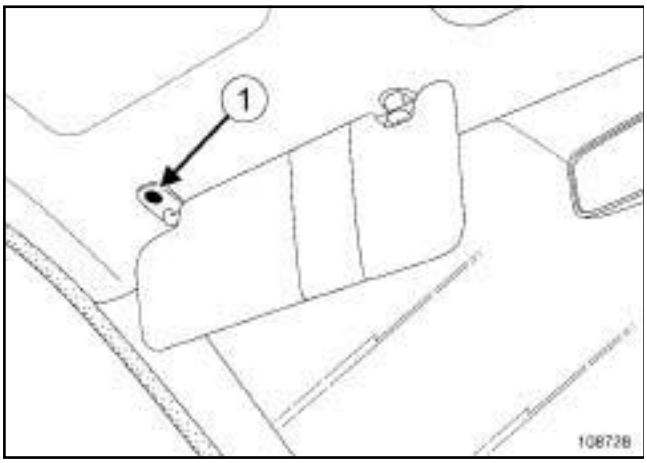

108728

❑ Remove the bolt (**1**) .

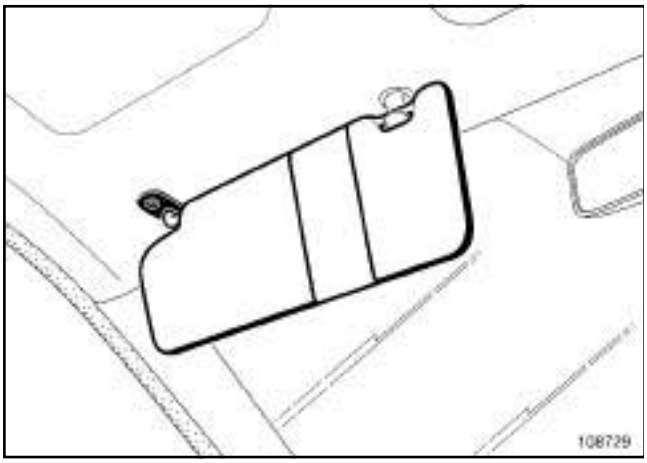

108729

❑ Remove the sun visor.

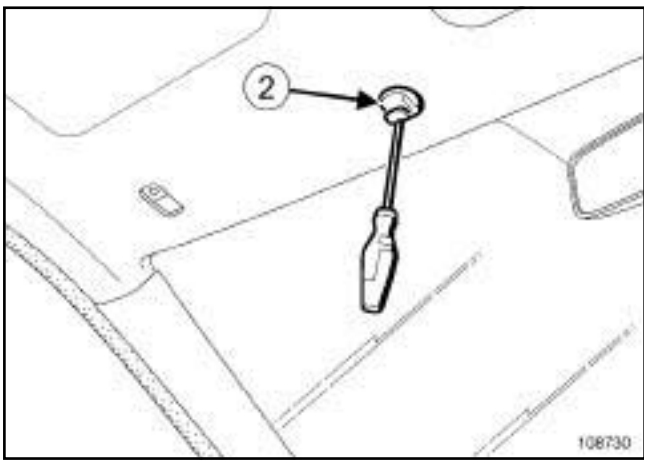

108730

❑ Remove sun visor bracket (**2**) .

REFITTING

❑ Proceed in the reverse order to removal.

REMOVAL

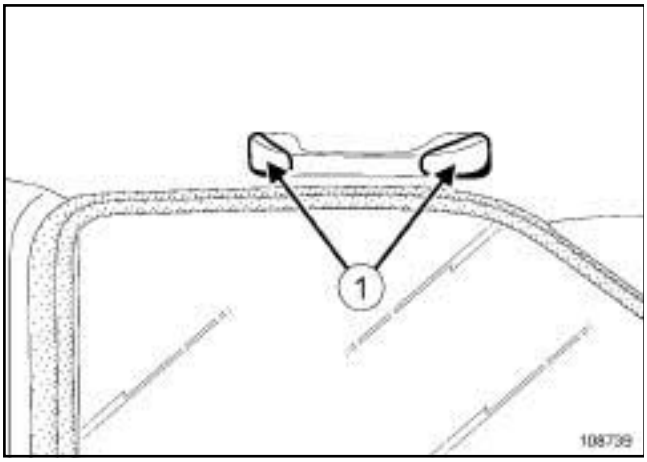

108739

❑ Unclip covers (**1**) .

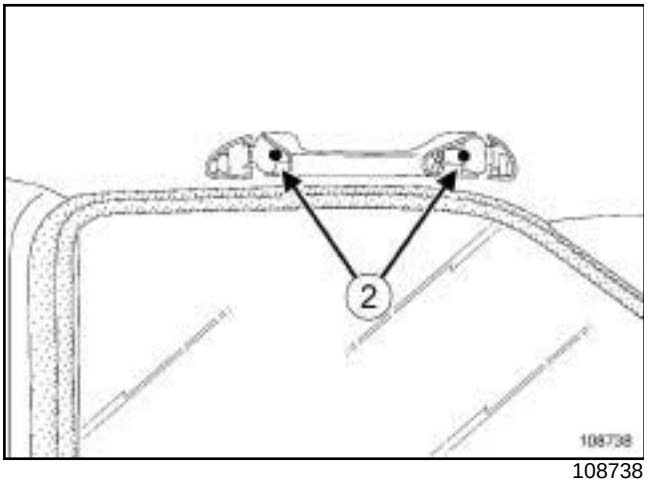

108738

❑ Remove the bolts (**2**) .

❑ Remove the grab handle.

REFITTING

❑ Proceed in the reverse order to removal.

RENAULT

6 Air conditioning

61A HEATING

62A AIR CONDITIONING

X79

NOVEMBER 2009 **EDITION ANGLAISE**

"The repair procedures given by the manufacturer in this document are based on the technical specifications current when it was prepared.

The procedures may be modified as a result of changes introduced by the manufacturer in the production of the various component units and accessories from which the vehicles are constructed".

All rights reserved by Renault.

Copying or translating, in part or in full, of this document or use of the service part reference numbering system is forbidden without the prior written authority of Renault.

© Renault s.a.s 2007

DUSTER - Chapitre 6

Contents

Pages

61A HEATING

Heating: List and location of components 61A-1

Cabin filter: Removal - Refitting 61A-8

Front air distribution duct: Removal - Refitting 61A-9

Rear air distribution duct: Removal - Refitting 61A-10

Recirculation control cable: Removal - Refitting 61A-11

Air distribution cable: Removal - Refitting 61A-13

Air mixing cable: Removal - Refitting 61A-15

Distribution unit: Removal - Refitting 61A-17

Heater matrix: Removal - Refitting 61A-21

Fan assembly: Removal - Refitting 61A-24

Heating resistor relays: Removal - Refitting 61A-25

Heating resistors: Removal - Refitting 61A-26

Passenger compartment fan assembly control unit: Removal - Refitting 61A-28

Control panel: Removal - Refitting 61A-29

62A AIR CONDITIONING

Air conditioning: List and location of components 62A-1

Air conditioning: Parts and consumables for the repair 62A-9

Condenser: Removal - Refitting 62A-10

Compressor: Removal - Refitting 62A-12

Expansion valve: Removal - Refitting 62A-16

Refrigerant pipe seal: Removal - Refitting 62A-18

Refrigerant circuit pipe: Removal - Refitting 62A-21

Pressure sensor: Removal - Refitting 62A-23

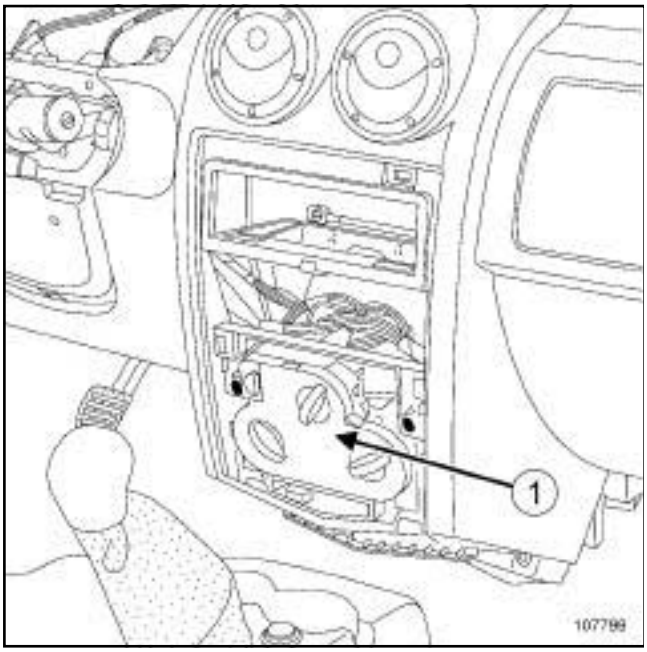

107799

VALEO distribution unit

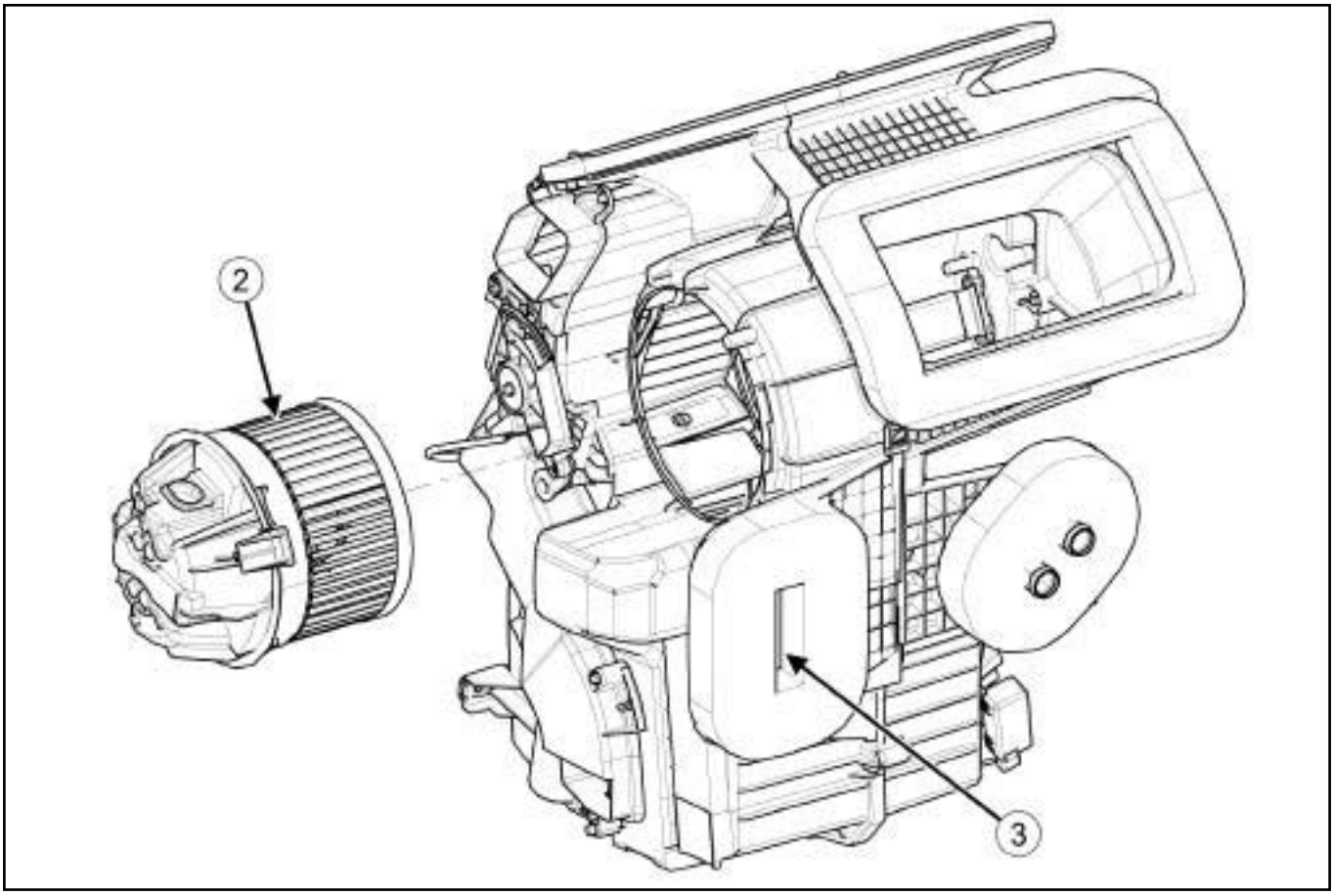

143994

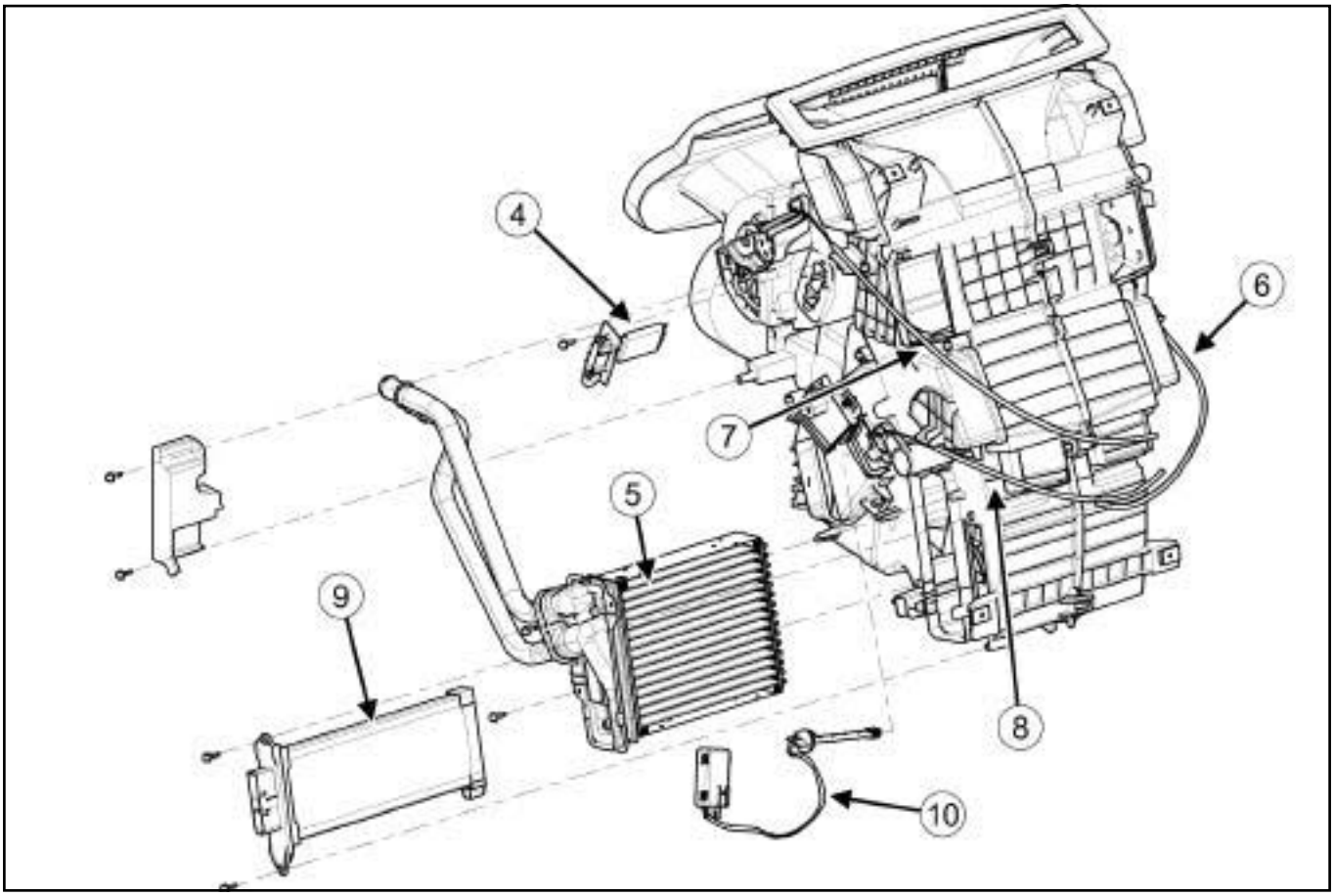

143997

BEHR distribution unit

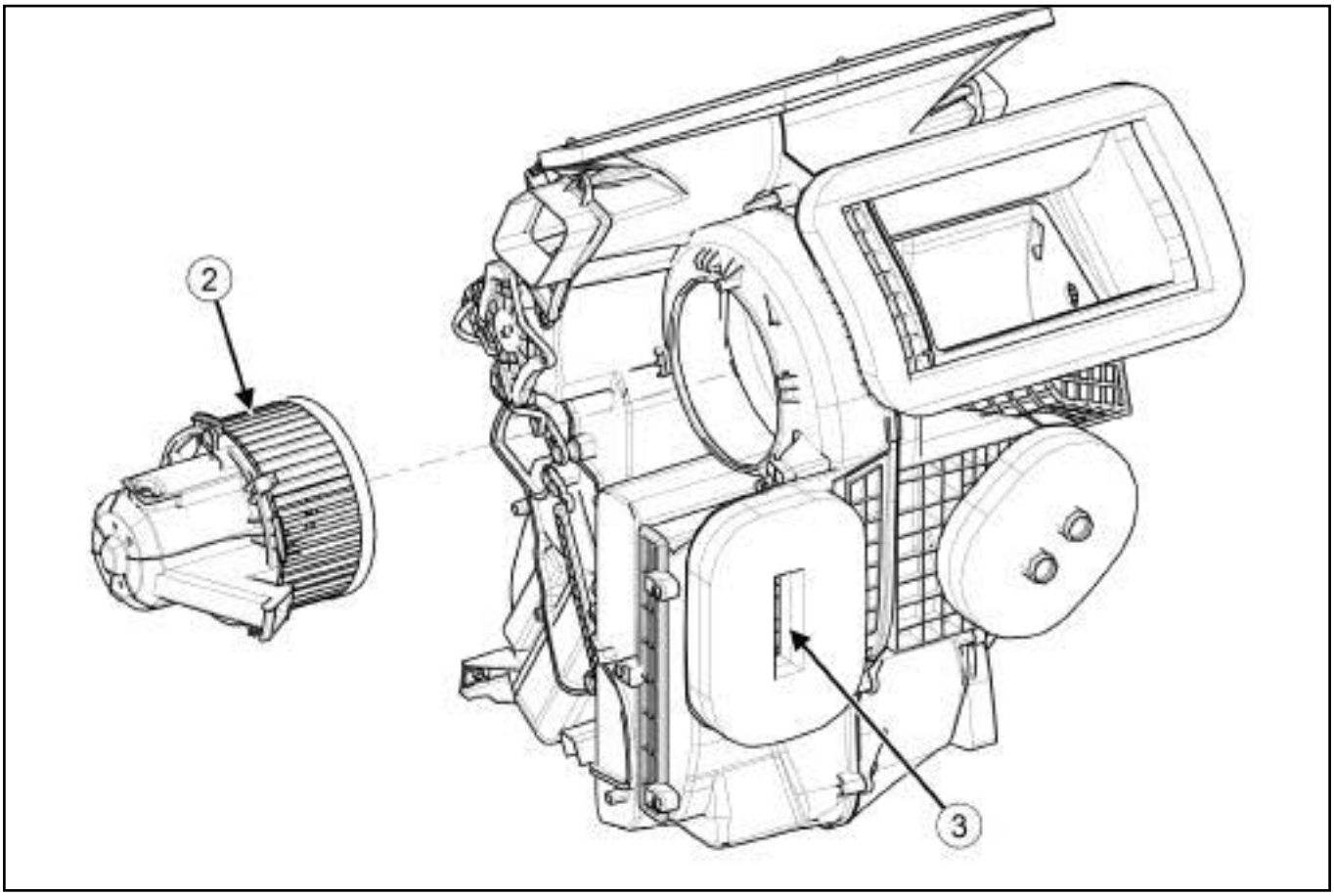

143995

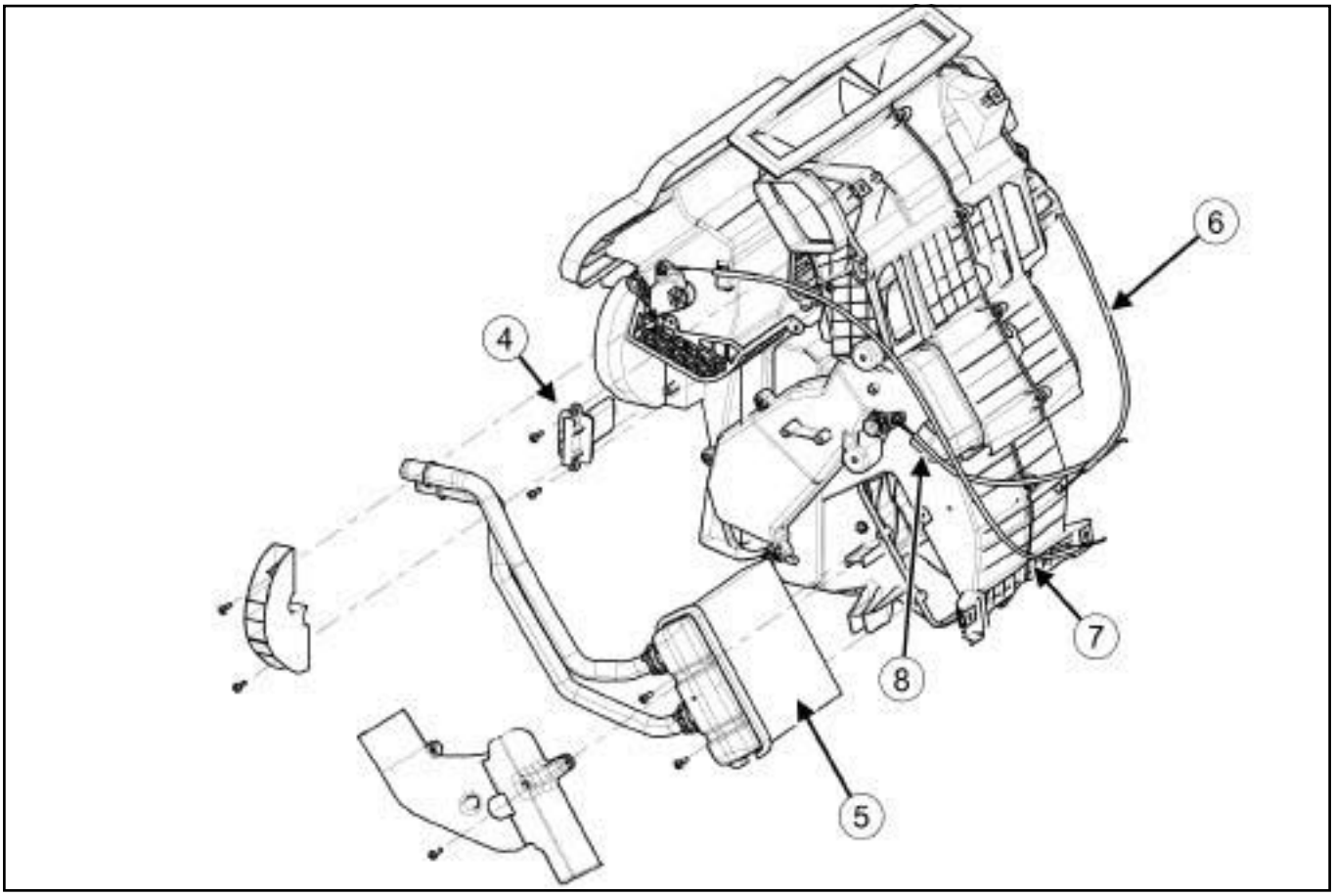

143998

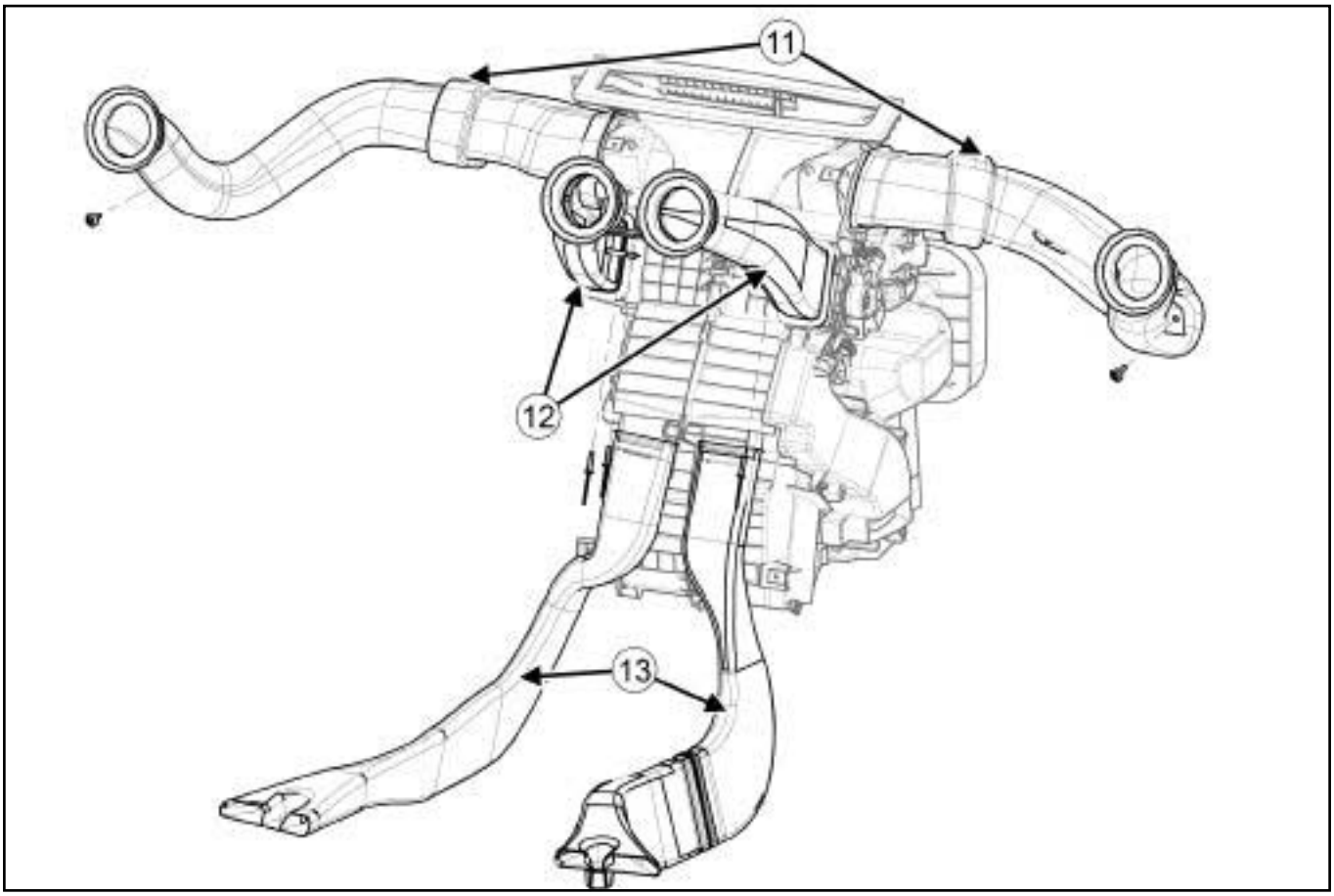

143996

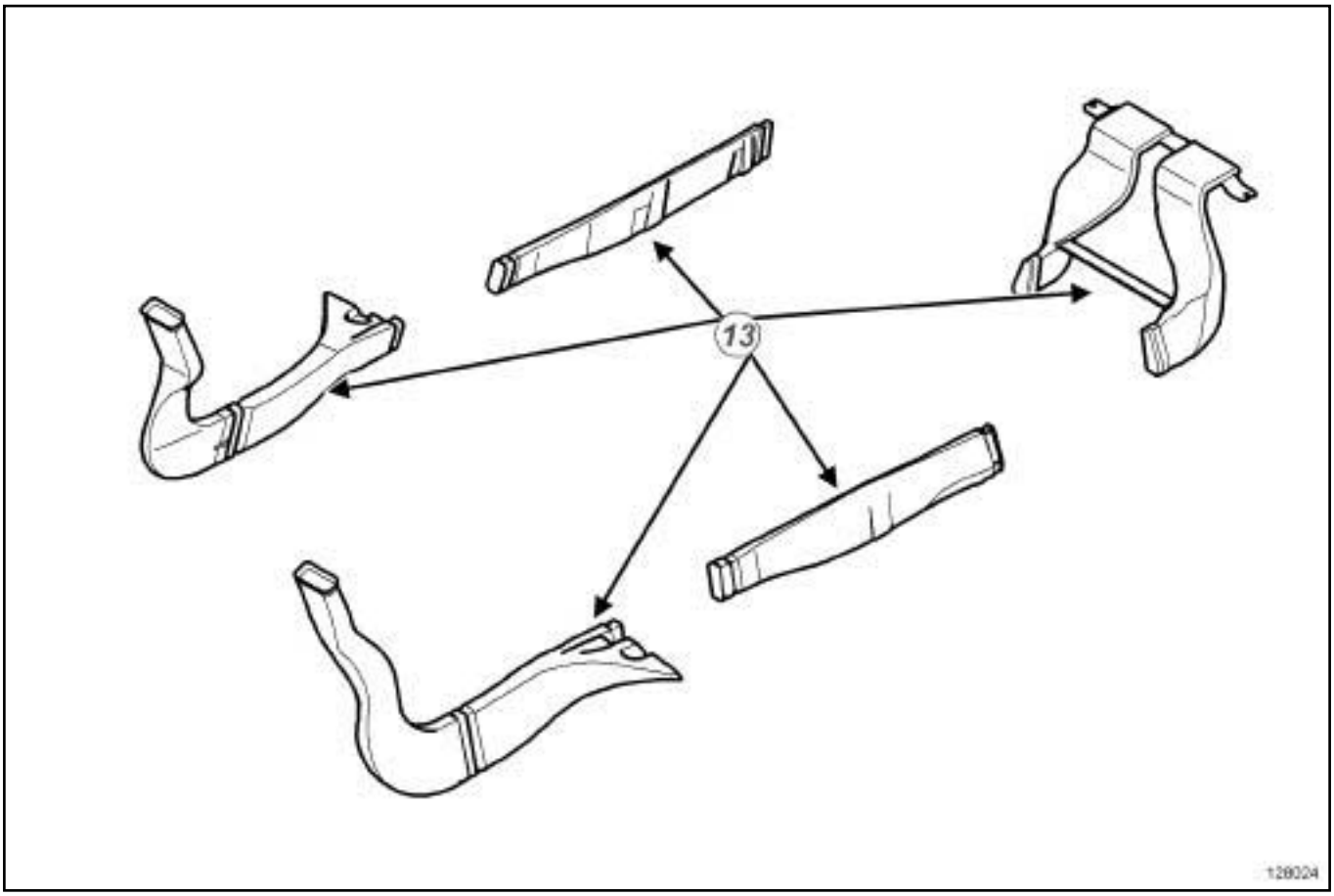

128024

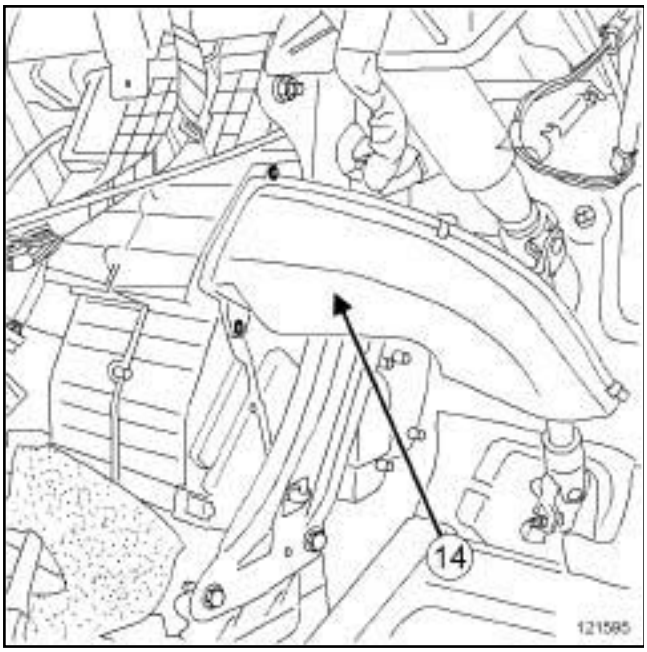

121595

1	Control panel	(see **61A**, **Heating**, **Control panel: Removal - Refitting**, page **61A-29**)
2	Passenger compartment fan assembly	(see **61A**, **Heating**, **Fan assembly: Removal - Refitting**, page **61A-24**)

3	Expansion valve	(see **62A**, **Air conditioning**, **Expansion valve: Removal - Refitting**, page **62A-16**)
4	Passenger compartment fan assembly control unit	(see **61A**, **Heating**, **Passenger compartment fan assembly control unit: Removal - Refitting**, page **61A-28**)
5	Heater matrix	(see **61A**, **Heating**, **Heater matrix: Removal - Refitting**, page **61A-21**)
6	Air distribution cable	(see **61A**, **Heating**, **Air distribution cable: Removal - Refitting**, page **61A-13**)
7	Recirculation control cable	(see **61A**, **Heating**, **Recirculation control cable: Removal - Refitting**, page **61A-11**)
8	Air mixing cable	(see **61A**, **Heating**, **Air mixing cable: Removal - Refitting**, page **61A-15**)
9	Heating resistors (VALEO type)	(see **61A**, **Heating**, **Heating resistors: Removal - Refitting**, page **61A-26**)
10	Evaporator sensor (VALEO type)	(see **Evaporator sensor: Removal - Refitting**)
11	Front side air distribution duct	(see **61A**, **Heating**, **Front air distribution duct: Removal - Refitting**, page **61A-9**)
12	Front central air distribution duct	
13	C-pillar air distribution duct	(see **61A**, **Heating**, **Rear air distribution duct: Removal - Refitting**, page **61A-10**)
14	A-pillar air distribution duct	(see **Front footwell air distribution duct: Removal - Refitting**)

REMOVAL

OPERATION FOR REMOVAL OF PART CONCERNED

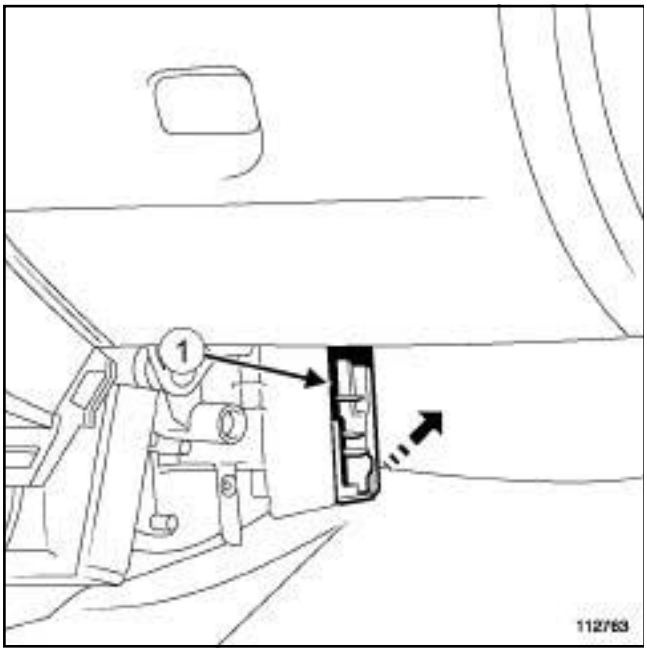

112763

❑ Unclip the passenger compartment filter (**1**) .

> Note:
>
> Foreign bodies (leaves, insects etc.) are likely to accumulate in the passenger compartment filter.
>
> Remove the cabin filter with care so as to prevent foreign bodies getting into the evaporator.

❑ Remove the cabin filter.

REFITTING

I - REFITTING PREPARATIONS OPERATION

❑ Check for foreign bodies in the cabin filter housing, and clean thoroughly if necessary.

II - REFITTING OPERATION FOR PART CONCERNED

❑ Refit the cabin filter.

❑ Clip on the cabin filter.

REMOVAL

I - REMOVAL PREPARATION OPERATION

❏ Lock the airbag computer (see **Fault finding - Replacement of components**) (88C, Airbags and pretensioners).

❏ Disconnect the battery (see **Battery: Removal - Refitting**) (80A, Battery).

❏ Remove:

- the driver's frontal airbag (see **Driver's frontal airbag: Removal - Refitting**) (88C, Airbags and pretensioners),
- the steering wheel (see **Steering wheel: Removal - Refitting**) (36A, Steering assembly),
- the steering column switch assembly (see **Steering column switch assembly: Removal - Refitting**) (84A, Control - Signals),
- the instrument panel (see **Instrument panel: Removal - Refitting**) (83A, Instrument panel),
- the storage compartment,
- the radio (see **Radio: Removal - Refitting**) (86A, Radio),
- the dashboard (see **Dashboard: Removal - Refitting**) (57A, Interior equipment).

II - REMOVAL OPERATION

1 - Front right-hand air distribution duct

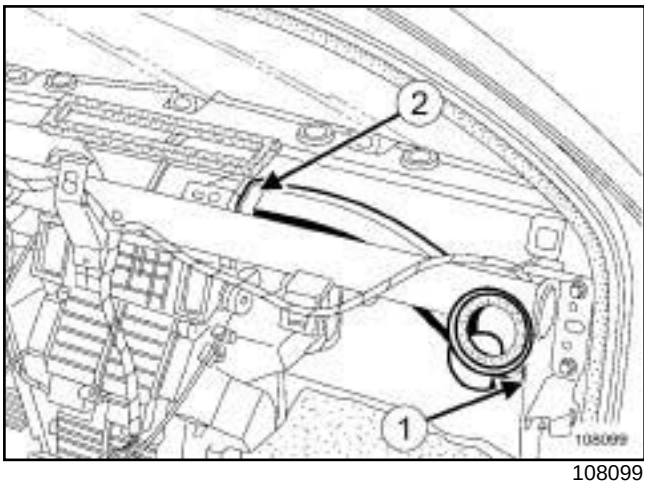

108099

❏ Remove:

- the aerial cable clip on the front right-hand air distribution duct,
- the front right-hand air distribution duct bolt (**1**) .

❏ Pull out the front right-hand air distribution duct at (**2**) .

2 - Front left-hand air distribution duct

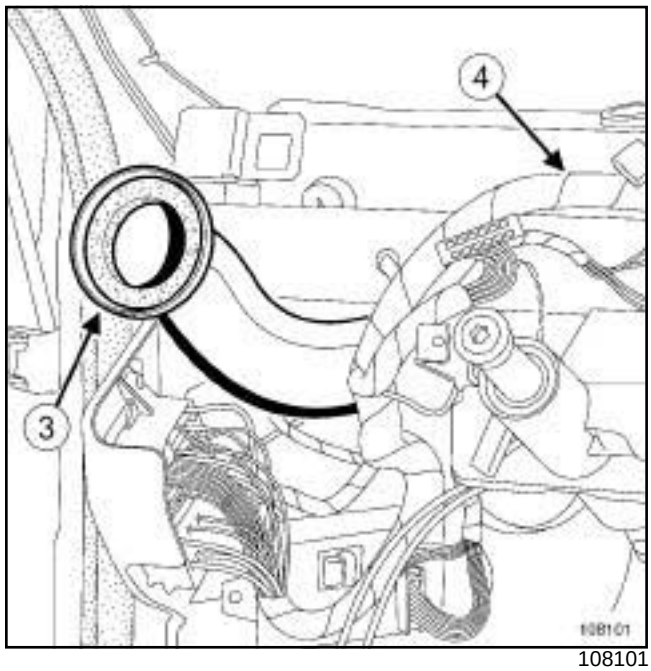

108101

❏ Remove the front left-hand air distribution duct bolt (**3**) .

❏ Pull out the front left-hand air distribution duct at (**4**) .

REFITTING

❏ Proceed in the reverse order to removal.

❏ Unlock the airbag computer (see **Fault finding - Replacement of components**) (88C, Airbags and pretensioners).

REAR SEATS AIR DUCT

REMOVAL

I - REMOVAL PREPARATION OPERATION

❑ Remove:

- the central console (see **Centre console: Removal - Refitting**) (57A, Interior equipment),
- the front seats (see **Front seat assembly: Exploded view**) (75A, Front seat frames and mechanisms),
- the floor carpet partially (see **Floor trim assembly: Exploded view**) (71A, Body internal trim).

II - REMOVAL OPERATION

1 - Rear left-hand air distribution duct

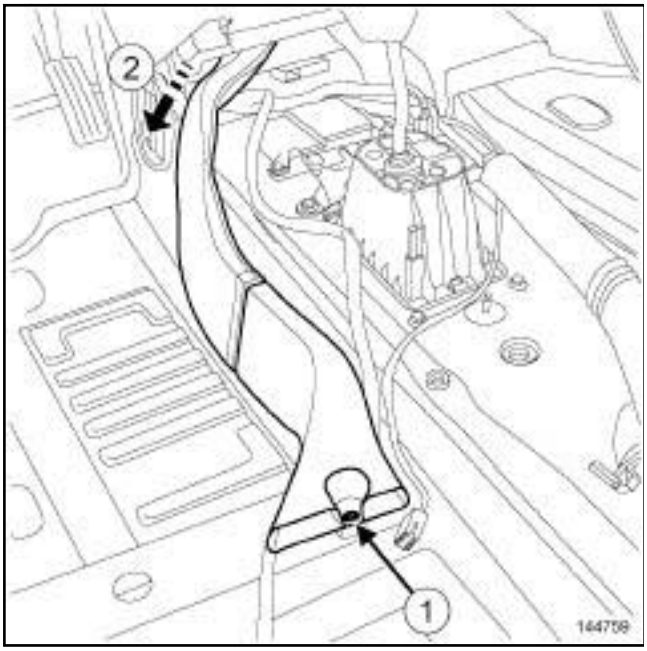

144759

❑ Remove the clip (**1**) using an unclipping tool.

❑ Remove the rear left-hand air distribution duct at (**2**) .

2 - Rear right-hand air distribution duct

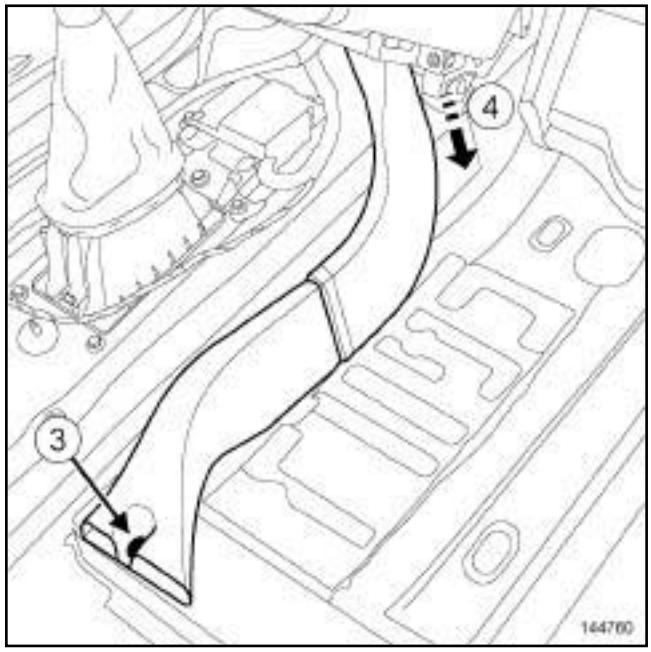

144760

❑ Remove the clip (**3**) using an unclipping tool.

❑ Remove the rear right-hand air distribution duct at (**4**) .

REFITTING

REFITTING OPERATION

❑ Proceed in the reverse order to removal.

AIR CONDITIONING or STANDARD HEATING RECIRCULATION

REMOVAL

I - REMOVAL PREPARATION OPERATION

- ❑ Lock the airbag computer (see **Fault finding - Replacement of components**) (88C, Airbags and pretensioners).
- ❑ Disconnect the battery (see **Battery: Removal - Refitting**) (80A, Battery).
- ❑ Remove:
  - the driver's front airbag (see **Driver's frontal airbag: Removal - Refitting**) (88C, Airbags and pretensioners),
  - the steering wheel (see **Steering wheel: Removal - Refitting**) (36A, Steering assembly),
  - the steering column switch assembly (see **Steering column switch assembly: Removal - Refitting**) (84A, Control - Signals),
  - the instrument panel (see **Instrument panel: Removal - Refitting**) (83A, Instrument panel)
  - the storage compartment,
  - the radio (see **Radio: Removal - Refitting**) (86A, Radio),
  - the dashboard (see **Dashboard: Removal - Refitting**) (57A, Interior equipment).
- ❑ Turn the air recirculation switch to the air recirculation position.
- ❑ Disconnect the air conditioning control panel connector.

II - REMOVAL OPERATION

H79

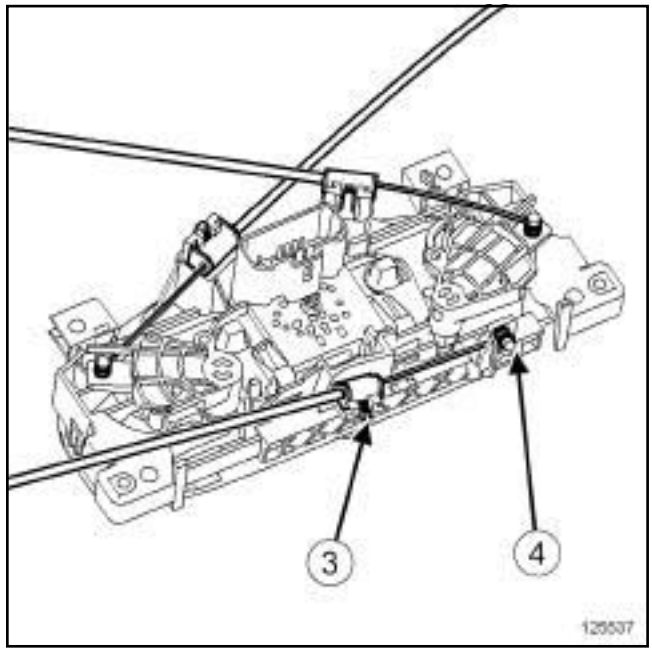

125537

- ❑ Remove the sheath stop by moving the tab (**3**) to one side.
- ❑ Extract the recirculation control cable (**4**) from the control panel.

AIR CONDITIONING or STANDARD HEATING RECIRCULATION

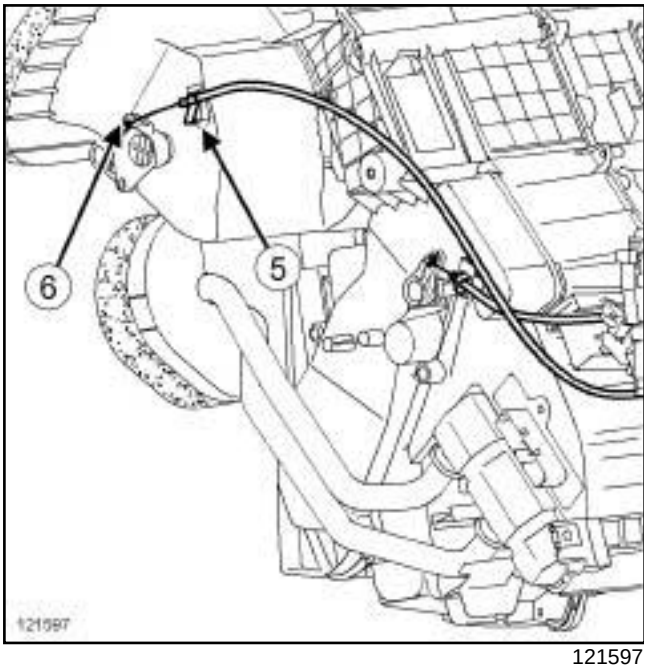

121597

- ❑ Unclip the cable sleeve stop (**5**) from the distribution unit.
- ❑ Extract the end of the air recirculation control cable (**6**) .
- ❑ Remove the air recirculation control cable.

REFITTING

- ❑ Proceed in the reverse order to removal.
- ❑ Check that the air recirculation flap is in the recirculation position.
- ❑ Check that the recirculation control can move along its whole stroke.
- ❑ Unlock the airbag computer (see **Fault finding - Replacement of components**) (88C, Airbags and pretensioners).

AIR CONDITIONING or STANDARD HEATING RECIRCULATION

REMOVAL

I - REMOVAL PREPARATION OPERATION

- ❑ Lock the airbag computer (see **Fault finding - Replacement of components**) (88C, Airbags and pretensioners).
- ❑ Disconnect the battery (see **Battery: Removal - Refitting**) (80A, Battery).
- ❑ Turn the air distribution control to the air vent position on the dashboard,
- ❑ Remove:
  - the driver's front airbag (see **Driver's frontal airbag: Removal - Refitting**) (88C, Airbags and pretensioners),
  - the steering wheel (see **Steering wheel: Removal - Refitting**) (36A, Steering assembly),
  - the steering column switch assembly (see **Steering column switch assembly: Removal - Refitting**) (84A, Control - Signals),
  - the instrument panel (see **Instrument panel: Removal - Refitting**) (83A, Instrument panel),
  - the storage compartment,
  - the radio (see **Radio: Removal - Refitting**) (86A, Radio),
  - the dashboard (see **Dashboard: Removal - Refitting**) (57A, Interior equipment).
- ❑ Disconnect the climate control panel connector .

II - REMOVAL OPERATION

H79

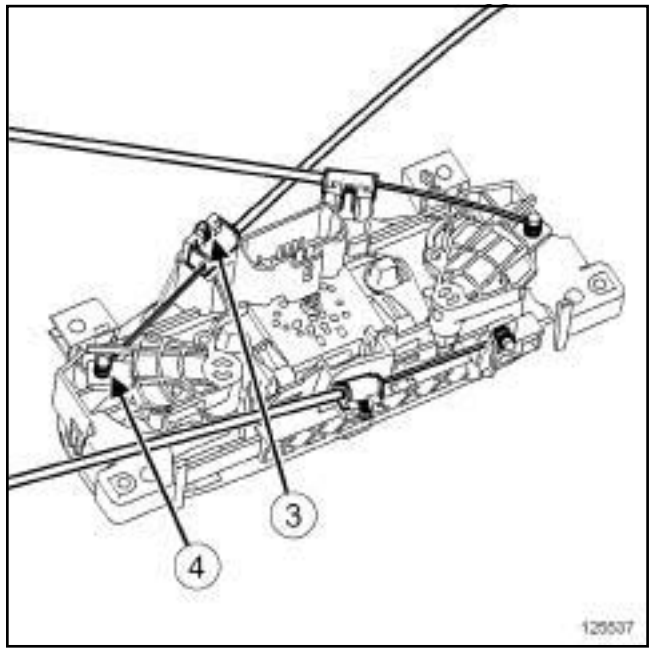

125537

- ❑ Remove the sheath stop by moving the tab (**3**) to one side.
- ❑ Extract the air distribution cable (**4**) from the air conditioning control panel.

AIR CONDITIONING or STANDARD HEATING RECIRCULATION

LEFT-HAND DRIVE

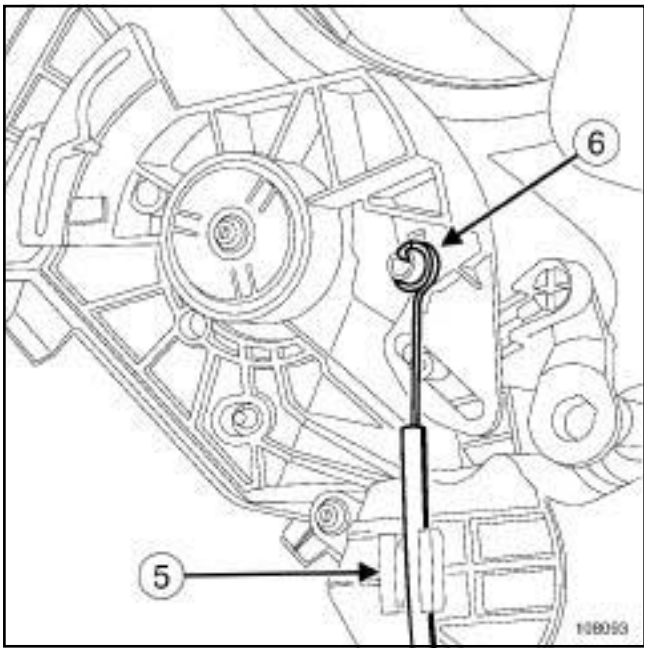

108093

- ❑ Unclip the cable sleeve stop (**5**) from the distribution unit.
- ❑ Extract the end of the air distribution cable (**6**) .

- ❑ Remove the air distribution cable.

REFITTING

- ❑ Proceed in the reverse order to removal.
- ❑ Check that the air distribution control can move along its whole stroke.
- ❑ Unlock the airbag computer (see **Fault finding - Replacement of components**) (88C, Airbags and pretensioners).

AIR CONDITIONING or STANDARD HEATING RECIRCULATION

REMOVAL

I - REMOVAL PREPARATION OPERATION

❑ Lock the airbag computer (see **Fault finding - Replacement of components**) (88C, Airbags and pretensioners).

❑ Disconnect the battery (see **Battery: Removal - Refitting**) (80A, Battery).

❑ Turn the heating and air conditioning mixing control to the hottest position.

❑ Remove:

- the driver's front airbag (see **Driver's frontal airbag: Removal - Refitting**) (88C, Airbags and pretensioners),
- the steering wheel (see **Steering wheel: Removal - Refitting**) (36A, Steering assembly),
- the steering column switch assembly (see **Steering column switch assembly: Removal - Refitting**) (84A, Control - Signals),
- the instrument panel (see **Instrument panel: Removal - Refitting**) (83A, Instrument panel),
- the storage compartment,
- the radio (see **Radio: Removal - Refitting**) (86A, Radio),
- the dashboard (see **Dashboard: Removal - Refitting**) (57A, Interior equipment).

❑ Disconnect the climate control panel connector .

II - REMOVAL OPERATION

H79

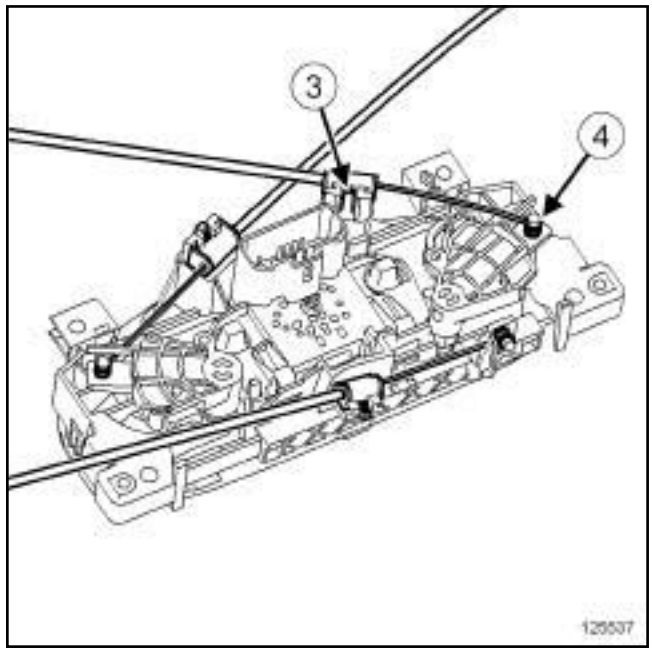

125537

❑ Remove:

- the sheath stop by moving the tab (**3**) to one side,
- the air mixing cable (**4**) from the control panel.

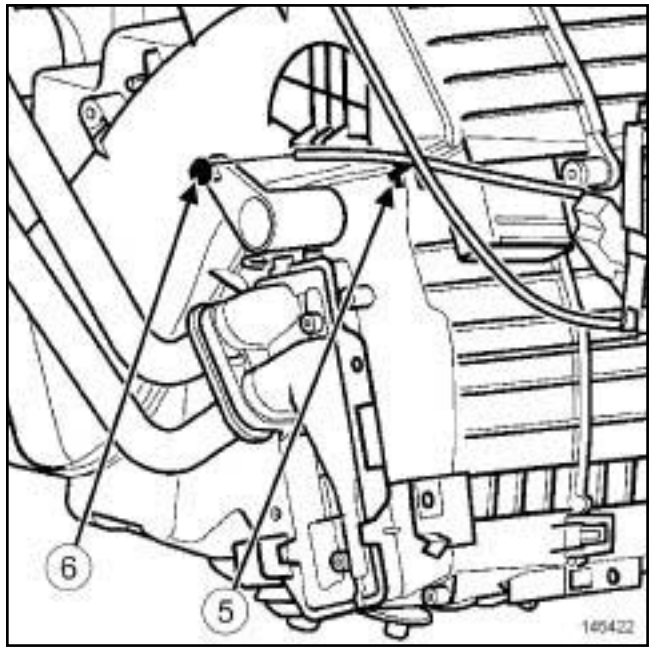

145422

❑ Unclip the distribution unit cable sleeve stop (**5**) .

❑ Extract the end of the air mixing cable (**6**) .

AIR CONDITIONING or STANDARD HEATING RECIRCULATION

- Remove the air mixing cable.

REFITTING

- Proceed in the reverse order to removal.
- Check that the air mixing control can move along its whole stroke.
- Unlock the airbag computer (see **Fault finding - Replacement of components**) (88C, Airbags and pretensioners).

Special tooling required	
Ms. 583	Pipe clamps.

Equipment required
refrigerant charging station

REMOVAL

I - REMOVAL PREPARATION OPERATION

❑ Lock the airbag computer (see **Fault finding - Replacement of components**) (88C, Airbags and pretensioners).

❑ Disconnect the battery (see **Battery: Removal - Refitting**) (80A, Battery).

AIR CONDITIONING

❑

IMPORTANT
Consult the safety and cleanliness advice and operation recommendations before carrying out any repair (see **Air conditioning: Precautions for the repair**) .

Note:
Use blanking plugs for the fuel circuits with part numbers **77 01 208 229** or **77 01 476 857** to plug any openings exposed to the open air. They must be clean. Do not use any which have already been used to plug a fuel circuit.

❑ Drain the coolant circuit using the **refrigerant charging station** (see **Refrigerant circuit: Draining - Filling**) .

❑ Move aside the engine compartment bulkhead soundproofing.

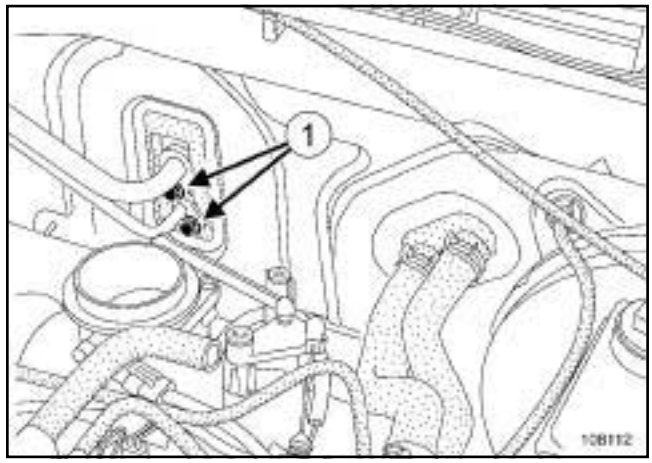

108112

❑ Remove the bolts (**1**) from the pipe unions on the expansion valve.

WARNING
In order to avoid any refrigerant leaks, do not damage (deform, twist, etc.) the pipe.

❑ Disconnect the expansion valve pipes.

WARNING
To prevent moisture from entering the system, place plugs on the cold loop components which are open to the air.

❑ Fit plugs into the openings.

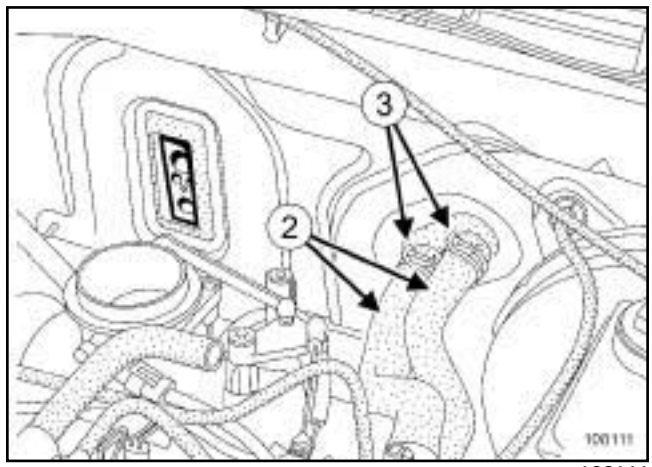

108111

❑ Fit hose clamps **(Ms. 583)** at (**2**) .

❑ Remove the clips (**3**) from the heater hoses.

❑ Disconnect the heater hoses.

❑ Remove:

- the driver's front airbag (see **Driver's frontal airbag: Removal - Refitting**) (88C, Airbags and pretensioners),
- the steering wheel (see **Steering wheel: Removal - Refitting**) (36A, Steering assembly),
- the steering column switch assembly (see **Steering column switch assembly: Removal - Refitting**) (84A, Control - Signals),
- the instrument panel (see **Instrument panel: Removal - Refitting**) (83A, Instrument panel),
- the storage compartment,
- the radio (see **Radio: Removal - Refitting**) (86A, Radio),
- the dashboard (see **Dashboard: Removal - Refitting**) (57A, Interior equipment),
- the front air distribution ducts (see **61A**, **Heating**, **Front air distribution duct: Removal - Refitting**, page **61A-9**) ,
- the steering column (see **Steering column: Removal - Refitting**) (36A, Steering assembly).

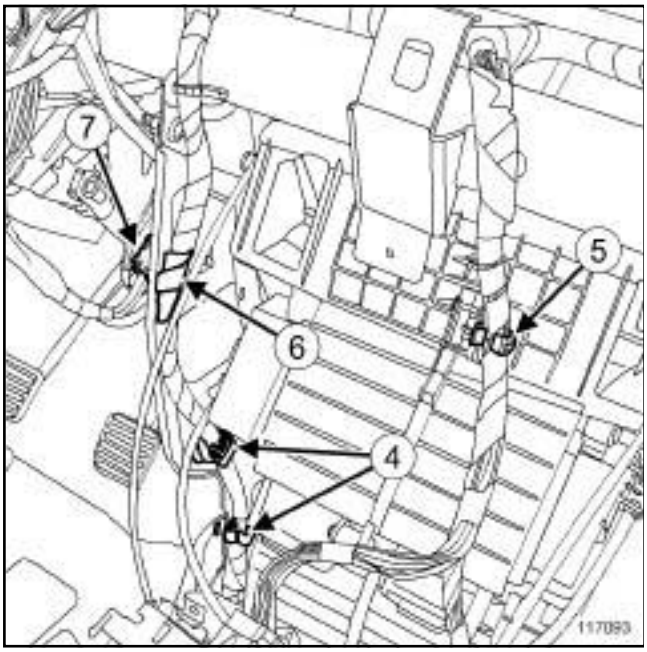

117093

❑ Unclip:

- the wiring at (**4**) ,
- the wiring on the distribution unit at (**5**) .

❑ Unclip the wiring at (**6**) .

LEFT-HAND DRIVE

❑ Unclip the ignition switch connector ***(7)*** from its mounting.

DIESEL VEHICLE

24757

❑ Remove:

- the heating resistor relay mounting bolt (**9**) ,
- the heating resistor relay mounting.

❑ Disconnect the connector (**10**) from the heating resistor unit.

❑ Remove the dashboard cross member (see **Dashboard cross member: Removal - Refitting**) (42A, Upper front structure).

II - REMOVAL OPERATION

❑ Disconnect:

- the air conditioning control panel connector,
- the passenger compartment fan assembly connector,
- the passenger compartment fan assembly resistor unit connector.

REAR SEATS AIR DUCT

❏ Separate the C-pillar air distribution ducts from the distribution unit.

❏ Put a container in place to recover the coolant.

❏ Remove:

- the distribution unit,
- the distribution unit control panel.

❏ Remove from the distribution unit:

- the air recirculation control cable,
- the air distribution cable,
- the air mixing cable,
- the passenger compartment blower unit,
- the passenger compartment blower unit control unit,
- the heater matrix pipes,
- the heater matrix,
- the evacuation ring.

AIR CONDITIONING

❏ Remove the expansion valve.

DIESEL VEHICLE

❏ Remove the heating resistors.

REFITTING

I - REFITTING PREPARATION OPERATION

❏ Check that the parts are in good condition and replace any defective parts, if necessary.

> **WARNING**
> To avoid any leaks, check that the pipe surface is sound before positioning the new seal. The surface must be clean and scratch free.

❏ Always replace the seals between the heater matrix pipes and the heater matrix.

❏ Refit on the distribution unit:

- the heater matrix,
- the heater matrix pipes,
- the passenger compartment fan assembly control unit,
- the passenger compartment blower unit,
- the air mixing cable,
- the air distribution cable,
- the air recirculation control cable,
- the trim kit,
- the evacuation ring,
- the control panel.

DIESEL VEHICLE

❏ Refit the heating resistors.

AIR CONDITIONING

❏ Refit the expansion valve.

II - REFITTING OPERATION

❏ Refit the distribution unit.

REAR SEATS AIR DUCT

❏ Connect the C-pillar air distribution ducts onto the distribution unit.

❏ Refit:

- the dashboard cross member (see **Dashboard cross member: Removal - Refitting**) (42A, Upper front structure),
- the distribution unit bolts.

❏ Connect:

- the connector of the passenger compartment fan assembly resistor unit,
- the passenger compartment fan assembly connector,
- the air conditioning control panel connector.

III - FINAL OPERATION

❏ Refit the floor carpet.

> Note:
>
> Check that the floor carpet reaches under the accelerator pedal end-stop.

DIESEL VEHICLE

❏ Connect the heating resistor connector.

❏ Refit:

- the heating resistor relay mounting,
- the heating resistor relay mounting bolt.

❏ Clip on:

- the starter switch connector on its mounting.
- the wiring at ***(6)*** .

❏ Clip:

- the wiring on the distribution unit at ***(5)*** ,
- the wiring at ***(4)*** .

❏ Refit:

- the steering column (see **Steering column: Removal - Refitting**) (36A, Steering assembly),
- the front air distribution ducts (see **61A**, **Heating**, **Front air distribution duct: Removal - Refitting**, page **61A-9**) ,
- the dashboard (see **Dashboard: Removal - Refitting**) (57A, Interior equipment),
- the instrument panel (see **Instrument panel: Removal - Refitting**) (83A, Instrument panel),
- the steering column switch assembly (see **Steering column switch assembly: Removal - Refitting**) (84A, Control - Signals),
- the steering wheel (see **Steering wheel: Removal - Refitting**) (36A, Steering assembly),
- the radio (see **Radio: Removal - Refitting**) (86A, Radio),
- the storage compartment,
- the driver's front airbag (see **Driver's frontal airbag: Removal - Refitting**) (88C, Airbags and seat belt pretensioners).

❏ Connect the heater hoses.

❏ Refit the clips on the heater hoses.

❏ Remove the hose clamps **(Ms. 583)**.

AIR CONDITIONING

❏ Replace the seals.

❏ Lubricate the seals using recommended air conditioning oil to make fitting easier.

❏ Fit the pipe unions on the expansion valve.

❏ Refit the pipe union bolts on the expansion valve.

❏ Position the engine compartment bulkhead soundproofing.

❏ Consult the refrigerant and oil quantity values before filling the circuit (see **62A**, **Air conditioning**, **Air conditioning: Parts and consumables for the repair**, page **62A-9**) .

❏ Fill the refrigerant circuit using the **refrigerant charging station** (see **Refrigerant circuit: Draining - Filling**) .

❏ Check for leaks (see **Refrigerant circuit: Check**) .

❏ Check that the air conditioning is operating correctly (see **Air conditioning: Check**) .

❏ Connect the battery (see **Battery: Removal - Refitting**) (80A, Battery).

❏ Unlock the airbag computer (see **Fault finding - Replacement of components**) (88C, Airbags and pretensioners).

❏ Fill the cooling circuit (see **Cooling system: Draining - Refilling**) (19A, Cooling).

❏ Bleed the cooling circuit (see **Cooling system: Draining - Refilling**) (19A, Cooling).

❏ Check the cooling circuit (see **Engine cooling system: Check**) (19A, Cooling).

LEFT-HAND DRIVE

Special tooling required	
Ms. 583	Pipe clamps.

Tightening torques ▽	
upper nuts of the strut	**21 N.m**
lower bolts of the strut	**21 N.m**

REMOVAL

I - REMOVAL PREPARATION OPERATION

❑ Lock the airbag computer (see **Fault finding - Replacement of components**) (88C, Airbags and pretensioners).

❑ Disconnect the battery (see **Battery: Removal - Refitting**) (80A, Battery).

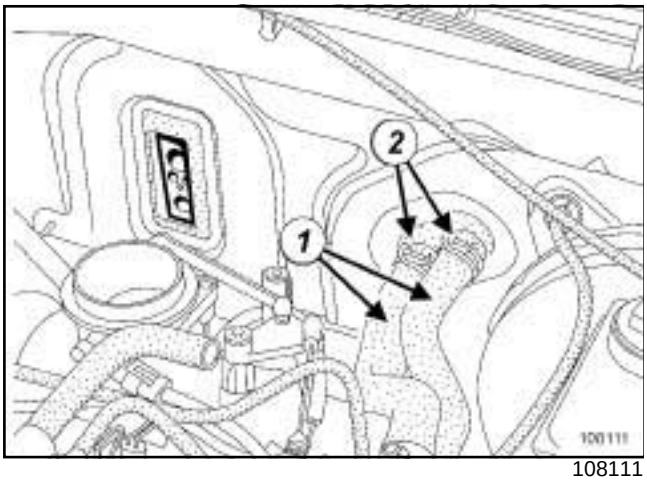

108111

❑ Fit hose clamps **(Ms. 583)** at (**1**) .

❑ Remove the clips (**2**) from the heater hoses.

❑ Disconnect the heater hoses.

❑ Remove:

- the driver's front airbag (see **Driver's frontal airbag: Removal - Refitting**) (88C, Airbags and pretensioners),
- the steering wheel (see **Steering wheel: Removal - Refitting**) (36A, Steering assembly),
- the steering column switch assembly (see **Steering column switch assembly: Removal - Refitting**) (84A, Control - Signals),
- the instrument panel (see **Instrument panel: Removal - Refitting**) (83A, Instrument panel),
- the storage compartment,
- the radio (see **Radio: Removal - Refitting**) (86A, Radio),
- the dashboard (see **Dashboard: Removal - Refitting**) (57A, Interior equipment).

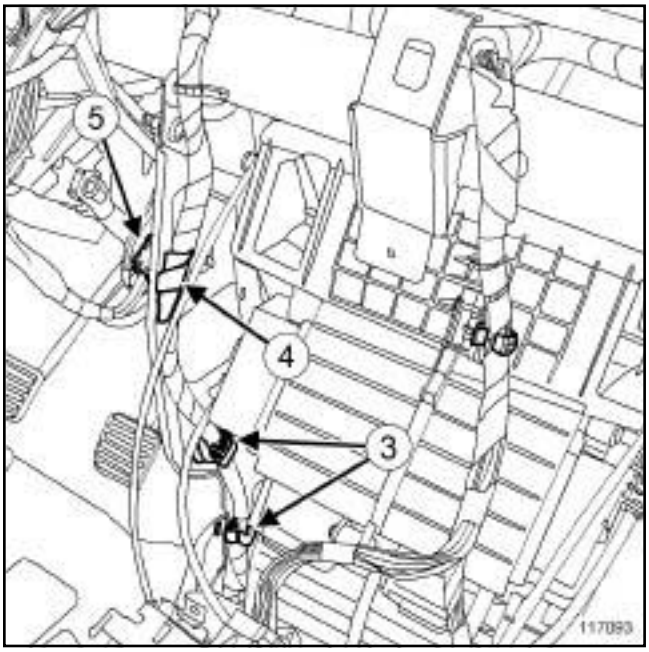

117093

❑ Unclip the wiring at (**3**) .

❑ Unclip:

- the wiring at (**4**) ,
- the ignition switch connector (**5**) from its mounting.

LEFT-HAND DRIVE

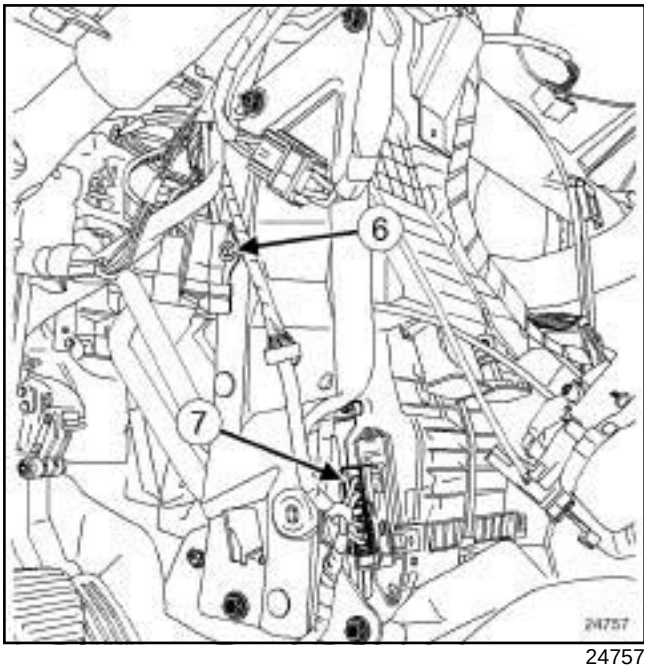

24757

❑ Remove:

- the heating resistor relay mounting bolt (**6**) ,
- the heating resistor relay mounting.

❑ Disconnect the connector (**7**) from the heating resistor.

❑ Partially lift the floor carpet to access the strut bolt.

❑ Mark the position of the strut on the body before removing it.

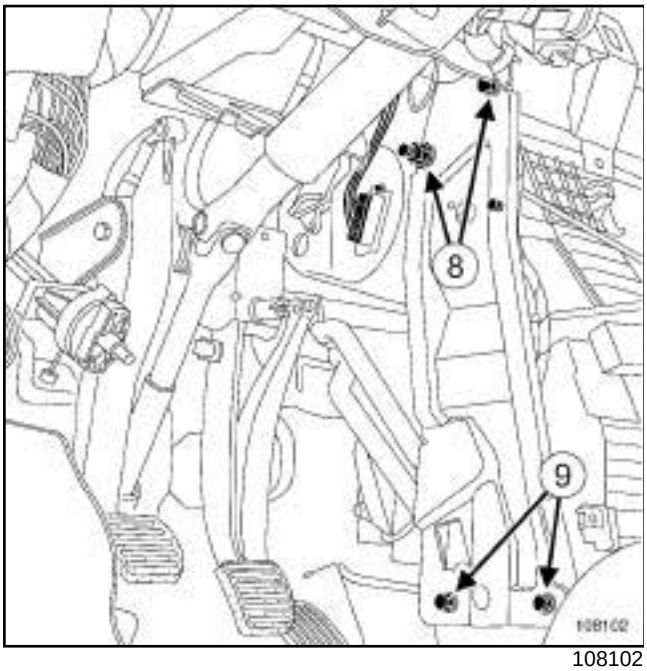

108102

❑ Remove:

- the two upper nuts (**8**) from the strut,
- the two lower bolts (**9**) from the strut,
- the stay.

❑ Put a container in place to recover the coolant.

II - REMOVAL OPERATION

H79

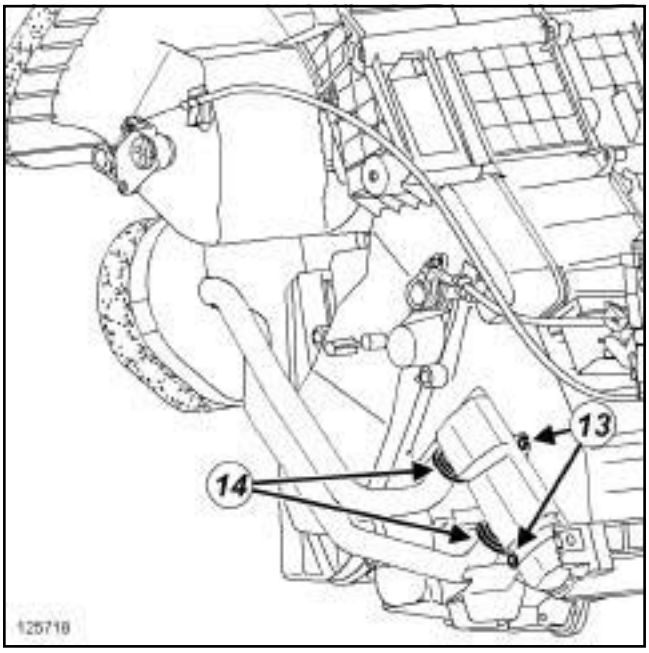

125718

❑ Remove:

- both heater matrix bolts (**13**) ,
- the heater matrix pipe clips (**14**) using a screwdriver.

❑ Remove the heater matrix.

REFITTING

I - REFITTING PREPARATION OPERATION

❑ Always replace the seals between the pipes and the heater matrix.

WARNING
To avoid any leaks, check that the pipe surface is sound before positioning the new seal. The surface must be clean and scratch free.

LEFT-HAND DRIVE

II - REFITTING OPERATION

❏ Refit the heater matrix.

H79

❏ Refit:

- the heater matrix,
- the heater matrix bolts.

❏ Position the heater matrix pipes on the heater matrix.

❏ Refit the heater matrix pipe clips.

III - FINAL OPERATION

❏ Refit:

- the strut,
- the two lower bolts on the strut, respecting the marking made during the removal operation,
- the two upper nuts to the strut,

❏ Torque tighten:

- the **upper nuts of the strut (21 N.m)**,
- the **lower bolts of the strut (21 N.m)**.

❏ Position the floor carpet.

Note:

Check that the floor carpet reaches under the accelerator pedal end-stop.

❏ Connect the heating resistor connector.

❏ Refit:

- the heating resistor relay mounting,
- the heating resistor relay mounting bolt.

❏ Clip on:

- the starter switch connector on its mounting.
- the wiring onto the strut.

❏ Clip the wiring onto the strut.

❏ Refit:

- the dashboard (see **Dashboard: Removal - Refitting**) (57A, Interior equipment),
- the radio (see **Radio: Removal - Refitting**) (86A, Radio),
- the storage compartment,
- the instrument panel (see **Instrument panel: Removal - Refitting**) (83A, Instrument panel),
- the steering column switch assembly (see **Steering column switch assembly: Removal - Refitting**) (84A, Control - Signals),
- the steering wheel (see **Steering wheel: Removal - Refitting**) (36A, Steering assembly).
- the driver's front airbag (see **Driver's frontal airbag: Removal - Refitting**) (88C, Airbags and seat belt pretensioners).

❏ Fit the heater hoses.

❏ Refit the clips on the heater hoses.

❏ Remove the hose clamps **(Ms. 583)**.

❏ Connect the battery (see **Battery: Removal - Refitting**) (80A, Battery).

❏ Fill the cooling circuit (see **Cooling system: Draining - Refilling**) (19A, Cooling).

❏ Bleed the cooling circuit (see **Cooling system: Draining - Refilling**) (19A, Cooling).

❏ Check the cooling circuit (see **Engine cooling system: Check**) (19A, Cooling).

❏ Unlock the airbag computer (see **Fault finding - Replacement of components**) (88C, Airbags and pretensioners).

REMOVAL

I - REMOVAL PREPARATION OPERATION

- ❑ Lock the airbag computer (see **Fault finding - Replacement of components**) (88C, Airbags and pretensioners).
- ❑ Disconnect the battery (see **Battery: Removal - Refitting**) (80A, Battery).
- ❑ Remove:
  - the driver's front airbag (see **Driver's frontal airbag: Removal - Refitting**) (88C, Airbags and pretensioners),
  - the steering wheel (see **Steering wheel: Removal - Refitting**) (36A, Steering assembly),
  - the steering column switch assembly (see **Steering column switch assembly: Removal - Refitting**) (84A, Control - Signals),
  - the instrument panel (see **Instrument panel: Removal - Refitting**) (83A, Instrument panel),
  - the radio (see **Radio: Removal - Refitting**) (86A, Radio),
  - the dashboard (see **Dashboard: Removal - Refitting**) (57A, Interior equipment).

II - REMOVAL OPERATION

LEFT-HAND DRIVE

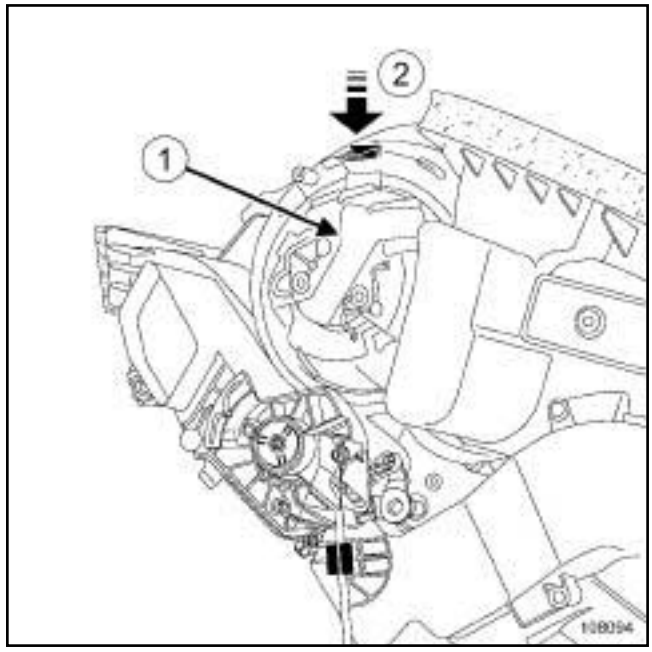

108094

- ❑ Disconnect the fan assembly connector (**1**) .
- ❑ Press the tab (**2**) , and turn the fan assembly a quarter of a turn clockwise.
- ❑ Remove the fan assembly.

REFITTING

- ❑

> Note:
>
> A sharp snap will be heard when the fan assembly is refitted.

- ❑ Proceed in the reverse order to removal.
- ❑ Unlock the airbag computer (see **Fault finding - Replacement of components**) (88C, Airbags and pretensioners).

Note:

Do not remove the dashboard.

REMOVAL

I - REMOVAL PREPARATION OPERATION

❏ Unclip the soundproofing under the dashboard using unclipping pliers.

II - REMOVAL OPERATION

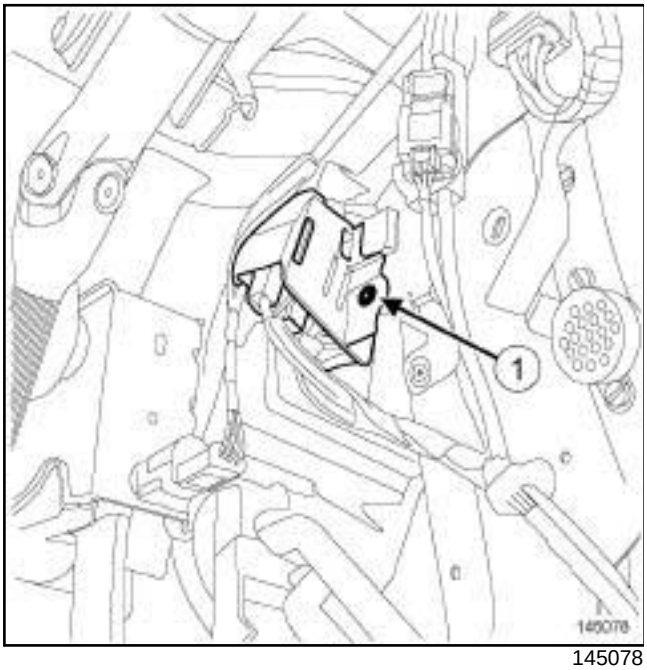

145078

❏ Remove the bolt from the heating resistor relay unit (**1**) .

❏ Remove the heating resistor relay unit support from its support.

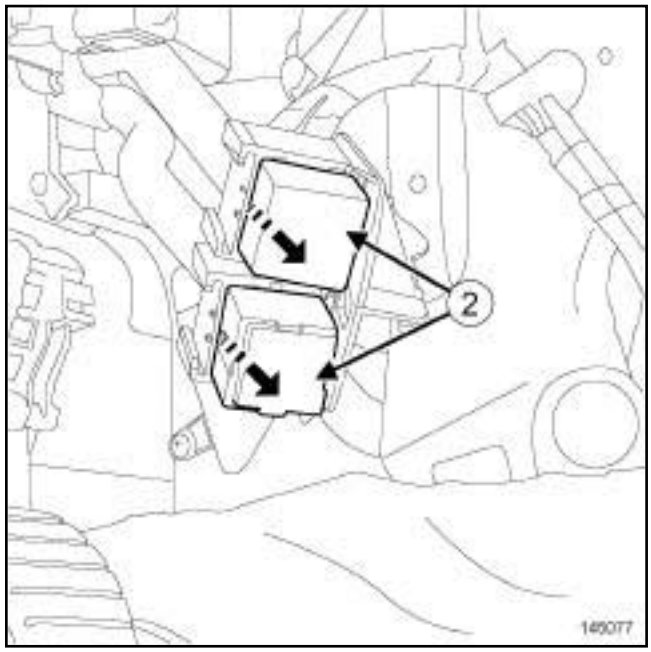

145077

❏ Remove the heating resistor relays (**2**) in the direction of the arrows.

REFITTING

REFITTING OPERATION

❏ Proceed in the reverse order to removal.

Tightening torques ▽	
lower bolts of the strut	**21 N.m**
upper nuts of the strut	**21 N.m**

REMOVAL

I - REMOVAL PREPARATION OPERATION

❏ Lock the airbag computer (see **Fault finding - Replacement of components**) (88C, Airbags and pretensioners).

❏ Disconnect the battery (see **Battery: Removal - Refitting**) (80A, Battery).

❏ Remove:

- the driver's front airbag (see **Driver's frontal airbag: Removal - Refitting**) (88C, Airbags and pretensioners),
- the steering wheel (see **Steering wheel: Removal - Refitting**) (36A, Steering assembly),
- the steering column switch assembly (see **Steering column switch assembly: Removal - Refitting**) (84A, Control - Signals),
- the instrument panel (see **Instrument panel: Removal - Refitting**) (83A, Instrument panel)
- the storage compartment,
- the radio (see **Radio: Removal - Refitting**) (86A, Radio),
- the dashboard (see **Dashboard: Removal - Refitting**) (57A, Interior equipment).

LEFT-HAND DRIVE

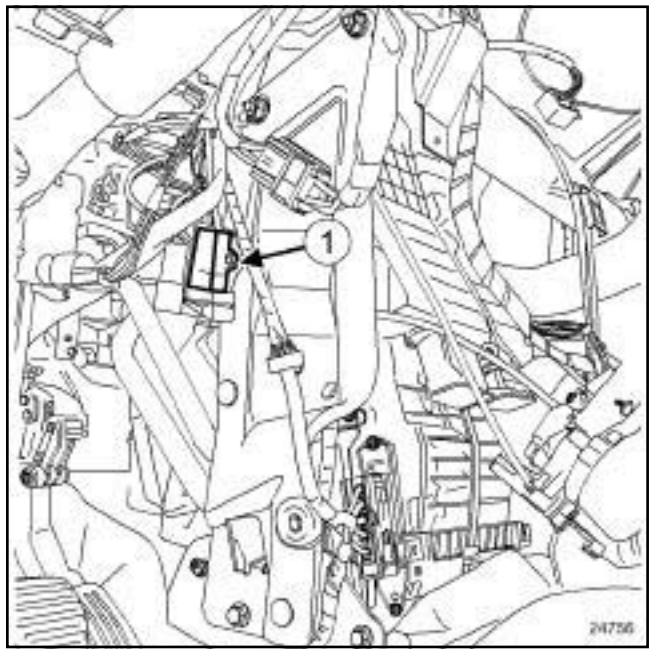

24756

❏ Remove:

- the heating resistor relay mounting bolt (**1**) ,
- the heating resistor relay mounting.

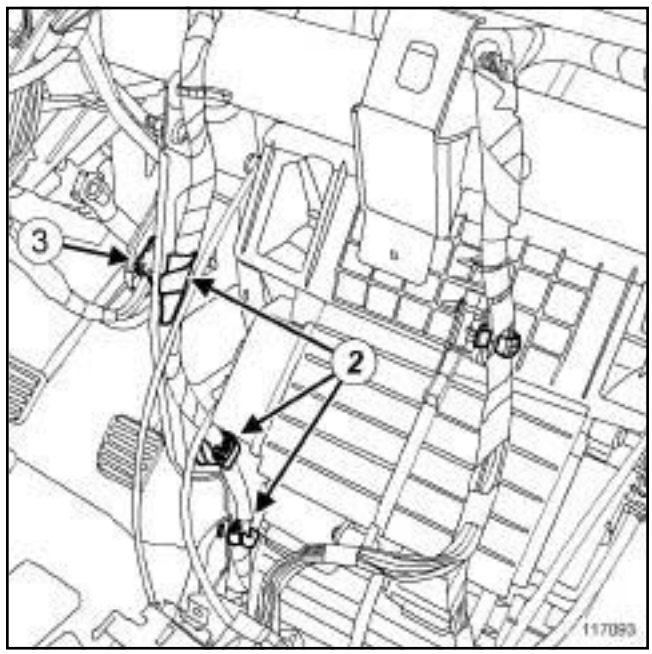

117093

❏ Unclip:

- the wiring at (**2**) ,
- the ignition switch connector (**3**) from its mounting.

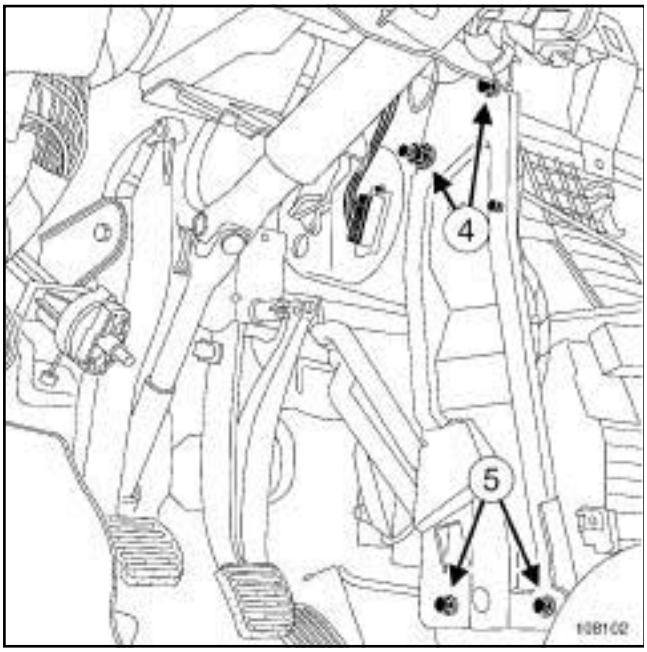

108102

- ❑ Partially lift the floor carpet to access the strut bolts.
- ❑ Make a mark between the strut and the panel welded on to the tunnel to ensure correct geometry when refitting.
- ❑ Remove:
  - the upper nuts (**4**) from the strut,
  - the lower bolts (**5**) from the strut,
  - the stay.

II - REMOVAL OPERATION

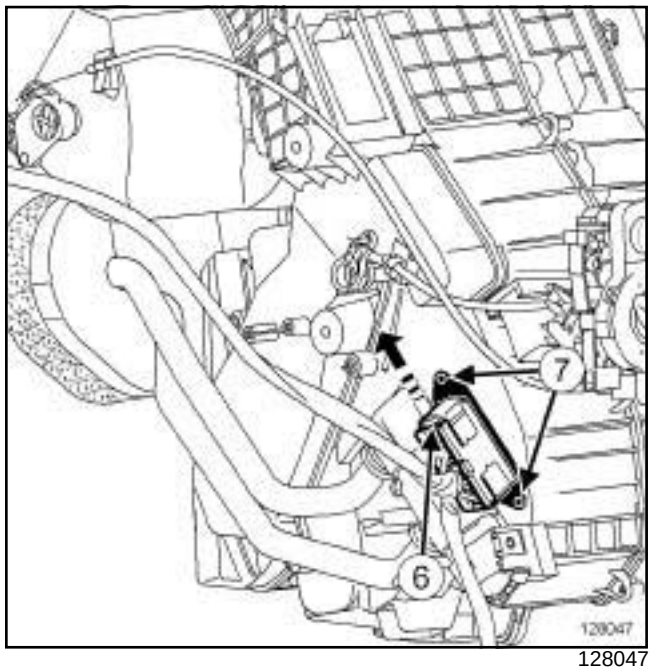

128047

- ❑ Disconnect the heating resistor connector (**6**) in the direction of the arrow.
- ❑ Remove:
  - the heating resistor bolts ***(7)*** ,
  - the heating resistor.

REFITTING

- ❑ Proceed in the reverse order to removal.
- ❑ Torque tighten:
  - the **lower bolts of the strut (21 N.m)**,
  - the **upper nuts of the strut (21 N.m)**.
- ❑ Check that the floor carpet reaches under the accelerator pedal end-stop.
- ❑ Unlock the airbag computer (see **Fault finding - Replacement of components**) (88C, Airbags and pretensioners).

Note:

It is not necessary to remove the dashboard to remove the passenger compartment fan assembly control unit.

REMOVAL

REMOVAL OPERATION

❑ Remove the lower trim of the dashboard (depending on the equipment level).

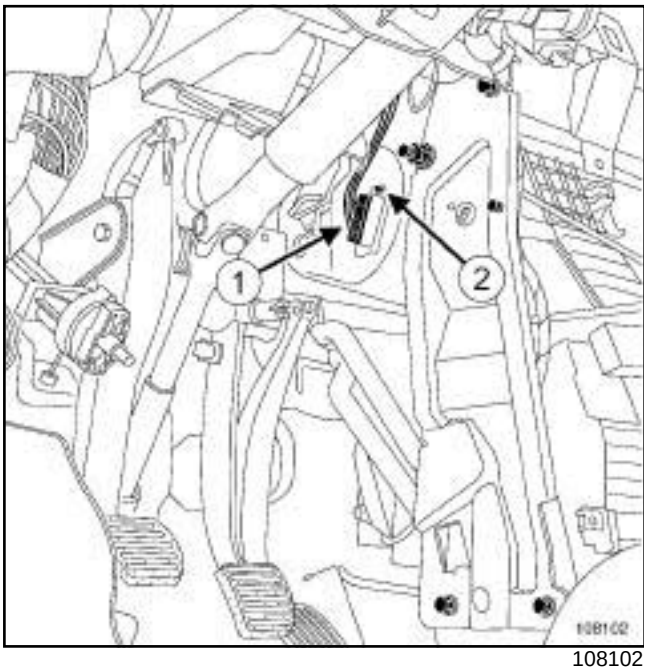

108102

❑ Disconnect the connector (**1**) from the passenger compartment fan assembly control unit.

❑ Remove:

- the bolt (**2**) from the passenger compartment fan assembly control unit,
- the passenger compartment fan assembly control unit.

REFITTING

❑ Proceed in the reverse order to removal.

REMOVAL

I - REMOVAL PREPARATION OPERATION

❏ Lock the airbag computer (see **Fault finding - Replacement of components**) (88C, Airbags and pretensioners).

❏ Disconnect the battery (see **Battery: Removal - Refitting**) (80A, Battery).

❏ Remove:

- the driver's front airbag (see **Driver's frontal airbag: Removal - Refitting**) (88C, Airbags and pretensioners),
- the steering wheel (see **Steering wheel: Removal - Refitting**) (36A, Steering assembly),
- the steering column switch assembly (see **Steering column switch assembly: Removal - Refitting**) (84A, Control - Signals),
- the instrument panel (see **Instrument panel: Removal - Refitting**) (83A, Instrument panel),
- the storage compartment,
- the radio (see **Radio: Removal - Refitting**) (86A, Instrument panel),
- the dashboard (see **Dashboard: Removal - Refitting**) (57A, Interior equipment).

❏ Place:

- the air mixing control to the hottest position,
- the air distribution control to the air vent position on the dashboard,
- the air recirculation switch to the air recirculation position.

❏ Disconnect the climate control panel connector .

II - REMOVAL OPERATION

H79

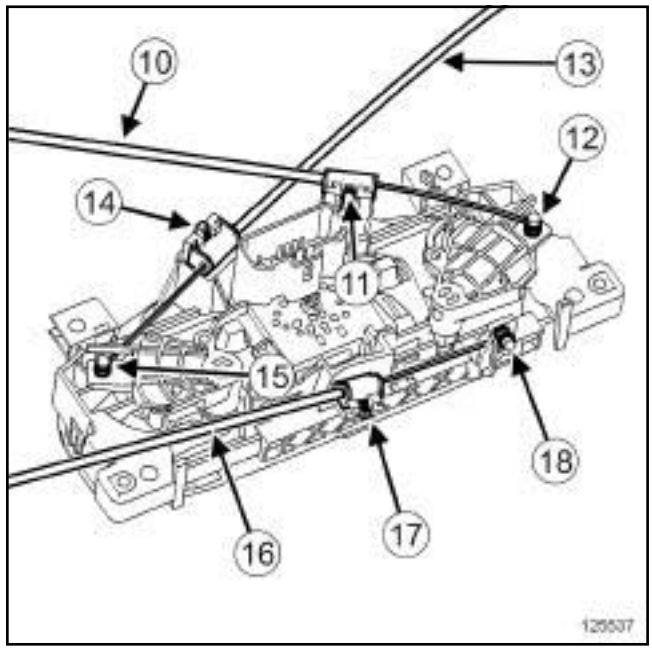

125537

❏ For the air mixing cable (**10**) , remove:

- the sheath stop by moving the tab (**11**) to one side,
- the control panel cable at (**12**) .

❏ For the air distribution control cable (**13**) , remove:

- the sheath stop by moving the tab (**14**) to one side,
- the control panel cable at (**15**) .

❏ For the air recirculation cable (**16**) , remove:

- the sheath stop by moving the tab (**17**) to one side,
- the control panel cable at (**18**) .

❏ Remove the climate control control panel.

REFITTING

❏ Proceed in the reverse order to removal.

❏ Check that the controls can be moved to their fullest extent.

❏ Unlock the airbag computer (see **Fault finding - Replacement of components) (88C, Airbags and pretensioners**).

Note:

The pictures show the fittings present on Logan.

Fitting A

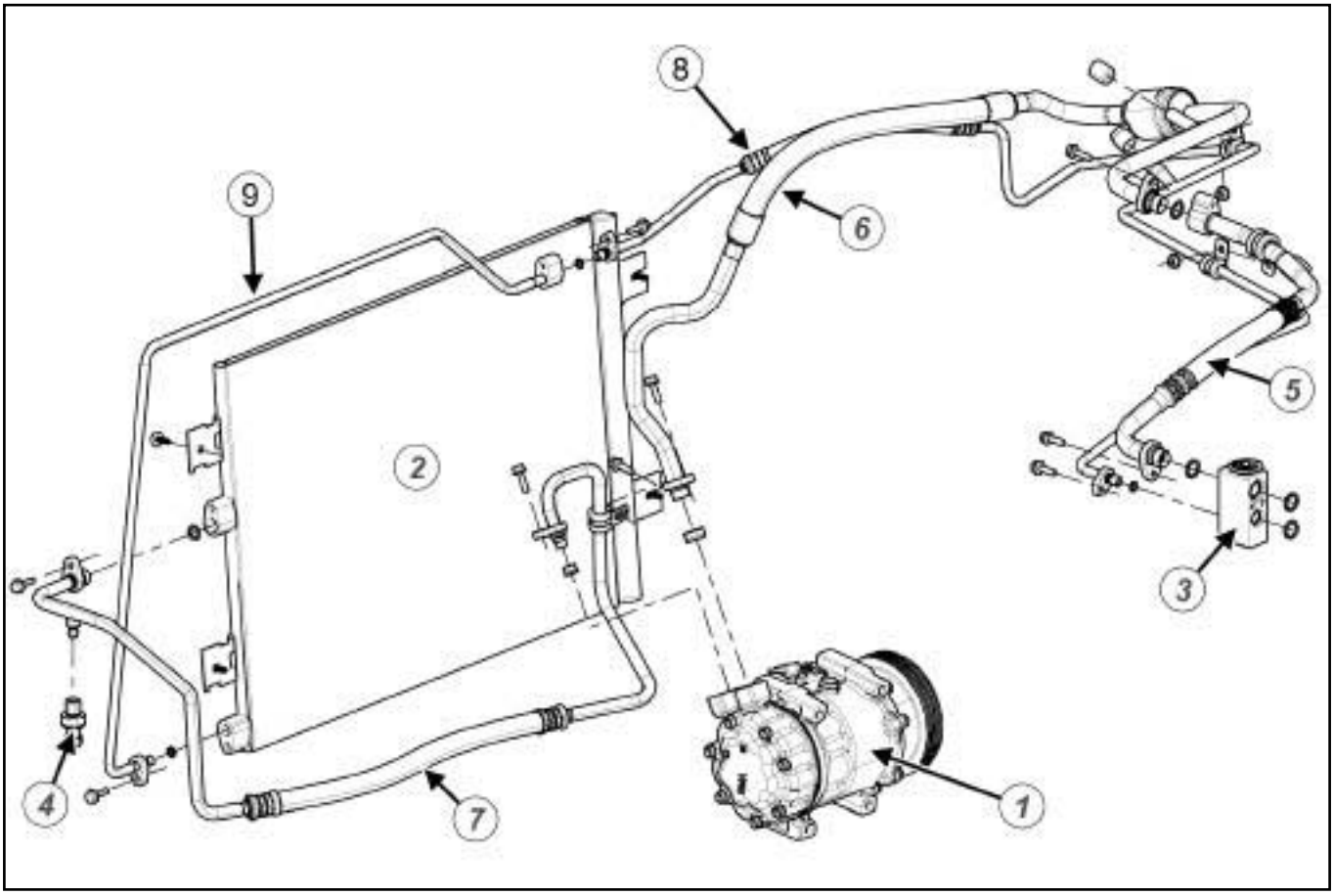

143987

Fitting B

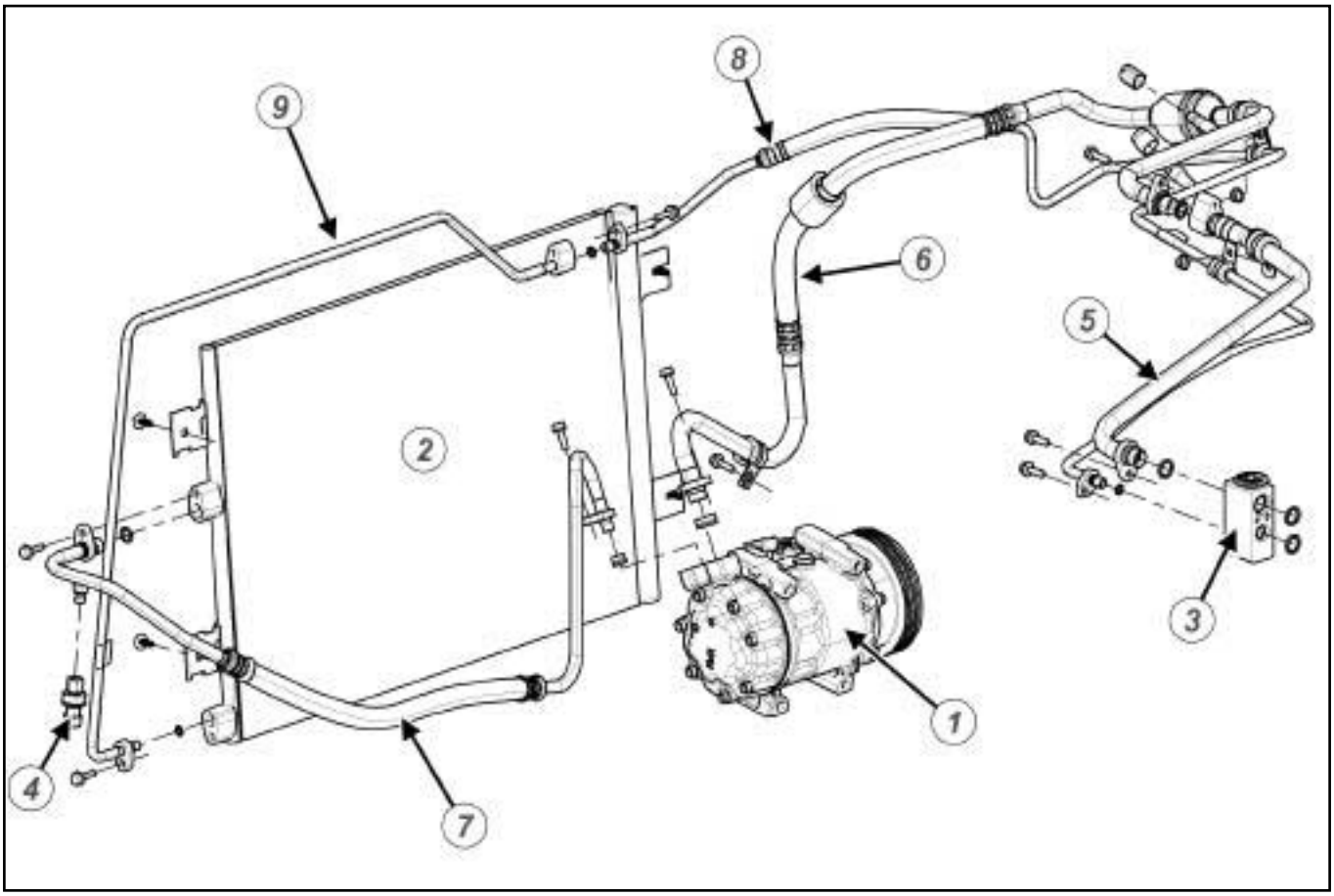

143988

Fitting C

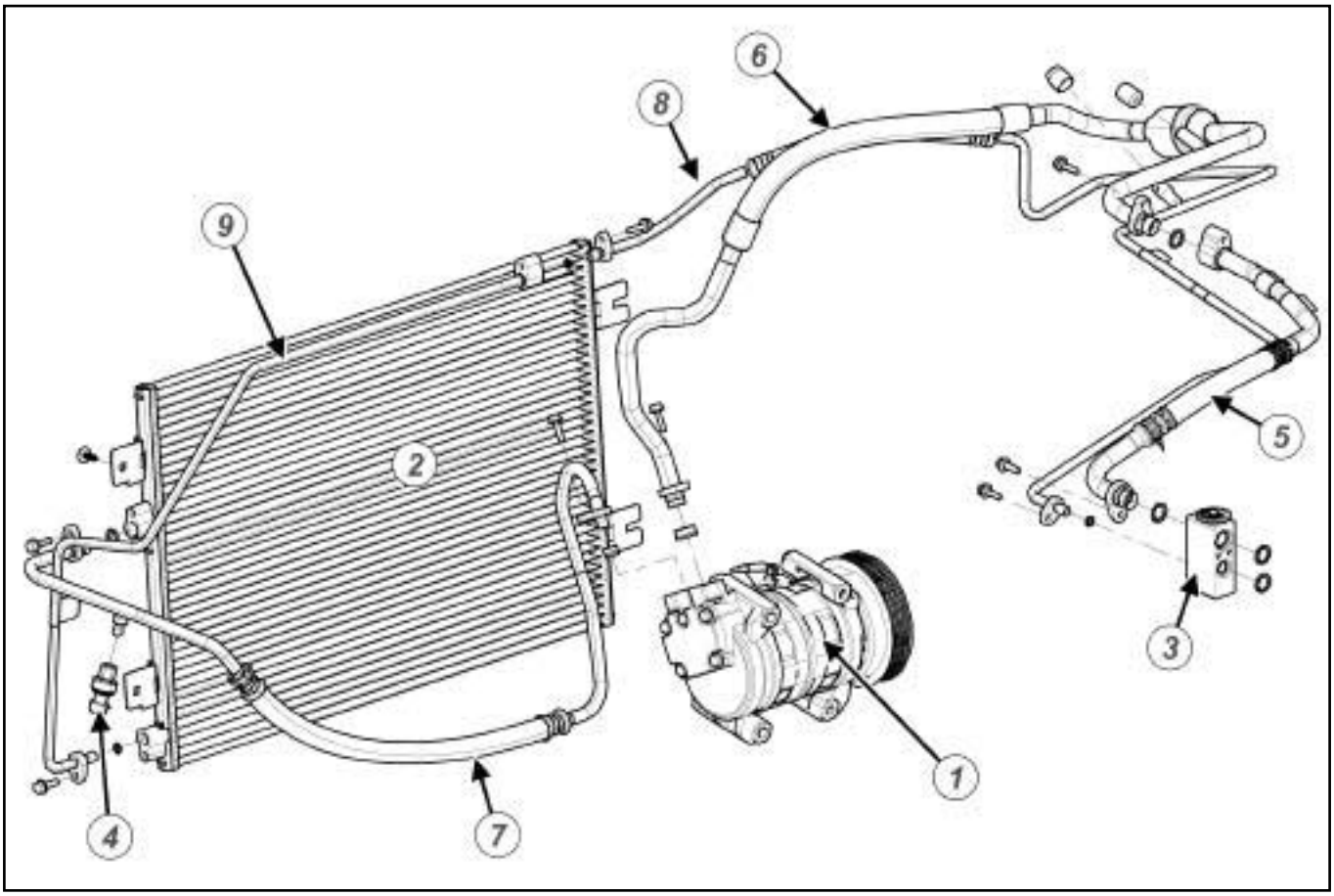

143991

Fitting D

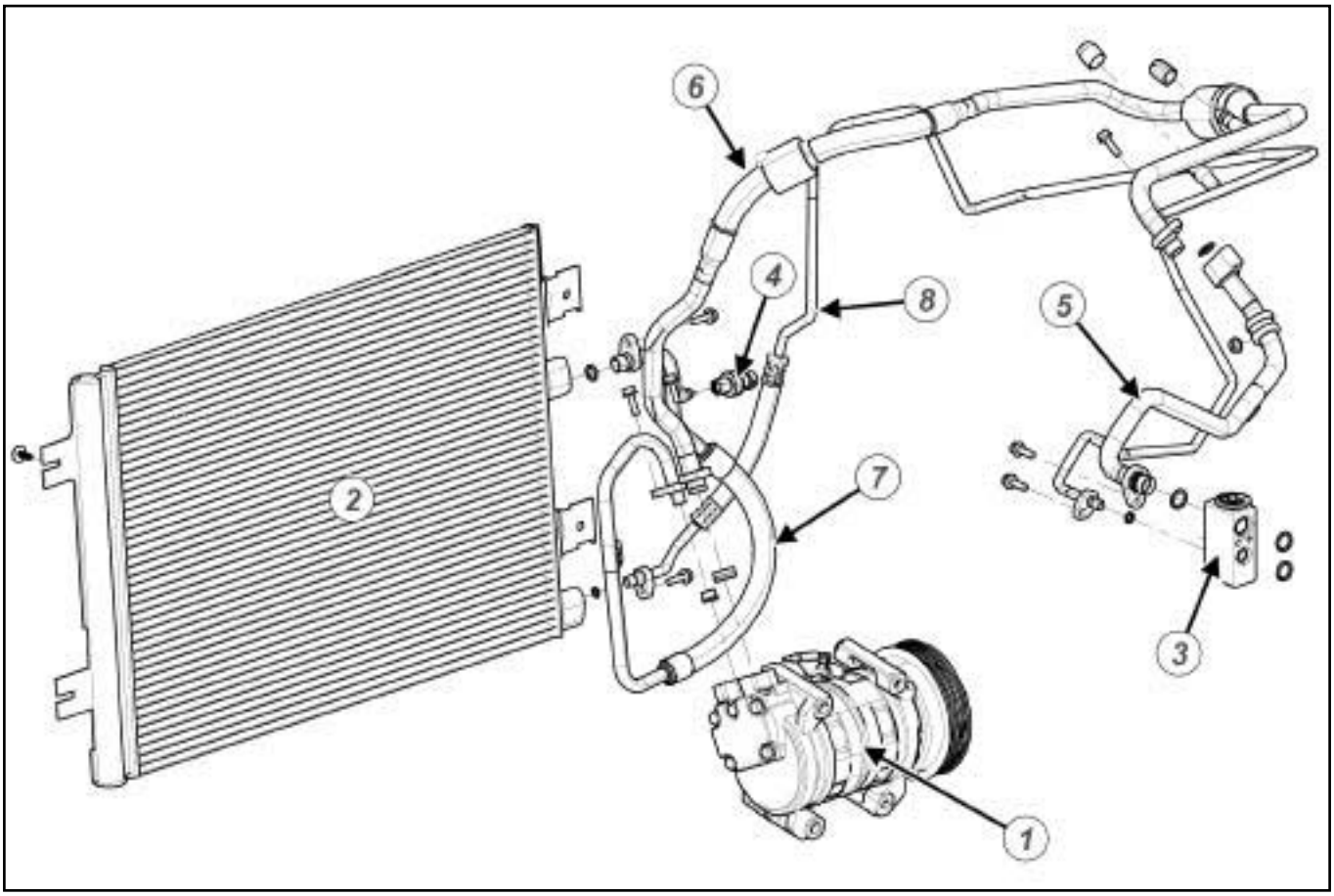

143990

Fitting E

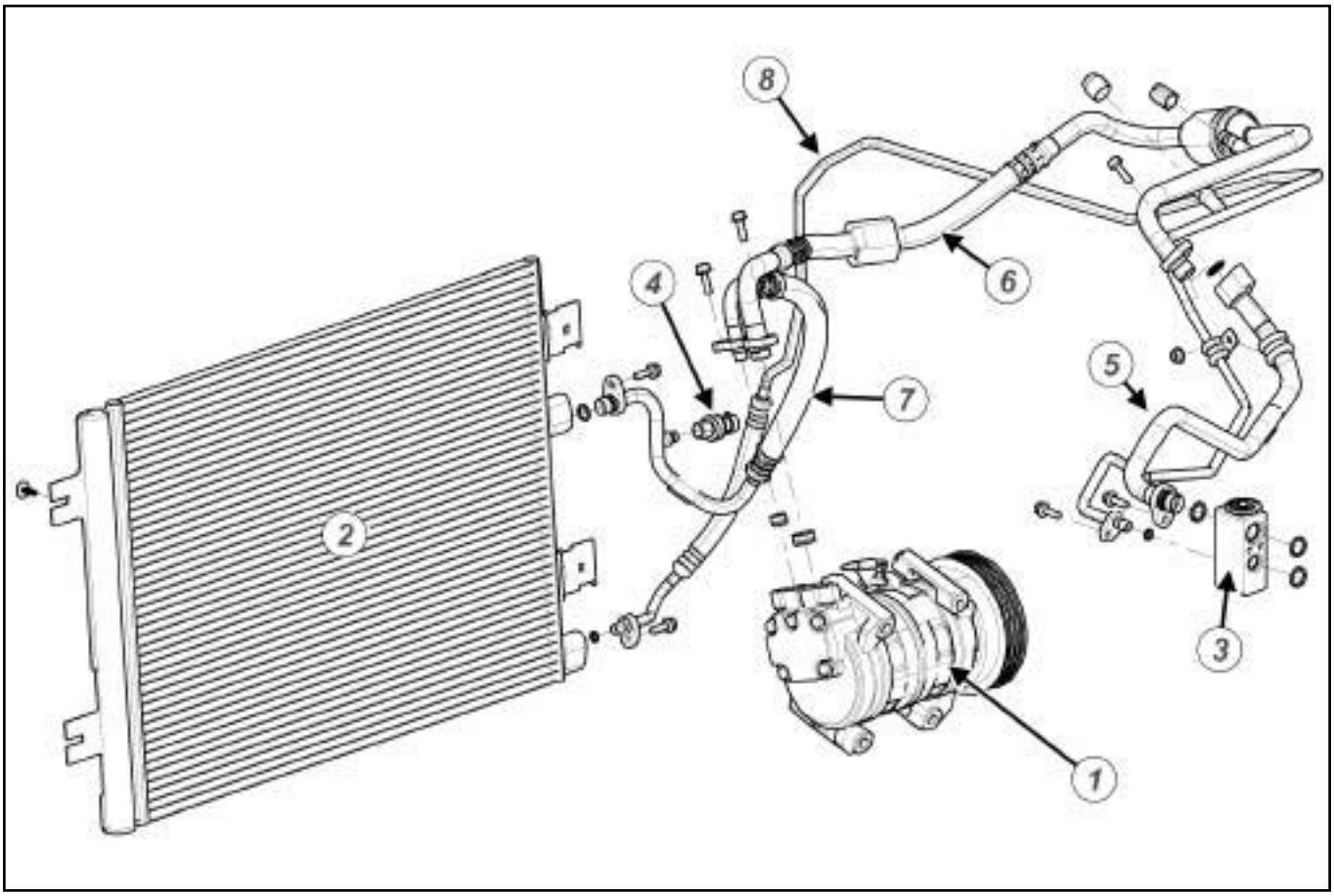

143993

Fitting F

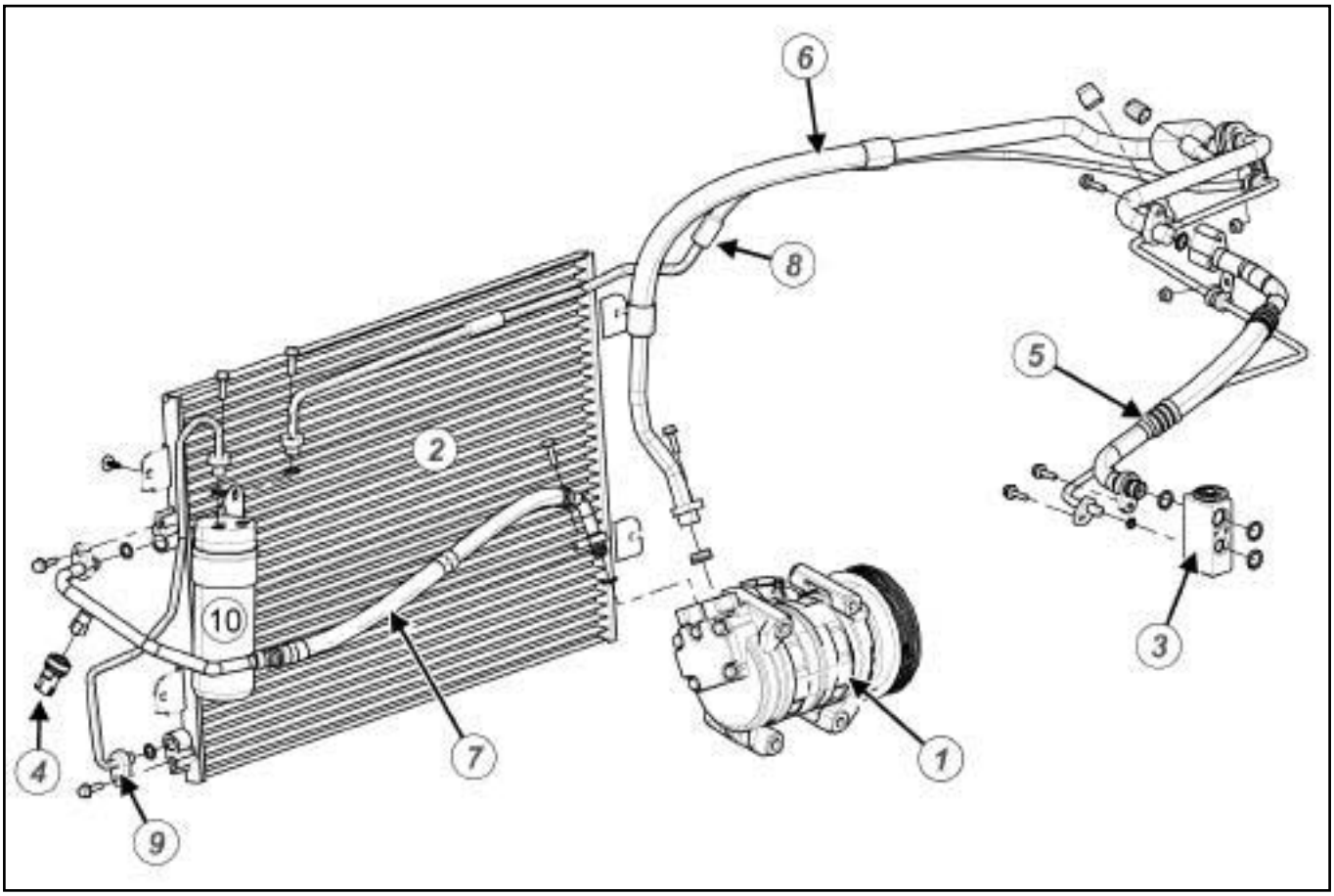

143989

Fitting G

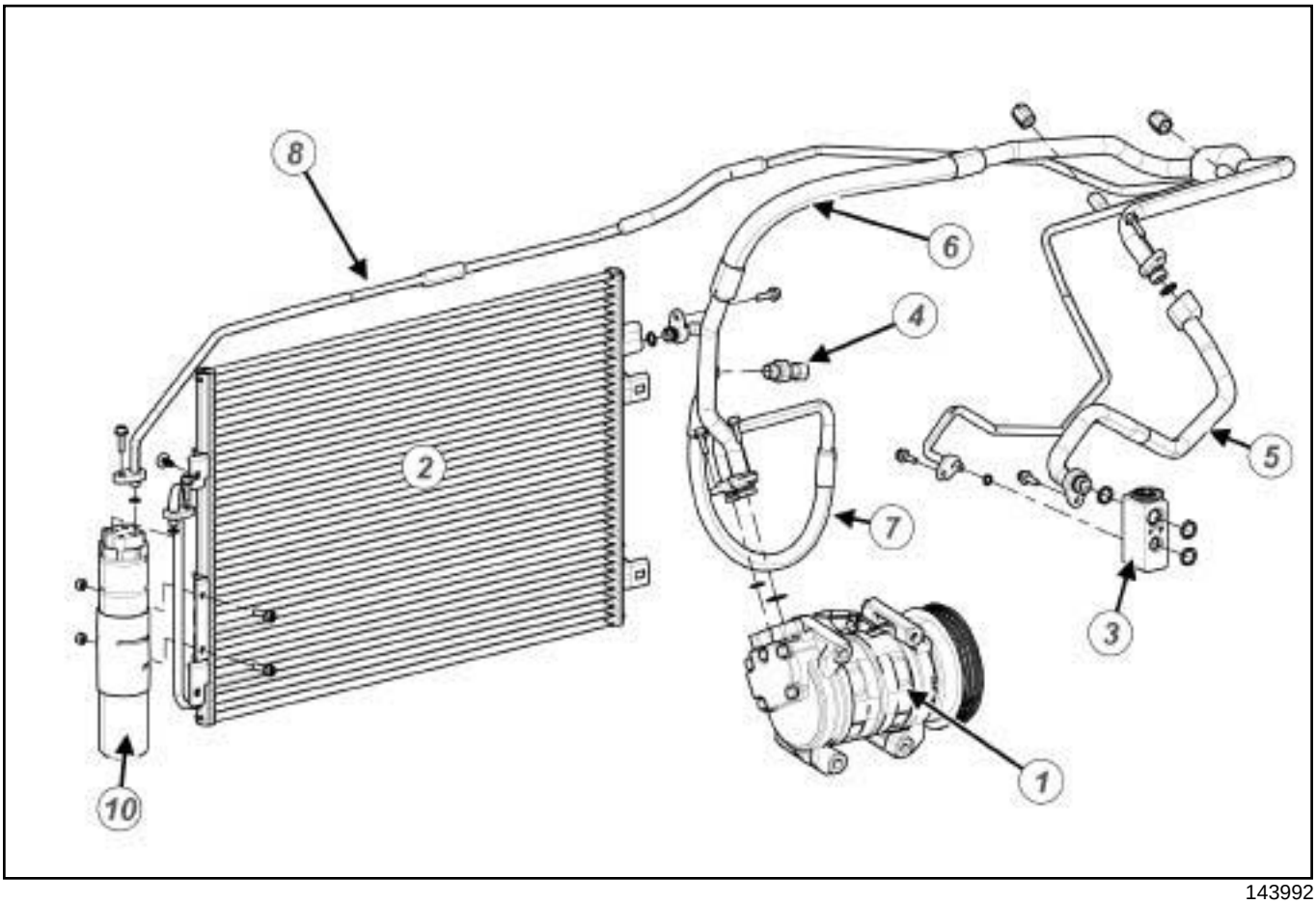

143992

1	Compressor	(see **62A**, **Air conditioning**, **Compressor: Removal - Refitting**, page **62A-12**)
2	Condenser	(see **62A**, **Air conditioning**, **Condenser: Removal - Refitting**, page **62A-10**)
3	Expansion valve	(see **62A**, **Air conditioning**, **Expansion valve: Removal - Refitting**, page **62A-16**)
4	Pressure sensor	(see **62A**, **Air conditioning**, **Pressure sensor: Removal - Refitting**, page **62A-23**)
5	Expansion valve/intermediate pipe connecting pipe	(see **62A**, **Air conditioning**, **Refrigerant circuit pipe: Removal - Refitting**, page **62A-21**)
6	Intermediate pipe - compressor connecting pipe	(see **62A**, **Air conditioning**, **Refrigerant circuit pipe: Removal - Refitting**, page **62A-21**)
7	Condenser - compressor connecting pipe	(see **62A**, **Air conditioning**, **Refrigerant circuit pipe: Removal - Refitting**, page **62A-21**)

8	Intermediate pipe - expansion valve connecting pipe (fittings A, B, and C)	(see **62A**, **Air conditioning**, **Refrigerant circuit pipe: Removal - Refitting**, page **62A-21**)
	Condenser - expansion valve connecting pipe (fitting D)	(see **62A**, **Air conditioning**, **Refrigerant circuit pipe: Removal - Refitting**, page **62A-21**)
	Dehydrator reservoir - expansion valve connecting pipe (fittings F and G)	(see **62A**, **Air conditioning**, **Refrigerant circuit pipe: Removal - Refitting**, page **62A-21**)
9	Condenser - intermediate pipe connecting pipe (fittings A, B, and C)	(see **62A**, **Air conditioning**, **Refrigerant circuit pipe: Removal - Refitting**, page **62A-21**)
	Condenser - dehydrator reservoir connecting pipe (fitting F)	(see **62A**, **Air conditioning**, **Refrigerant circuit pipe: Removal - Refitting**, page **62A-21**)
10	Dehydrator reservoir (fittings F and G)	(see **Dehydrator reservoir: Removal - Refitting**)

AIR CONDITIONING

To find out the part number of the oil used (see **Vehicle: Parts and consumables for the repair**) (04B, Consumables - Products).

Table of vehicle refrigerant capacities according to their engines and various specifications:

Engine	Refrigerant capacity (g)	Compressor	Type of oil	Total quantity of oil in the circuit (ml orcc)
D4D	**475 ± 35**	SANDEN SD7V16	SANDEN SP10	**135 ± 10**
K4M				
K7J				
K7M				
K9K				

Table of quantities of oil to add when replacing components:

Operation on the air-conditioning circuit	Quantity of oil (ml or cm^3)
Circuit oil change	Measure the volume recovered and add the same quantity of new oil
Split pipe or other rapid leak	**100**
Replacement of a condenser	Quantity recovered + **30**
Replacement of an evaporator	Quantity recovered + **30**
Replacement of the dehydrator reservoir	Quantity recovered + **15**
Replacement of a pipe	Quantity recovered + **10**
Removing / refitting a compressor	Quantity recovered
Replacement of a compressor	None added
Replacement of a compressor and one or more components of the heating and air conditioning system	None added
Standard replacement of a compressor	Top up as necessary
Standard replacement of a compressor and replacement of one or more heating and air conditioning circuit components	Top up as necessary

AIR CONDITIONING

Equipment required
refrigerant charging station

IMPORTANT
To avoid all risk of damage to the systems, apply the safety and cleanliness instructions and operation recommendations before carrying out any repair (see **Air conditioning: Precautions for the repair**) .

WARNING
To prevent moisture from entering the system, place plugs on the cold loop components which are open to the air.

Note:
Use blanking plugs for the fuel circuits with part numbers **77 01 208 229** or **77 01 476 857** to plug any openings exposed to the open air. They must be clean. Do not use any which have already been used to plug a fuel circuit.

Location and specifications (tightening torques, parts always to be replaced, etc.) (see **62A**, **Air conditioning**, **Air conditioning: List and location of components**, page **62A-1**) .

REMOVAL

I - REMOVAL PREPARATION OPERATION

❑ Position the vehicle on a two-post lift (see **Vehicle: Towing and lifting**) (02A, Lifting equipment).

WARNING
Consult the device's operating manual to avoid incorrect use.

❑ Drain the coolant circuit using the **refrigerant charging station**.

❑ Disconnect the battery (see **Battery: Removal - Refitting**) (80A, Battery).

❑ Remove the front bumper (see **Front bumper assembly: Exploded view**) and (see **Exterior body front trim assembly: Exploded view**) (55A, Exterior protection).

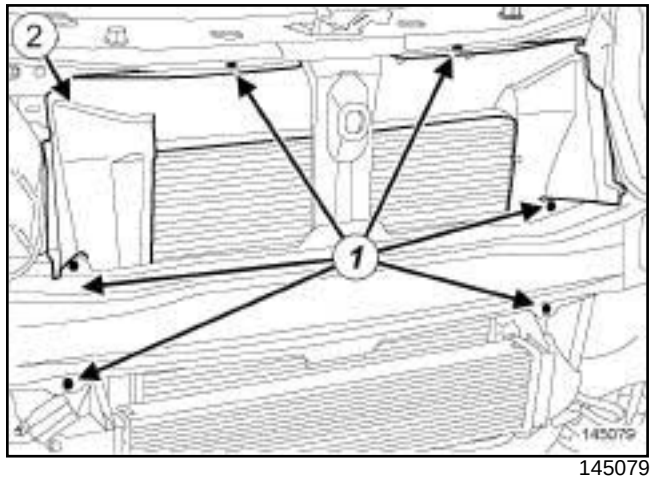

145079

❑ Remove:

- the air deflector mountings (**1**) ,
- the air deflector (**2**) .

K9K

❑ Remove the intercooler (see) (12B, Turbocharging).

II - REMOVAL OPERATION

❑ Remove the bolts from the pipes on the condenser (see **62A**, **Air conditioning**, **Air conditioning: List and location of components**, page **62A-1**) .

WARNING
In order to avoid any refrigerant leaks, do not damage (deform, twist, etc.) the pipe.

❑ Disconnect the pipes from the condenser (see **62A**, **Air conditioning**, **Air conditioning: List and location of components**, page **62A-1**) .

❑ Fit blanking plugs on the pipe openings.

❑ Remove (see **62A**, **Air conditioning**, **Air conditioning: List and location of components**, page **62A-1**) :

- the condenser bolts,
- the condenser.

AIR CONDITIONING

REFITTING

I - REFITTING PREPARATION OPERATION

❑

> **WARNING**
> Do not remove the blanking plugs from each component until the last moment.
>
> Also, do not remove the components from their packaging until they are to be fitted to the vehicle.

❑ Check, and if necessary replace, the refrigerant circuit pipe seal.

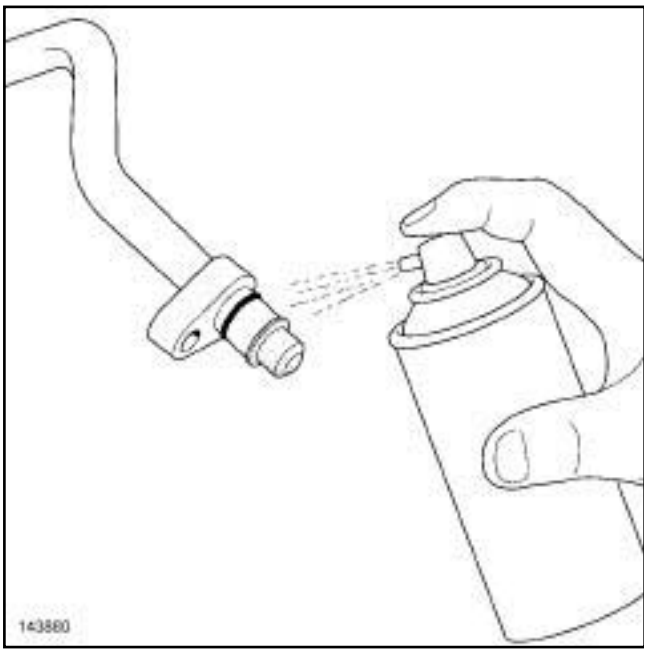

143880

❑ Clean the surface and the seal of the pipe using **ENGINE CLEANER** (see **Vehicle: Parts and consumables for the repair**) (04B, Consumables - Products).

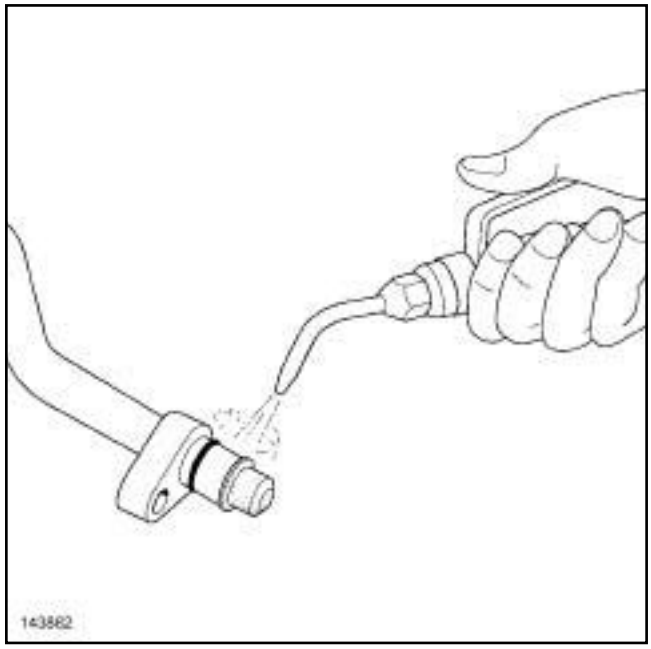

143882

❑ Use a **compressed air gun** to blow the surface and the seal of the connecting pipe.

❑ Lubricate the surface of the connecting pipe and the seal with air conditioning oil (see **62A**, **Air conditioning**, **Air conditioning: Parts and consumables for the repair**, page **62A-9**) .

❑ Remove the blanking plugs.

II - REFITTING OPERATION

❑ Proceed in the reverse order to removal.

❑ Consult the refrigerant and oil quantity values before filling the circuit (see **62A**, **Air conditioning**, **Air conditioning: Parts and consumables for the repair**, page **62A-9**) .

❑ Fill the refrigerant circuit using the **refrigerant charging station** (see **Refrigerant circuit: Draining - Filling**) .

❑ Check that the air conditioning system is operating correctly (see **Air conditioning: Check**) .

❑ Check for leaks (see **Refrigerant circuit: Check**) .

AIR CONDITIONING

Equipment required
refrigerant charging station

Tightening torques	
compressor bolts	**21 N.m**
pipe union bolts	**8 N.m**
pipe retaining bracket bolt on the compressor	**21 N.m**

IMPORTANT

Consult the safety instructions and cleanliness advice and the operation recommendations before carrying out any repairs (see **Air conditioning: Precautions for repair**).

WARNING

To prevent moisture from entering the system, place plugs on the cold loop components which are open to the air.

Note:

Use blanking plugs for the fuel circuits with part numbers **77 01 208 229** or **77 01 476 857** to plug any openings exposed to the open air. They must be clean. Do not use any which have already been used to plug a fuel circuit.

REMOVAL

I - REMOVAL PREPARATION OPERATION

❏ Position the vehicle on a two-post lift (see **Vehicle: Towing and lifting**) (02A, Lifting equipment).

WARNING

Consult the device's operating manual to avoid incorrect use.

❏ Drain the coolant circuit using the **refrigerant charging station** (see **Refrigerant circuit: Draining - Filling**) .

❏ Disconnect the battery (see **Battery: Removal - Refitting**) (80A, Battery).

❏ Remove:

- the front bumper (see **Front bumper: Removal - Refitting**) and (see **Exterior body front trim assembly: Exploded view**) (55A, Exterior protection),
- the front right-hand wheel (see **Wheel: Removal - Refitting**) (35A, Wheels and tyres),
- the accessories belt (see **Accessories belt: Removal - Refitting**) (11A, Top and front of engine).

II - REMOVAL OPERATION

K4M

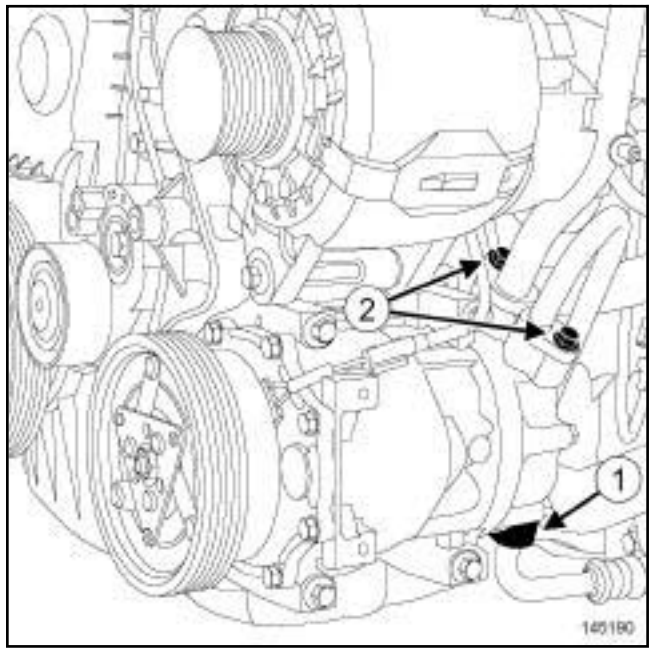

145190

❏ Remove:

- the pipe retaining bracket bolt (**1**) on the compressor,
- the pipe union bolts (**2**) on the compressor.

AIR CONDITIONING

K9K

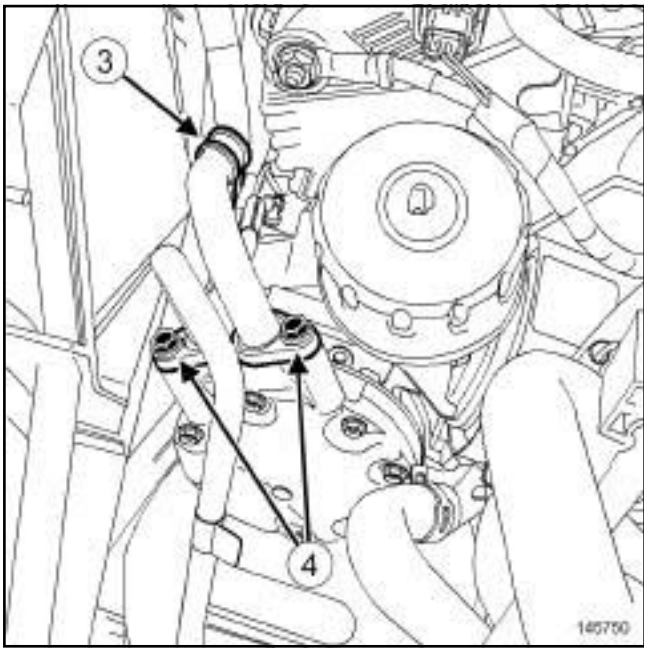

145750

❑ Remove:

- the bolt (**3**) from the pipe retaining clip on the compressor,
- the pipe union bolts (**4**) on the compressor.

❑

WARNING
In order to avoid any refrigerant leaks, do not damage (deform, twist, etc.) the pipe.

❑ Disconnect the compressor pipes.

❑ Fit blanking plugs in the pipe openings.

K4M

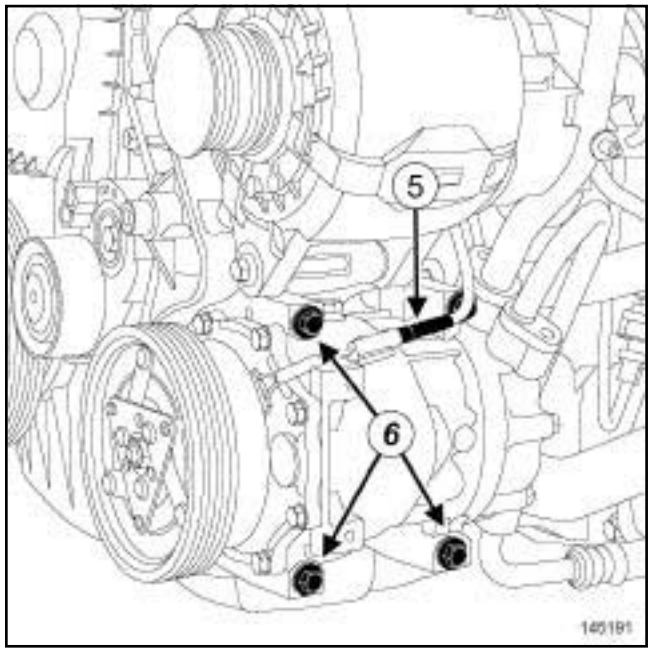

145191

❑ Disconnect the compressor connector (**5**) .

❑ Remove:

- the compressor bolts (**6**) ,
- the compressor.

AIR CONDITIONING

K9K

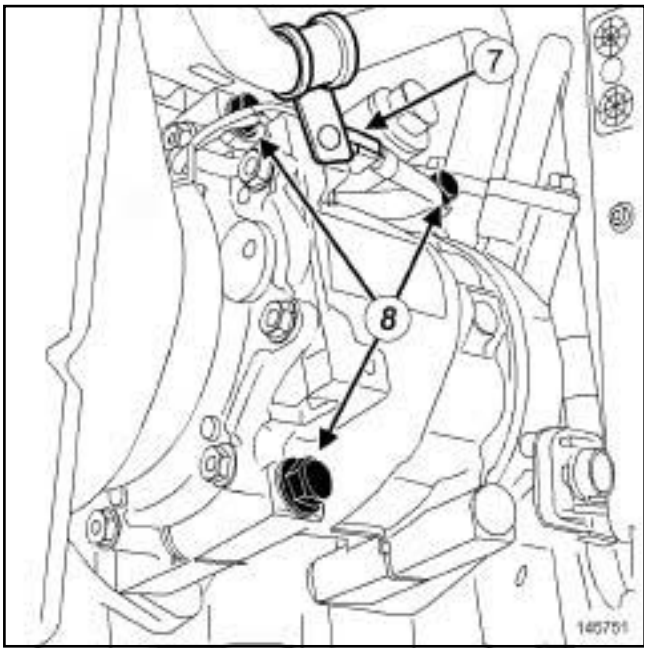

145751

❑ Disconnect the compressor connector (**7**) .

❑ Remove:

- the compressor bolts (**8**) ,
- the compressor.

REFITTING

I - REFITTING PREPARATION OPERATION

❑

> **WARNING**
> Do not remove the blanking plugs from each component until the last moment.
>
> Also, do not remove the components from their packaging until they are to be fitted to the vehicle.

❑ Check, and if necessary replace, the refrigerant pipe seals.

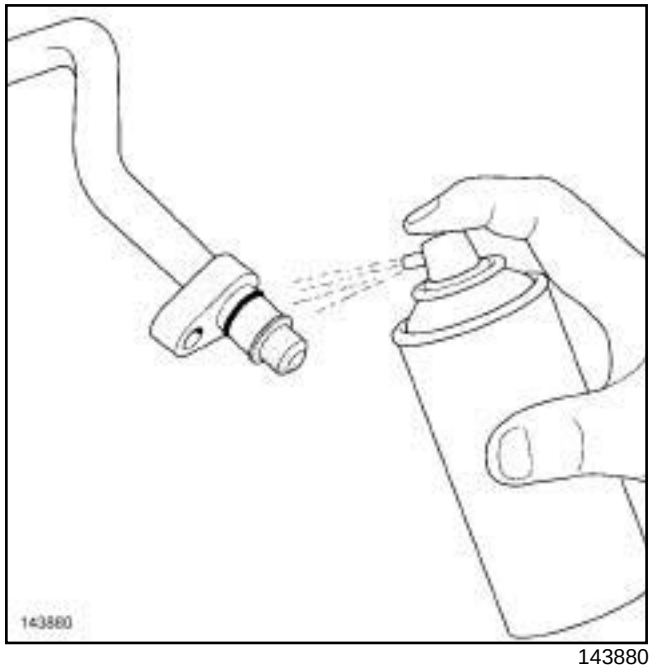

143880

❑ Clean the surface and the seal of the pipe using **ENGINE CLEANER** (see **Vehicle: Parts and consumables for the repair**) (04B, Consumables - Products).

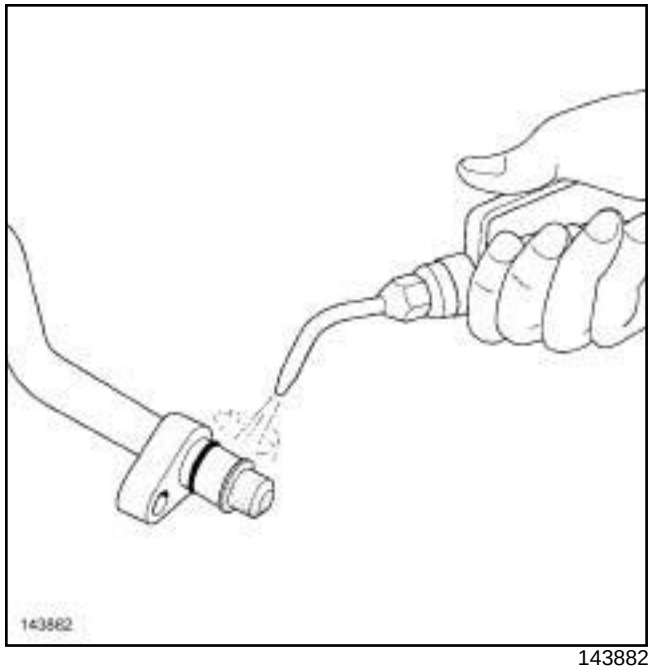

143882

❑ Use a **compressed air gun** to blow the surface and the seal of the connecting pipe.

❑ Lubricate the surface of the connecting pipe and the seal with air conditioning oil (see **62A**, **Air conditioning**, **Air conditioning: Parts and consumables for the repair**, page **62A-9**) .

❑ Remove the blanking plugs.

AIR CONDITIONING

II - REFITTING OPERATION

- Proceed in the reverse order to removal.
- Torque tighten:
  - the **compressor bolts (21 N.m)**,
  - the **pipe union bolts (8 N.m)**.

K4M

- Torque tighten the **pipe retaining bracket bolt on the compressor (21 N.m)**.

- Consult the refrigerant and oil quantity values before filling the circuit (see **62A**, **Air conditioning**, **Air conditioning: Parts and consumables for the repair**, page **62A-9**) .
- Fill the refrigerant circuit using the **refrigerant charging station** (see **Refrigerant circuit: Draining - Filling**) .
- Check that the air conditioning system is operating correctly (see **Air conditioning: Check**) .
- Check for leaks (see **Refrigerant circuit: Check**) .

AIR CONDITIONING

Equipment required
refrigerant charging station

IMPORTANT
Consult the safety instructions and cleanliness advice and the operation recommendations before carrying out any repairs (see **Air conditioning: Precautions for repair**).

WARNING
To prevent moisture from entering the system, place plugs on the cold loop components which are open to the air.

Note:
Use blanking plugs for the fuel circuits with part numbers **77 01 208 229** or **77 01 476 857** to plug any openings exposed to the open air. They must be clean. Do not use any which have already been used to plug a fuel circuit.

Location and specifications (tightening torques, parts always to be replaced, etc.) (see **62A**, **Air conditioning**, **Air conditioning: List and location of components**, page **62A-1**) .

REMOVAL

I - REMOVAL PREPARATION OPERATION

❏

WARNING
Consult the device's operating manual to avoid incorrect use.

❏ Drain the coolant circuit using the **refrigerant charging station** (see **Refrigerant circuit: Draining - Filling**) .

❏ Disconnect the battery (see **Battery: Removal - Refitting**) (80A, Battery).

K9K

❏ Remove the engine cover.

❏ Move aside the bulkhead soundproofing.

II - REMOVAL OPERATION

❏ Remove the bolts from the pipes on the expansion valve (see **62A**, **Air conditioning**, **Air conditioning: List and location of components**, page **62A-1**) .

WARNING
In order to avoid any refrigerant leaks, do not damage (deform, twist, etc.) the pipe.

❏ Disconnect the pipes from the expansion valve (see **62A**, **Air conditioning**, **Air conditioning: List and location of components**, page **62A-1**) .

❏ Fit blanking plugs on the pipe openings.

❏ Remove (see **62A**, **Air conditioning**, **Air conditioning: List and location of components**, page **62A-1**) :

- the expansion valve bolts,

- the expansion valve.

REFITTING

I - REFITTING PREPARATION OPERATION

❏

WARNING
Do not remove the blanking plugs from each component until the last moment.

Also, do not remove the components from their packaging until they are to be fitted to the vehicle.

❏ Check, and if necessary replace, the refrigerant circuit pipe seal.

AIR CONDITIONING

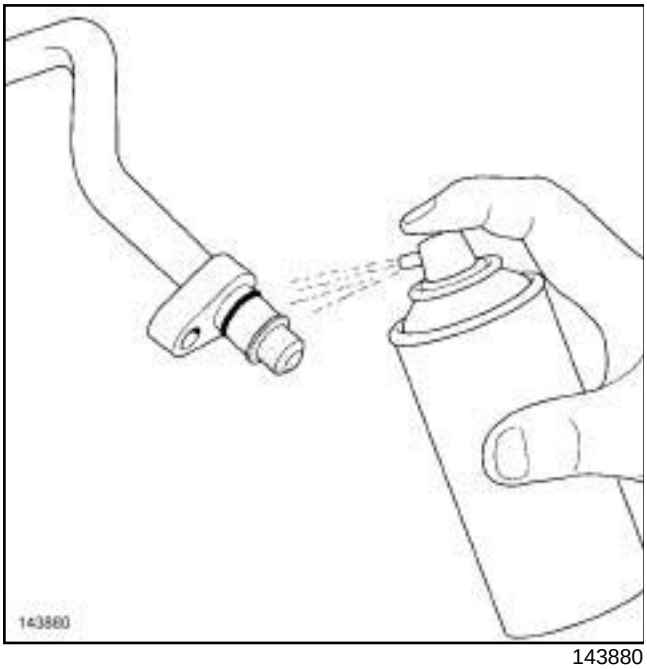

143880

- Clean the surface and the seal of the pipe using **ENGINE CLEANER** (see **Vehicle: Parts and consumables for the repair**) (04B, Consumables - Products).

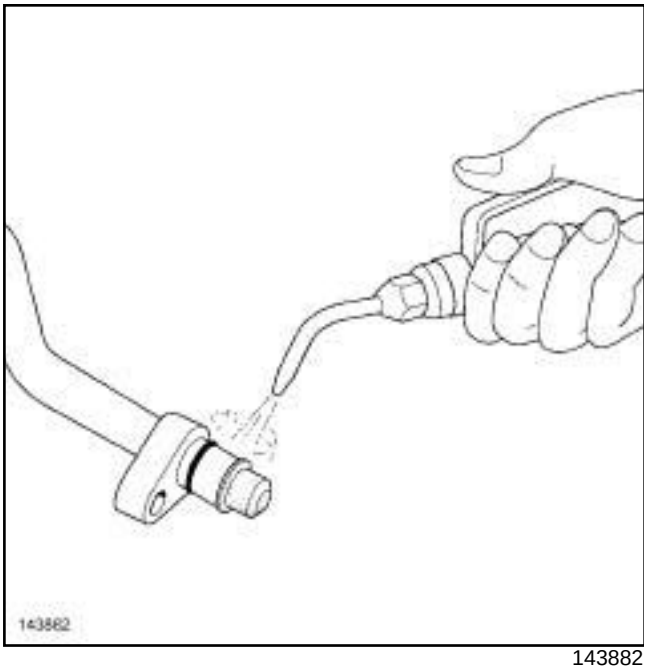

143882

- Use a **compressed air gun** to blow the surface and the seal of the connecting pipe.
- Lubricate the surface of the connecting pipe and the seal with air conditioning oil (see **62A**, **Air conditioning**, **Air conditioning: Parts and consumables for the repair**, page **62A-9**) .
- Remove the blanking plugs.

II - REFITTING OPERATION

- Proceed in the reverse order to removal.

> Note:
>
> Gradually tighten the expansion valve bolts so that the expansion valve is uniformly positioned on the pipes.

- Consult the refrigerant and oil quantity values before filling the circuit (see **62A**, **Air conditioning**, **Air conditioning: Parts and consumables for the repair**, page **62A-9**) .
- Fill the refrigerant circuit using the **refrigerant charging station** (see **Refrigerant circuit: Draining - Filling**) .
- Check that the air conditioning system is operating correctly (see **Air conditioning: Check**) .
- Check for leaks (see **Refrigerant circuit: Check**) .

Special tooling required	
Car. 1363	Set of trim removal levers.

Equipment required
refrigerant charging station
compressed air nozzle

IMPORTANT

To avoid all risk of damage to the systems, apply the safety and cleanliness instructions and operation recommendations before carrying out any repair:

- (see **Air conditioning: Precautions for the repair**) ,
- (see **Vehicle: Precautions for the repair**) (01D, Mechanical introduction).

WARNING

To prevent moisture from entering the system, place plugs on the cold loop components which are open to the air.

WARNING

Do not remove the blanking plugs from each component until the last moment.

Also, do not remove the components from their packaging until they are to be fitted to the vehicle.

Note:

Use blanking plugs for the fuel circuits with part numbers **77 01 208 229** or **77 01 476 857** to plug any openings exposed to the open air. They must be clean. Do not use any which have already been used to plug a fuel circuit.

REMOVAL

I - REMOVAL PREPARATION OPERATION

❑

WARNING

Consult the device's operating manual to avoid incorrect use.

❑ Drain the refrigerant circuit using the **refrigerant charging station** (see **Refrigerant circuit: Draining - Filling**) .

❑ Disconnect the battery (see **Battery: Removal - Refitting**) (80A, Battery).

❑ Remove the connecting pipe concerned:

- (see **Condenser - evaporator connecting pipe: Removal - Refitting**) ,
- (see **Condenser - expansion valve connecting pipe: Removal - Refitting**) ,
- (see **Rear condenser - front condenser connecting pipe: Removal - Refitting**) ,
- (see **Evaporator - dehydrator reservoir connecting pipe: Removal - Refitting**) ,
- (see **Compressor - rear condenser connecting pipe: Removal - Refitting**) ,
- (see **Condenser - evaporator connecting pipe: Removal - Refitting**) ,
- (see **Compressor - dehydrator reservoir connecting pipe: Removal - Refitting**) ,
- (see **Dehydrator reservoir - rear expansion valve connecting pipe: Removal - Refitting**) ,
- (see **Main expansion valve - additional expansion valve pipe: Removal - Refitting**) ,
- (see **Expansion valve - intermediate pipe connecting pipe at the expansion valve outlet: Removal - Refitting**) ,
- (see **Dehydrator reservoir - expansion valve connecting pipe: Removal - Refitting**) ,
- (see **Condenser - dehydrator reservoir connecting pipe: Removal - Refitting**) ,
- (see **Expansion valve - compressor connecting pipe: Removal - Refitting**) ,
- (see **Expansion valve - rear expansion valve connecting pipe: Removal - Refitting**) ,
- (see **Rear expansion valve - compressor connecting pipe: Removal - Refitting**) ,
- (see **Compressor - condenser connecting pipe: Removal - Refitting**) ,

- (see **Compressor - intermediate pipe connecting pipe: Removal - Refitting**) .

II - OPERATION FOR REMOVAL OF PART CONCERNED

❑

> **WARNING**
> To avoid damaging the surface of the air conditioning pipes when removing the seals, do not use a tool with a metallic end piece.

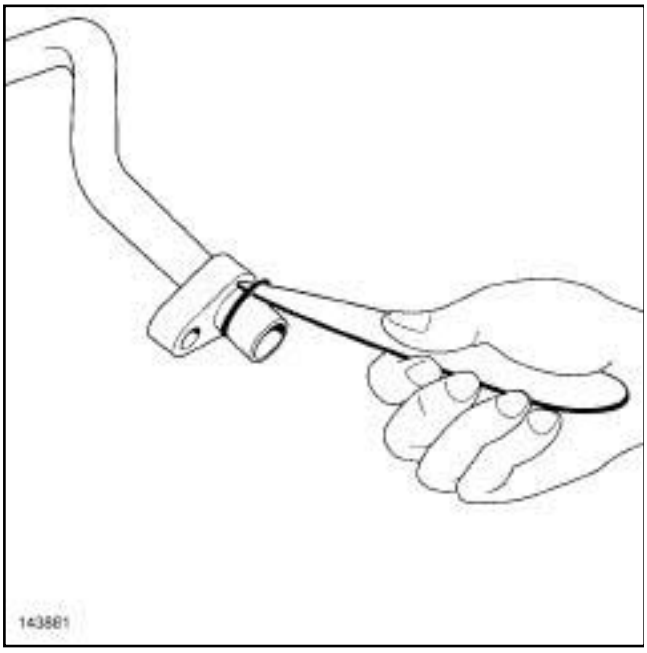

143881

❑ Remove the seal from the connecting pipe using the tool **(Car. 1363)**.

❑ Fit blanking plugs.

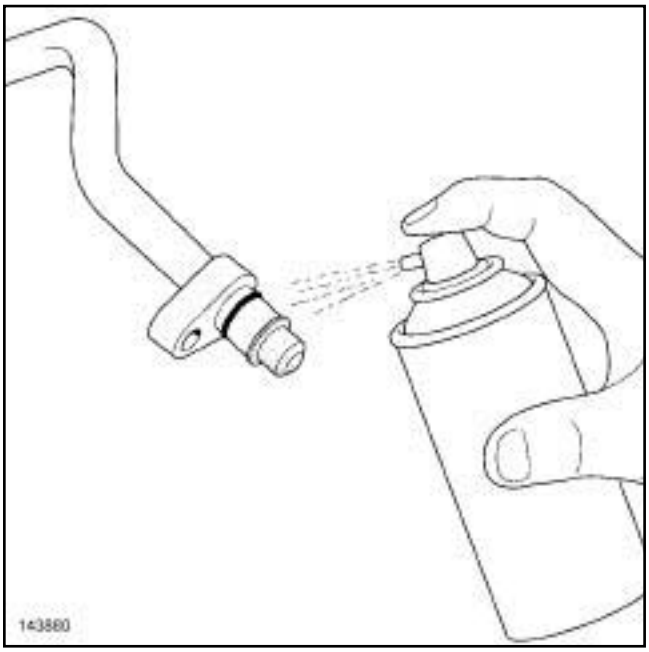

143880

❑ Clean the surface of the pipe using **ENGINE CLEANER** (see **Vehicle: Parts and consumables for the repair**) (04B, Consumables - Products).

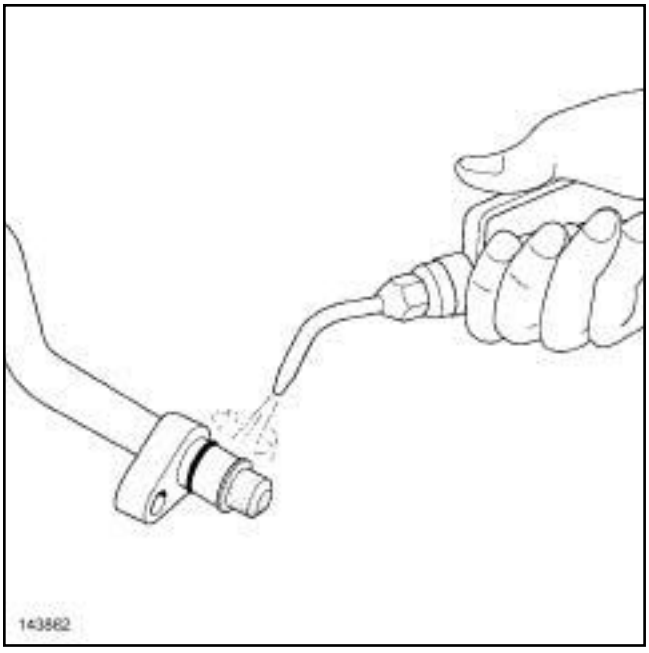

143882

❑ Use a **compressed air nozzle** to blow on the surface and the seal of the connecting pipe.

REFITTING

I - REFITTING PREPARATION OPERATION

❑ Lubricate the surface of the connecting pipe and the seal with air conditioning oil to make fitting easier (see **62A**, **Air conditioning**, **Air conditioning: Parts and consumables for the repair**, page **62A-9**) .

II - REFITTING OPERATION FOR PART CONCERNED

❑ Remove the blanking plugs.

> **WARNING**
> To avoid any leaks, check that the seal and the pipe surface are in good condition. The seal and the surface must be clean and scratch free.

❑ Refit the seal on the connecting pipe.

III - FINAL OPERATION

❑ Refit the connecting pipe concerned:

- (see **Condenser - evaporator connecting pipe: Removal - Refitting**) ,
- (see **Condenser - expansion valve connecting pipe: Removal - Refitting**) ,
- (see **Rear condenser - front condenser connecting pipe: Removal - Refitting**) ,
- (see **Evaporator - dehydrator reservoir connecting pipe: Removal - Refitting**) ,
- (see **Compressor - rear condenser connecting pipe: Removal - Refitting**) ,
- (see **Condenser - evaporator connecting pipe: Removal - Refitting**) ,
- (see **Compressor - dehydrator reservoir connecting pipe: Removal - Refitting**) ,
- (see **Dehydrator reservoir - rear expansion valve connecting pipe: Removal - Refitting**) ,
- (see **Main expansion valve - additional expansion valve pipe: Removal - Refitting**) ,
- (see **Expansion valve - intermediate pipe connecting pipe at the expansion valve outlet: Removal - Refitting**) ,
- (see **Dehydrator reservoir - expansion valve connecting pipe: Removal - Refitting**) ,
- (see **Condenser - dehydrator reservoir connecting pipe: Removal - Refitting**) ,
- (see **Expansion valve - compressor connecting pipe: Removal - Refitting**) ,
- (see **Expansion valve - rear expansion valve connecting pipe: Removal - Refitting**) ,
- (see **Rear expansion valve - compressor connecting pipe: Removal - Refitting**) ,
- (see **Compressor - condenser connecting pipe: Removal - Refitting**) ,
- (see **Compressor - intermediate pipe connecting pipe: Removal - Refitting**) .

❑ Connect the battery (see **Battery: Removal - Refitting**) (80A, Battery).

> Note:
> A summary table gives the quantities of refrigerant in the system according to the engine types (see **62A**, **Air conditioning**, **Air conditioning: Parts and consumables for the repair**, page **62A-9**) .

❑ Perform the following operations:

- refill the refrigerant circuit using the **refrigerant charging station** (see **Refrigerant circuit: Draining - Filling**) ,
- check for leaks (see **Refrigerant circuit: Check**) .

❑ Check that the air conditioning system is operating correctly (see **Air conditioning: Check**) .

AIR CONDITIONING

Equipment required
refrigerant charging station

IMPORTANT
Consult the safety instructions and cleanliness advice and the operation recommendations before carrying out any repairs (see **Air conditioning: Precautions for repair**).

WARNING
To prevent moisture from entering the system, place plugs on the cold loop components which are open to the air.

Note:
Use blanking plugs for the fuel circuits with part numbers **77 01 208 229** or **77 01 476 857** to plug any openings exposed to the open air. They must be clean. Do not use any which have already been used to plug a fuel circuit.

Location and specifications (tightening torques, parts always to be replaced, etc.) (see **62A**, **Air conditioning**, **Air conditioning: List and location of components**, page **62A-1**) .

REMOVAL

I - REMOVAL PREPARATION OPERATION

❑

WARNING
Consult the device's operating manual to avoid incorrect use.

Drain the coolant circuit using the **refrigerant charging station** (see **Refrigerant circuit: Draining - Filling**) .

❑ Disconnect the battery (see **Battery: Removal - Refitting**) (80A, Battery).

For the pipe between the expansion valve and the condenser:

❑ Position the vehicle on a two-post lift (see **Vehicle: Towing and lifting**) (02A, Lifting equipment).

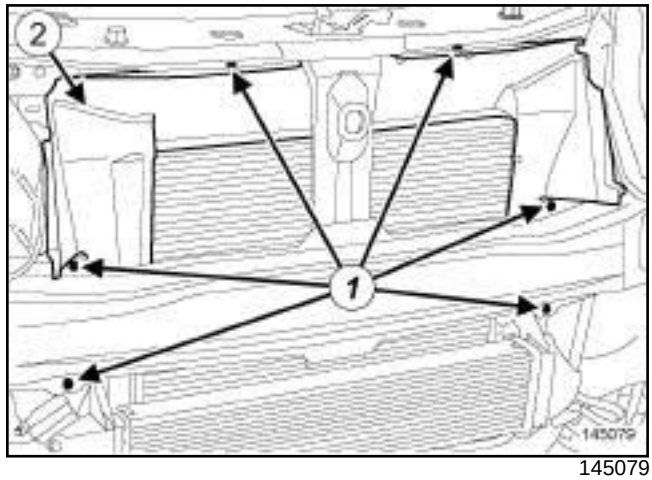

145079

❑ Remove:

- the front bumper (see **Exterior body front trim assembly: Exploded view**) and (see **Exterior body front trim assembly: Exploded view**) (55A, Exterior protection),
- the air deflector mountings (**1**) ,
- the air deflector (**2**) .

For the pipes connected to the expansion valve:

K9K

❑ Remove the front engine cover.

❑ Move aside the bulkhead soundproofing.

II - REMOVAL OPERATION

❑

WARNING
In order to avoid any refrigerant leaks, do not damage (deform, twist, etc.) the pipe.

❑ Remove the refrigerant circuit pipe (see **62A**, **Air conditioning**, **Air conditioning: List and location of components**, page **62A-1**) .

❑ Fit blanking plugs on the pipe openings.

AIR CONDITIONING

REFITTING

I - REFITTING PREPARATION OPERATION

❑

> **WARNING**
> Do not remove the blanking plugs from each component until the last moment.
>
> Also, do not remove the components from their packaging until they are to be fitted to the vehicle.

If removing and refitting the refrigerant circuit pipe:

❑ Check, and if necessary replace, the refrigerant circuit pipe seal.

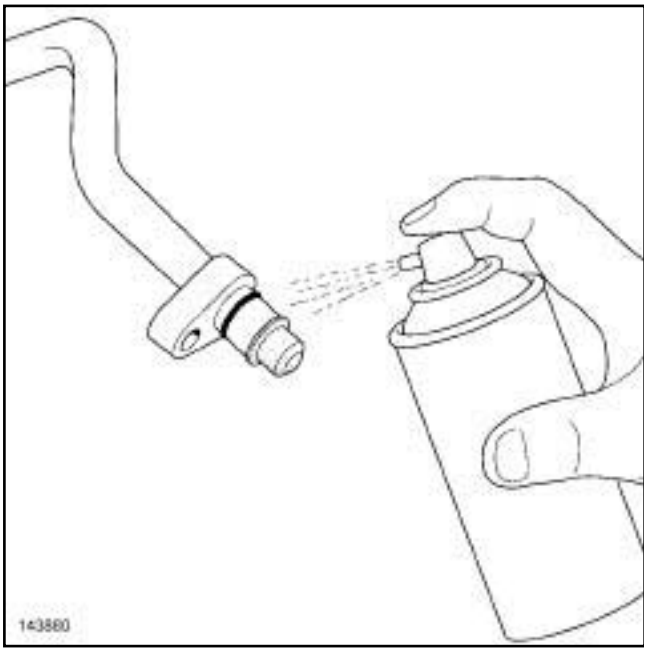

143880

❑ Clean the surface and the seal of the pipe using **ENGINE CLEANER** (see **Vehicle: Parts and consumables for the repair**) (04B, Consumables - Products).

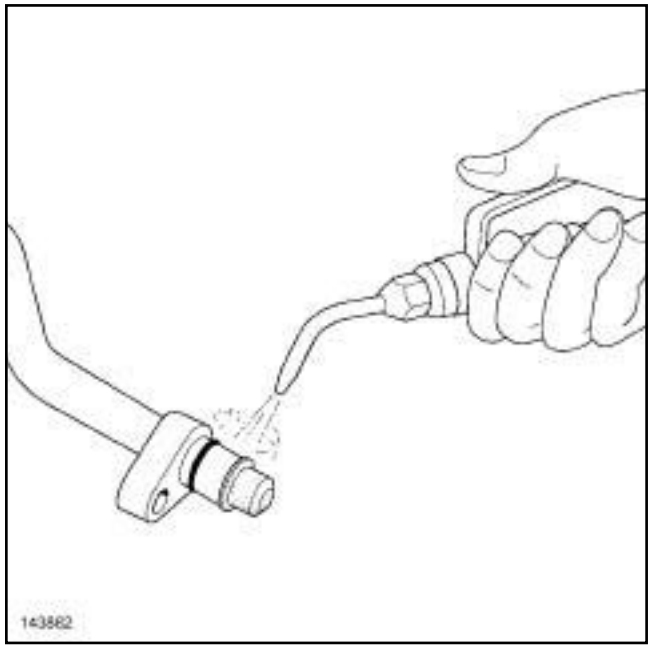

143882

❑ Use a **compressed air gun** to blow the surface and the seal of the connecting pipe.

❑ Lubricate the surface of the connecting pipe and the seal with air conditioning oil (see **62A**, **Air conditioning**, **Air conditioning: Parts and consumables for the repair**, page **62A-9**) .

❑ Remove the blanking plugs.

II - REFITTING OPERATION

❑ Proceed in the reverse order to removal.

❑ Consult the refrigerant and oil quantity values before filling the circuit (see **62A**, **Air conditioning**, **Air conditioning: Parts and consumables for the repair**, page **62A-9**) .

❑ Fill the refrigerant circuit using the **refrigerant charging station** (see **Refrigerant circuit: Draining - Filling**) .

❑ Check that the air conditioning system is operating correctly (see **Air conditioning: Check**) .

❑ Check for leaks (see **Refrigerant circuit: Check**) .

AIR CONDITIONING

Tightening torques ▽	
pressure sensor	**9 N.m**

REMOVAL

I - REMOVAL PREPARATION OPERATION

❑ Disconnect the battery (see **Battery: Removal - Refitting**) (MR 388, 80A, Battery).

❑ Remove:

- the engine cover,
- the air intake sleeve.

II - OPERATION FOR REMOVAL OF PART CONCERNED

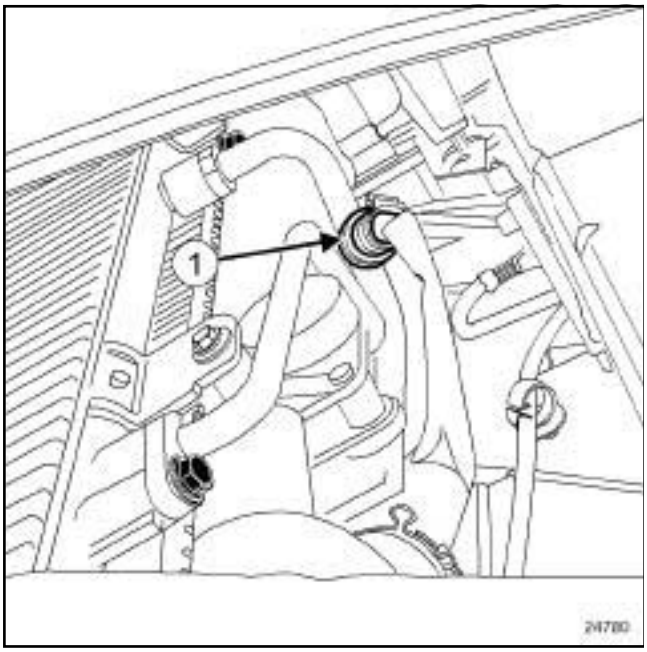

24780

❑ Disconnect the pressure sensor.

> Note:
>
> An automatic shut-off valve isolates the circuit from the outside during removal; do not drain the refrigerant from the circuit.

❑ Remove the pressure sensor (**1**) .

REFITTING

I - REFITTING OPERATION FOR PART CONCERNED

❑ Refit the pressure sensor.

❑ Torque tighten the **pressure sensor (9 N.m)**.

❑ Connect the pressure sensor.

II - FINAL OPERATION.

❑ Refit:

- the air inlet sleeve,
- the engine cover.

❑ Connect the battery (see **Battery: Removal - Refitting**) (MR 388, 80A, Battery).

DUSTER

6 Air conditioning

62C CLIMATE CONTROL

Fault finding – Introduction	62C - 2
Fault finding – List and location of components	62C - 9
Fault finding – Role of components	62C - 11
Fault finding – Operating diagram	62C - 17
Fault finding – Function	62C - 18
Fault finding – Conformity check	62C - 24
Fault finding – Customer complaints	62C - 34
Fault finding – Fault finding chart	62C - 36

V1 Edition Anglaise

"The repair procedures given by the manufacturer in this document are based on the technical specifications current when it was prepared.

The procedures may be modified as a result of changes introduced by the manufacturer in the production of the various component units and accessories from which his vehicles are constructed."

All rights reserved by Renault s.a.s.

Copying or translating, in part or in full, of this document or use of the service part reference numbering system is forbidden without the prior written authority of Renault s.a.s.

© Renault s.a.s. 2009

1. SCOPE OF THIS DOCUMENT

This document presents the fault finding procedure applicable to all computers with the following specifications:

Vehicle(s): **DUSTER**
Function concerned: **Climate Control**

2. PREREQUISITES FOR FAULT FINDING

Documentation type

Fault finding procedures (this document and the Technical Notes concerning the injection system fitted to the vehicle, and the UCH):
– Assisted fault finding (integrated into the **diagnostic tool**), Dialogys.
Wiring Diagrams:
– Visu-Schéma (CD-ROM), paper.

Type of diagnostic tools
– CLIP + CAN sensor

Special tooling required

	Special tooling required
	Multimeter
Elé. 1681	Universal bornier

3. REMINDERS

Procedure

To run fault finding on the vehicle computers, proceed as follows:
– turn the ignition key to APC,
– connect the **diagnostic tool** and perform the required operations,

To cut off the + after ignition feed, proceed as follows:
– disconnect the **diagnostic tool**,
– turn the ignition key to OFF,
– switch off the ignition.

Faults

Faults are declared present or stored (depending on whether they appeared in a certain context and have disappeared since, or whether they remain present but are not diagnosed within the current context).
The **present** or **stored** status of the fault should be considered when the diagnostic tool is switched on after the + after ignition feed is switched on (without any action on the system components).

For a **present fault**, apply the procedure described in the **Interpretation of faults** section.
For a **stored fault**, note the faults displayed and apply the **Notes** section.
If the fault is **confirmed** when the instructions are applied, the fault is present. Deal with the fault.

If the fault is **not confirmed**, check:
- the electrical lines which correspond to the fault,
- the connectors on these lines (corrosion, bent pins, etc.),
- the resistance of the faulty component,
- the condition of the wires (melted or split insulation, wear).

Conformity check

The aim of the conformity check is to check data that does not produce a fault on the **diagnostic tool** when the data is inconsistent. Therefore, this stage is used to:

- carry out fault finding on faults that do not have a fault display, and which may correspond to a customer complaint,
- check that the system is operating correctly and that there is no risk of a fault recurring after repairs.

This section gives the fault finding procedures for statuses and parameters and the conditions for checking them.
If a status is not behaving normally or a parameter is outside the permitted tolerance values, consult the corresponding fault finding page.

Special notes on the conformity check for the air conditioning function:

The **air conditioning system** conformity check is divided into four parts. The parts relate to the four sub-functions of the air conditioning system: heating, cold loop, user selection and passenger compartment ventilation. The statuses and parameters related to these sub-functions are listed with their respective computers.

Special notes: The air conditioning control panel does not control electrical components (other than the passenger compartment fan assembly) and it cannot support fault finding.

Note:
The interpretation of statuses, parameters and commands is also split into several sections. Everything controlled by the air conditioning control panel is explained in the two **Air conditioning** sections (**62B and 62C**). On the other hand, signals from other computers are explained in the fault finding sections for these computers (see **conformity check**).

Customer complaints - Fault finding chart

If the test with the **diagnostic tool** is OK but the customer complaint is still present, the fault should be processed by **customer complaints**.

A synopsis of the general procedure to follow is provided on the following page in the form of a flow chart.

4. FAULT FINDING PROCEDURE

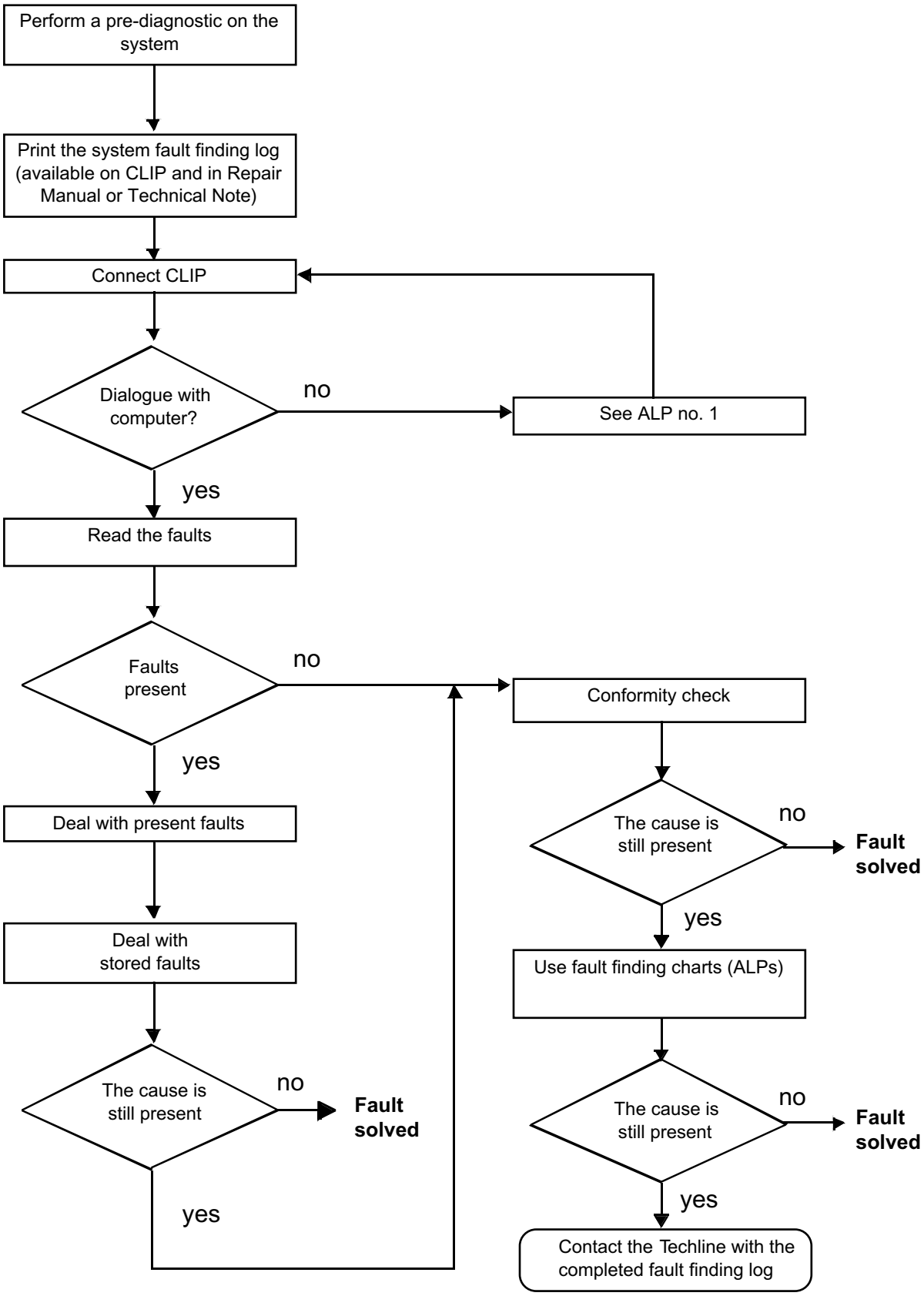

4. FAULT FINDING PROCEDURE (continued)

Wiring check

Note:
Carry out each requested check visually. Do not remove a connector if it is not required.

Note:
Repeated connections and disconnections alter the functionality of the connectors and increase the risk of poor electrical contact. Limit the number of connections/disconnections as much as possible.

Note:
The check is carried out on the 2 parts of the connection. There may be two types of connection:
– Connector / Connector
– Connector / Device

Fault finding problems
Disconnecting the connectors and/or manipulating the wiring may temporarily remove the cause of a fault. Electrical measurements of voltage, resistance and insulation are generally correct, especially if the fault is not present when the analysis is made (stored fault).

Visual inspection of the connection:
- Check that the connector is connected correctly and that the male and female parts of the connection are correctly coupled.

Visual inspection of the area around the connection:
- Check the condition of the mounting (pin, strap, adhesive tape, etc.), that the connectors are attached to the vehicle.
- Check that there is no damage to the wiring trim (sheath, foam, adhesive tape, etc.) near the wiring.
- Check that there is no damage to the electrical wires at the connector outputs, in particular on the insulating material (wear, cuts, burns, etc.).

Disconnect the connector to continue the checks.

Visual inspection of the plastic casings:
- Check that there is no mechanical damage (casing crushed, cracked, broken, etc.), in particular to the fragile components (lever, lock, openings, etc.).
- Check that there is no heat damage (casing melted, darker, deformed, etc.).
- Check that there are no stains (grease, mud, liquid, etc.).

Visual inspection of the metal contacts:
(The female contact is called CLIP. The male contact is called TAB).
- Check that there are no bent contacts (the contact is not inserted correctly and can come out of the back of the connector). The spring contact of the connector when pulling the wire slightly.
- Check that there is no damage (folded tabs, clips open too wide, blackened or melted contact, etc.).
- Check that there is no oxidation on the metal contacts.

Visual inspection of the sealing:
(Only for watertight connectors)

- Check for the seal on the connection (between the 2 parts of the connection).
- Check the seal at the back of the connectors:
  - For *unit* joints (1 for each wire), check that the unit joints are present on each electrical wire and that they are correctly positioned in the opening (level with the housing). Check that plugs are present on openings which are not used.
  - For a *grommet* seal (one seal which covers the entire internal surface of the connector), check that the seal is present.
  - For *gel* seals, check for gel in all of the sockets without removing the excess or any protruding sections (it does not matter if there is gel on the contacts).
  - For *hotmelt* sealing (heat-shrink sheath with glue), check that the sheath has contracted correctly on the rear of the connectors and electrical wires, and that the hardened glue comes out of the side of the wire.
- Check that there is no damage to any of the seals (cuts, burns, significant deformation, etc.).

If a fault is detected, repair or replace the wiring (see **Technical Note 6015A, Electrical wiring repair, Wiring: Precautions for repair**)

5. FAULT FINDING LOG

IMPORTANT!

IMPORTANT
Any fault on a complex system requires thorough fault finding with the appropriate tools.
The FAULT FINDING LOG, which should be completed during the fault finding procedure, ensures a record is kept of the procedure carried out. It is an essential document when consulting the manufacturer.

IT IS THEREFORE ESSENTIAL THAT THE FAULT FINDING LOG IS FILLED OUT EVERY TIME IT IS REQUESTED BY TECHLINE OR THE WARRANTY RETURNS DEPARTMENT.

You will always be asked for this log:

- when requesting technical assistance from Techline,
- for approval requests when replacing parts for which approval is mandatory,
- to be attached to monitored parts for which reimbursement is requested. The log is needed for warranty reimbursement, and enables better analysis of the parts removed.

6. SAFETY INSTRUCTIONS

Safety rules must be observed during any work on a component to prevent any material damage or personal injury:

– check the battery voltage to avoid incorrect operation of computer functions,
– do not smoke,
– use the proper tools.

System (cold loop, hot loop and components)

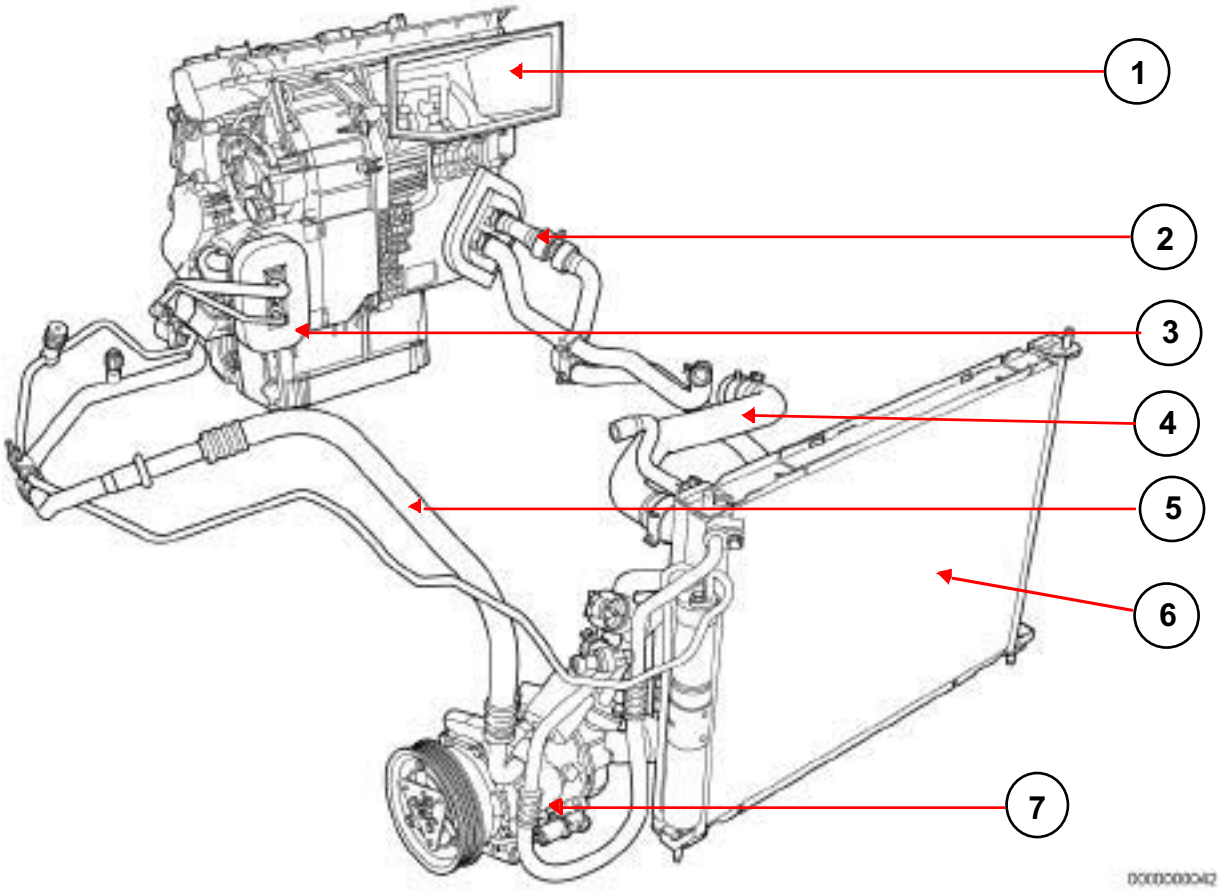

1) **Air conditioning unit**
2) **Heater matrix**
3) **Expansion valve and evaporator**
4) **Coolant circuit**
5) **Cold loop**
6) **Condenser and radiator**
7) **Compressor**

- **COLD LOOP COMPONENTS:**

– **Compressor**: This is located at the bottom on the left-hand side, next to the radiator in the engine compartment.

– **Condenser:** This is located between the radiator and the cooling fan assembly.

– **Dehydrator reservoir**: This is located on the left-hand side of the condenser outlet.

– **Heating and air conditioning assembly**: This is located underneath the dashboard.

– **Thermostatic expansion valve**: This is located to the left of the heating and air conditioning assembly on the bulkhead.

– **Evaporator**: This is located to the right of the **thermostatic expansion valve** in the heating and air conditioning assembly.

– **High pressure pipe**: This pipe connects the compressor, condenser, dehydrator reservoir and expansion valve inlet in series (it is located in the engine compartment on the left-hand side).

– **Low pressure pipe**: This pipe connects the expansion valve, buffering capacity, evaporator and compressor inlet in series (it is located in the engine compartment on the left-hand side).

- **HEATING COMPONENTS**

– **Heater matrix:** This is located at the bottom of the heating and air conditioning assembly.

– **Heating resistors**: These are located at the bottom of the heater matrix on the driver's side (depending on the equipment).

- **ACTUATORS:**

– **Air distribution flap:** This is located in the heating and air conditioning assembly.

– **Mixing flap:** This is located in the heating and air conditioning assembly.

– **Recirculation flap**: This is located behind the dashboard.

- **OTHERS**

– **Passenger compartment fan assembly:** This is located in the heating and air conditioning assembly.

– **Cooling fan assembly:** This is located in the front panel of the vehicle, in front of the condenser.

– **Air pipes**: These are located underneath the dashboard.

- **COLD LOOP COMPONENTS**

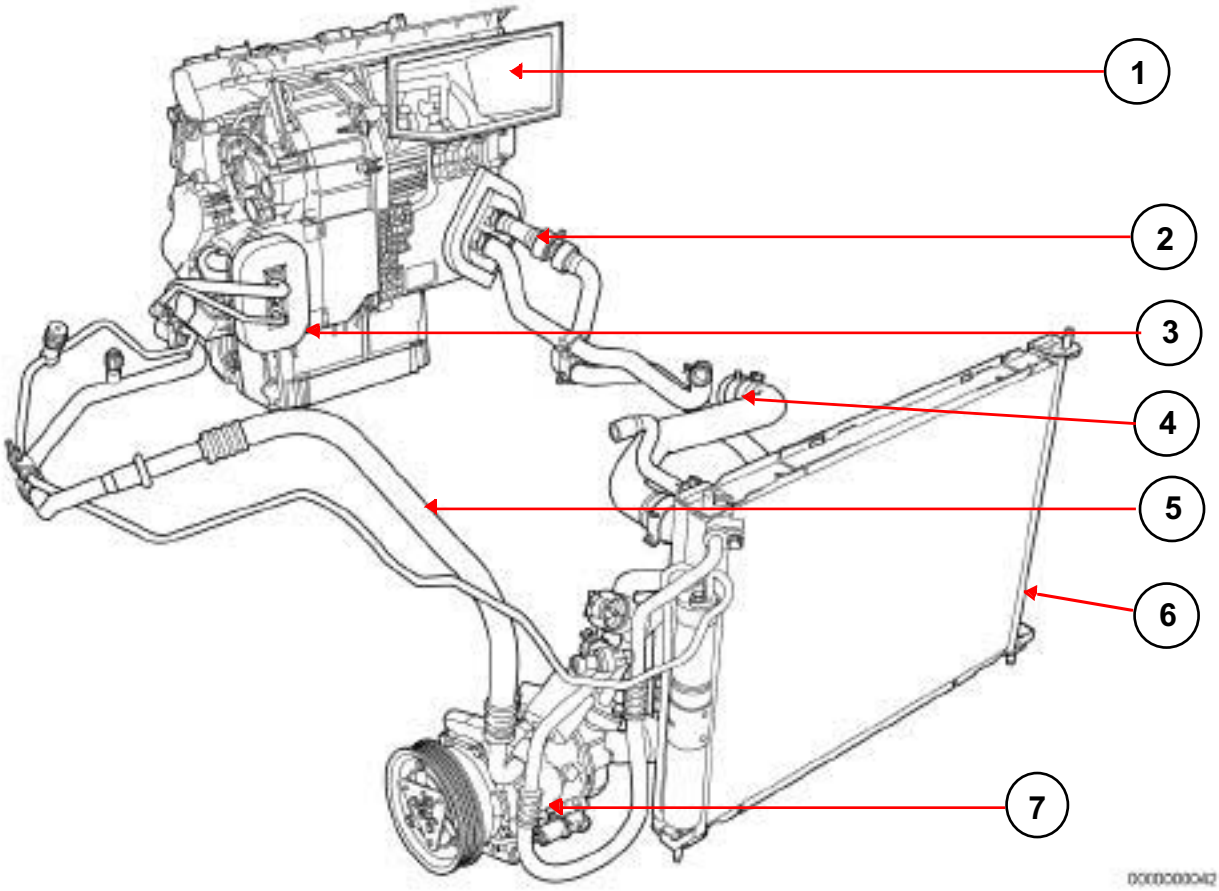

System assembly

1) **Air conditioning unit**
2) **Heater matrix**
3) **Expansion valve and evaporator**
4) **Coolant circuit**
5) **Cold loop**
6) **Condenser and radiator**
7) **Compressor**

Figure 1: System assembly

– Compressor:

The compressor is not activated when the exterior temperature is less than **3˚C**, it is used to compress the refrigerant into gas. The pressure can reach up to **28 bar**.

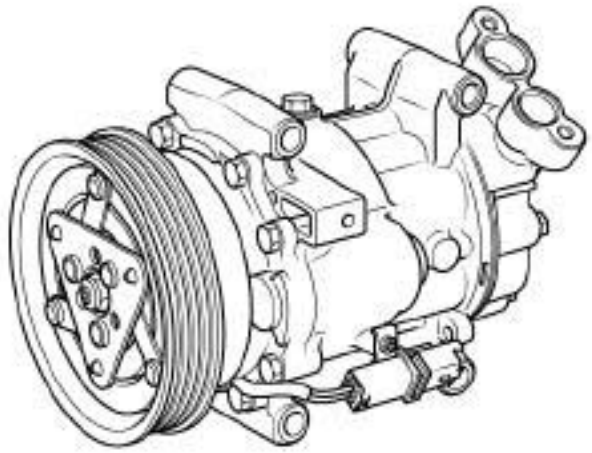

– Condenser:
The condenser is composed of flat horizontal aluminium tubes. The pipes are divided by the vanes in order to increase the air heat exchange and therefore cool the refrigerant fluid to produce condensation.

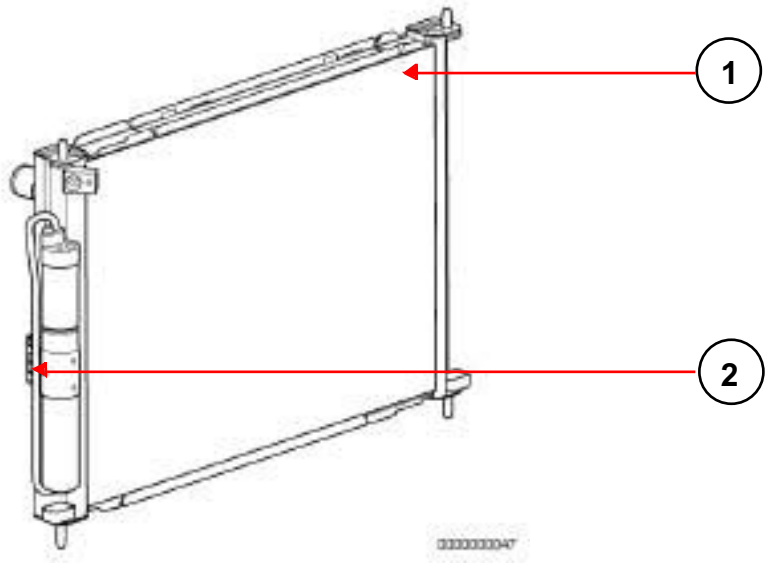

1) **Condenser**
2) **Dehydrator reservoir**

– Dehydrator reservoir: (see figure above)

The dehydrator reservoir is used to:
- Check the condition of the refrigerant.
- Absorb the variations in volume (expansion bottle principle).
- Filter impurities.
- Absorb moisture (water in the circuit).

– Heating and air conditioning assembly: (see figure above)

This unit acts as an air mixing box. It is equipped with a system of flaps which allow the air to be directed in accordance with the requirements of the occupants whilst simultaneously allowing the temperature of the air entering the passenger compartment to be modified by mixing hot and cold air.

– Thermostatic expansion valve: (see figure below)

This thermostatic-type expansion valve is used to check refrigerant expansion. It is located at the evaporator inlet.

– Evaporator: (see figure below)

- The evaporator is a heat exchanger which enables the air entering the passenger compartment to be cooled.

Note: Condensation of the air may occur thereby causing normal drops of water to form underneath the vehicle body.

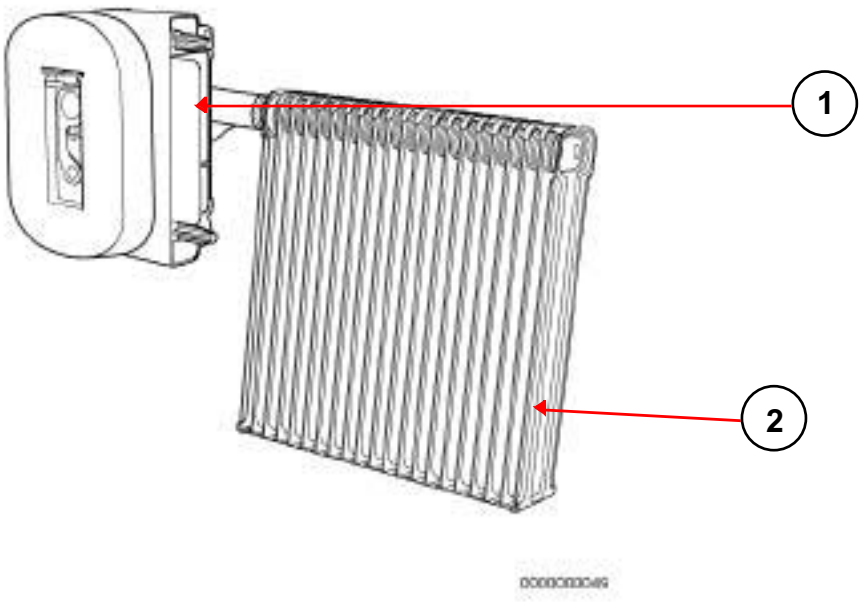

1) Expansion valve
2) Evaporator

– High and low pressure pipes:

- The **High Pressure** and **Low Pressure** pipes are composed of rigid aluminium pipes and flexible pipes which enable engine-related movements to be absorbed.
- Two filler valves (on the **High Pressure** pipe and on the **Low Pressure** pipe) can be accessed in order to fill (or drain) the refrigerant loop.
- The connections must be checked in the event of a refrigerant fluid leak.

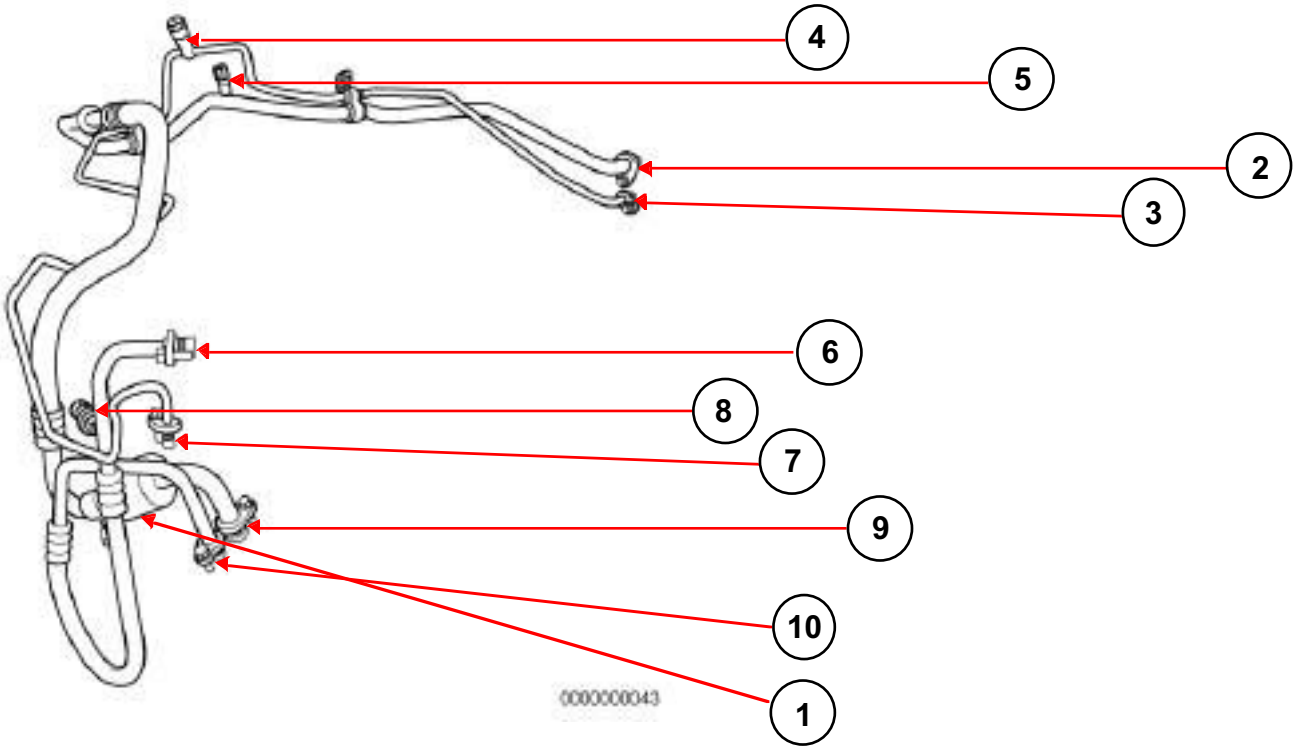

1) Buffering capacity
2) Expansion valve outlet
3) Expansion valve inlet
4) High pressure filler valve
5) Low pressure filler valve
6) Condenser inlet
7) Condenser outlet
8) Pressure sensor
9) Compressor inlet
10) Compressor outlet

Figure 6: Cold loop pipes

- **HEATING COMPONENTS**

– Heater matrix:
The external air entering the heating and air conditioning system (**HVAC**) is heated by the **heater matrix**.

– Passenger compartment heating resistors (depending on the equipment level):
The passenger compartment heating resistors (RCH) are electrical heating devices in the air conditioning unit. This system is an additional heating system which operates when the engine is cold (when starting).

- **ACTUATORS**

– Air distribution flap:

This flap enables the air flowing into the passenger compartment to be directed.

– Air mixing flap:

This flap mixes the air in order to meet the temperature requirements of the occupants.

– Recirculation flap:

This flap prevents the entry of exterior air. In this case, the passenger compartment is isolated from the exterior and air is blown in the passenger compartment in a closed circuit.

These three flaps are **controlled by a cable**.

- **OTHERS**

– Passenger compartment blower unit:

The passenger compartment fan assembly is controlled by the Resistive Blower Dimmer Module (**MVPR**).

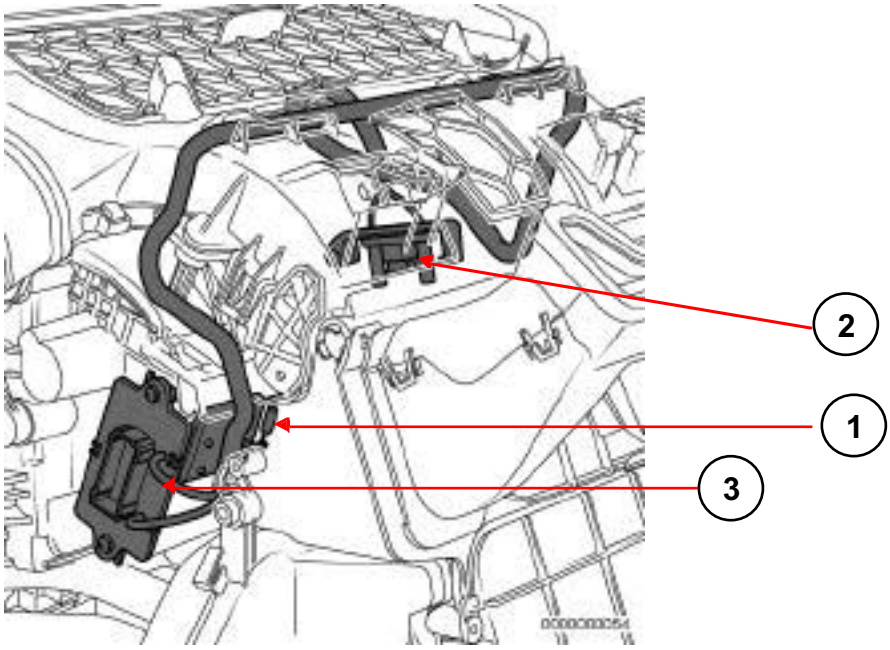

Resistive Blower Dimmer Module (MVPR)

1) **Thermal fuse**
2) **Fan assembly connector**
3) **Connector to Control panel**

The passenger compartment fan assembly is used to vary the rate at which air is blown into the passenger compartment, depending on the requirements of the customer.

– Cooling fan assembly:

The cooling fan assembly motor is normally used in order to promote heat exchange in the condenser and therefore improve the performance of the air conditioning system. Activation of the air conditioning fan unit depends, among other things, on the vehicle speed and high pressure in the loop.

– Air pipes:

The air flows into an open air inlet scoop towards the exterior. Therefore there must be enough air flow for it to be channelled into the passenger compartment. This flow can be created by the vehicle speed (in non-recirculation mode) or by activating the blower. The air flowing into the passenger compartment is protected by a grille and a rain shield in order to prevent foreign bodies and water from entering. The air is then distributed inside the passenger compartment.

Summary diagram of all the components of the air conditioning system

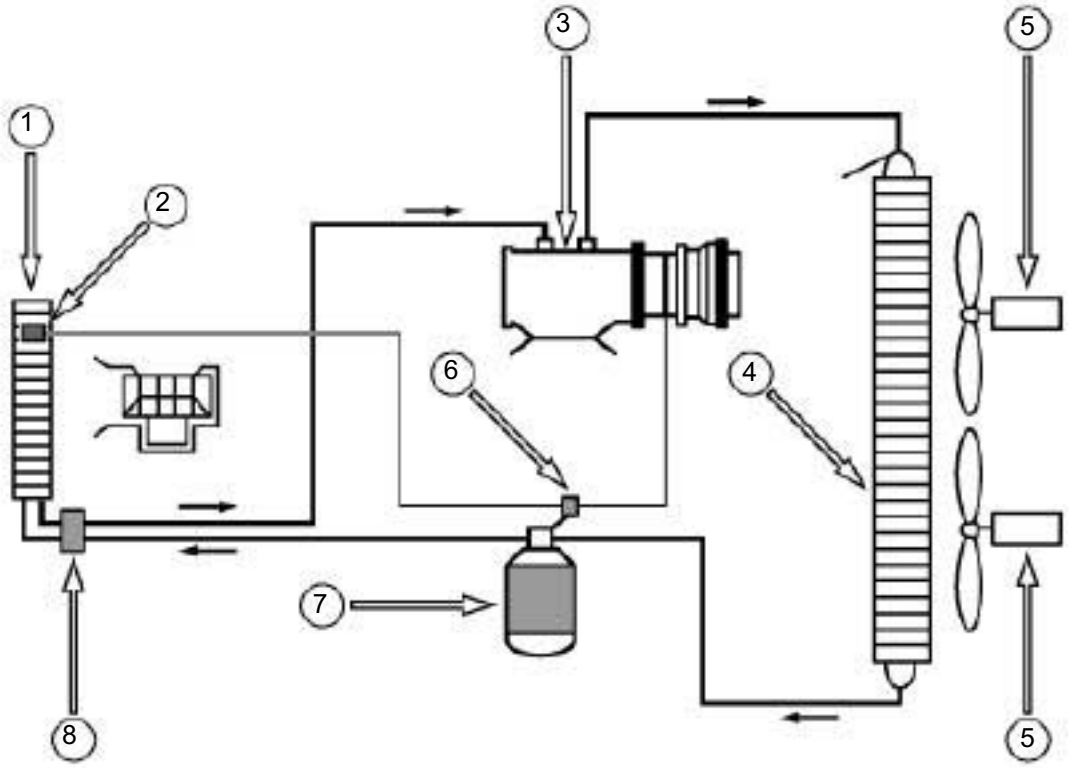

0000000058

1) **Evaporator**
2) **Temperature sensor**
3) **Compressor**
4) **Condenser**
5) **Fan assembly**
6) **Pressure switch**
7) **Dehydrator reservoir**
8) **Expansion valve**

Layout of the air conditioning function:

The functions provided by the system are the thermal comfort of the occupants (warming and cooling), visibility through the windscreen, as well as the isolation of the passenger compartment in case of exterior air pollution. The heating and air conditioning system dries and purifies the air in the passenger compartment. Only manual heating and air conditioning is available for **DUSTER**.

The injection computer controls the passenger compartment heating resistors (depending on the equipment). It authorises or denies compressor activation depending on the vehicle operation and refrigerant pressure.

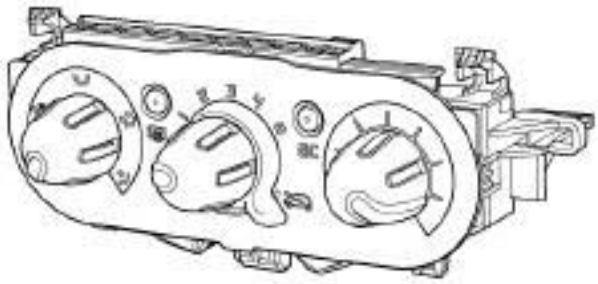

Manual air conditioning system control panel: front panel

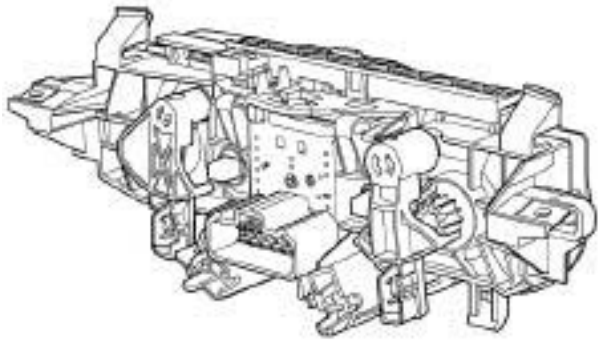

Manual air conditioning system control panel: rear panel

Buttons with operation indicator lamps:
- Air conditioning button.

Manual controls:
- Mixing: rotary control on the right-hand side, with cable connection to the flap.
- Distribution: rotary control on the left-hand side, with cable connection to the flap.
- Recirculation: rotary lever in the centre, with cable connection to the flap.
- Air flow V0, V1 to V4 by rotary control in the centre.

Description of the sub-functions:

Heating sub-function: this sub-function includes everything relating to the **production of warm air** in the vehicle and management of the heated rear screen.

The UCH computer controls the rear screen de-icing.
The injection computer manages the actuation of the passenger compartment heating resistors

Cold loop sub-function: this sub-function includes everything involved in the vehicle's **production of cold air**.

The computers concerned include:
The injection computer, which authorises compressor activation and controls the compressor and motor-driven fan assemblies.

The UCH, which authorises or denies the request for compressor activation from the air conditioning control panel to the injection computer in accordance with the condition of the passenger compartment blower and the exterior temperature (depending on the equipment).

User selection sub-function: This sub-function includes everything used to transmit the user's requests (pressing buttons). The computer involved is the UCH computer.

Exchanges between the two air conditioning computers (manual air conditioning)

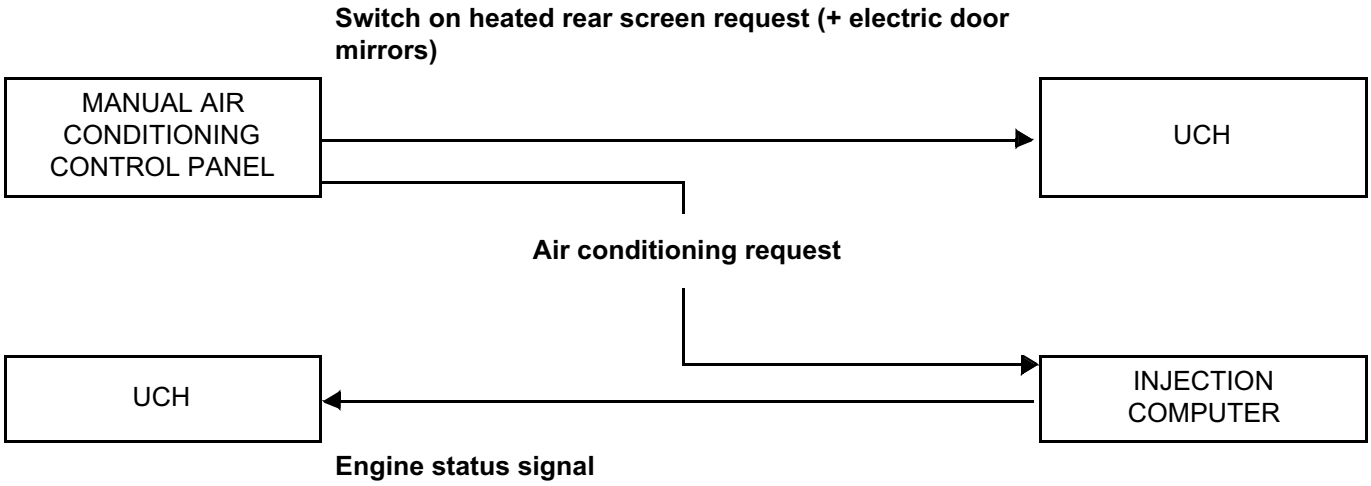

Summary of components controlled or managed by the MANUAL AIR CONDITIONING control panel:

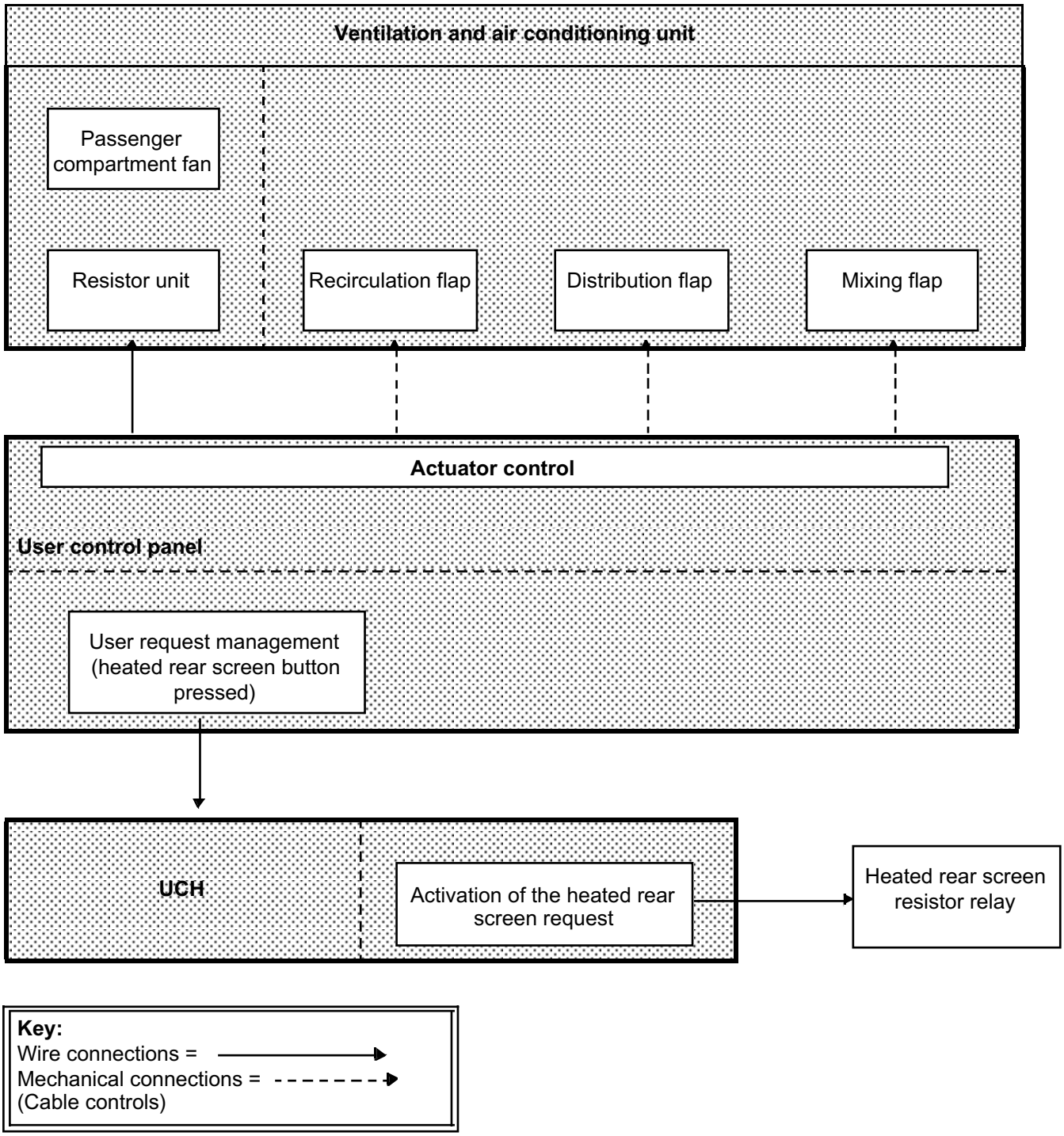

Summary diagram of components controlled or managed by the UCH:

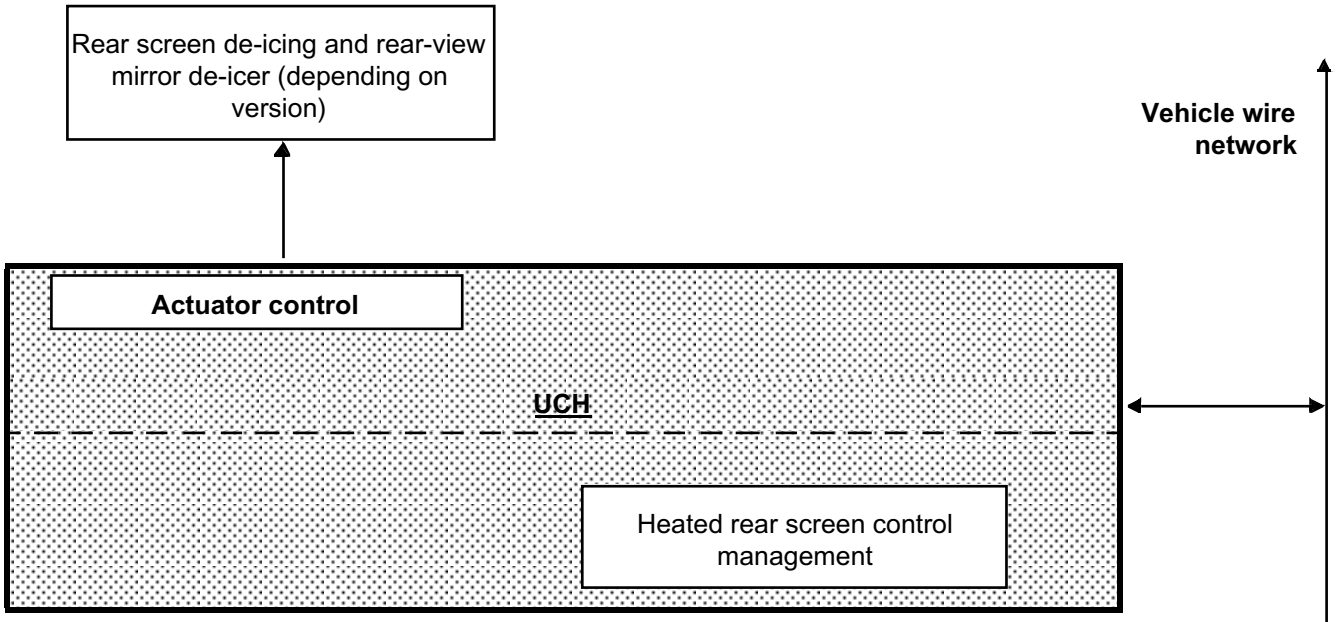

Summary diagram of components controlled or managed by the injection computer:

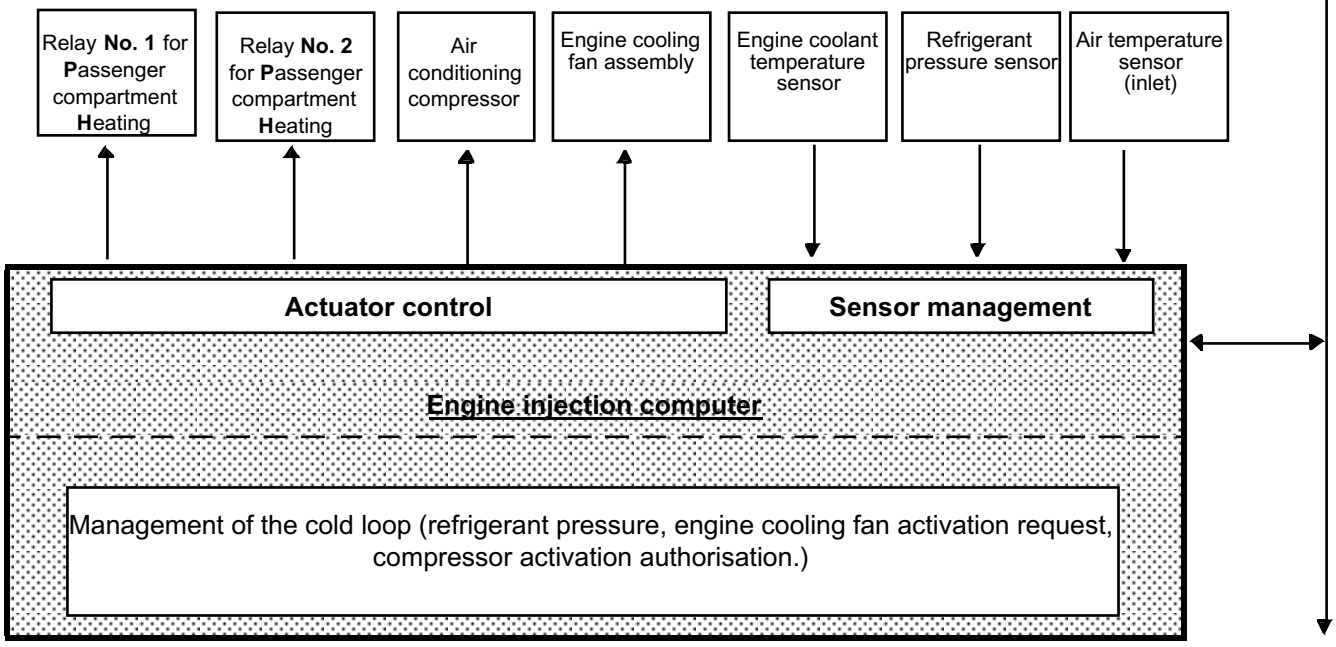

Key:
Wire connections = ⟶

Compressor control flowchart:

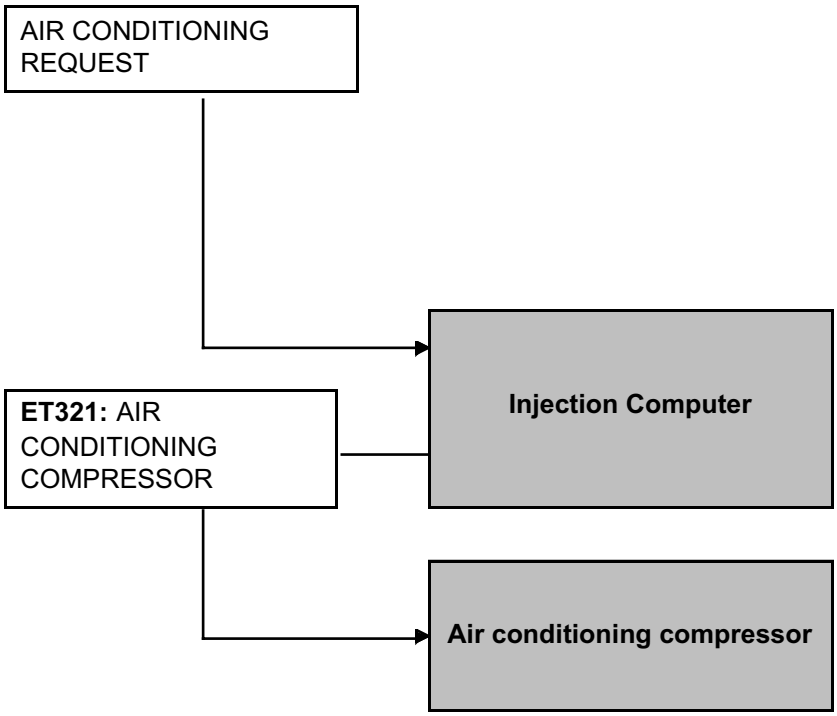

Key:

→ **: Wire connections**

Special notes:
This flowchart shows the tracks of the compressor engagement request.

If the compressor does not engage (one of the requests is not transmitted): carry out a conformity check.

NOTES	Only carry out this conformity check after a **complete check** with the **diagnostic tool** (fault reading and configuration checks). **Application conditions:** Engine stopped, ignition on, **AIR CONDITIONING SWITCHED OFF** (Passenger compartment blower unit switched off and air conditioning compressor not activated). **Note:** Read the parameters when the vehicle is cold (in the morning) to check the conformity of the temperature parameters (without thermometer). The two temperatures should be approximately equal (interior, exterior and engine coolant).

SUB-FUNCTION: COLD LOOP

Computer	Parameter or Status Checked or Action	Display and notes	Fault finding
UCH	**ET091:** Engine running	**NO**	In the event of a fault, refer to the **interpretation of this status**.
Injection	**ET321:** Air conditioning compressor	**INACTIVE**	If the status displays **ACTIVE**, refer to the **interpretation of this status**.
	PR037: Refrigerant pressure	**1 bar < X < 15 bar**	If there is a fault, refer to the **interpretation of this parameter.**
	PR055 or **PR145:** Engine speed (depending on version)	**0 rpm**	If there is a fault, refer to the **interpretation of this parameter.**
	PR064: Coolant temperature	**X = coolant temperature of the engine**	If there is a fault, refer to the **interpretation of this parameter.**
	PR089 or **PT155:** Vehicle speed (depending on version)	**0 mph**	If there is a fault, refer to the **interpretation of this parameter.**

NOTES	Only carry out this conformity check after a **complete check** with the **diagnostic tool** (fault reading and configuration checks). **Application conditions:** Engine stopped, ignition on, **AIR CONDITIONING SWITCHED OFF** (Passenger compartment blower unit switched off and air conditioning compressor not activated). **Note:** Read the parameters when the vehicle is cold (in the morning) to check the conformity of the temperature parameters (without thermometer). The two temperatures should be approximately equal (interior, exterior and engine coolant).

SUB-FUNCTION: COLD LOOP (CONTINUED)

Computer	Parameter or Status Checked or Action	Display and notes	Fault finding
Injection	**PR125:** Power absorbed by the AC* compressor	**0 W (ambient tº = 23ºC)**	If there is a fault, refer to the **interpretation of this parameter.**
	ET298: Low-speed fan assembly	**INACTIVE**	In the event of a fault, refer to **the interpretation of this status**.
	ET299: High-speed fan assembly	**INACTIVE**	In the event of a fault, refer to **the interpretation of this status**.
	ET018: Air conditioning request	**INACTIVE / NO**	In the event of a fault, refer to **the interpretation of this status**.

*AC: Air conditioning

NOTES	Only carry out this conformity check after a **complete check** with the **diagnostic tool** (fault reading and configuration checks). **Application conditions:** Engine stopped, ignition on, **AIR CONDITIONING SWITCHED OFF** (Passenger compartment blower unit switched off and air conditioning compressor not activated).

SUB-FUNCTION: HEATING

Computer	Parameter or Status Checked or Action	Display and notes	Fault finding
UCH	**PR001:** Battery voltage	**10.5 V < X < 14.4 V**	If there is a fault, refer to the **interpretation of this parameter** If the fault is still present, carry out a check of the charging circuit.
	ET004: +12 V after ignition	**PRESENT**	If there is a fault, see **the interpretation of this parameter**
Injection	**PR064:** Coolant temperature	**X = engine coolant temperature**	If there is a fault, see **the interpretation of this parameter**
	ET111: RCH number set	**NO** **Note: Depending on the requirements of the injection system (power requirement, torque reduction, etc.), the injection computer sets the controlled passenger compartment heating resistor stage number (no more, no less)**	In the event of a fault, refer to **the interpretation of this status**.
	ET112: Passenger compartment heating resistor cut-off	**YES**	In the event of a fault, refer to **the interpretation of this status**.

NOTES	Only carry out this conformity check after a **complete check** with the **diagnostic tool** (fault reading and configuration checks). **Application conditions:** Engine stopped, ignition on, **AIR CONDITIONING SWITCHED OFF** (Passenger compartment blower unit switched off and air conditioning compressor not activated).

SUB-FUNCTION: USER SELECTION

Computer	Parameter or Status Checked or Action	Display and notes	Fault finding
UCH	**ET547:** Rear de-icing button	**PRESSED / RELEASED**	In the event of a fault, refer to **the interpretation of this status**.

NOTES	Only carry out this conformity check after a **complete check** with the **diagnostic tool** (fault reading and configuration checks). **Application conditions: Engine at idle speed, AIR CONDITIONING OPERATING** (air conditioning compressor engaged).

SUB-FUNCTION: COLD LOOP

Computer	Parameter or Status Checked or Action	Display and notes	Fault finding
UCH	**ET091: Engine running**	**YES**	In the event of a fault, refer to **the interpretation of this status**.
Injection	**ET321: Air conditioning compressor**	**ACTIVE**	If the status displays **INACTIVE**, refer to the **interpretation of this status**.
	PR037: Refrigerant pressure	**1 bar < X < 27 bar**	If there is a fault, see **the interpretation of this parameter**
	PR055 or PR145: Engine speed (depending on version)	**750 rpm < X < 850 rpm**	If there is a fault, see **the interpretation of this parameter**
	PR064: Coolant temperature	**X = engine coolant temperature**	If there is a fault, see **the interpretation of this parameter**
	PR089 or PR155: Vehicle speed (depending on version)	**0 mph**	If there is a fault, see **the interpretation of this parameter**
	PR125: Power absorbed by the AC* compressor	**300 W < X < 5000 W (ambient temperature 23 ºC)**	If there is a fault, see **the interpretation of this parameter**

*AC: Air conditioning

NOTES	Only carry out this conformity check after a **complete check** with the **diagnostic tool** (fault reading and configuration checks). **Application conditions: Engine at idle speed, AIR CONDITIONING OPERATING** (air conditioning compressor engaged).

SUB-FUNCTION: COLD LOOP (CONTINUED)

Computer	Parameter or Status Checked or Action	Display and notes	Fault finding
Injection	**ET298: Low-speed fan assembly**	**ACTIVE if the refrigerant pressure is less than 19 bar, INACTIVE otherwise.**	In the event of a fault, refer to **the interpretation of this status**.
	ET299: High-speed fan assembly	**ACTIVE if the refrigerant pressure is more than 19 bar, INACTIVE otherwise.**	In the event of a fault, refer to **the interpretation of this status**.
	ET018: Air conditioning request	**ACTIVE / YES**	In the event of a fault, refer to **the interpretation of this status**.

NOTES	Only carry out this conformity check after a **complete check** with the **diagnostic tool** (fault reading and configuration checks). **Application conditions: Engine at idle speed, AIR CONDITIONING OPERATING** (air conditioning compressor engaged).

SUB-FUNCTION: HEATING

Computer	Parameter or Status Checked or Action	Display and notes	Fault finding
UCH	**PR001:** Battery voltage	**12.5 V < X < 14.4 V**	If there is a fault, refer to the **interpretation of this parameter** If the fault is still present, carry out a check of the charging circuit.
	ET004: +12 V after ignition	**PRESENT**	In the event of a fault, refer to **the interpretation of this status**.
Injection	**PR064:** Coolant temperature	**X = engine coolant temperature**	If there is a fault, see **the interpretation of this parameter**
	ET111: RCH number set	**YES or NO** **Note: Depending on the requirements of the injection system (power requirement, torque reduction, etc.), the injection computer sets the controlled passenger compartment heating resistor stage number (no more, no less)**	In the event of a fault, refer to **the interpretation of this status**.

NOTES	Only carry out this conformity check after a **complete check** with the **diagnostic tool** (fault reading and configuration checks). **Application conditions: Engine at idle speed, AIR CONDITIONING OPERATING** (air conditioning compressor engaged).

SUB-FUNCTION: HEATING (CONTINUED)

Computer	Parameter or Status Checked or Action	Display and notes	Fault finding
Injection	**ET112:** Passenger compartment heating resistor cut-off	**YES or NO** **Note: Depending on the requirements of the injection system (power requirement, torque reduction, etc.), the injection computer sets the controlled passenger compartment heating resistor stage number (no more, no less)**	In the event of a fault, refer to **the interpretation of this status**.

NOTES	Only carry out this conformity check after a **complete check** with the **diagnostic tool** (fault reading and configuration checks). **Application conditions: Engine at idle speed, AIR CONDITIONING OPERATING** (air conditioning compressor engaged).

SUB-FUNCTION: USER SELECTION

Computer	Parameter or Status Checked or Action	Display and notes	Fault finding
UCH	**ET547:** Rear de-icing button	**PRESSED / RELEASED**	In the event of a fault, refer to the **interpretation of this status**.

SUMMARY TABLE OF THE VARIOUS AIR CONDITIONING COMPUTER COMMANDS

NAME OF SUB-FUNCTION	COMPUTER NAME	TITLE OF COMMAND	FAULT FINDING
COLD LOOP	**Injection**	**AC180: Air conditioning compressor relay control or AC070 Air conditioning compressor or AC003 Air conditioning compressor (depending on version)**	In the event of a fault, consult **the interpretation of this command**.
		AC039 High speed fan assembly relay or AC625 High speed fan assembly (depending on version)	In the event of a fault, consult **the interpretation of this command**.
		AC038 Low speed fan assembly relay or AC626 Low speed fan assembly (depending on version)	In the event of a fault, consult **the interpretation of this command**.
HEATING	**Injection**	**AC250 Heating resistor relay 1**	In the event of a fault, consult **the interpretation of this command**.
		AC251 Heating resistor relay 2	In the event of a fault, consult **the interpretation of this command**.

Fault finding procedures for the commands listed in this summary are explained in the Workshop Repair Manuals relating to the computer which generates the signal (see **Introduction**).

NOTES	**Special notes:** This section corresponds to the list of possible customer complaints.

AIR DISTRIBUTION PROBLEM

AIR DISTRIBUTION PROBLEM	**ALP 2**
AIR FLOW FAULT	**ALP 3**
INEFFICIENT WINDSCREEN DEMISTING	**ALP 4**
NO PASSENGER COMPARTMENT VENTILATION	**ALP 5**

HEATING FAULT

NO HEATING OR LOSS OF HEATING (section 61A)	**ALP 6**
TOO MUCH HEATING (section 61A)	**ALP 7**

AIR CONDITIONING FAULT

NO COLD AIR	**ALP 8**
TOO MUCH COLD AIR	**ALP 9**
INEFFICIENT REAR SCREEN DE-ICING/DEMISTING	**ALP 10**

PASSENGER COMPARTMENT ODOURS

- **UNPLEASANT ODOURS IN PASSENGER COMPARTMENT** → **ALP 11**

WATER IN PASSENGER COMPARTMENT

- **WATER IS PRESENT IN PASSENGER COMPARTMENT** → **ALP 12**

CONTROL PANEL FAULT

- **NO CONTROL PANEL LIGHTING** → **ALP 13**

COMPRESSOR NOISES

- **COMPRESSOR NOISES** → **ALP 14**

ALP 2	Air distribution fault

NOTES	Make sure that **the air circuit** (**cabin filter**, scuttle panel grille, air ducts etc.) is not blocked.

Check that **the air circuit** (**cabin filter**, scuttle panel grille, air vents and extractors etc.) is not blocked.
Ensure that the passenger compartment fan blades are in good condition.
Repair, clean or change the cabin filter if necessary.

Ensure that the blower unit is properly **sealed**.
Repair if necessary.

↓

Set the passenger compartment blower to maximum speed with maximum hot or maximum cold and move the air distribution control.
Check that the air outlet is the one selected.

Is the air distribution correct?

YES → The air distribution is operating correctly.
Explain to the customer how the system operates.

NO ↓ A

AFTER REPAIR	Carry out a full check with the **diagnostic tool**.

ALP 2 CONTINUED 1	

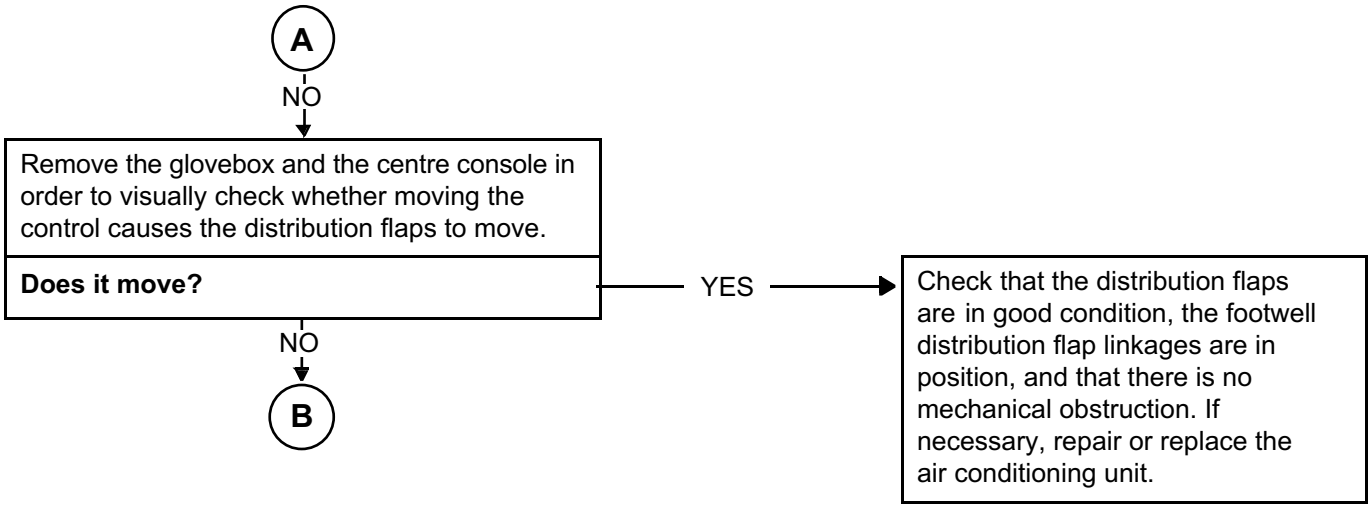

AFTER REPAIR	Carry out a full check with the **diagnostic tool**.

ALP 2 CONTINUED 2	

B

Check that the cable routing is clean and that the cables are in good condition.
Repair if necessary.

Make sure that the controls are in good condition and that they move the cables correctly.
Repair if necessary.

End of fault finding.

AFTER REPAIR	Carry out a full check with the **diagnostic tool**.

ALP 3	Air flow fault

NOTES	Only refer to this customer complaint after a **complete check using the diagnostic tool** Check that the customer knows how to work the air conditioning system properly.

Does the passenger compartment fan **operate**? Check all of the speeds: Does the flow vary in accordance with the position of the speed switch?

NO → Repair, see **ALP 5**.

YES ↓

Make sure that **the air circuit** (**cabin filter**, scuttle panel grille, air ducts etc.) is not blocked.
Ensure that the passenger compartment fan blades are in good condition.
Clean or replace the cabin filter.

↓

With the cabim filter removed, put your hand into the housing to ensure that the evaporator is not obstructed and that there is no ice.

Is the evaporator obstructed?

YES → Remove the evaporator and clean if it is blocked. If there is ice on the evaporator, carry out a **conformity check** on the temperature sensors (exterior and coolant). Replace any faulty components.

NO ↓

A

AFTER REPAIR	Carry out a full check with the **diagnostic tool**.

ALP 3 CONTINUED	

A

NO

Ensure that the blower unit is properly **sealed**. Also check that the air distribution ducts (right-hand and left-hand, upper and lower) are correctly connected to the housing as well as the refrigeration pipe in the glove box (if the customer complains about a feeling of cold air on the passenger's side).
Repair if necessary.

Check that the air recirculation flap does not remain closed when in the recirculation position.
Repair if necessary.

Does the fault disappear when the **air distribution** is changed?

YES → Ensure that all the air vents are open.
If the fault persists, refer to **ALP 2**.

NO

See **ALP 5**.

AFTER REPAIR	Carry out a full check with the **diagnostic tool**.

ALP 4	Inefficient windscreen demisting

NOTES	**Special notes:** Check that the inside of the windows are not greasy, as this reduces the demisting efficiency.

Is the passenger compartment fan **working**?

NO → Repair, see **ALP 5**.

YES ↓

Check that the air extraction vents are not blocked.
Repair if necessary.

Is the fault still present?

NO → **End of fault finding procedure.**

YES ↓

Ensure that there are no **water leaks** into the passenger compartment, which would significantly increase the humidity and reduce the effectiveness of the demisting.
Repair if necessary (see **ALP 12**).

Is the fault still present?

NO → **End of fault finding procedure.**

YES ↓

Make sure that the compressor is working correctly by switching on the air conditioning.

Does the compressor work?

NO → See **ALP 8 No cold air**.

YES ↓

A

AFTER REPAIR	Carry out a full check with the **diagnostic tool**.

ALP 4 CONTINUED	

A

Check that the condensation evacuation port (water from the evaporator) is not blocked.
Repair if necessary.

Is it an **air distribution** fault? — YES → See **ALP 2**.

NO

Is it an **air flow** fault? — YES → See **ALP 3**.

NO

Is it a **heating performance** fault? — YES → See **61A, Heating, Fault finding chart, ALP 6 No heating or insufficient heating**.

NO

Check that the recirculation flap is in the exterior air position.
Repair if necessary (see **MR 451, Mechanical, 61A, Heating, Recirculation control cable: Removal - Refitting**).

AFTER REPAIR	Carry out a full check with the **diagnostic tool**.

ALP 5	No passenger compartment ventilation

NOTES	Check that fuses **F39** and **F36** are in good condition.

Check that the **air circuit (cabin filter, scuttle panel grille, air ducts, etc.)** is not blocked.

Is the air circuit in good condition?

NO → If necessary, repair, clean or replace the cabin filter (see **MR 451 Mechanical, 61A, Heating, Cabin filter: Removal - Refitting**).

YES →

Check the condition of the passenger compartment blower blades

Are the passenger compartment blower blades in good condition?

NO → If necessary, repair, clean or replace the passenger compartment blower blades (see **MR 451 Mechanical, 61A, Heating, Fan assembly: Removal - Refitting**).

YES →

Check that the air recirculation flap does not remain closed when in the recirculation position. Repair if necessary.

Ensure that all the air vents are open. Repair if necessary.

A

AFTER REPAIR	Carry out a full check with the **diagnostic tool**.

ALP 5 CONTINUED 1	

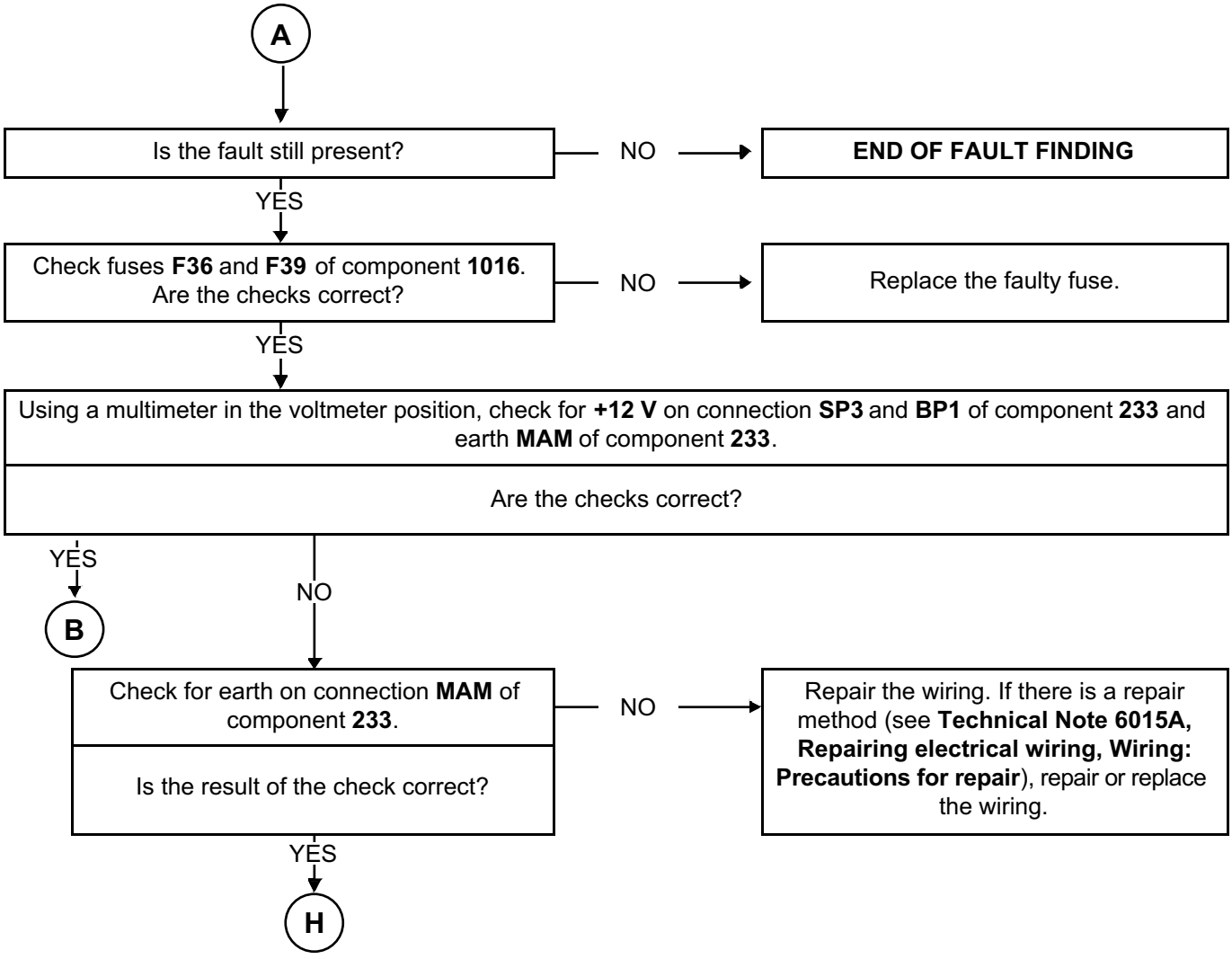

AFTER REPAIR	Carry out a full check with the **diagnostic tool**.

ALP 5 CONTINUED 2	

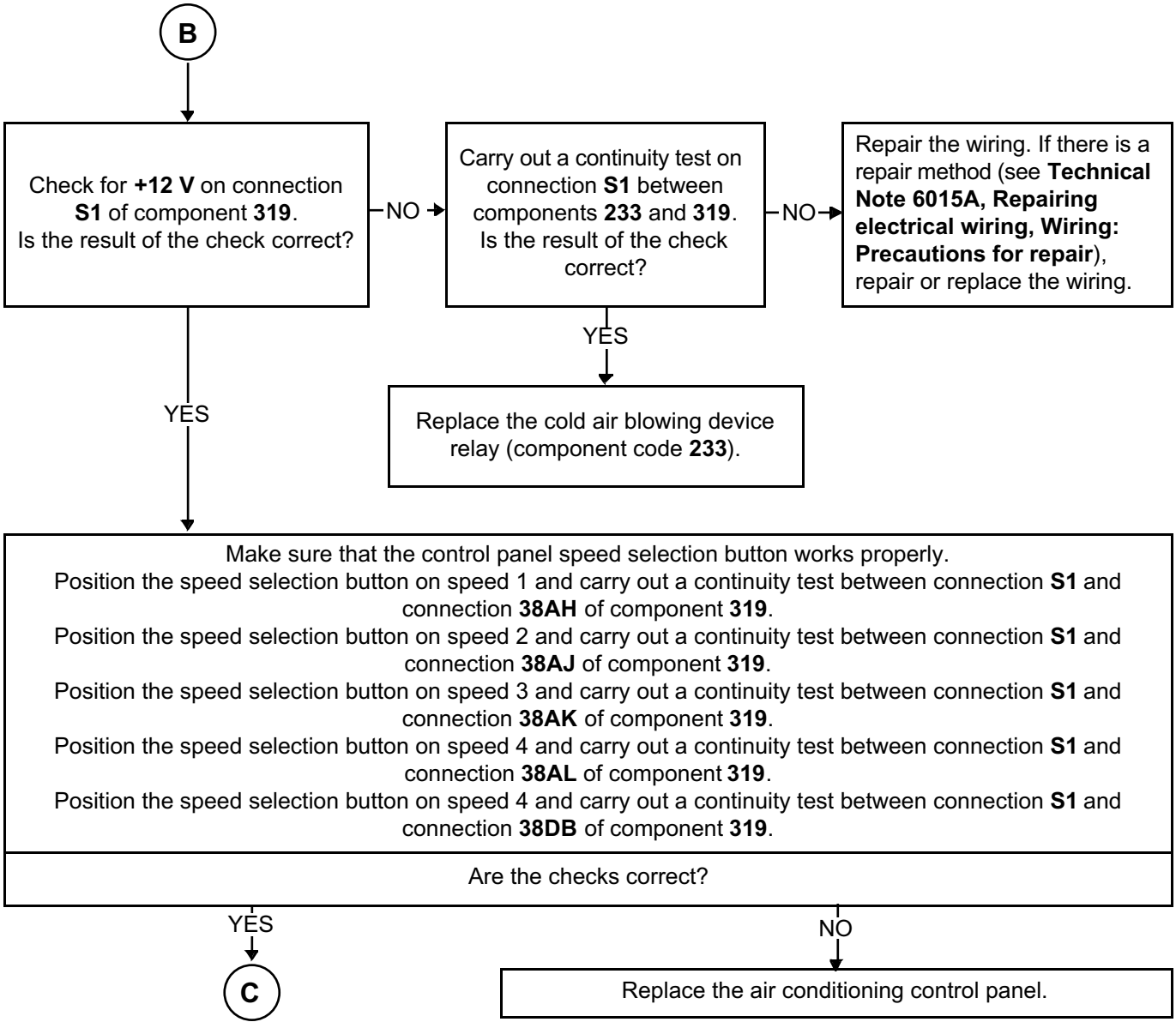

AFTER REPAIR	Carry out a full check with the **diagnostic tool**.

ALP 5 CONTINUED 3	

C

Carry out a continuity test on connection **38AH** between components **319** and **164**.

Is the continuity correct?

YES

Carry out a continuity test on connection **38AJ** between components **319** and **164**.

NO

Fault on connection **38AH** between components **319** and **164**. Repair the wiring.
If there is a repair procedure (see **Technical Note 6015A, Repairing electrical wiring, Wiring: Precautions for repair**), repair the wiring, otherwise replace it.

Is the continuity correct?

YES

Carry out a continuity test on connection **38AK** between components **319** and **164**.

NO

Fault on connection **38AJ** between components **319** and **164.** Repair the wiring. If there is a repair procedure (see **Technical Note 6015A, Repairing electrical wiring, Wiring: Precautions for repair**), repair the wiring, otherwise replace it.

Is the continuity correct?

YES

D

NO

E

AFTER REPAIR	Carry out a full check with the **diagnostic tool**.

ALP 5 CONTINUED 4	

D

Carry out a continuity test on connection **38AK** between components **319** and **164**.

E

Fault on connection **38AK** between components **319** and **164**. Repair the wiring. If there is a repair procedure (see **Technical Note 6015A, Repairing electrical wiring, Wiring: Precautions for repair**), repair the wiring, otherwise replace it.

Is the continuity correct?

NO

Fault on connection **38AL** between components **319** and **164**. Repair the wiring. If there is a repair procedure (see **Technical Note 6015A, Repairing electrical wiring, Wiring: Precautions for repair**), repair the wiring, otherwise replace it.

YES

Carry out a continuity test on connection **38DB** between components **319** and **164.**

Is the continuity correct?

YES → F

NO → G

AFTER REPAIR	Carry out a full check with the **diagnostic tool**.

ALP 5 CONTINUED 5	

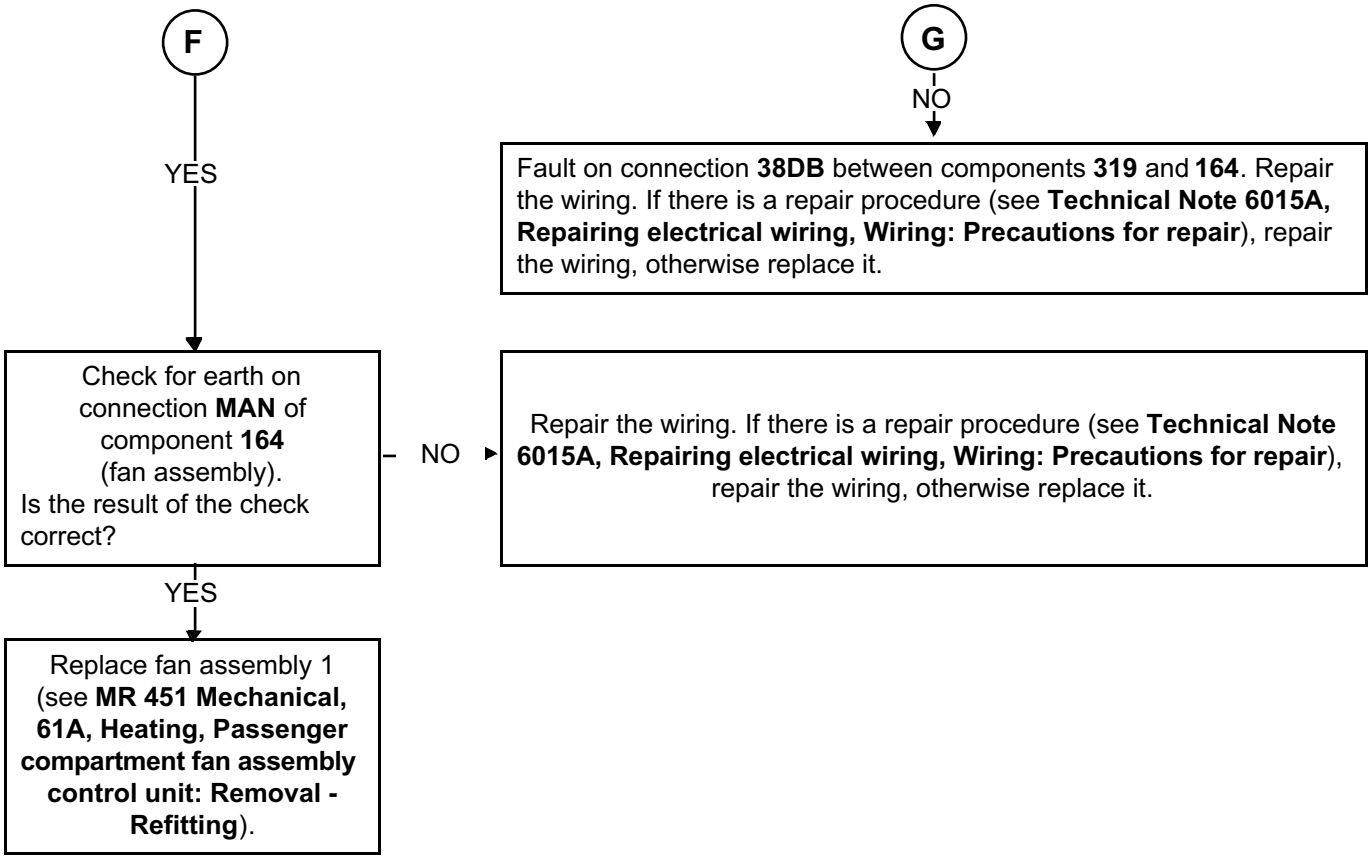

AFTER REPAIR	Carry out a full check with the **diagnostic tool**.

ALP 5 CONTINUED 6	

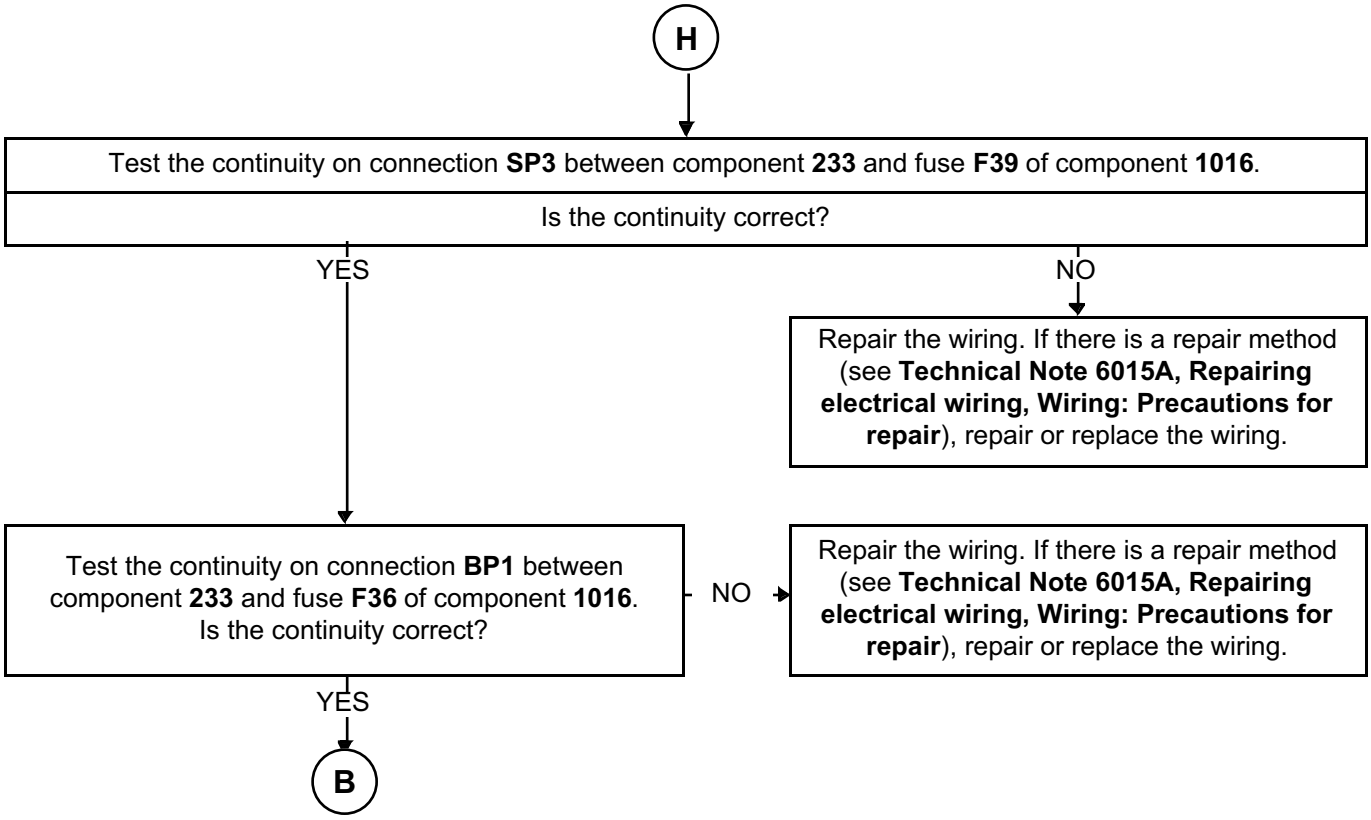

AFTER REPAIR	Carry out a full check with the **diagnostic tool**.

ALP 8	No cold air

NOTES	Consult this customer complaint after a **complete check** with the **diagnostic tool** (fault reading and configuration checks). Check that the engine speed is greater than **750 rpm** and that the exterior temperature is above **3°C**. Check that the fuses are in good condition. Use a multimeter and a **21 W** test light. Use the **Technical Note Wiring Diagram for DUSTER**.

Engine running, air conditioning in maximum cold position, maximum ventilation speed. After **10 minutes**, are the high pressure outlet pipes of the compressor hot, whereas the low pressure outlet pipes of the evaporator are cold and covered in frost?

- YES → **2**
- NO ↓

Check the cleanliness of the condenser. Touch the pipes: are they warmer at the inlet than the outlet?

- NO → Replace the condenser (see **MR 451 Mechanical, 62A, Air conditioning, Condenser: Removal - Refitting**).
- YES ↓

Is the dehydrator reservoir pipe hot at the inlet and outlet?

- NO → Replace the dehydration canister.
- YES ↓ **A**

AFTER REPAIR	Carry out a full check with the **diagnostic tool**.

ALP 8 CONTINUED 1	

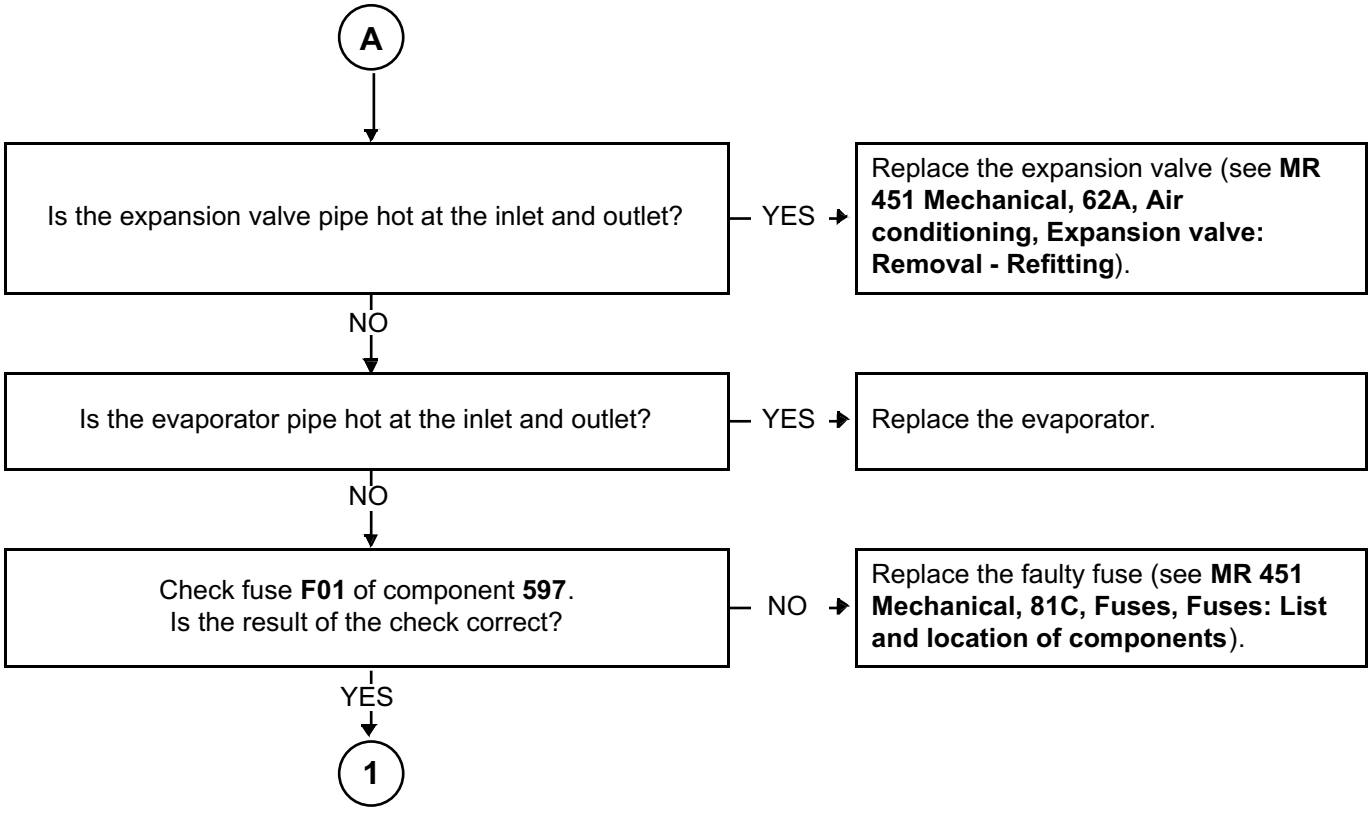

AFTER REPAIR	Carry out a full check with the **diagnostic tool**.

ALP 8 CONTINUED 2	

(1)

Using the **diagnostic tool** statuses and parameters screen (**Injection cold loop sub-function**), check that the temperature signals are consistent (no sensor drift resulting in incorrect measurement).

– Using parameter **PR064 Coolant temperature**.

Are the temperature signals consistent?

NO →

Carry out **a conformity check**:

– For the coolant temperature sensor, **see 13B, Diesel injection, Fault summary table or 17B Petrol injection, Fault summary table**.

Replace any faulty components.

YES ↓

Start the engine and switch on the air conditioning by pressing the AC button (with a request for maximum cold temperature and the passenger compartment blower running).

On the **Cold loop** sub-function screen, display the following status: **ET018 Air-conditioning request** should be **ACTIVE**.

Note: the status indicates whether the signal for the AC* button pressed on the control panel is read by the injection computer correctly.

Is status **ET018 ACTIVE**?

NO →

Continuity fault on connection **38Z**.
Use an ohmmeter to test the continuity on connection **38Z** between components **319** and **120**. If there is a repair method (see **Technical Note 6015A, Repairing electrical wiring, Wiring: Precautions for repair**), repair or replace the wiring.

YES ↓

(B)

* AC: air conditioning

AFTER REPAIR	Carry out a full check with the **diagnostic tool**.

ALP 8 CONTINUED 3	

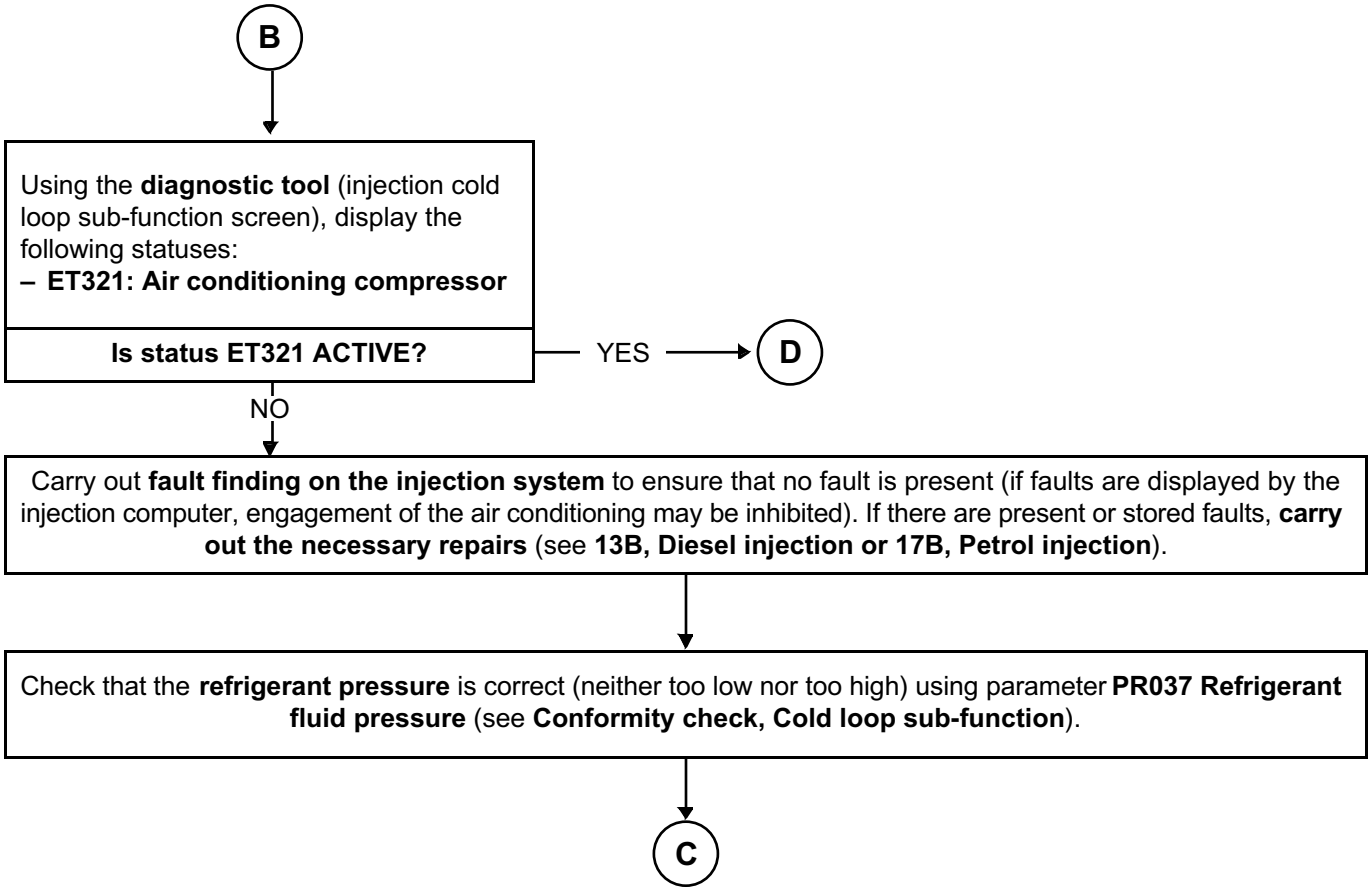

AFTER REPAIR	Carry out a full check with the **diagnostic tool**.

ALP 8 CONTINUED 4	

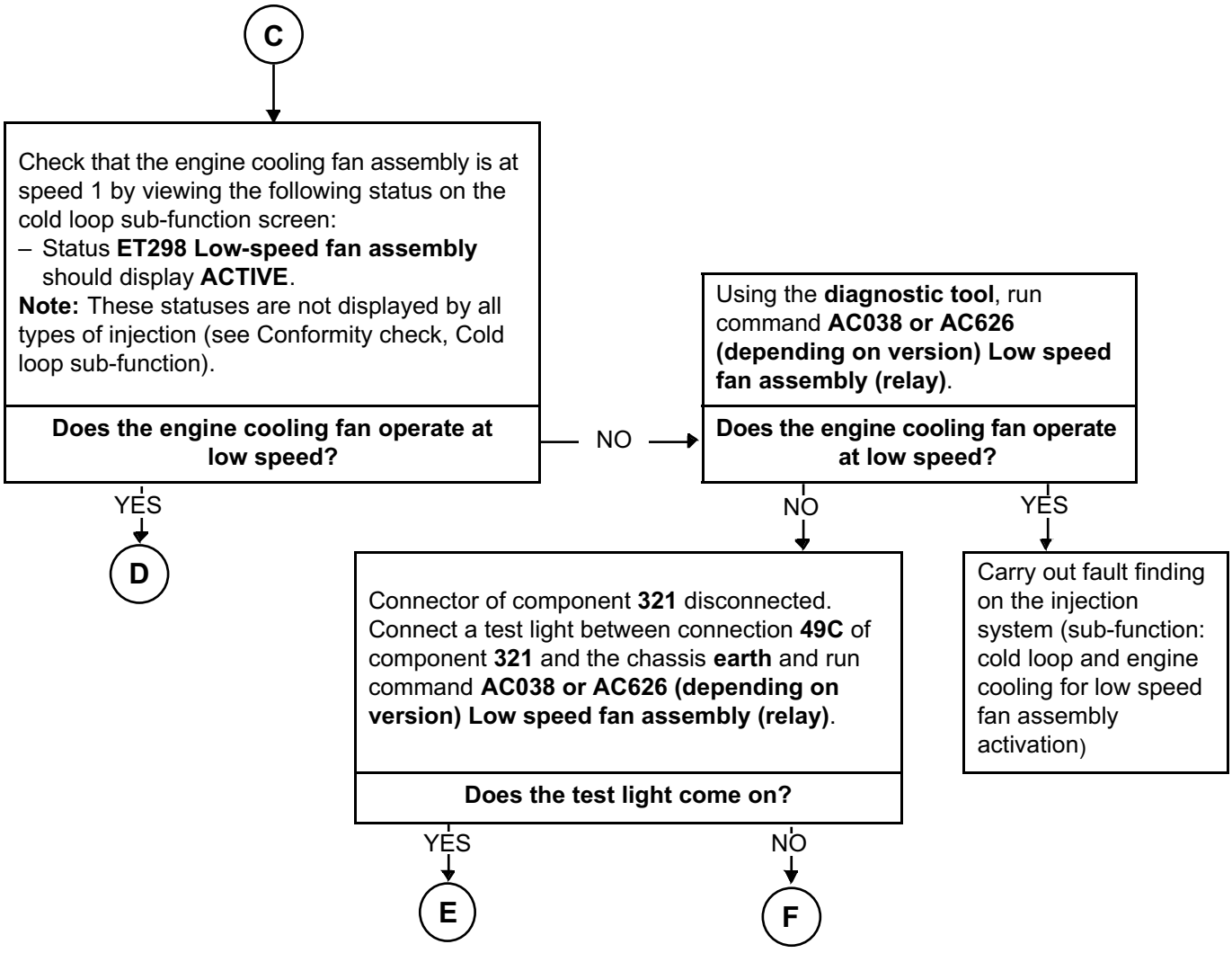

AFTER REPAIR	Carry out a full check with the **diagnostic tool**.

ALP 8 CONTINUED 5	

E

Measure the resistance of component **321** between connections **49C** and **49B** of component **321.** If the measured resistance is infinite, replace the fan assembly resistor (component **321**).

F

Check the continuity of connection **49C** between components **321** and **784**.

Is the continuity correct?

NO

Continuity fault on connection **49C**. If there is a repair procedure (see **Technical Note 6015A, Repairing electrical wiring, Wiring: Precautions for repair**), repair the wiring, otherwise replace it.

YES

Check that the low speed fan assembly relay (component **784**) operates correctly. Replace it if faulty. (see **MR 451 Mechanical, 81C, Fuses, Fuses: List and location of components**)

AFTER REPAIR	Carry out a full check with the **diagnostic tool**.

ALP 8 CONTINUED 6	

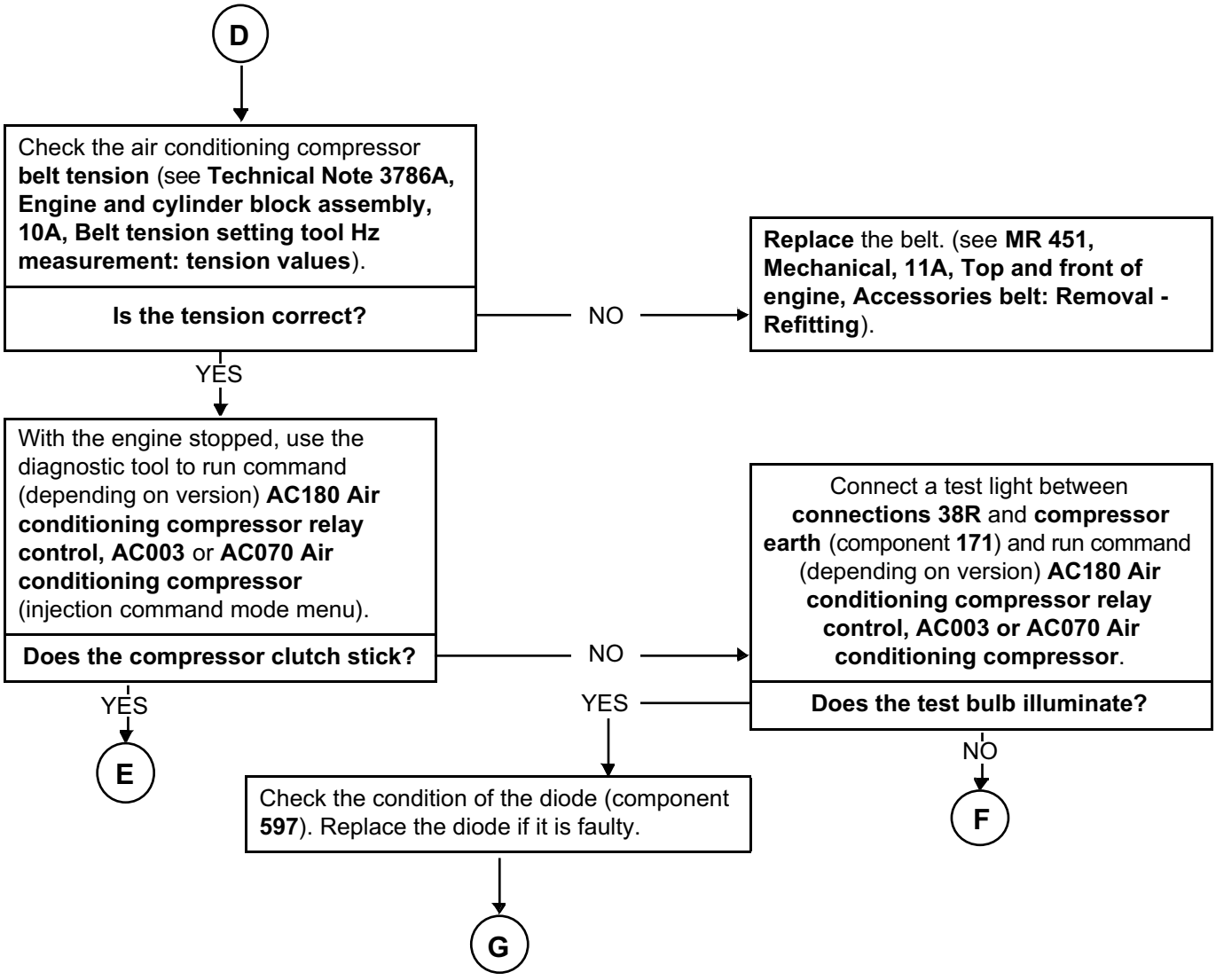

AFTER REPAIR	Carry out a full check with the **diagnostic tool**.

ALP 8 CONTINUED 7	

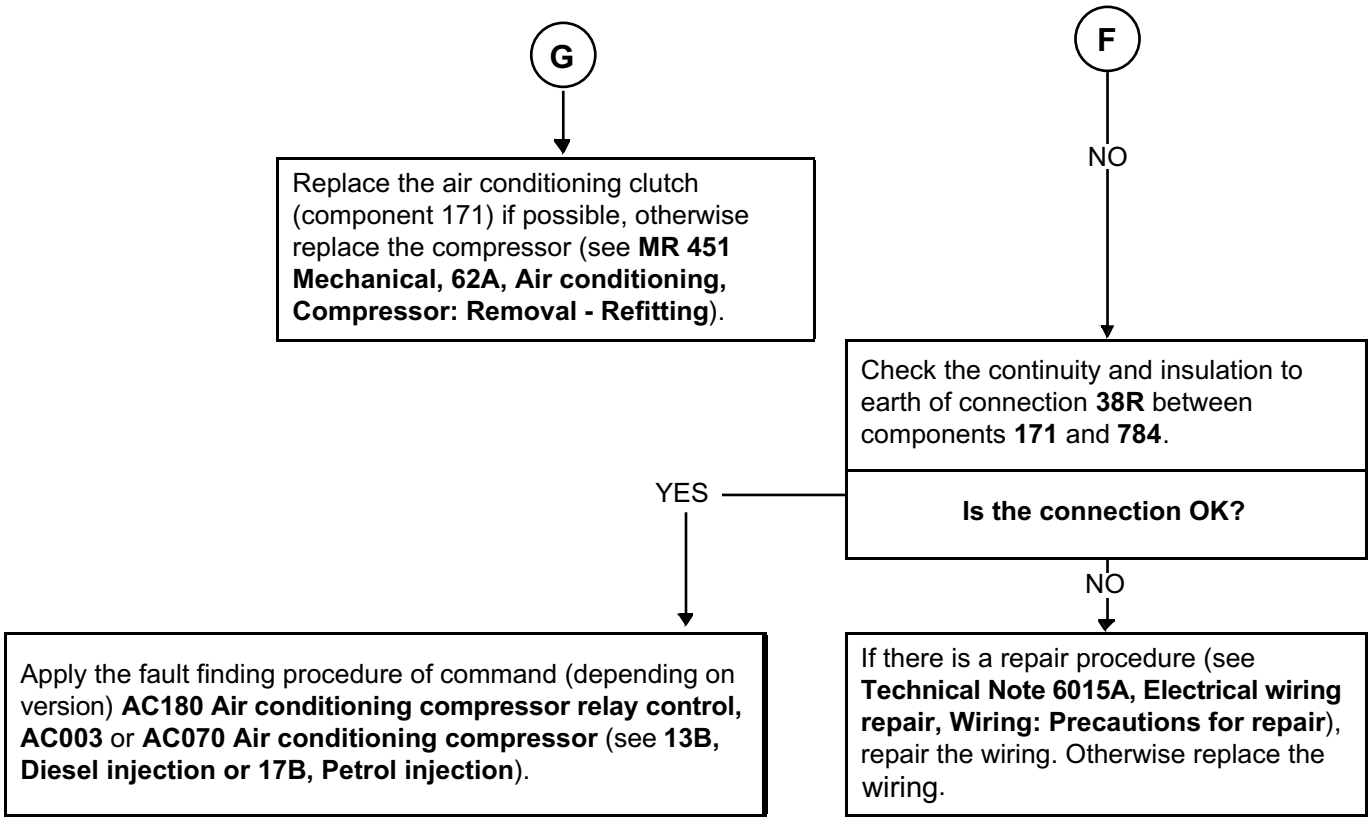

AFTER REPAIR	Carry out a full check with the **diagnostic tool**.

ALP 8 CONTINUED 8	

E → 2

With the engine warm and the passenger compartment ventilation operating, vary the position of the **mixing flap** from the maximum hot position to the maximum cold position and check subjectively that there is a difference in temperature.

Is a difference in temperature noted?

NO →

Check the condition and routing of the mixing flap control cable. Eliminate any constraints on it: kinks, cable restricted by plastic clips, etc.
Replace the lead if necessary. Unclip the cable from the side of the heating/air conditioning unit and check the stiffness of movement of each component: control button and flap control on the air distribution unit. Check that there is no mechanical fault with the mixing flap (flap jammed inside the unit, etc.). Carry out any necessary repairs.

Is the fault still present?

NO → **End of fault finding procedure.**

YES →

Check the cold loop by checking the condition of the pipes and ensuring that the air conditioning system does not have any refrigerant leaks (see **Technical Note 6001A, Air conditioning, 62A, Air conditioning, Air conditioning: Check**). Repair the faulty pipes or components.

→ H

AFTER REPAIR	Carry out a full check with the **diagnostic tool**.

ALP 8 CONTINUED 9	

H

Top up the refrigerant (see **MR 451 Mechanical, 62A, Air conditioning, Refrigerant circuit: Draining - Filling**).

Is the fault still present?

NO → **End of fault finding procedure.**

YES → **Replace the air conditioning compressor.**

AFTER REPAIR	Carry out a full check with the **diagnostic tool**.

ALP 9	Too much cold air

NOTES	Consult this customer complaint after a **complete check** with the **diagnostic tool** (fault reading and configuration checks). Check that the fuses are in good condition. Use a multimeter and a **21 W** test light. Use the **Technical Note Wiring Diagram for DUSTER**.

With the engine at idle speed and the air conditioning off (**AC** button not pressed), check that the air conditioning compressor clutch is not engaged.

Is the air conditioning compressor clutch engaged?

NO → **A**

YES ↓

With the engine stopped, check the correct operation of the compressor clutch electric control by using the diagnostic tool to run command (depending on version) **AC180 Air conditioning compressor relay control**, **AC003** or **AC070 Air conditioning compressor**.
– During the command, connection **38R** of component **171** must be supplied with **+ 12 V**.
– After the command, connection **38R** of component **171** must no longer be supplied with **+ 12 V**.

Is the connection still supplied with + 12V after the command?

YES ↓

Check the continuity and insulation from **+ 12 V** of connection **38R** between components **171** and **784**.

Is the connection OK?

NO ↓ **B**

YES ↓ **C**

NO ↓

Check that the air conditioning compressor clutch is not jammed (mechanical fault).

Is the clutch still engaged?

YES ↓ **D**

AFTER REPAIR	Carry out a full check with the **diagnostic tool**.

ALP 9 CONTINUED 1	

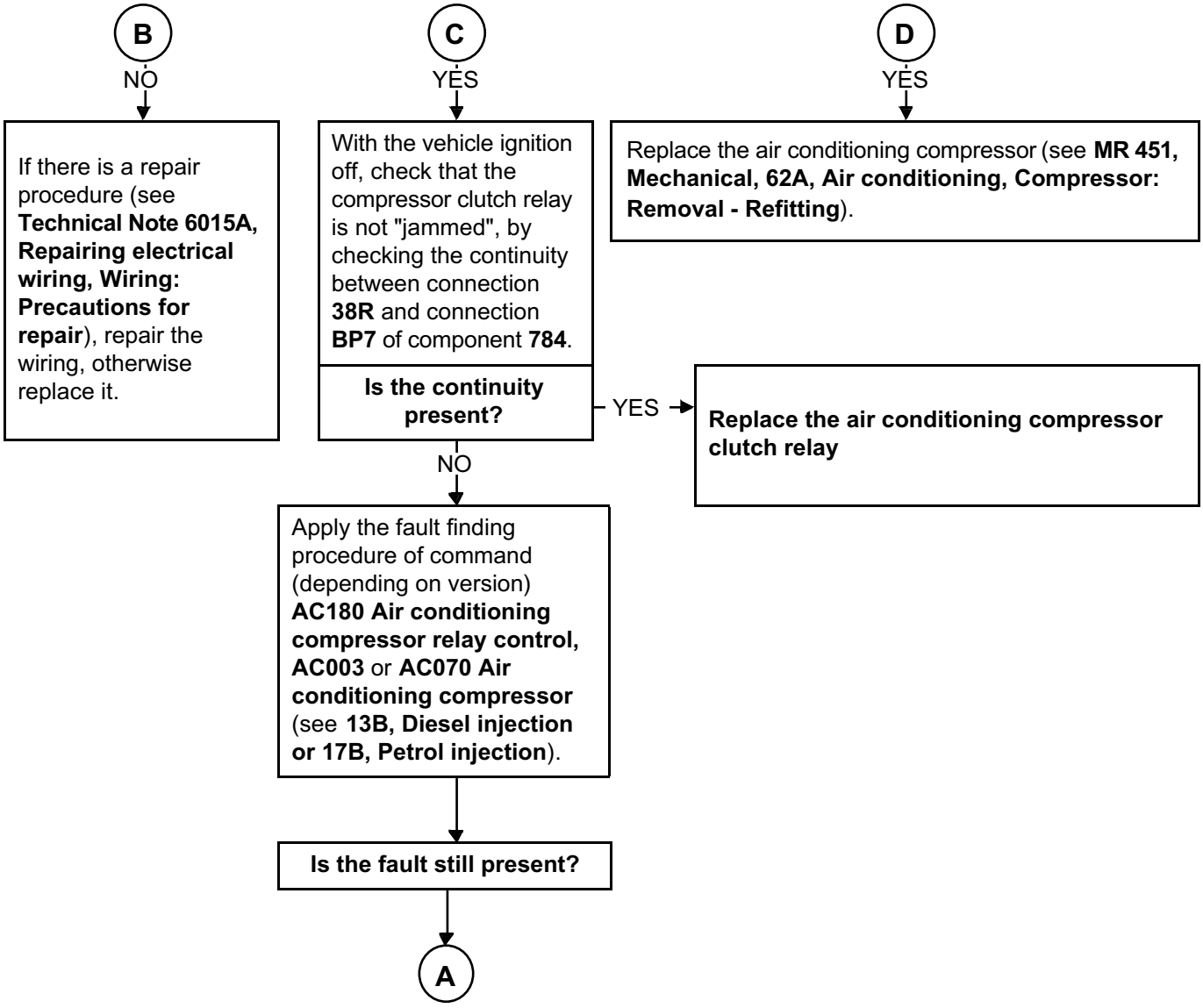

AFTER REPAIR	Carry out a full check with the **diagnostic tool**.

ALP 9 CONTINUED 2	

A

With the engine warm and the passenger compartment ventilation operating, vary the position of the **mixing flap** from the maximum cold position to the maximum hot position and check subjectively that there is a difference in temperature.

Is a difference in temperature noted?

NO → Check the condition and routing of the mixing flap control cable. Eliminate any constraints on the cable: kinks, restricted by plastic clips, etc. Replace it if necessary. Unclip the cable from the side of the unit and check the stiffness of movement of each component: control button and flap control on the air distribution unit. Check that there is no mechanical fault on the mixing flap (flap jammed inside the unit, etc.).
Carry out any necessary repairs.

YES → E

AFTER REPAIR	Carry out a full check with the **diagnostic tool**.

ALP 9 CONTINUED 3	

E

Using the **diagnostic tool** statuses and parameters screen (Injection cold loop sub-function), check that the temperature signals are consistent (no sensor drift resulting in incorrect measurement).

– Using parameter **PR064 Coolant temperature.**

Are the temperature signals consistent?

NO →

Carry out **a conformity check**:

– For the coolant temperature sensor, see **13B, Diesel injection, Fault summary table or 17B Petrol injection, Fault summary table**.

Replace any faulty components.

YES

Check the refrigerant level (see **Technical Note 6001A, Air conditioning, 62A, Air conditioning, Air conditioning: Check**).

AFTER REPAIR	Carry out a full check with the **diagnostic tool**.

ALP 10	Inefficient rear screen de-icing and demisting

NOTES	Carry out this conformity check after a **complete check** using the **diagnostic tool** (fault reading, especially UCH and injection faults and configuration checks). Check that the fuses are in good condition. Use a multimeter and a **21 W** test light. Use the **Technical Note Wiring Diagram for DUSTER**.
	Special notes: Check that the inside of the glass is not **greasy** as this lowers the de-icing efficiency.
	Note: The de-icing control is only authorised when the engine is running to save power. The heated rear screen is controlled by pressing the heated rear screen button (with time delay and door mirror de-icer if fitted).

AFTER REPAIR	Carry out a full check with the **diagnostic tool**.

ALP 10 CONTINUED 1	

Ensure that there are no water leaks in the passenger compartment which would significantly increase the moisture and reduce the effectiveness of the demisting function (see **ALP 12** if the fault is noted).

Is the fault still present?

NO → **End of fault finding procedure.**

YES ↓

Check fuses **F01** and **F32** of component **1016**.
Are the checks correct?

NO → Replace the faulty fuse.

YES ↓

Check that the UCH receives the signal about the status and operation of the engine. On the **Cold loop sub-function screen**, status **ET091 Engine running** should display **YES**.

Is status ET091 YES?

NO → Carry out fault finding on the UCH (interpretation of status **ET091**) and on the wire network.

YES ↓

A

AFTER REPAIR	Carry out a full check with the **diagnostic tool**.

ALP 10 CONTINUED 2	

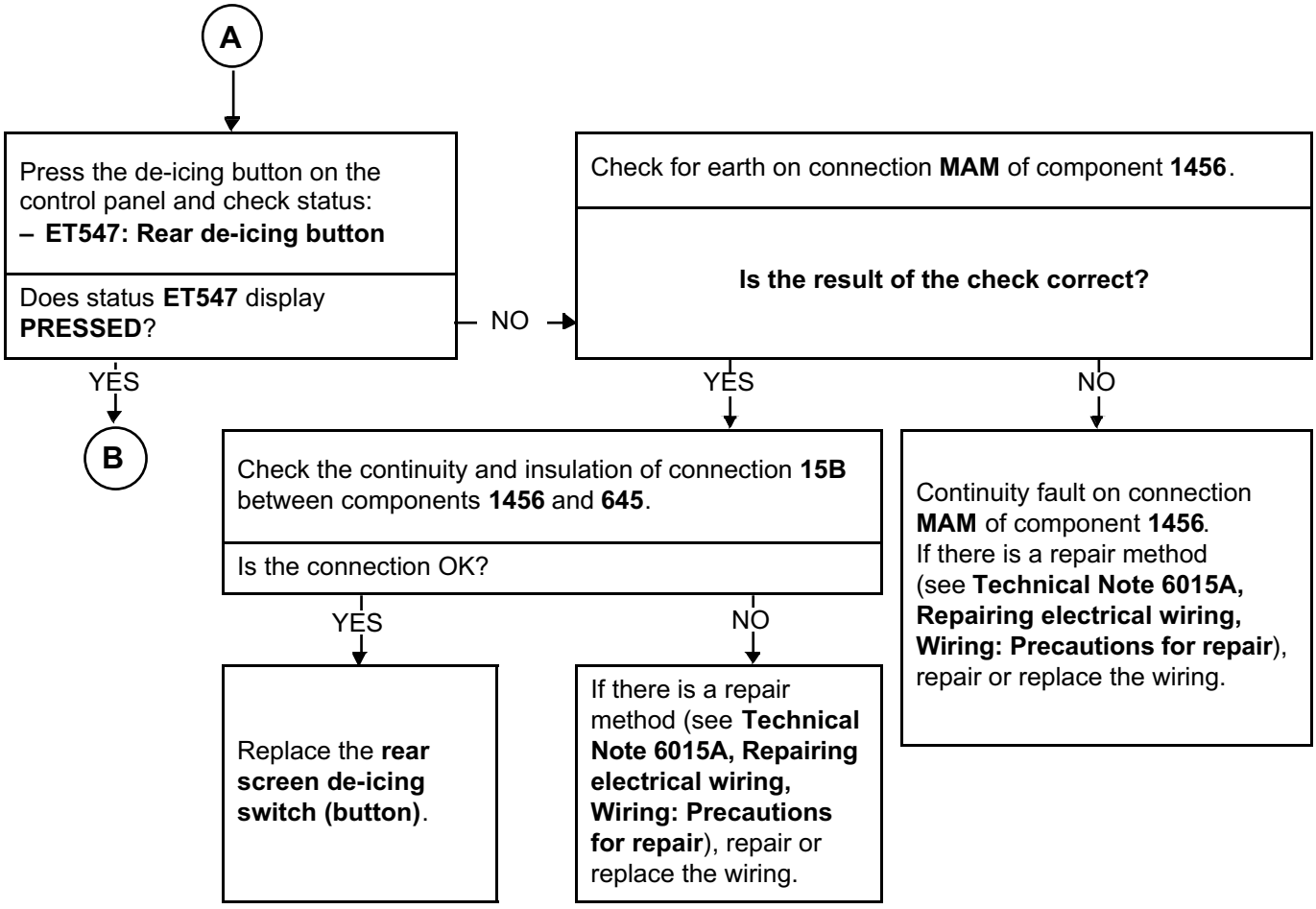

AFTER REPAIR	Carry out a full check with the **diagnostic tool**.

ALP 10 CONTINUED 3	

B

Press the de-icing button on the control panel and check for earth on connection **15M** of component **235**.

Is the result of the check correct?

NO → Continuity fault on connection **15M**. Use an ohmmeter to perform a continuity test on connection **15M** between components **235** and **645**. If there is a repair method (see **Technical Note 6015A, Repairing electrical wiring, Wiring: Precautions for repair**), repair or replace the wiring.

YES ↓

Connect a test light between connection **AP7** of component **235** and a **chassis earth**.

Does the test bulb illuminate?

NO → Continuity fault on connection **AP7**. Use an ohmmeter to test the continuity on connection **AP7** between component **235** and fuse **F01** of component **1016**. If there is a repair method (see **Technical Note 6015A, Repairing electrical wiring, Wiring: Precautions for repair**), repair or replace the wiring.

YES ↓

Connect a test light between connection **BP15** of component **235** and a **chassis earth**.

Does the test bulb illuminate?

NO → Continuity fault on connection **BP15**. Use an ohmmeter to test the continuity on connection **BP15** between component **235** and fuse **F32** of component **1016**. If there is a repair procedure (see **Technical Note 6015A, Electrical wiring repair, Wiring: Precautions for repair**), repair the wiring, otherwise replace the wiring.

YES ↓

C

AFTER REPAIR	Carry out a full check with the **diagnostic tool**.

ALP 10 CONTINUED 4	

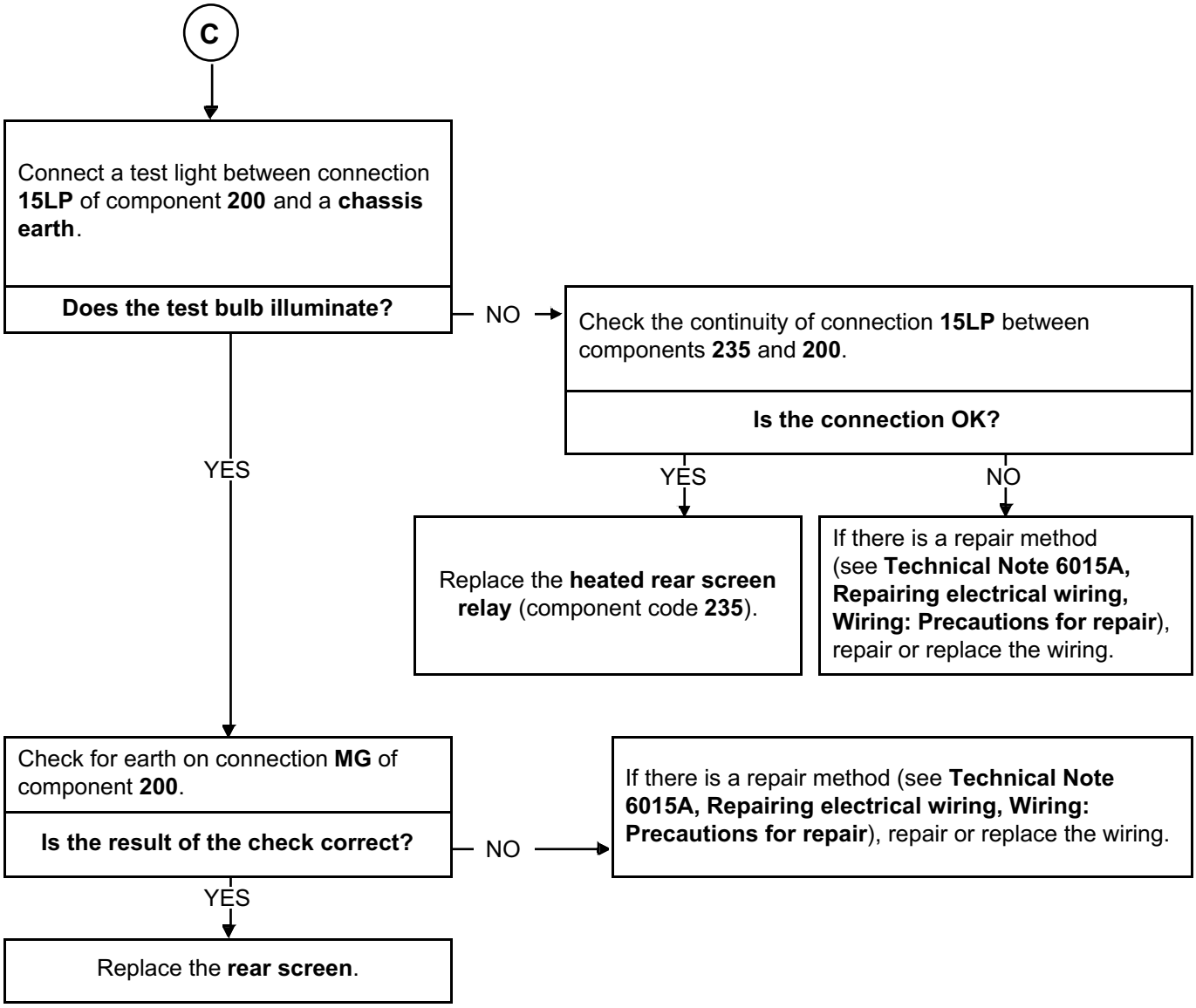

AFTER REPAIR	Carry out a full check with the **diagnostic tool**.

ALP 11	Unpleasant odours in the passenger compartment

NOTES	None.

Check that the cabin filter is not blocked or damaged.

Is the fault still present?

NO → **End of fault finding procedure.**

YES ↓

Check that the condensate drain pipe (water from the evaporator) is not blocked.

Is the fault still present?

NO → **End of fault finding procedure.**

YES ↓

A

AFTER REPAIR	Carry out a full check with the **diagnostic tool**.

ALP 11 CONTINUED	

A

YES

Check that the heating unit is completely sealed and there are no leaks into the engine compartment:
- Foam seal on the heater matrix coolant pipes fitted and in good condition.
- Rubber seal on the radiator tank fitted and in good condition (seal under the bonnet separating the engine compartment from the windscreen aperture).
- Drain valve on the radiator tank fitted and in good condition.

Repair if necessary.

Is the fault still present?

NO → **End of fault finding procedure.**

YES

Remove the cabin filter to apply air conditioning system cleaner using an extension pipe on the evaporator. Spray the entire contents of the aerosol. Leave the product to work for **15 minutes**.

AFTER REPAIR	Carry out a full check with the **diagnostic tool**.

ALP 12	Water is present in the passenger compartment

NOTES	None.

Pressurise the cooling circuit.

Is there any coolant leaking into the vehicle?

YES → **Repair.**

NO ↓

Check that the condensation evacuation pipe (water from the evaporator) is not blocked. Repair if necessary.

Is the fault still present?

NO → **End of fault finding procedure.**

YES ↓

Make sure that the **scuttle panel** (under the windscreen aperture) is not filled with water. If it is, check that the drain valve is fitted to the scuttle panel and is in good condition.
Replace the valve if necessary.

↓

Has the customer just washed the vehicle?

NO → **End of fault finding procedure.**

YES ↓

Explain to the customer that when washing the car using a hose pipe, the water jet must not be left for too long on the air inlet in the scuttle panel (on the bonnet).

AFTER REPAIR	Carry out a full check with the **diagnostic tool**.

ALP 13	No lighting on the control panel in night mode

NOTES	Check fuse **F19** or **F18** (depending on model: **F19** for **left-hand drive** and **F18** for **right-hand drive**) of component **1016**.

Check fuse **F19** (**left-hand drive**) or **F18** (**right-hand drive**) of component **1016**.
Is the test correct?

NO → Replace the faulty fuse.

YES ↓

Using a test light, check for **+12 V** between connection **LPD** or **LPG** (depending on model) and connection **NC** of component **319**.

Does the test bulb illuminate?

YES ↓

Check the condition of the air conditioning control panel bulbs.

↓ B

NO ↓

Perform a continuity test on connection **LPD** (or **LPG**) between component **319** and **F19** (**left-hand drive**) or **F18** (**right-hand drive**) of component **1016**.

↓ C

A

AFTER REPAIR	Carry out a full check with the **diagnostic tool**.

ALP 13 CONTINUED	

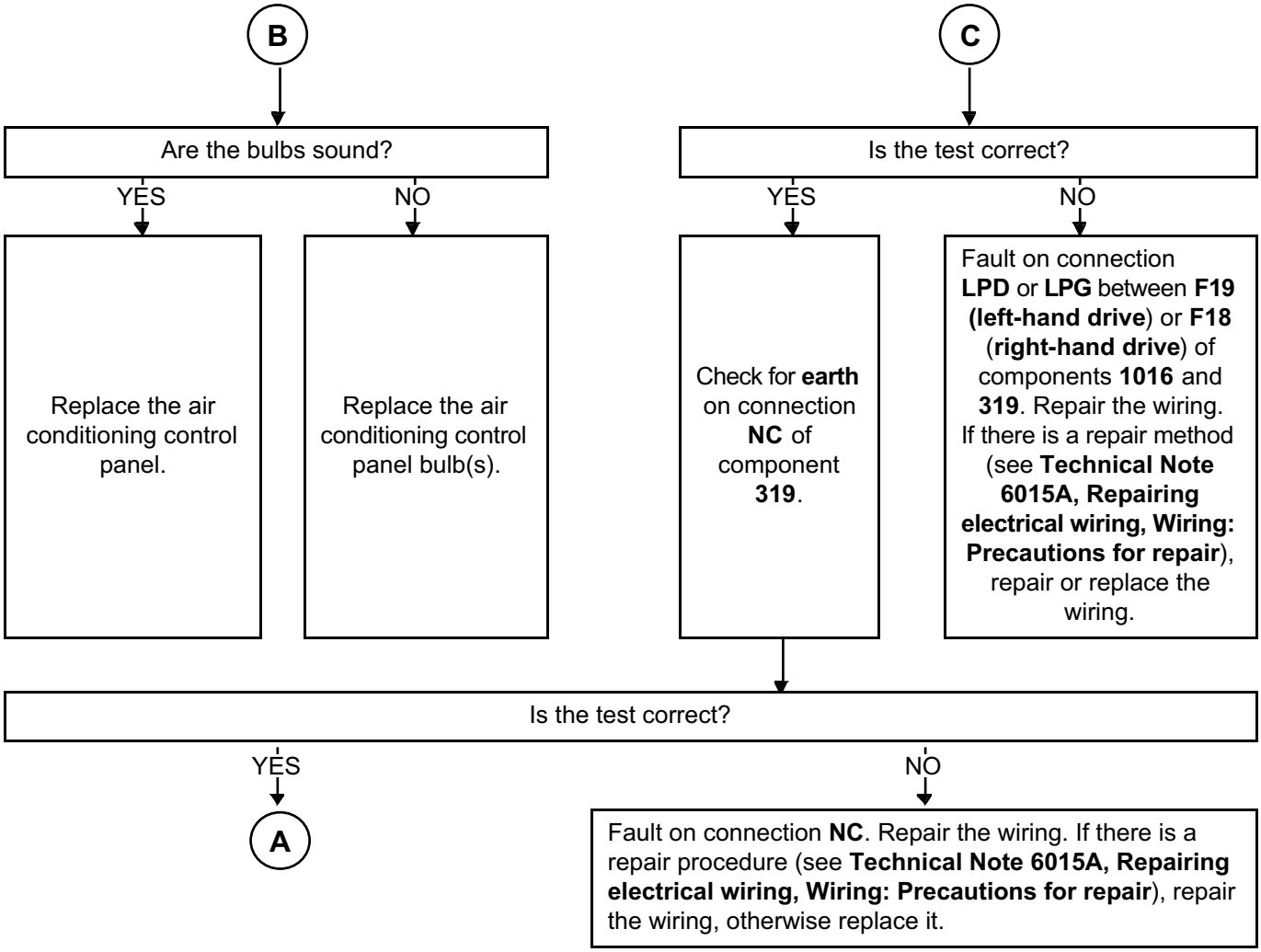

AFTER REPAIR	Carry out a full check with the **diagnostic tool**.

ALP 14	Compressor noise

NOTES	
	Only address this customer complaint after a **complete check** with the **diagnostic tool**.
	Note: Before starting any work, check that the noise is indeed coming from the compressor.

Check that the **compressor belt is in good condition** and **check its tension** (for engines without automatic tensioning) (see **MR 451, Mechanical, 11A**, **Top and front of engine, Accessories belt: Removal - Refitting**).

↓

Check that the compressor is **correctly attached** (see **MR 451, Mechanical, 62A, Air conditioning, Compressor: Removal - Refitting**).

↓

Check the refrigerant fluid and look for any leaks. Significant loss of fluid causes the compressor to make noises. (see **Technical Note 6001A, Air conditioning, 62A, Air conditioning, Air conditioning: Check**).

↓

If the fault is still present, **replace** the air conditioning compressor (see **MR 451, Mechanical, 62A, Air conditioning, Compressor: Removal - Refitting**).

AFTER REPAIR	Carry out a full check with the **diagnostic tool**.

RENAULT

6 Sealing and soundproofing

65A OPENING ELEMENT SEALING

66A WINDOW SEALING

X79

NOVEMBER 2009 **EDITION ANGLAISE**

"The repair procedures given by the manufacturer in this document are based on the technical specifications current when it was prepared.

The procedures may be modified as a result of changes introduced by the manufacturer in the production of the various component units and accessories from which the vehicles are constructed".

All rights reserved by Renault.

Copying or translating, in part or in full, of this document or use of the service part reference numbering system is forbidden without the prior written authority of Renault.

© Renault s.a.s 2007

DUSTER - Chapitre 6

Contents

Pages

65A **OPENING ELEMENT SEALING**

Side door frame seal: Removal - Refitting 65A-1

66A **WINDOW SEALING**

Front side door window run channel: Removal - Refitting 66A-1

Front side door exterior weatherstrip: Removal - Refitting 66A-2

Rear side door exterior weatherstrip: Removal - Refitting 66A-3

Rear side door window run channel: Removal - Refitting 66A-4

REMOVAL

I - REMOVAL PREPARATION OPERATION

H79

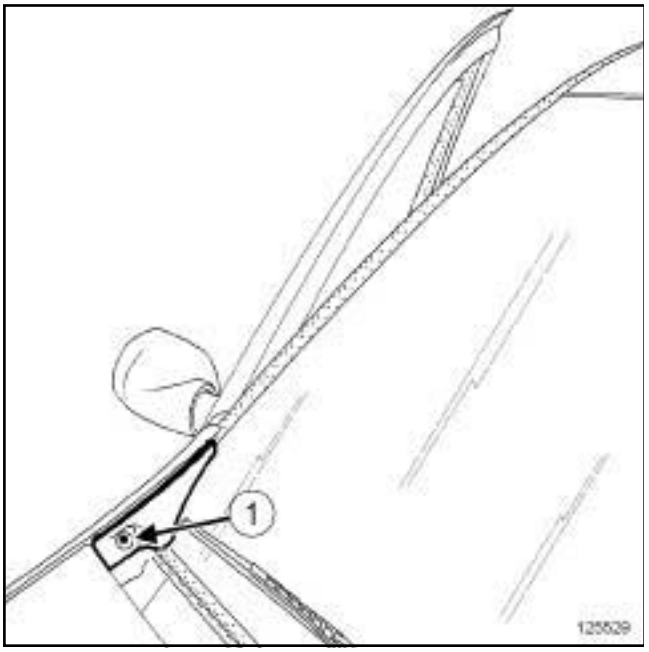

125529

❑ Remove the trim piece bolt (**1**) .

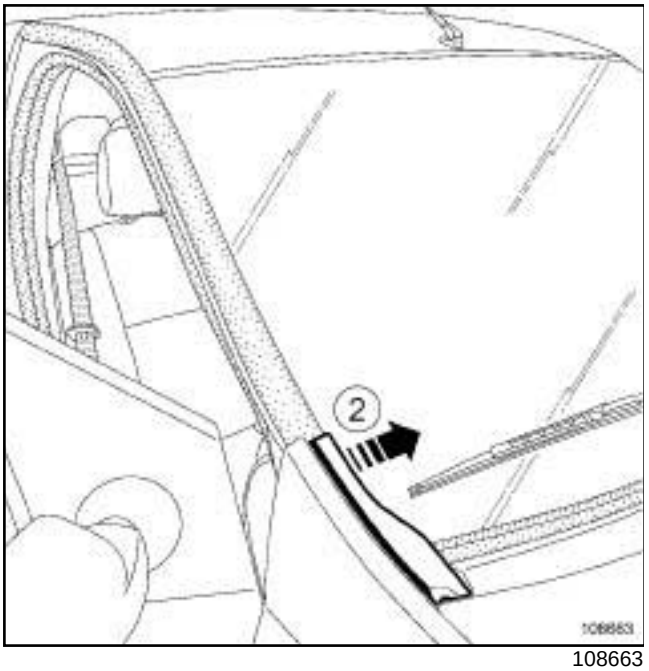

108663

❑ Unclip the trim at (**2**) .

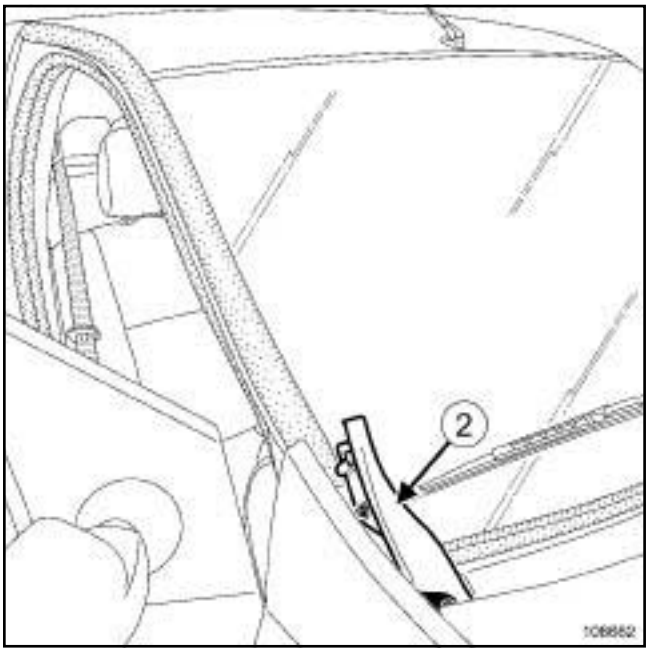

108662

❑ Remove the trim (**2**) .

II - REMOVAL OPERATION

H79

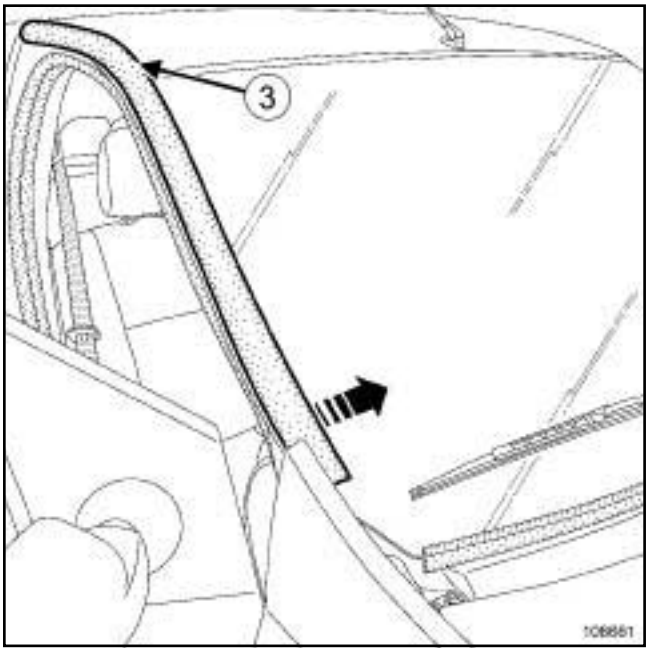

108661

❑ Remove the frame seal (**3**) .

H79

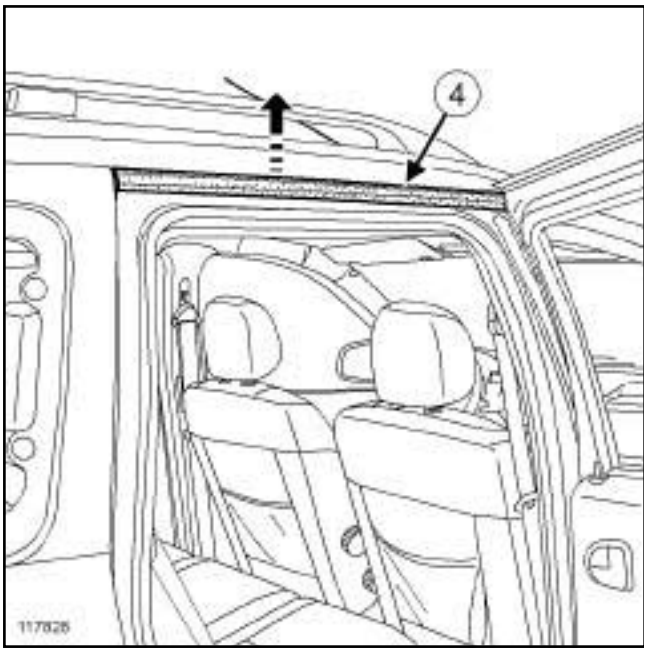

117828

❑ Remove the frame seal (**4**) .

REFITTING

❑ Proceed in the reverse order to removal.

REMOVAL

I - REMOVAL PREPARATION OPERATION

❑ Remove:

- the front side door trim (see **Front side door trim: Removal - Refitting**) (72A, Side opening element trim),
- the front side door sliding window (see **Front side door sliding window: Removal - Refitting**) (54A, Windows).

II - REMOVAL OPERATION

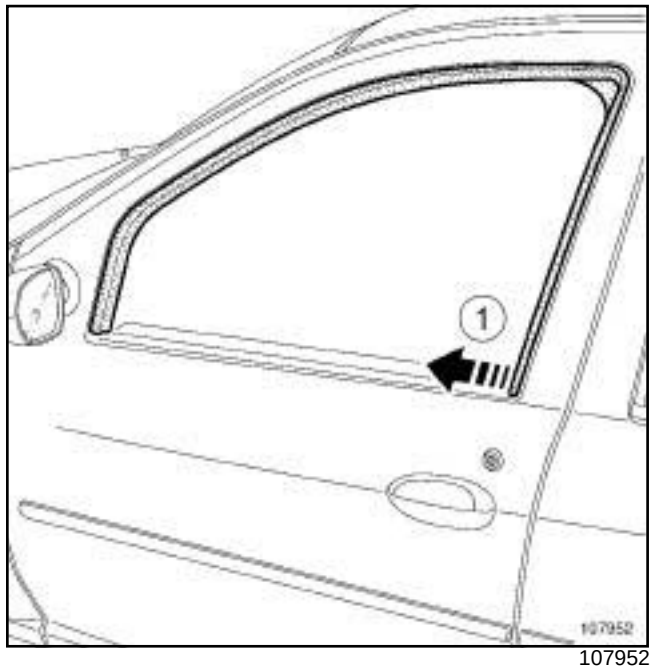

107952

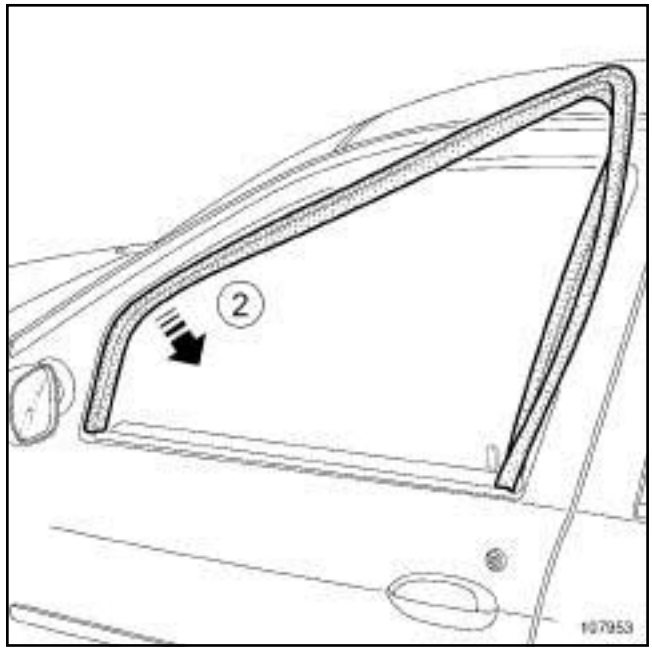

107953

❑ Detach the front side door window run channel at (**1**) , (**2**) .

❑ Remove the front side door window run channel.

REFITTING

❑ Proceed in the reverse order to removal.

Special tooling required	
Car. 1363	Set of trim removal levers.

REMOVAL

I - REMOVAL PREPARATION OPERATION

❏ Lower the window.

II - REMOVAL OPERATION

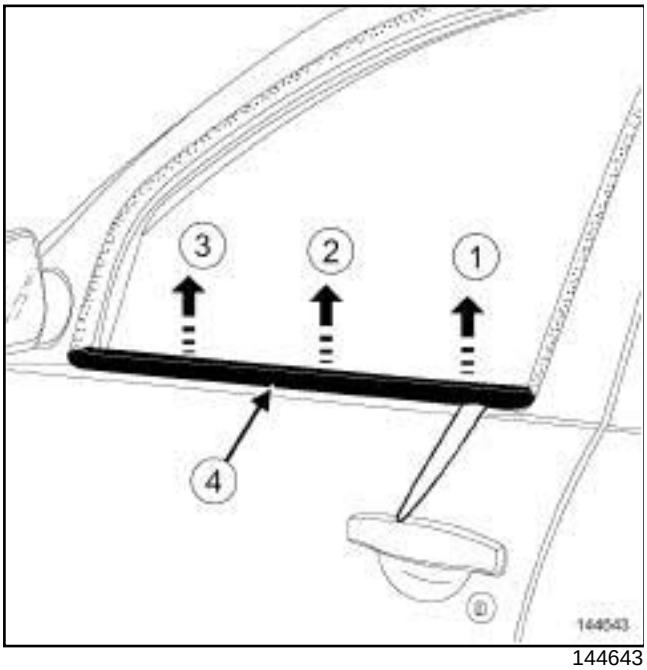

144643

❏ Carefully remove the exterior weatherstrip (**4**) using the tool **(Car. 1363)** (take care not to damage the part).

REFITTING

❏ Proceed in the reverse order to removal.

Special tooling required	
Car. 1363	Set of trim removal levers.

REMOVAL

I - REMOVAL PREPARATION OPERATION

❏ Lower the window.

II - REMOVAL OPERATION

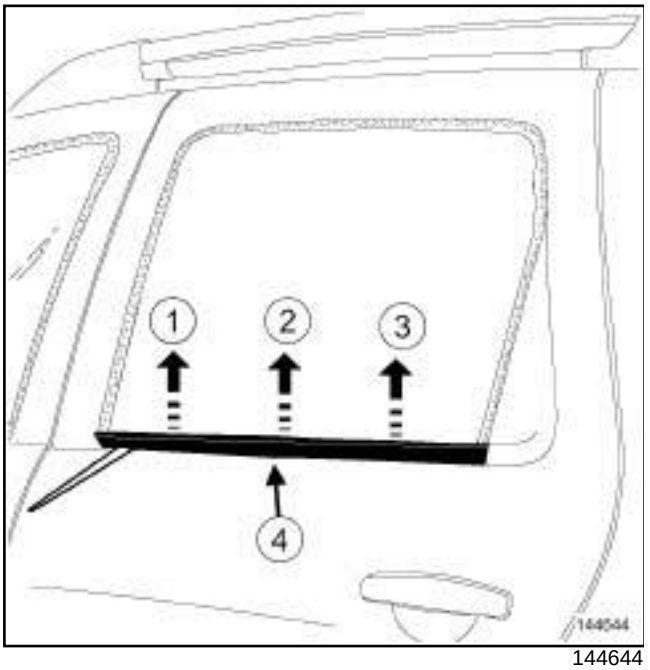

144644

❏ Carefully remove the exterior weatherstrip (**4**) using the tool **(Car. 1363)** (take care not to damage the part).

REFITTING

❏ Proceed in the reverse order to removal.

REMOVAL

REMOVAL PREPARATION OPERATION

❑ Remove:

- the rear side door trim (see **Rear side door trim: Removal - Refitting**) (72A, Side opening element trim),
- the rear side door sliding window (see **Rear side door sliding window: Removal - Refitting**) (54A, Windows).

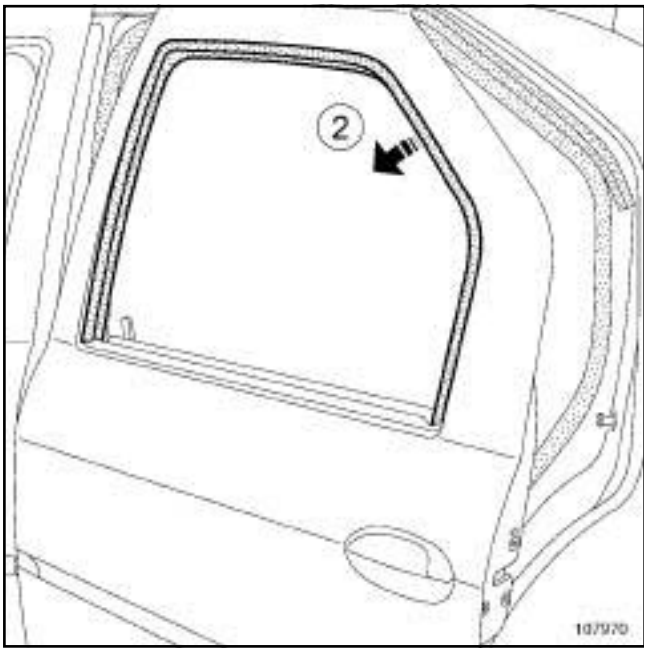

107970

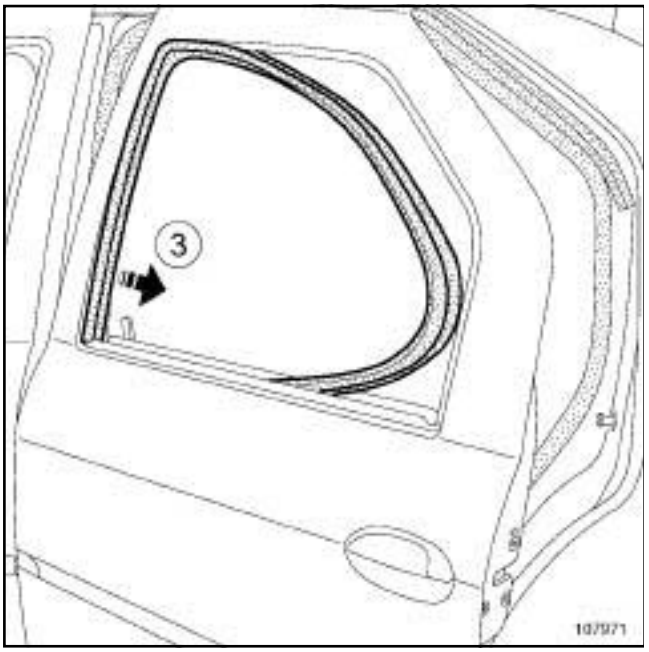

107971

❑ Remove the rear side door window run channel at (**2**) and (**3**) .

REFITTING

I - REFITTING OPERATION FOR PART CONCERNED

❑ Refit the rear side door window glass run channel.

❑ Refit:

- the rear side door sliding window (see **Rear side door sliding window: Removal - Refitting**) (54A, Windows),
- the rear side door trim (see **Rear side door trim: Removal - Refitting**) (72A, Side opening element trim).

RENAULT

7 Trim and upholstery

71A BODY INTERNAL TRIM

72A SIDE OPENING ELEMENT TRIM

73A NON-SIDE OPENING ELEMENTS TRIM

75A FRONT SEAT FRAMES AND MECHANISMS

X79

NOVEMBER 2009 EDITION ANGLAISE

"The repair procedures given by the manufacturer in this document are based on the technical specifications current when it was prepared.

The procedures may be modified as a result of changes introduced by the manufacturer in the production of the various component units and accessories from which the vehicles are constructed".

All rights reserved by Renault.

Copying or translating, in part or in full, of this document or use of the service part reference numbering system is forbidden without the prior written authority of Renault.

© Renault s.a.s 2007

DUSTER - Chapitre 7

Contents

Pages

71A BODY INTERNAL TRIM

Interior body side trim assembly: Exploded view 71A-1

Roof trim assembly: Exploded view 71A-3

Floor trim assembly: Exploded view 71A-4

Floor carpet: Removal - Refitting 71A-5

Windscreen pillar trim: Removal - Refitting 71A-8

B-pillar trim: Removal - Refitting 71A-9

72A SIDE OPENING ELEMENT TRIM

Front side door trim: Removal - Refitting 72A-1

Rear side door trim: Removal - Refitting 72A-3

73A NON-SIDE OPENING ELEMENTS TRIM

Rear opening element assembly on the passenger compartment side: Exploded view 73A-1

75A FRONT SEAT FRAMES AND MECHANISMS

Front seat assembly: Exploded view 75A-1

Interior body side trim assembly: Exploded view

H79

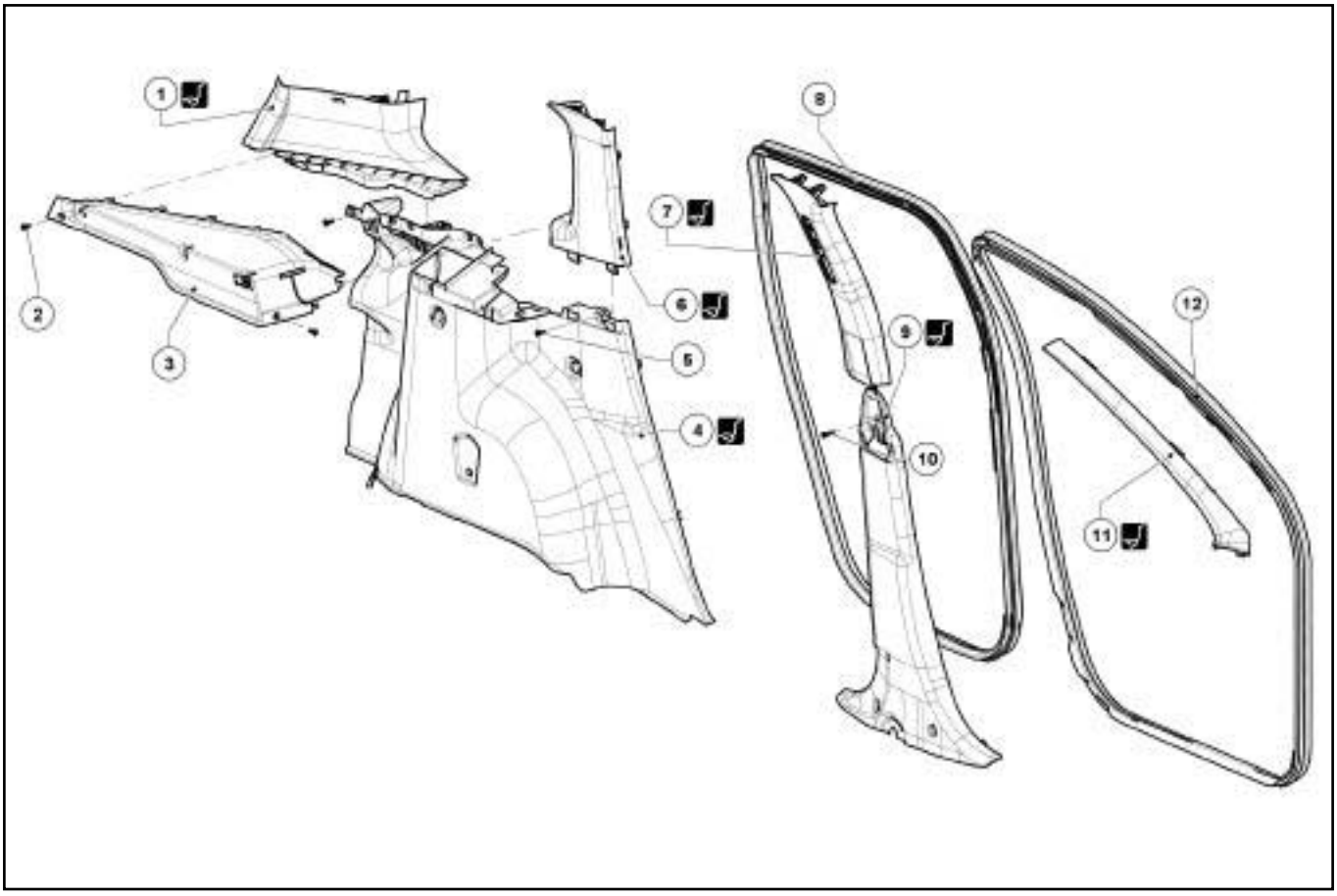

145783

(see) (01D, Mechanical introduction)

Mark	Description	Information
1	C-pillar upper trim	(Car. 1363)
2	Rear parcel shelf side trim bolt	
3	Rear parcel shelf side trim	
4	Rear wheel arch trim	(Car. 1363)
5	Rear wheel arch trim bolt	
6	C-pillar trim	(Car. 1363)
7	B-pillar upper trim	(Car. 1363)
8	Rear side door seal	
9	B-pillar lower trim	(Car. 1363)

Interior body side trim assembly: Exploded view

H79

Mark	Description	Information
10	B-pillar lower trim bolt	
11	Windscreen pillar trim	(Car. 1363)
12	Front side door seal	

Roof trim assembly: Exploded view

H79

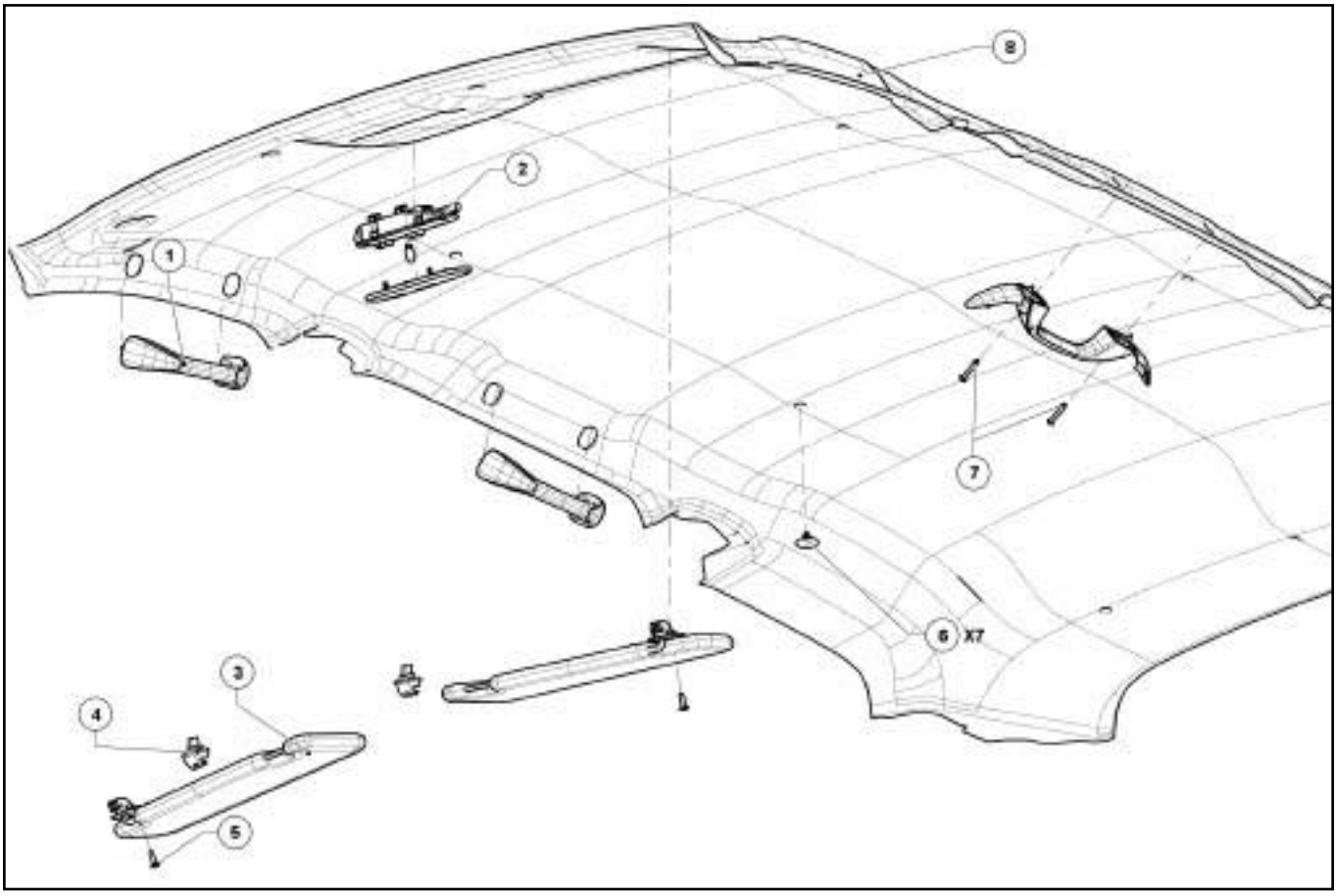

145784

(see) (01D, Mechanical introduction)

Mark	Description	Information
1	Grab handle	
2	Courtesy light	
3	Sun visor	
4	Sun visor hook	
5	Sun visor bolt	
6	Headlining clip	
7	Grab handle bolt	
8	Headlining	

Floor trim assembly: Exploded view

H79

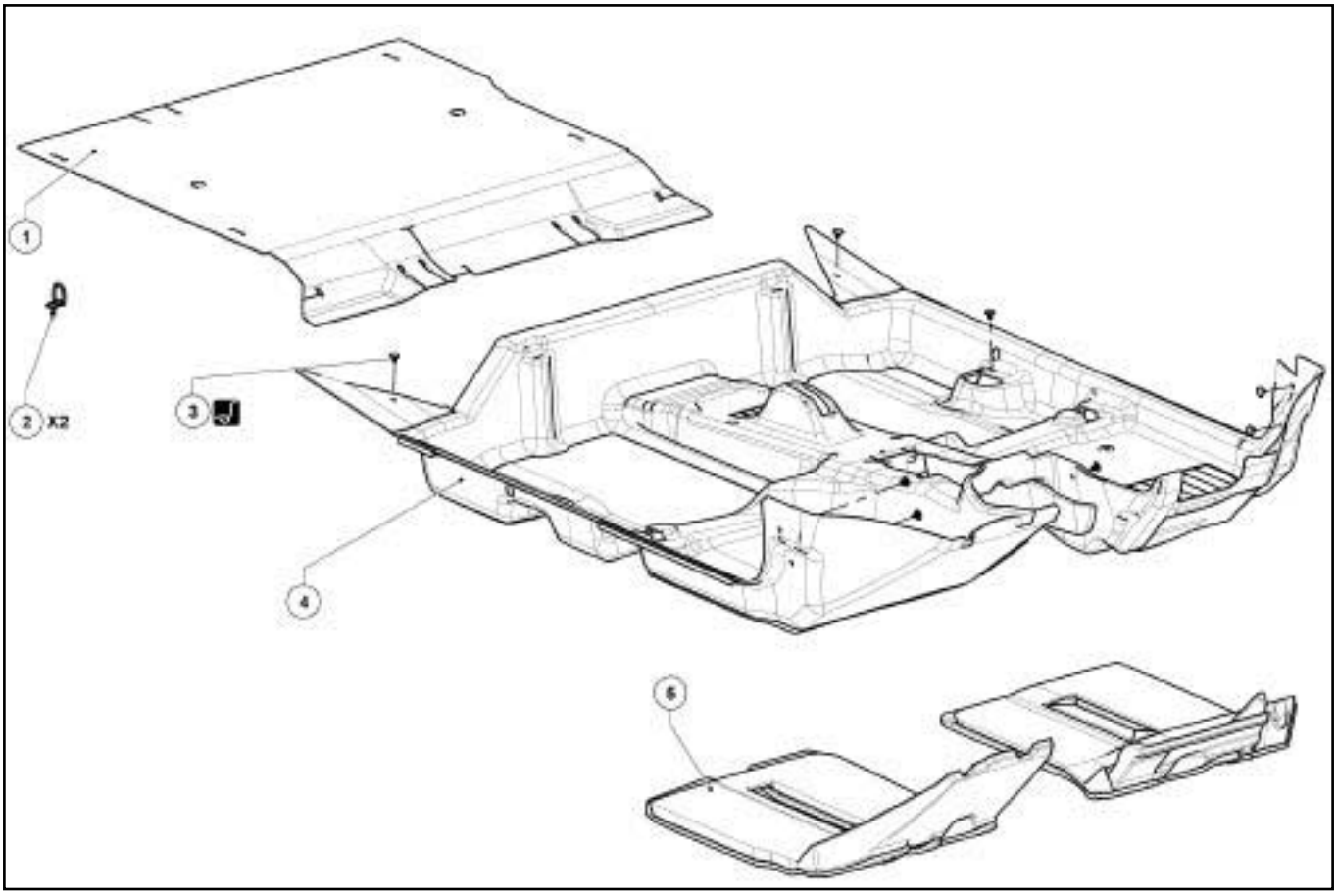

145785-1

(see) (01D, Mechanical introduction)

Mark	Description	Information
1	Luggage compartment carpet	
2	Lashing hook	
3	Floor carpet clip	Car. 1363
4	Floor carpet	
5	Floor soundproofing	

REMOVAL

I - REMOVAL PREPARATION OPERATION

❑ Remove:

- the front seats (see **Complete front seat: Removal - Refitting**) ,
- the centre console (see **Centre console: Removal - Refitting**) (MR 389, 57A, Interior equipment),
- the B-pillar linings (see **71A**, **Body internal trim**, **B-pillar trim: Removal - Refitting**, page **71A-9**) ,
- the side door seals partially.

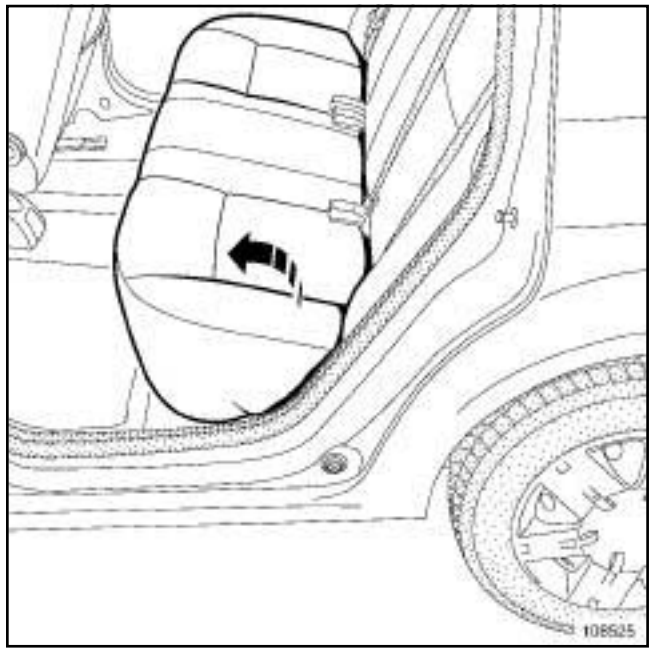

108525

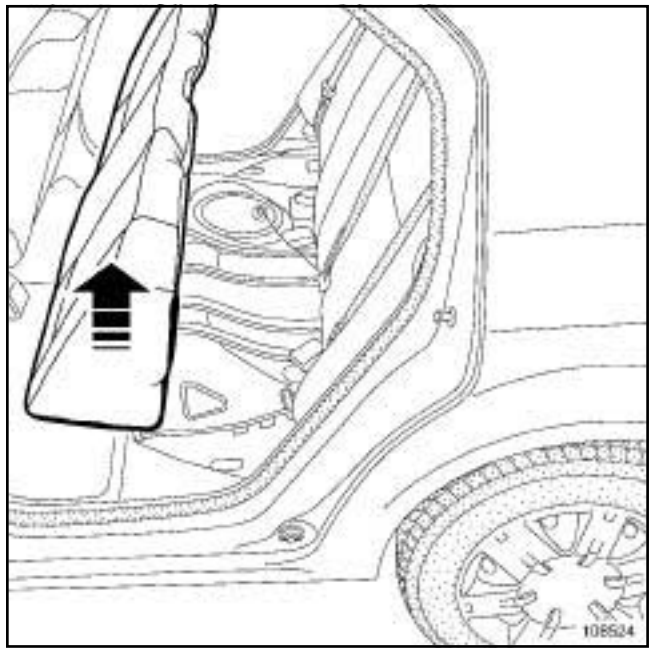

108524

❑ Remove the rear bench seat base .

II - OPERATION FOR REMOVAL OF PART CONCERNED

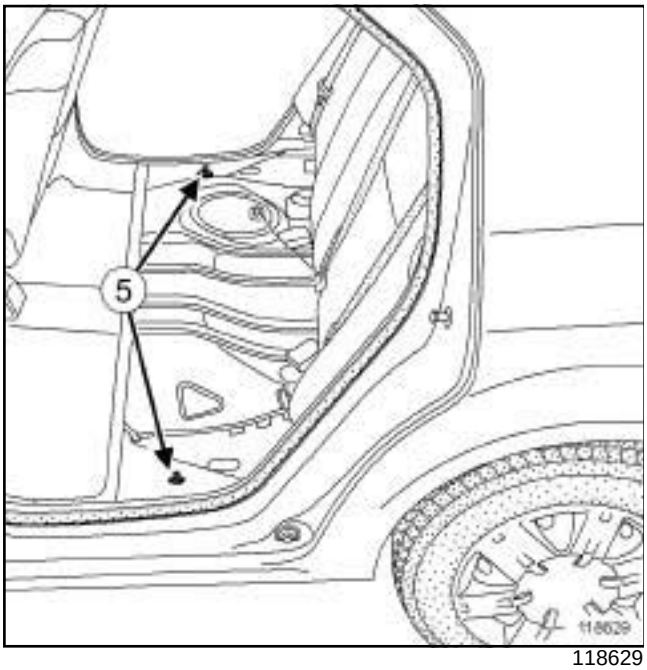

118629

❑ Remove the retaining clips (**5**) .

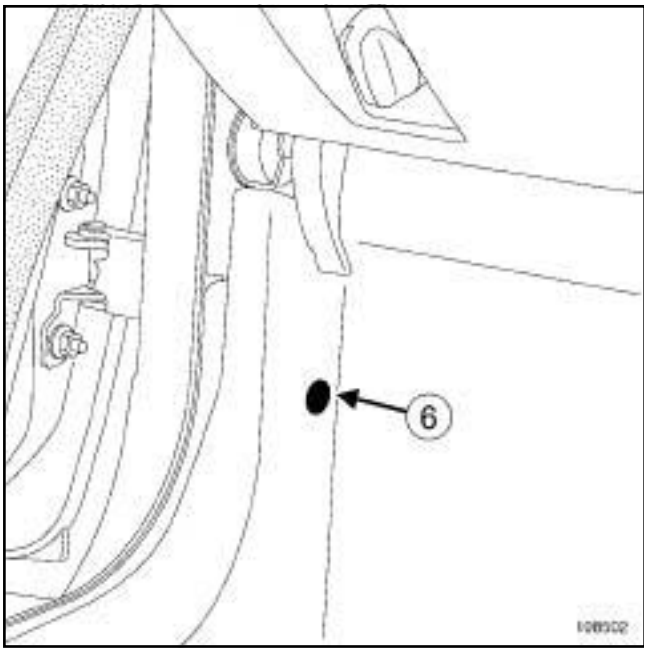

108502

❑ Remove clip (**6**) .

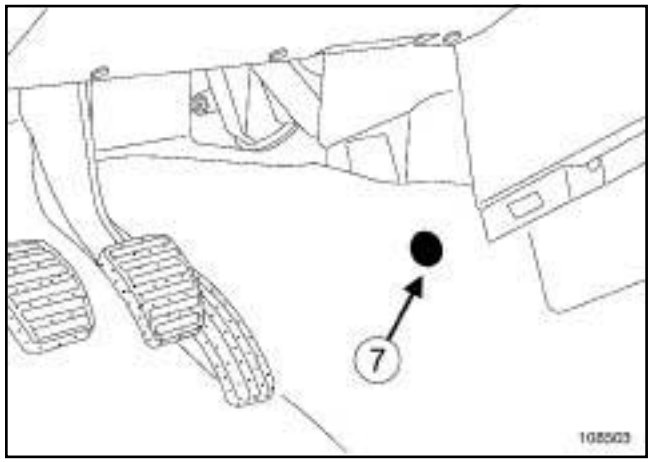

108503

❑ Remove clip (**7**) .

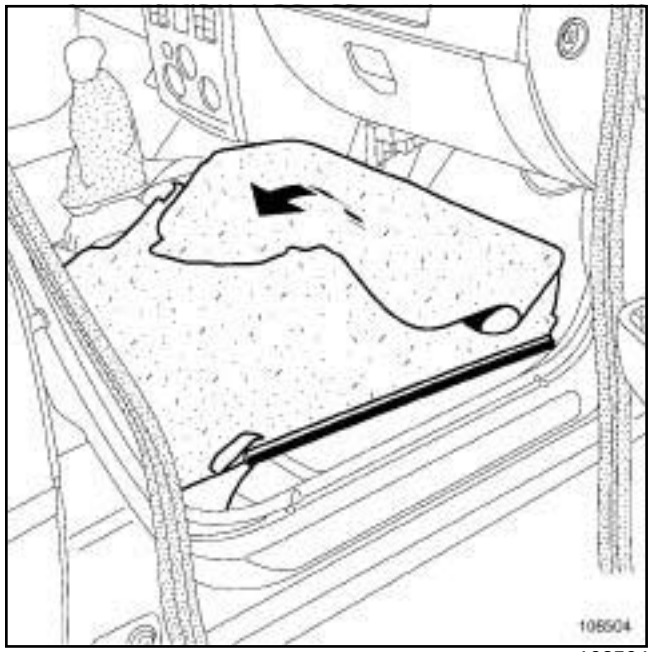

108504

❑ Pull away the carpet.

REFITTING

I - REFITTING OPERATION FOR PART CONCERNED

❑ Refit:

- the floor carpet,
- the clips ***(6)*** and ***(7)*** .

❑ Refit the retaining clips ***(5)*** .

II - FINAL OPERATION

❑ Refit the rear bench seat base.

❑ Refit:

- the side door seals,
- the B-pillar linings (see **71A**, **Body internal trim**, **B-pillar trim: Removal - Refitting**, page **71A-9**) ,
- the centre console (see **Centre console: Removal - Refitting**) (MR 389, 57A, Interior equipment),
- the front seats (see **Complete front seat: Removal - Refitting**) .

REMOVAL

I - REMOVAL PREPARATION OPERATION

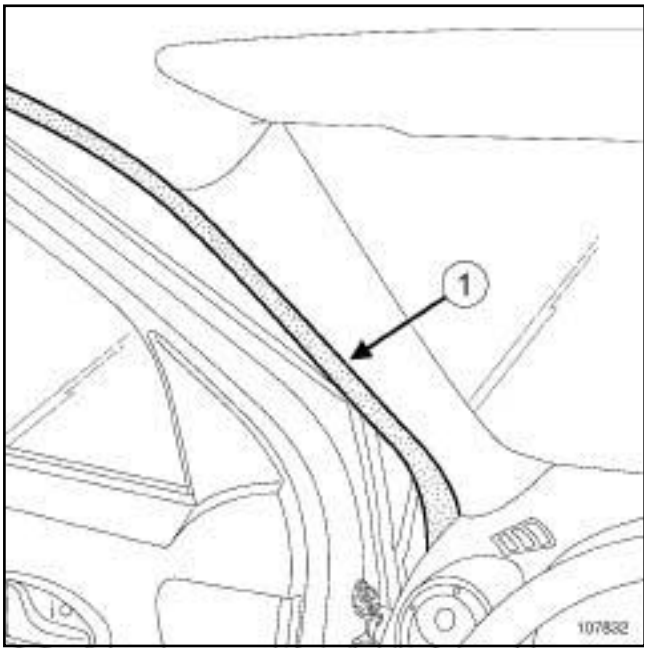

107832

❑ Partially remove door seal (**1**) .

II - REMOVAL OPERATION

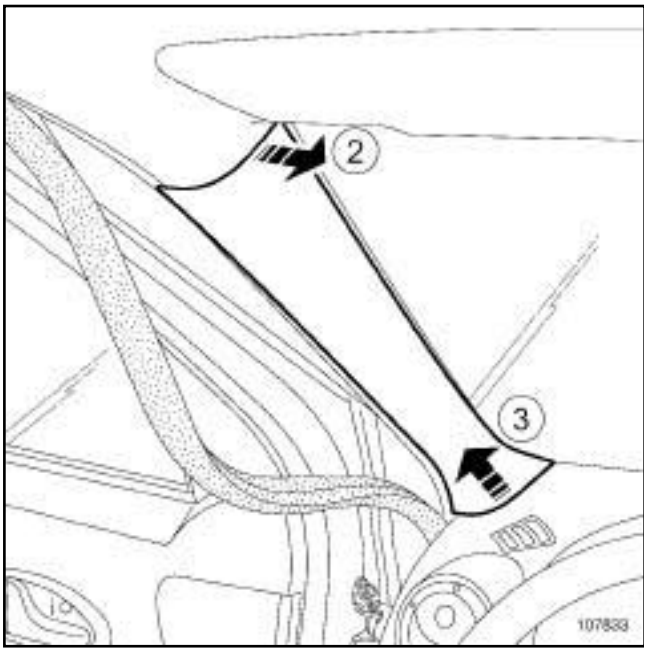

107833

❑ Remove the windscreen pillar trim by (**2**) and (**3**) .

REFITTING

❑ Proceed in the reverse order to removal.

Tightening torques ▽	
upper and lower bolts for the seat belt	**21 N.m**

REMOVAL

I - REMOVAL PREPARATION OPERATION

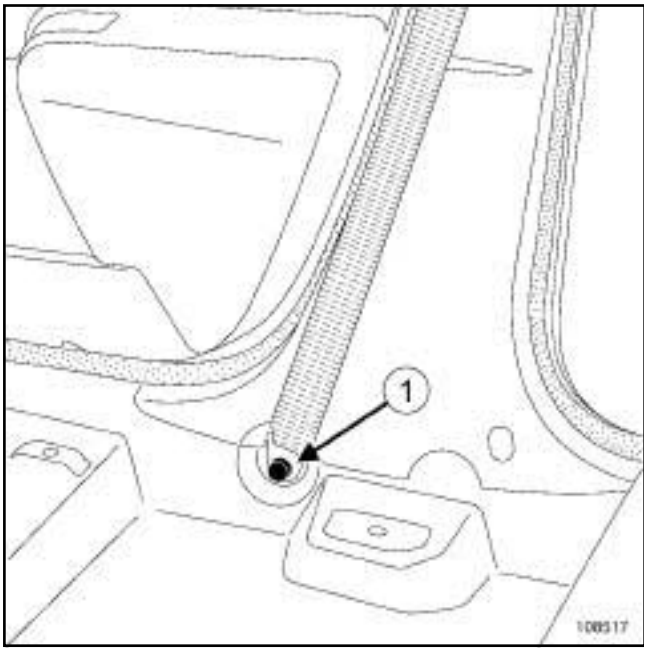

108517

❑ Remove the bolt (**1**) .

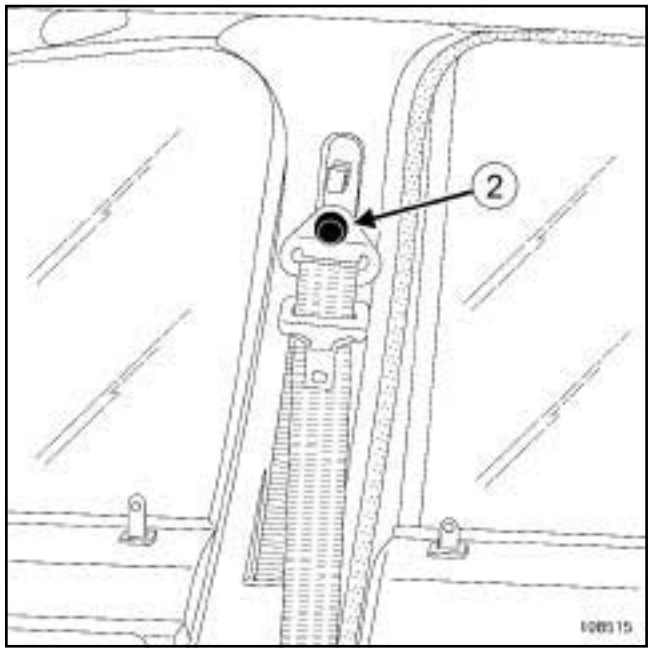

108515

❑ Remove:

- the cover,
- the bolt (**2**) .

II - OPERATION FOR REMOVAL OF PART CONCERNED

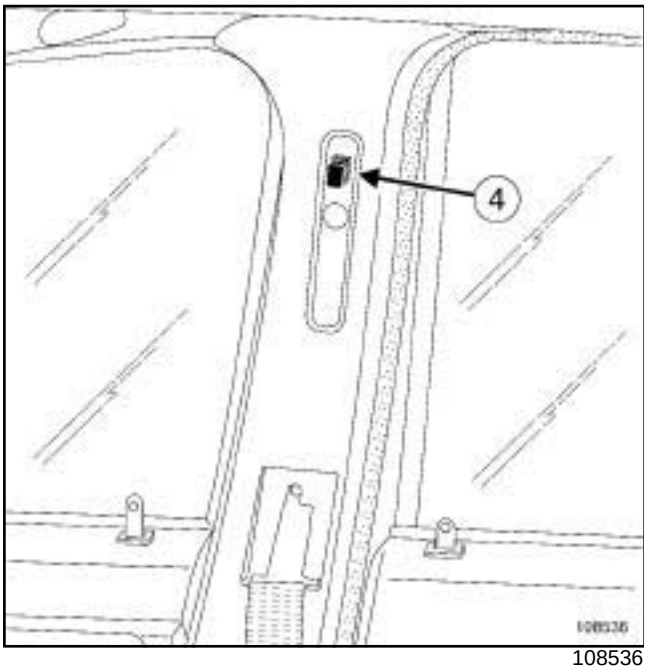

108536

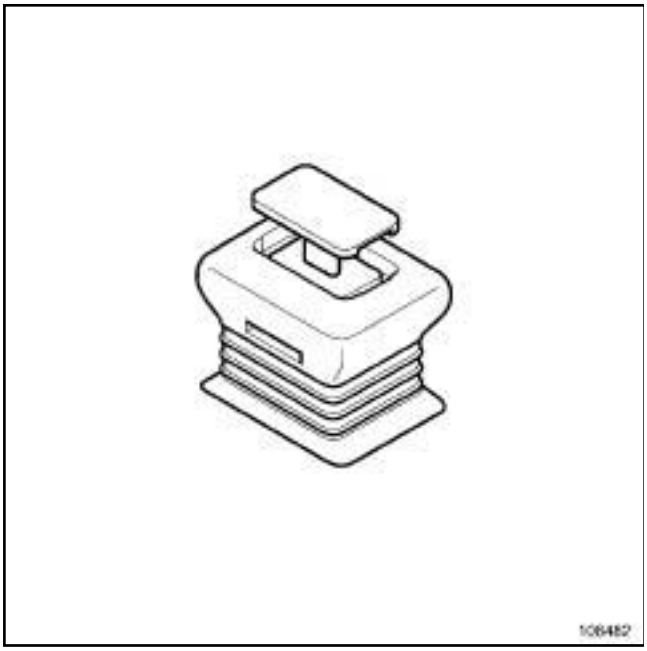

108482

❑ Remove:

- the control (**4**) using a flat screwdriver,
- the door seals (partially).

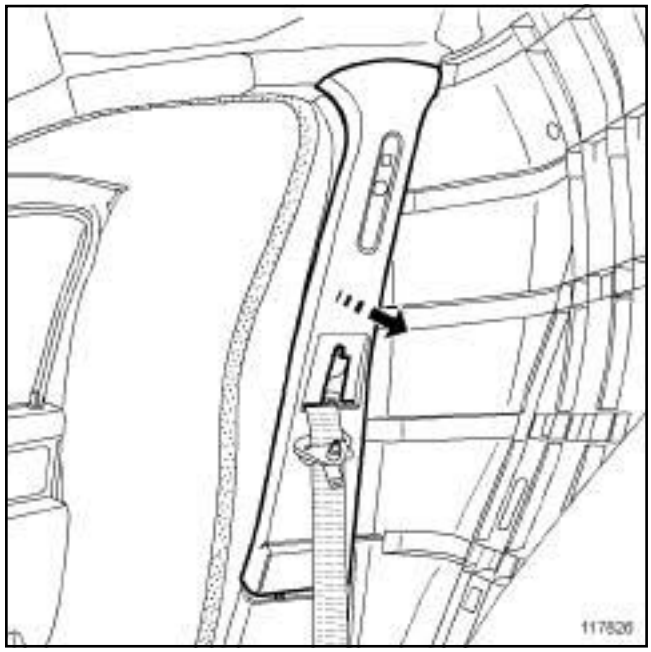

117826

❑ Remove the B-pillar upper trim.

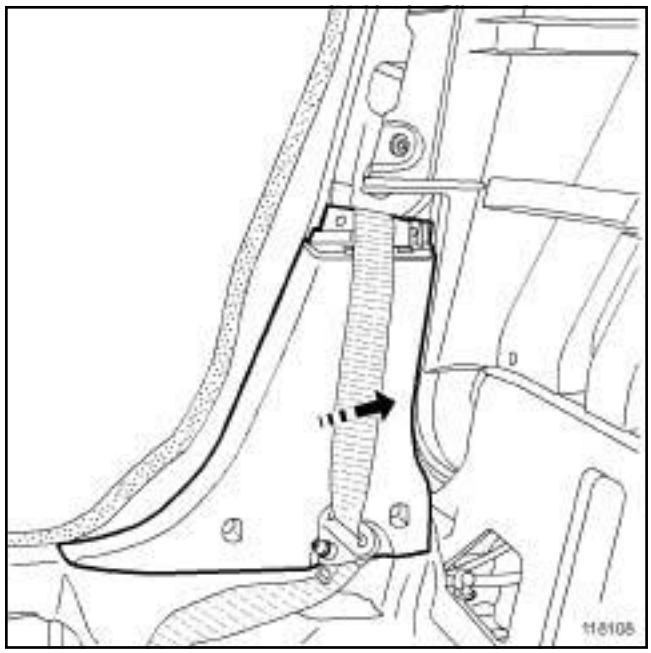

118108

❑ Remove the B-pillar lower trim.

REFITTING

I - REFITTING OPERATION FOR PART CONCERNED

❑ Refit:

- the B-pillar lower trim,
- the lower trim bolts,
- the B-pillar upper trim,

- the door seals,
- the seat belt adjustment control.

II - FINAL OPERATION

❏ Refit the upper and lower bolts for the seat belt.

❏ Tighten to torque the **upper and lower bolts for the seat belt (21 N.m)**.

❏ Refit the cover for the upper seat belt bolt.

REMOVAL

OPERATION FOR REMOVAL OF PART CONCERNED

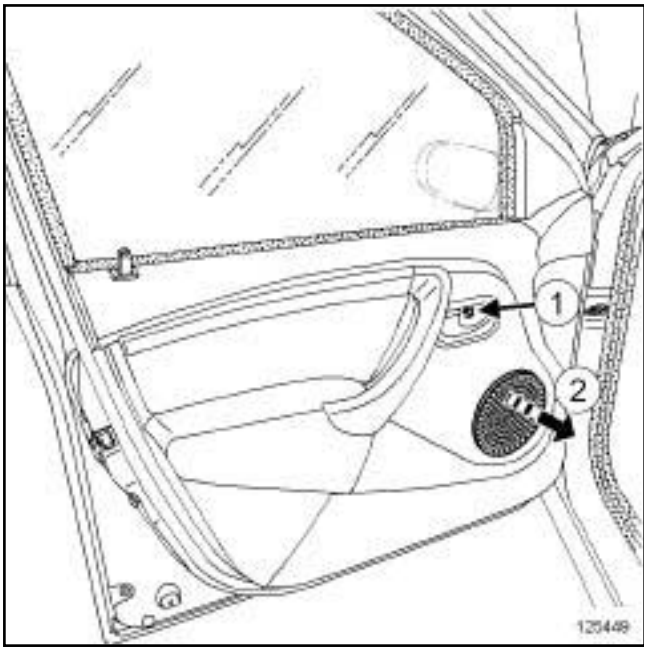

125449

❑ Remove:

- the bolt (**1**) ,
- the opening control,
- the speaker grille (**2**) .

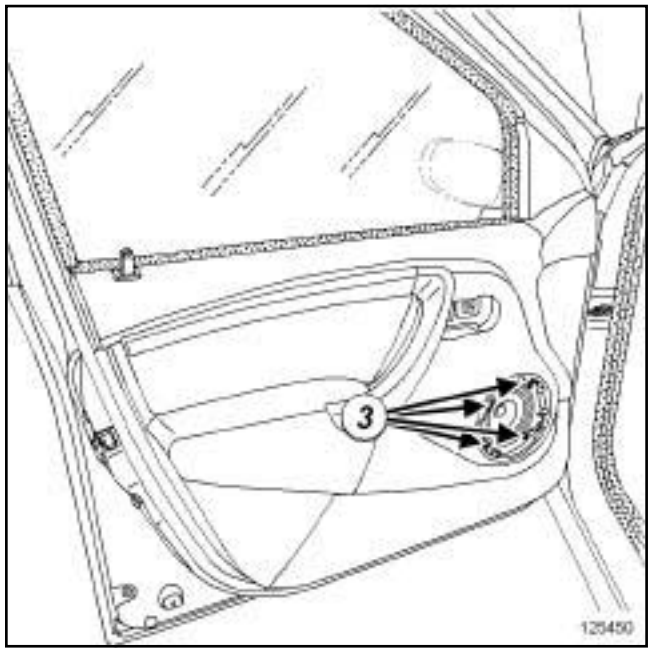

125450

❑ Remove:

- the bolts (**3**) ,
- the speaker.

❑ Disconnect the speaker connector.

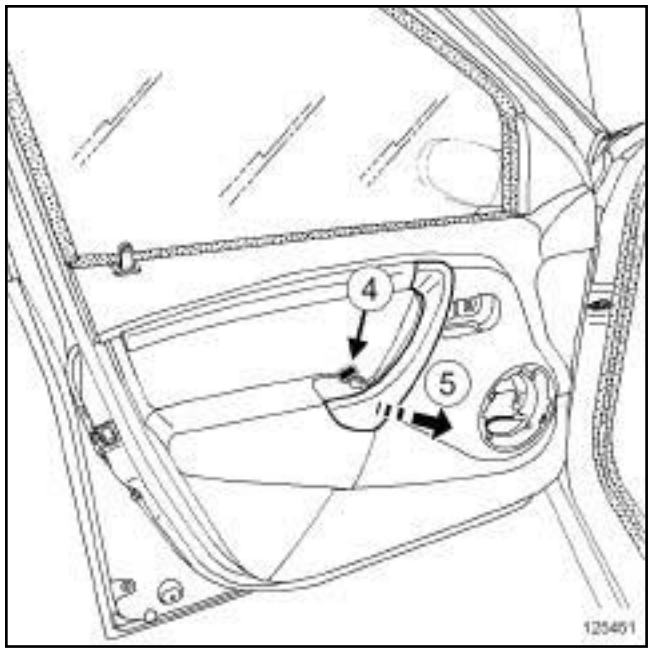

125451

❑ Unclip the trim (**4**) from the door trim bolt.

❑ Remove the cover from the interior handle (**5**) .

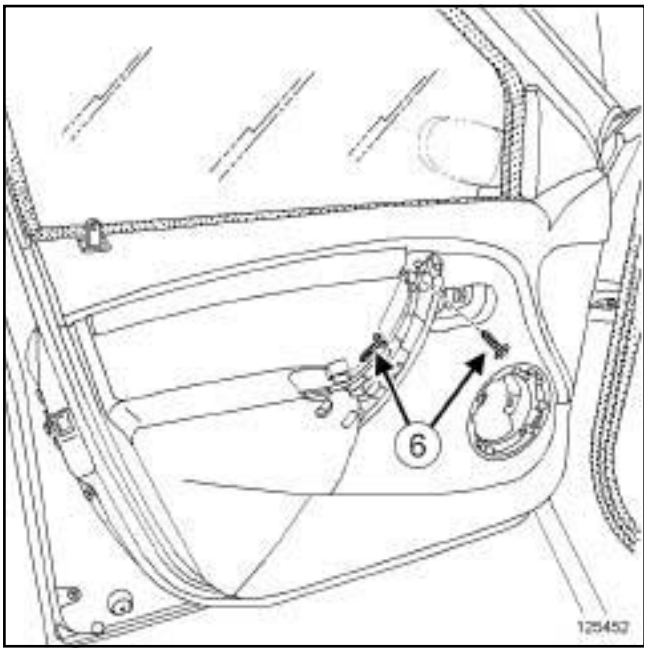

125452

❑ Remove the bolts (**6**) .

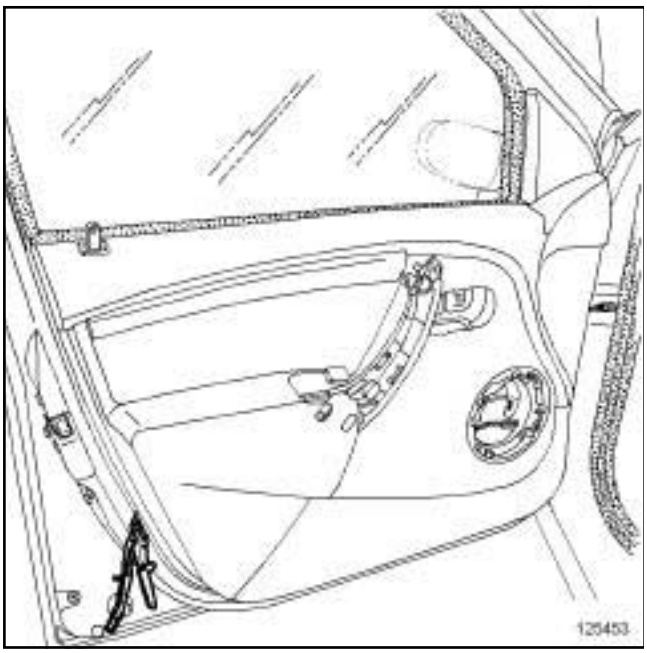

125453

❑ Unclip the front door trim using an unclipping tool.

REFITTING

I - REFITTING PREPARATION OPERATION

❑ If necessary, replace:

- the front door trim clips,
- the front door trim sealing mastic (part no.: **77 01 423 330**).

> Note:
>
> To make it easier to fit the trim, moisten the box section at the point where the seal is applied.

II - REFITTING OPERATION FOR PART CONCERNED

❑ Refit:

- the front door trim,
- the bolts (**6**) ,
- the interior handle cover (**5**) ,
- the trim (**4**) on the door trim bolt.

❑ Reconnect the speaker connector.

❑ Refit:

- the speaker,
- the speaker bolts (**3**) ,
- the speaker grille (**2**) ,
- the opening control,
- the opening control bolt (**1**) .

Special tooling required	
Car. 1363	Set of trim removal levers.

REMOVAL

I - REMOVAL PREPARATION OPERATION

❑ Remove:

- the rear side door interior handle (see **Rear side door interior opening control: Removal - Refitting**) (51A, Side opening element mechanisms).
- the rear side door window winder handle (see **Rear side door window winder handle: Removal - Refitting**) (51A, Side opening element mechanisms).

II - REMOVAL OPERATION

EQUIPMENT LEVEL E2

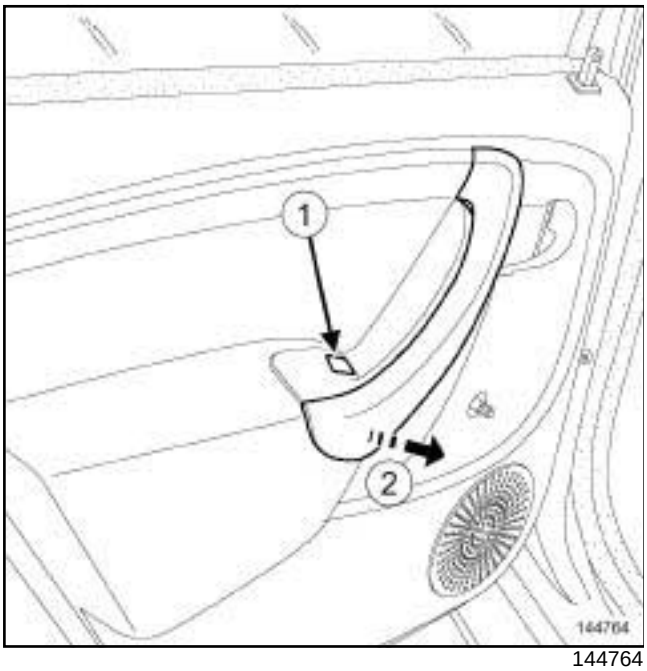

144764

❑ Unclip the blanking cover of the rear side door trim bolt (**1**) .

❑ Remove the rear side door interior handle cover using the tool **(Car. 1363)** by (**2**) .

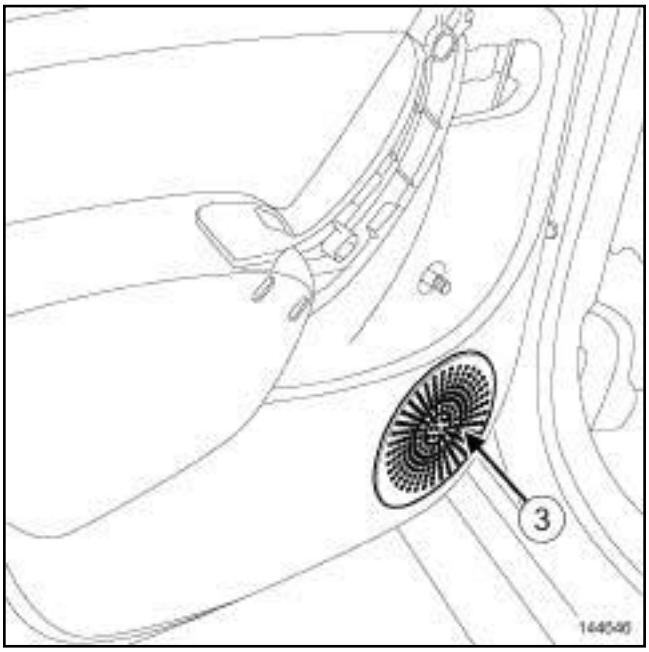

144646

❑ Remove the speaker grille (**3**)

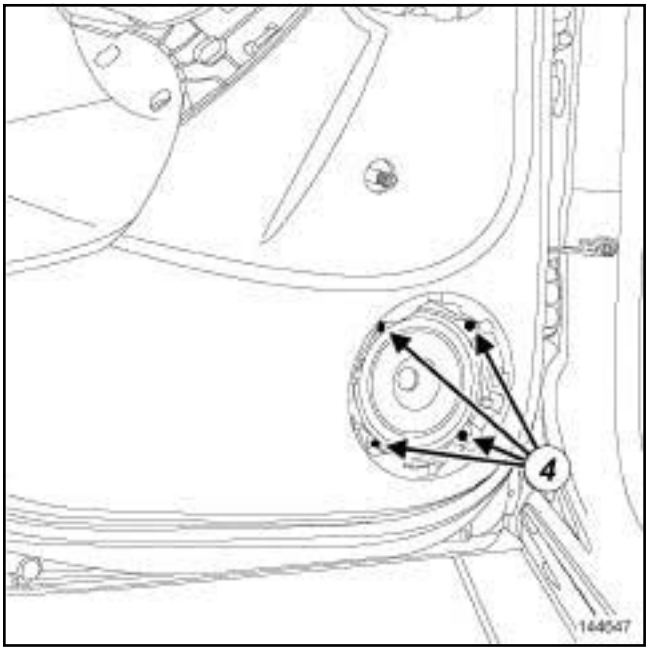

144647

❑ Remove:

- the speaker bolts (**4**) ,
- the speaker.

❑ Disconnect the speaker connector.

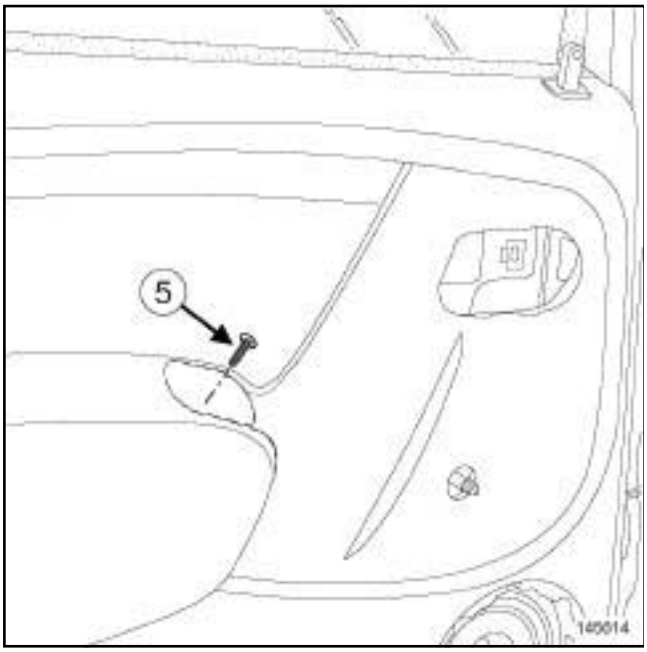

145614

❑ Remove the rear side door armrest bolt (**5**) .

EQUIPMENT LEVEL E2

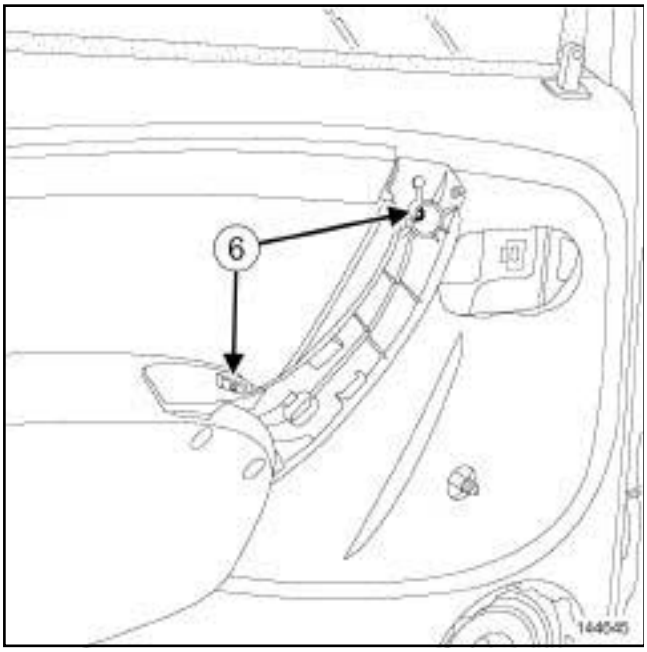

144645

❑ Remove the rear side door interior handle bolts (**6**) .

❑ Remove the rear side door trim using a pair of unclipping pliers.

REFITTING

I - REFITTING PREPARATION OPERATION

❑ Check the condition of the clips and replace them if necessary.

> Note:
>
> To facilitate fitting the rear side door trim, dampen the box section where the seal is to be applied.

❑ Re-apply the bead of sealing mastic on the rear side door trim using a **BEAD OF PREFORMED SEALING MASTIC** (see **Vehicle: Parts and consumables for the repair**) (04B, Consumables - Products).

II - REFITTING OPERATION

❑ Proceed in the reverse order to removal.

III - SPECIAL NOTES FOR REFITTING THE MANUAL WINDOW WINDER

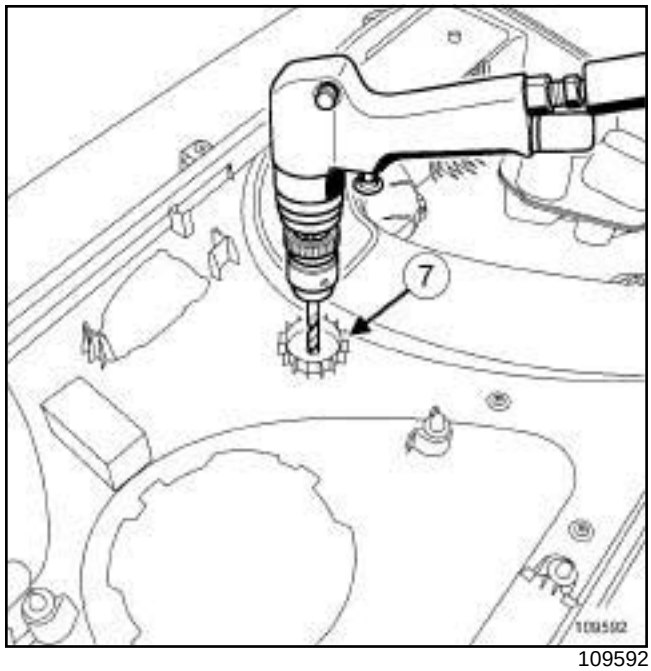

109592

❑ Drill the trim at the centre of the mark (**7**) .

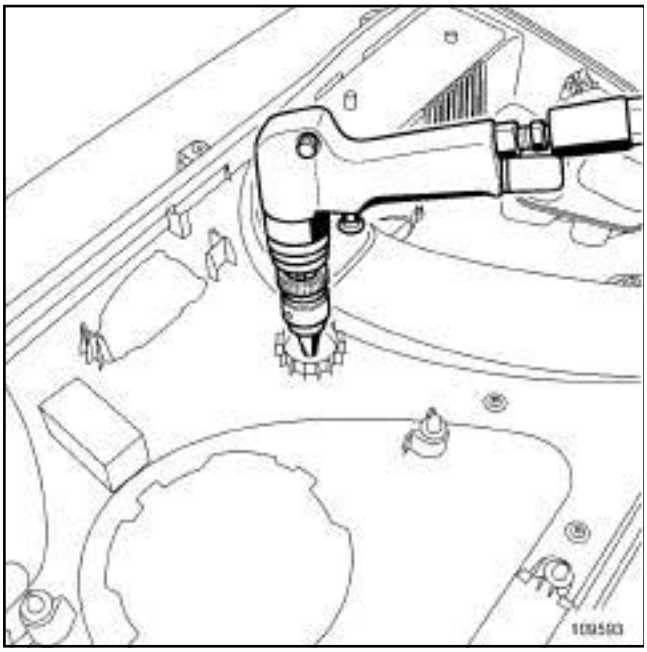

109593

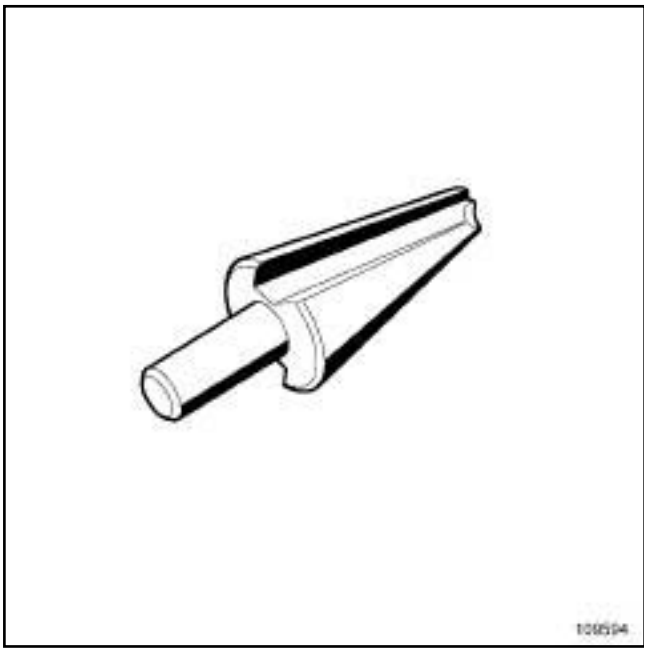

109594

❑ Finish the operation using a conical milling cutter.

NON-SIDE OPENING ELEMENTS TRIM

Rear opening element assembly on the passenger compartment side: Exploded view

73A

H79

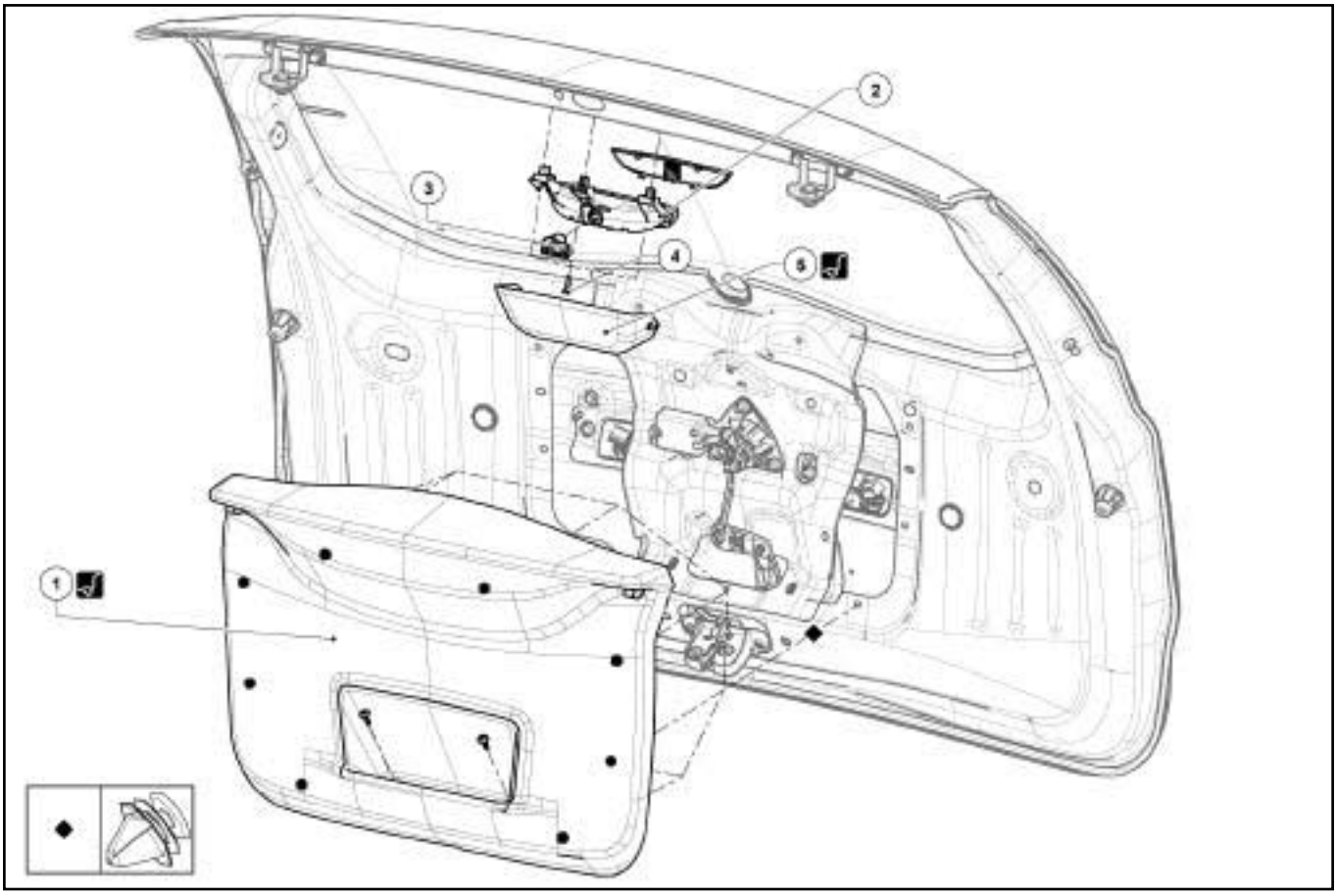

146251

(see) (01D, Mechanical introduction).

Mark	Description	Information
1	Tailgate trim	(Car. 1363)
2	High level brake light	
3	bulb	
4	high level brake light bolt	
5	High level brake light cover	(Car. 1363)

DRIVER HEIGHT ADJUSTER

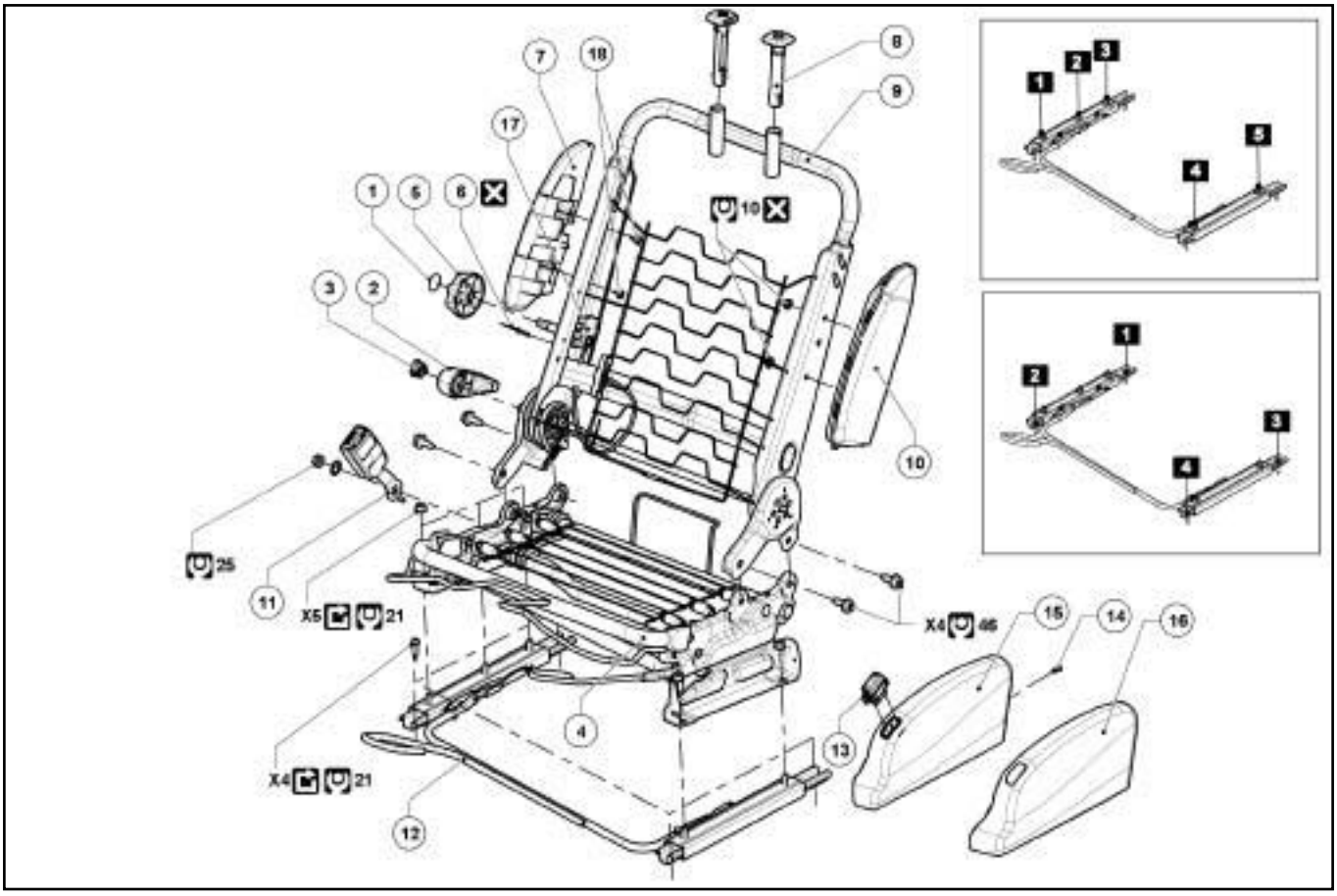

146024

(see)

Mark	Description	Information
1	Front seat lumbar adjustment control trim	
2	Front seat backrest tilt control	
3	Front seatback angle control trim	
4	Front seat base frame	
5	Front seat lumbar adjustment control	
6	Front seat lumbar adjustment mechanism rivet	
8	Front seat headrest guide	(see)
9	Front seat frame	(see)
11	Front seat belt buckle	(see **Front seat belt buckle: Removal - Refitting**)
12	Front seat runner	

DRIVER HEIGHT ADJUSTER

Mark	Description	Information
14	Bolt of front seat base exterior casing	
16	Front seat base exterior casing	
17	Front seat lumbar adjustment mechanism	

FRONT SIDE AIRBAG or FRONT SIDE + CURTAIN AIRBAG

Mark	Description	Information
7	Front seat chest-level side airbag dummy module	
10	Front seat chest-level side airbag	(see **Front (chest-level) side airbag: Removal - Refitting**)
18	Bolt of front seat chest-level side airbag dummy module	

FRONT SEAT WITH HEATING

Mark	Description	Information
13	Front seat heated pad switch	
15	Front seat base exterior casing	

DRIVER HEIGHT ADJUSTER

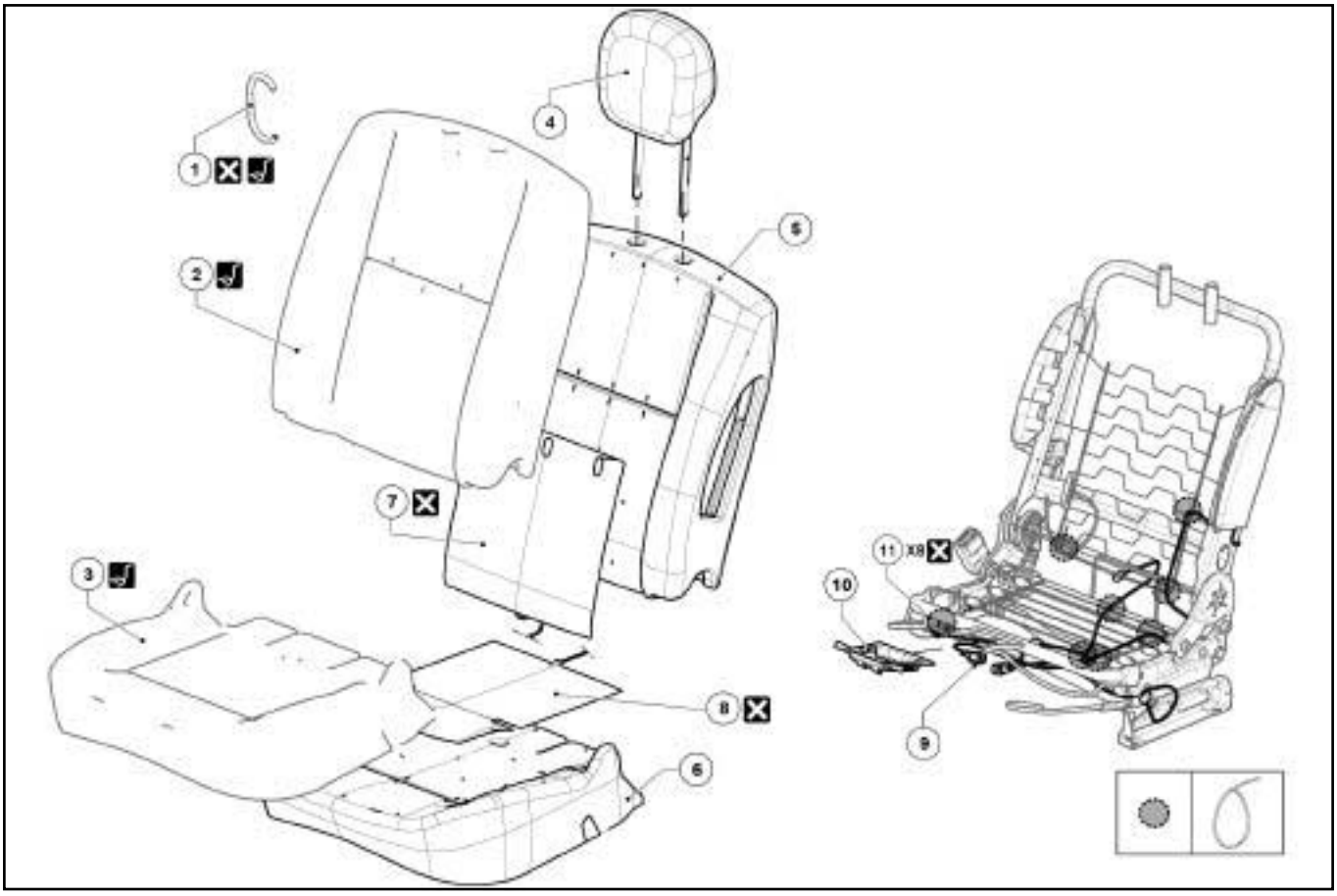

146025

(see)

Mark	Description	Information
1	Seat trim clip	(Car.1521)
2	Front seatback cover	(see)
3	Front seat base cover	(see)
4	Front seat headrest	(see)
5	Front seat back foam	
6	Front seat base foam	

FRONT SIDE AIRBAG, and FRONT SEAT WITH HEATING, and WITH SEAT BELT NOT SECURED WARNING

Mark	Description	Information
9	Front seat electrical wiring	

DRIVER HEIGHT ADJUSTER

Mark	Description	Information
10	Front seat electrical wiring support	
11	Retaining clip	

FRONT SEAT WITH HEATING

Mark	Description	Information
7	Front seatback heated pad	
8	Front seat base heated pad	

FIXED SUBFRAME

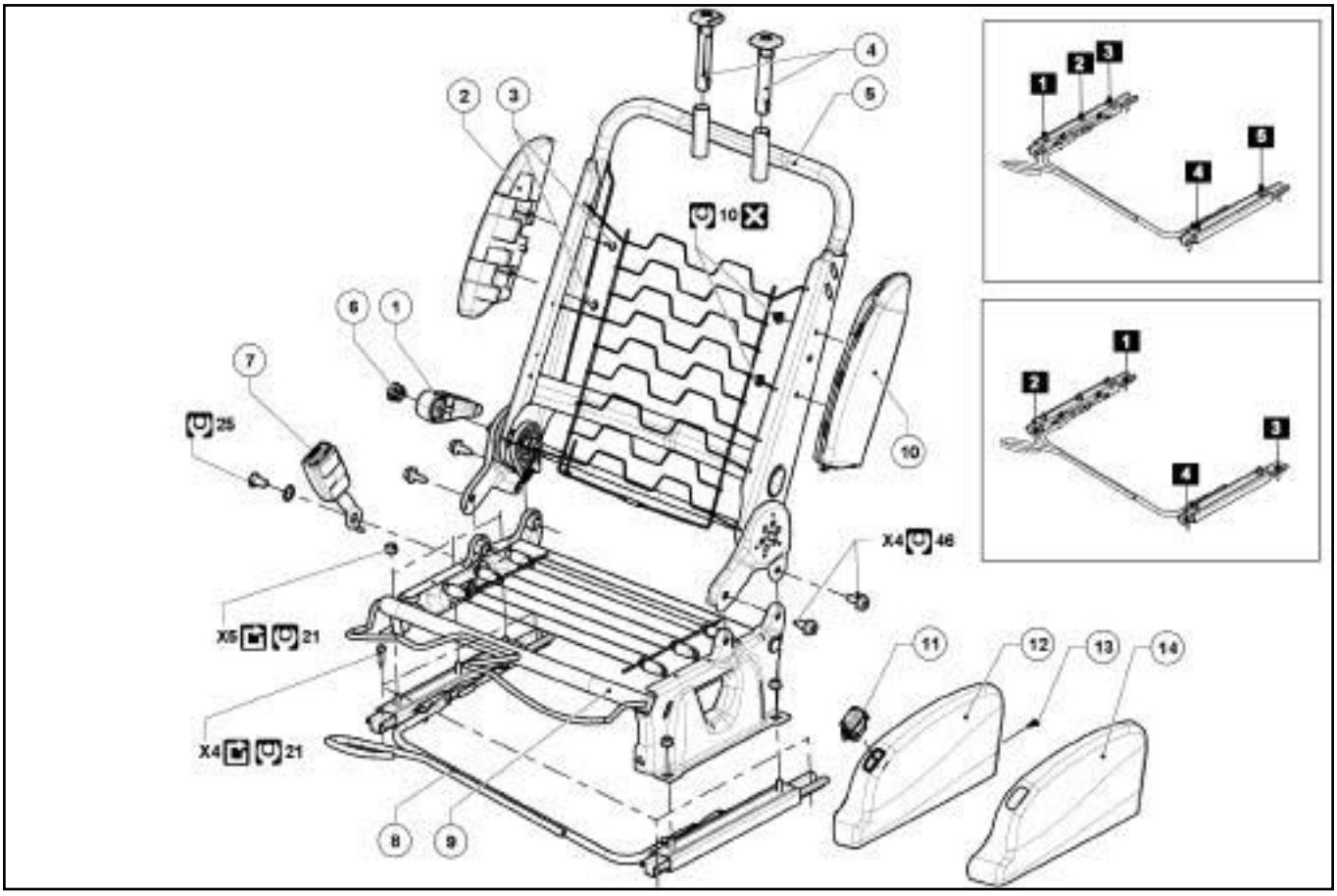

146034

(see)

Mark	Description	Information
1	Front seat backrest tilt control	
4	Front seat headrest guide	(see)
5	Front seat frame	(see)
6	Front seatback angle control trim	
7	Front seat belt buckle	(see **Front seat belt buckle: Removal - Refitting**)
8	Front seat runner	
9	Front seat base frame	
13	Bolt of front seat base exterior casing	
14	Front seat base exterior casing	

FIXED SUBFRAME

FRONT SIDE AIRBAG or FRONT SIDE + CURTAIN AIRBAG

Mark	Description	Information
2	Front seat chest-level side airbag dummy module	
3	Bolt of front seat chest-level side airbag dummy module	
10	Front seat chest-level side airbag	(see **Front (chest-level) side airbag: Removal - Refitting**)

FRONT SEAT WITH HEATING

Mark	Description	Information
11	Front seat heated pad switch	
12	Front seat base exterior casing	

FIXED SUBFRAME

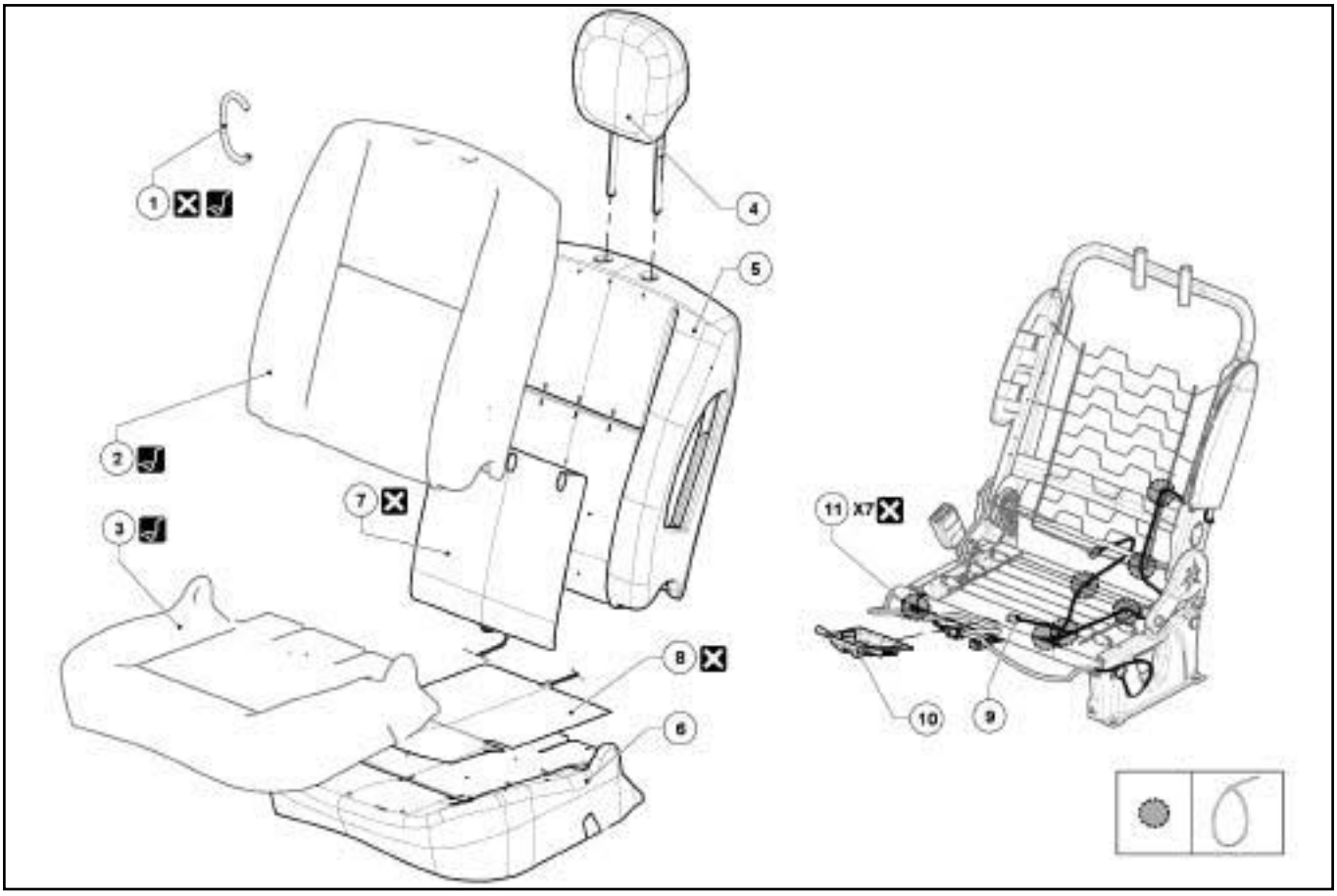

146035

(see)

Mark	Description	Information
1	Seat trim clip	(Car.1521)
2	Front seatback cover	(see)
3	Front seat base cover	(see)
4	Front seat headrest	(see)
5	Front seat back foam	
6	Front seat base foam	

FRONT SEAT WITH HEATING

Mark	Description	Information
7	Front seatback heated pad	
8	Front seat base heated pad	

FIXED SUBFRAME

FRONT SIDE AIRBAG, and FRONT SEAT WITH HEATING, and WITH SEAT BELT NOT SECURED WARNING

Mark	Description	Information
9	Front seat electrical wiring	
10	Front seat electrical wiring support	
11	Retaining clip	

RENAULT

8 Electrical equipment

80A BATTERY

80B HEADLIGHTS

81A REAR LIGHTING

81B INTERIOR LIGHTING

81C FUSES

82A ENGINE IMMOBILISER

82B HORN

83A INSTRUMENT PANEL

84A CONTROL - SIGNALS

85A WIPING - WASHING

86A RADIO

X79

NOVEMBER 2009 EDITION ANGLAISE

"The repair procedures given by the manufacturer in this document are based on the technical specifications current when it was prepared.

The procedures may be modified as a result of changes introduced by the manufacturer in the production of the various component units and accessories from which the vehicles are constructed".

All rights reserved by Renault.

Copying or translating, in part or in full, of this document or use of the service part reference numbering system is forbidden without the prior written authority of Renault.

© Renault s.a.s 2007

87B PASSENGER COMPARTMENT CONNECTION UNIT

87D ELECTRIC WINDOWS - SUNROOF

87G ENGINE COMPARTMENT CONNECTION UNIT

88A WIRING HARNESS

88C AIR BAG AND PRETENSIONERS

X79

NOVEMBER 2009 EDITION ANGLAISE

"The repair procedures given by the manufacturer in this document are based on the technical specifications current when it was prepared.

The procedures may be modified as a result of changes introduced by the manufacturer in the production of the various component units and accessories from which the vehicles are constructed".

All rights reserved by Renault.

Copying or translating, in part or in full, of this document or use of the service part reference numbering system is forbidden without the prior written authority of Renault.

© Renault s.a.s 2007

DUSTER - Chapitre 8

Contents

Pages

80A BATTERY

Battery: Precautions for the repair 80A-1

Battery: Removal - Refitting 80A-2

80B HEADLIGHTS

Headlight assembly: Exploded view 80B-1

Headlight: Removal - Refitting 80B-2

Headlight: Adjustment 80B-3

Headlight bulb: Removal - Refitting 80B-5

Front fog light bulb: Removal - Refitting 80B-6

Front fog light: Removal - Refitting 80B-7

Side indicator: Removal - Refitting 80B-8

Remote headlight beam adjustment actuator: Removal - Refitting 80B-9

81A REAR LIGHTING

Rear light assembly: Exploded view 81A-1

Rear wing light: Removal - Refitting 81A-2

Rear light bulb: Removal - Refitting 81A-3

3rd brake light: Removal - Refitting 81A-4

High level brake light bulb: Removal - Refitting 81A-5

Number plate light: Removal - Refitting 81A-6

81B INTERIOR LIGHTING

Interior lighting: List and location of components 81B-1

Interior light: Removal - Refitting 81B-3

Door switch: Removal - Refitting 81B-4

Storage compartment light: Removal - Refitting 81B-5

Luggage compartment light: Removal - Refitting 81B-6

Contents

81C FUSES

Fuses: List and location of components 81C-1

82A ENGINE IMMOBILISER

Immobiliser system: List and location of components 82A-1

Ignition switch: Removal - Refitting 82A-3

Transponder ring: Removal - Refitting 82A-5

Battery for remote door locking control: Removal - Refitting 82A-7

82B HORN

Audible warning: Removal - Refitting 82B-1

83A INSTRUMENT PANEL

Instrument panel: Removal - Refitting 83A-1

84A CONTROL - SIGNALS

Rotary switch: Removal - Refitting 84A-1

Steering column switch assembly: Removal - Refitting 84A-2

Screen wiper switch: Removal - Refitting 84A-5

Signals and lighting switch: Removal - Refitting 84A-6

Hazard warning lights switch: Removal - Refitting 84A-8

84A CONTROL - SIGNALS

Central door locking switch: Removal - Refitting 84A-9

Remote headlight beam adjustment control: Removal - Refitting 84A-10

Exterior rear view mirror control switch: Removal - Refitting 84A-12

Heated rear screen switch: Removal - Refitting 84A-13

Heated seat pad switch: Removal - Refitting 84A-14

85A WIPING - WASHING

Wiping and washing: List and location of components 85A-1

Windscreen wiper blade: Removal - Refitting 85A-3

Windscreen wiper arm: Removal - Refitting 85A-4

Windscreen wiper motor: Removal - Refitting 85A-5

Windscreen wiper mechanism: Removal - Refitting 85A-8

Rear screen wiper arm: Removal - Refitting 85A-11

Rear screen wiper motor: Removal - Refitting 85A-12

Screen washer pump: Removal - Refitting 85A-14

Front screen washer jet: Removal - Refitting 85A-15

Rear screen washer jet: Removal - Refitting 85A-16

Windscreen washer reservoir: Removal - Refitting 85A-17

Contents

86A RADIO

Radio: List and location of components 86A-1

Radio: Removal - Refitting 86A-3

Radio aerial: Removal - Refitting 86A-4

Front speakers: Removal - Refitting 86A-5

Rear speakers: Removal - Refitting 86A-6

Radio control satellite: Removal - Refitting 86A-7

87B PASSENGER COMPARTMENT CONNECTION UNIT

UCH: Removal - Refitting 87B-1

87D ELECTRIC WINDOWS - SUNROOF

Electric window: List and location of components 87D-1

Front electric window switch: Removal - Refitting 87D-2

Rear electric window switch: Removal - Refitting 87D-3

87G ENGINE COMPARTMENT CONNECTION UNIT

Engine compartment connection unit: List and location of components 87G-1

88A WIRING HARNESS

Computers: List and location of components 88A-1

Diagnostic socket: List and location of components 88A-2

88A WIRING HARNESS

Wiring: Precautions for the repair 88A-3

Front bumper wiring: Removal - Refitting 88A-4

Engine wiring: Removal - Refitting 88A-5

Passenger compartment front wiring: Removal - Refitting 88A-25

Passenger compartment rear wiring: Removal - Refitting 88A-33

88C AIR BAG AND PRETENSIONERS

Airbag and pretensioners: List and location of components 88C-1

Airbag and pretensioners: Precautions for the repair 88C-3

Airbag computer: Removal - Refitting 88C-4

Driver's frontal airbag: Removal - Refitting 88C-6

Passenger's frontal airbag: Removal - Refitting 88C-9

Front (chest-level) side airbag: Removal - Refitting 88C-12

Side impact sensor: Removal - Refitting 88C-14

Front seat belt buckle: Removal - Refitting 88C-16

Rear seat belt buckle: Removal - Refitting 88C-17

Front side seat belt: Removal - Refitting 88C-18

Rear side seat belt: Removal - Refitting 88C-22

Contents

88C AIR BAG AND PRETENSIONERS

Rear centre seat belt: Removal - Refitting 88C-23

Seat belt reminder warning light: Removal - Refitting 88C-26

I - SAFETY

1 - DANGER: RISK FROM ACID LINKED TO HANDLING

Sulphuric acid is a highly aggressive and toxic substance which corrodes most metals.

When handling batteries, it is very important to take the following precautions:

- protect your eyes by wearing goggles,

- wear acid-proof gloves and clothing.

IMPORTANT

A battery contains sulphuric acid, a dangerous substance.

If acid splashes on to your clothing, rinse all contaminated areas thoroughly in water.

If it comes into contact with the skin or eyes, seek medical attention.

2 - DANGER: RISK OF EXPLOSION LINKED TO CHARGING AND TO INCORRECT TIGHTENING OF THE TERMINALS.

IMPORTANT

To prevent damaging the battery or even causing it to explode, do not place any heat sources or create any sparks near a charging battery.

WARNING

Incorrect tightening could cause heating of contacts, starting or charging faults, sparking, or could cause the battery to explode.

When a battery is charging, oxygen and hydrogen are produced. The mixture of these two gases is explosive.

The smallest of sparks or heat sources can cause an explosion. The explosion is so strong that the battery can shatter and spray the acid into the surrounding atmosphere.

People nearby are at risk (exploded fragments, acid splashes). Acid splashes are dangerous. They also damage clothing.

Safeguarding against the danger of explosion, which can be caused by handling a battery carelessly, must be taken very seriously.

IMPORTANT

To avoid all risk of sparks, ensure that all electrical consumers are fully switched off.

When a battery is being charged inside a building, switch off the charger before connecting or disconnecting the battery.

Do not place any metallic items on the battery as this may create a short circuit across the terminals.

Never hold a naked flame, welding gun, blowtorch, cigarette or lighted match near to a battery.

II - GENERAL RECOMMENDATIONS

WARNING

These vehicles are equipped with a battery with low water consumption. Topping up the electrolyte is therefore prohibited.

WARNING

Before disconnecting the battery:

- wait for the motor-driven fan assembly to stop,

- wait for the computer to finish saving (**1 minute**).

WARNING

Some vehicles are only fitted with «TB» (low height) batteries. To avoid damaging the bonnet, only refit a battery which is identical to the battery originally fitted.

Tightening torques ▽	
battery bracket bolt	**12 Nm**
bolt on the positive battery terminal	**6 N.m**
negative battery terminal nut	**6 N.m**

IMPORTANT
Consult the safety and cleanliness advice and operation recommendations before carrying out any repair (see **80A**, **Battery**, **Battery: Precautions for the repair**, page **80A-1**) .

REMOVAL

I - REMOVAL PREPARATION OPERATION

❏ Switch off the ignition.

WARNING

Before disconnecting the battery:

- wait for the motor-driven fan assembly to stop,
- wait for the computer to finish saving (**1 minute**).

WARNING
The visual indicator cannot be considered reliable in After-Sales; do not use it to determine the state of the battery.

II - OPERATION FOR REMOVAL OF PART CONCERNED

1 - DISCONNECTING

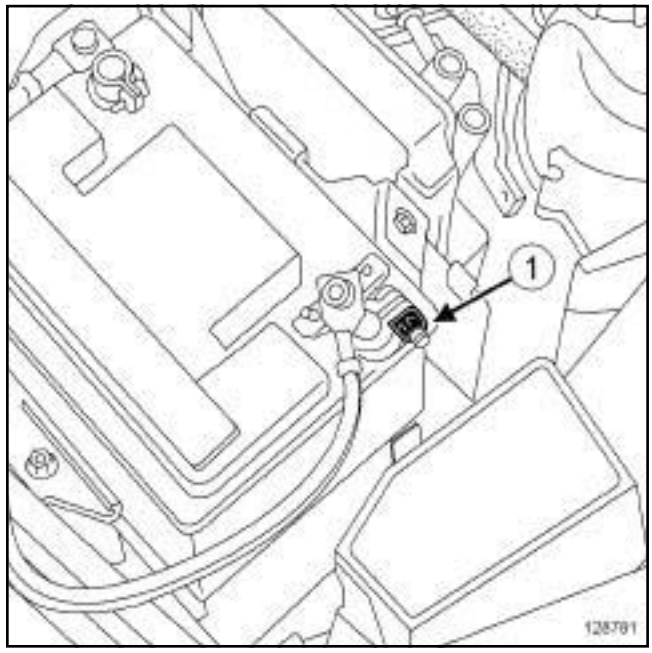

128781

❏ Undo the negative battery terminal nut (**1**) .

Note:
Mark the position of the negative battery terminal.

❏ Remove the negative battery terminal.

2 - REMOVAL

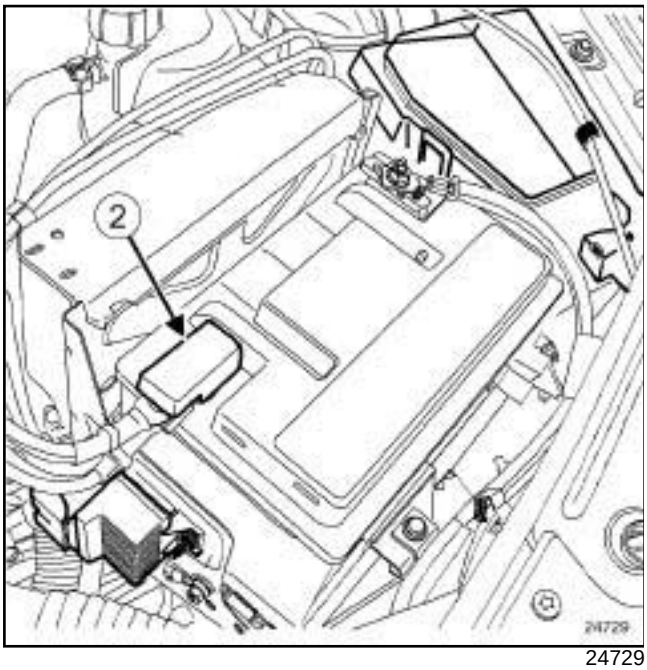

24729

❑ Remove the cover (**2**) from the positive battery terminal.

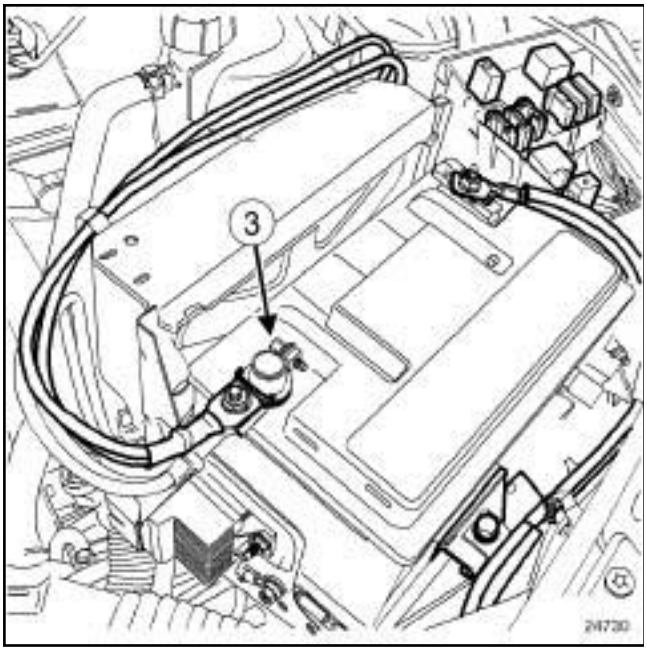

24730

❑ Loosen the bolt (**3**) of the positive battery terminal.

> Note:
>
> Mark the position of the positive battery terminal.

❑ Remove the positive battery terminal.

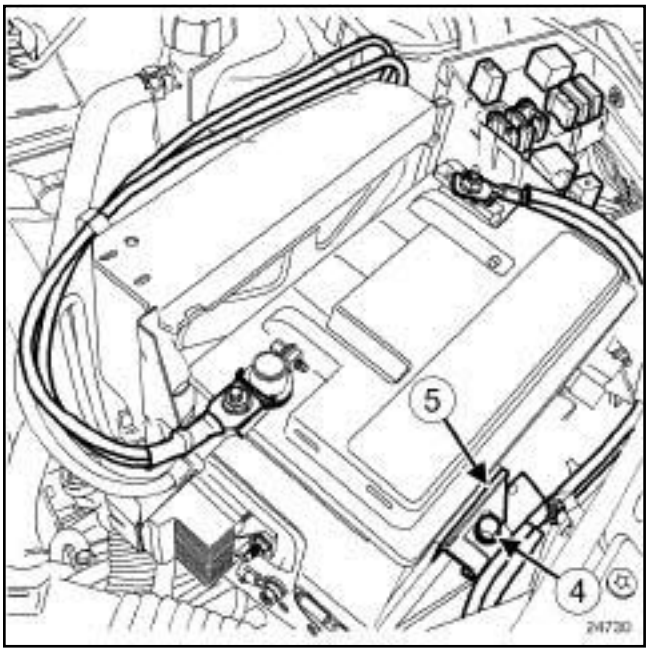

24730

❑ Remove:

- the battery clamp bolt (**4**) ,
- the mounting clamp (**5**) ,
- the battery.

3 - REPLACEMENT

❑ Check that the battery needs replacing (see **Technical Note 6014A, Checking the charging circuit, 16A, Starting-charging, Checking the charging circuit: Tests**).

REFITTING

I - REFITTING PREPARATION OPERATION

❑ Check the battery (see **Technical Note 9860A, 80A, Battery**).

II - REFITTING OPERATION FOR PART CONCERNED

1 - REFITTING

❑ Position the battery in its housing.

❑ Refit:

- the battery mounting clamp,
- the battery bracket bolt.

❑ Torque tighten the **battery bracket bolt (12 Nm)**.

- ❏ Push the positive battery terminal fully onto the battery terminal post.

> **WARNING**
> Poor contact may cause starting or charging faults, create sparks and cause the battery to explode (see **80A**, **Battery**, **Battery: Precautions for the repair**, page **80A-1**) .

- ❏ Torque tighten the **bolt on the positive battery terminal (6 N.m)**.
- ❏ Refit the positive terminal cover.

2 - CONNECTION

- ❏ Push the negative battery terminal fully onto the battery terminal post.

> **WARNING**
> Poor contact may cause starting or charging faults, create sparks and cause the battery to explode (see **80A**, **Battery**, **Battery: Precautions for the repair**, page **80A-1**) .

- ❏ Torque tighten the **negative battery terminal nut (6 N.m)**.

Headlight assembly: Exploded view

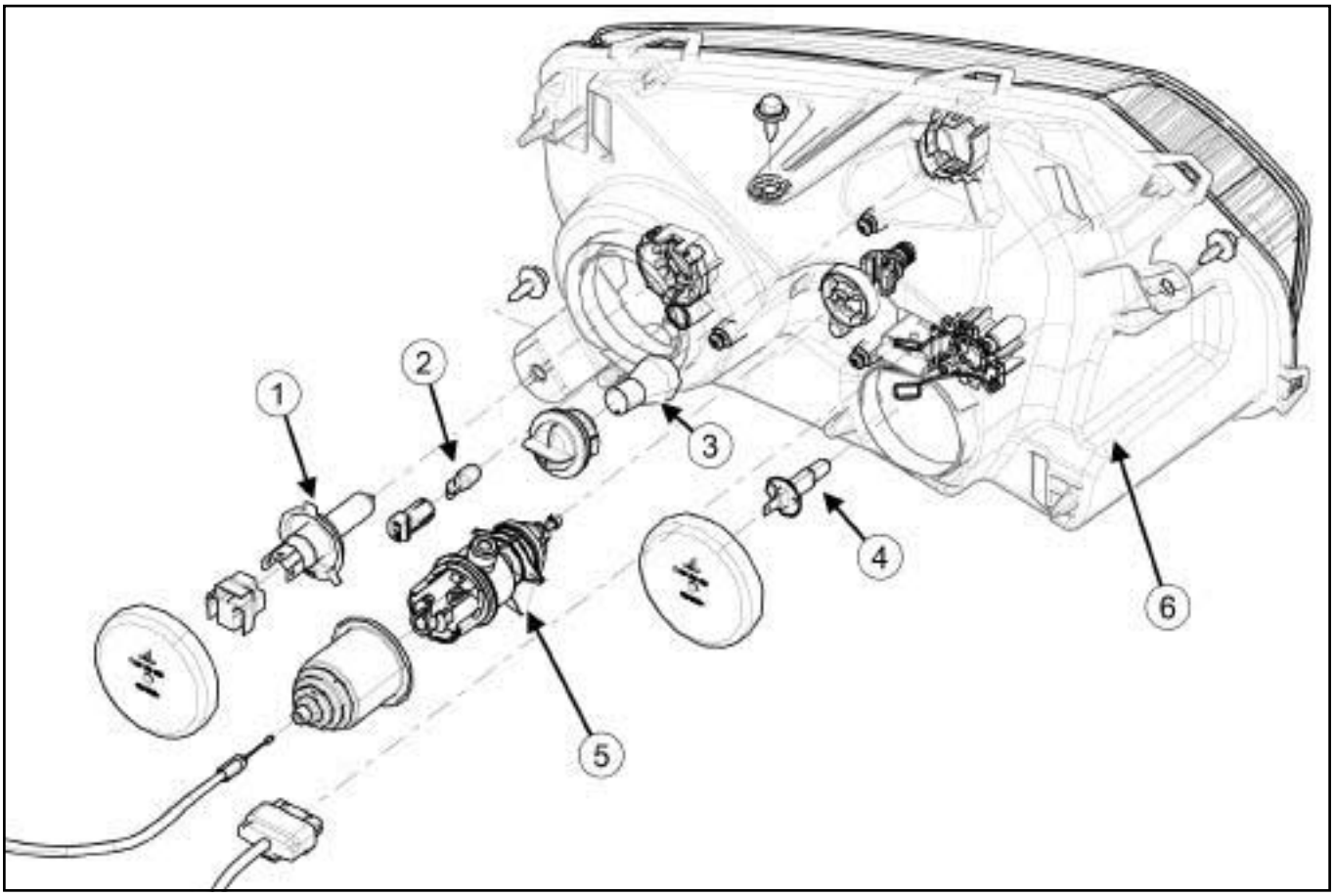

143999

1	Main beam headlight bulbs	(see **80B**, **Headlights**, **Headlight bulb: Removal - Refitting**, page **80B-5**)
2	Side light bulb	
3	Direction indicator bulb	
4	Dipped beam headlight bulb	
5	Headlight beam adjustment actuator	(see **80B**, **Headlights**, **Remote headlight beam adjustment actuator: Removal - Refitting**, page **80B-9**)
6	Headlight	(see **80B**, **Headlights**, **Headlight: Removal - Refitting**, page **80B-2**)

Location and specifications (tightening torques, parts always to be replaced, etc.) (see **80B**, **Headlights**, **Headlight assembly: Exploded view**, page **80B-1**)

REMOVAL

I - REMOVAL PREPARATION OPERATION

❏ Position the vehicle on a two-post lift (see **Vehicle: Towing and lifting**) (02A, Lifting equipment).

❏ Switch off the ignition.

❏ Remove the front bumper (see **Front bumper assembly: Exploded view**) (55A, Exterior protection).

II - REMOVAL OPERATION

❏ Disconnect the headlight connector.

❏ Remove (see **80B**, **Headlights**, **Headlight assembly: Exploded view**, page **80B-1**) :

- the headlight beam adjustment actuator,
- the headlight.

When replacing the headlight

❏ Remove the headlight bulbs (see **80B**, **Headlights**, **Headlight assembly: Exploded view**, page **80B-1**) .

REFITTING

I - REFITTING PREPARATION OPERATION

When replacing the headlight

❏ Refit the headlight bulbs (see **80B**, **Headlights**, **Headlight assembly: Exploded view**, page **80B-1**)

II - REFITTING OPERATION

❏ Proceed in the reverse order to removal.

❏ Adjust the headlights (see **80B**, **Headlights**, **Headlight: Adjustment**, page **80B-3**) .

Equipment required
headlight adjustment and checking tool

ADJUSTMENT

I - PREPARATION OPERATION FOR CHECK

❏ Place the vehicle on a level horizontal working area.

❏ Do not apply the parking brake.

❏ Check and inflate the tyres (see) (35A, Wheels and tyres).

❏ Open the bonnet.

❏ Check:

- that the luggage compartment is empty,
- that the headlights are clean.

> Note:
>
> Do not get into the vehicle throughout the operation.

❏ Position the headlight beam adjustment control at 0.

❏ Switch on the dipped headlights.

II - TEST OPERATION

❏

> **WARNING**
>
> Consult the device's operating manual to avoid incorrect use.

❏ Place the **headlight adjustment and checking tool** adjusted to **-1%** in front of the vehicle.

❏ Using the **headlight adjustment and checking tool**, check the headlight beam adjustment.

III - ADJUSTMENT OPERATION

1 - Beam adjustment

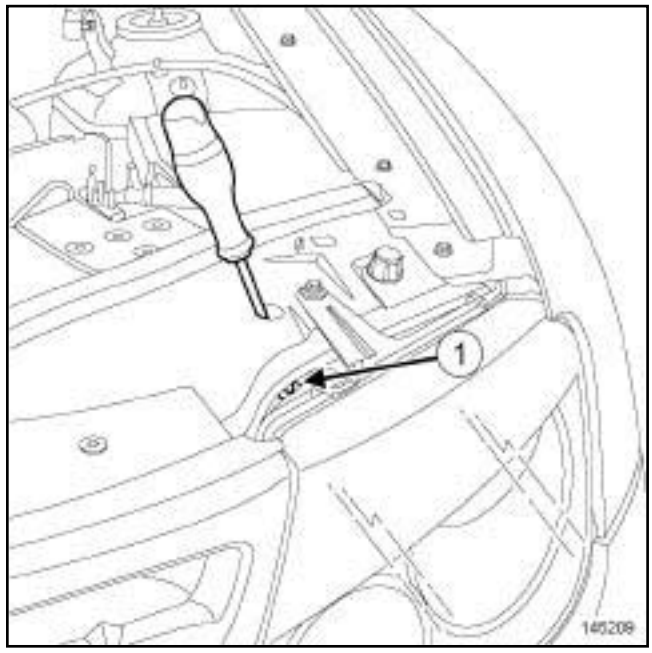

145209

❏ Use the **headlight adjustment and checking tool** to adjust the headlight beam by using the screw (**1**) .

2 - Horizontal adjustment

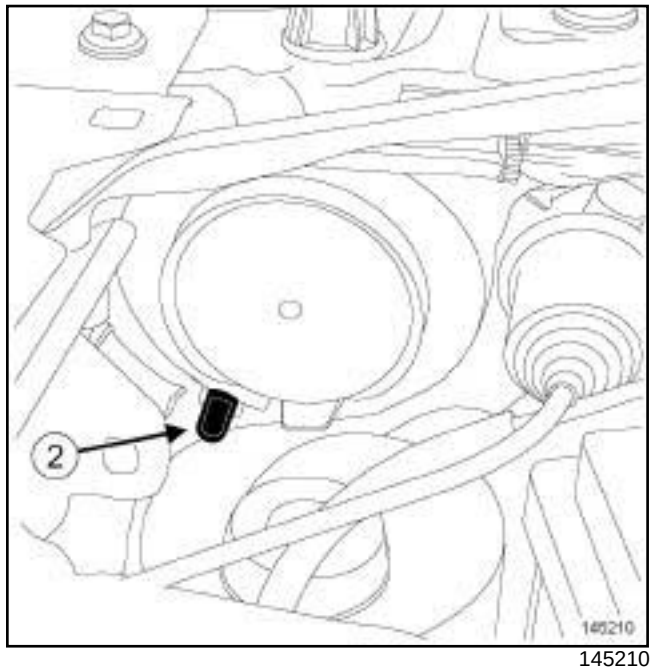

145210

❏ Use the **headlight adjustment and checking tool** to horizontally adjust the headlight by using the screw (**2**) .

IV - FINAL OPERATION

❑ Close the bonnet.

Location and specifications (tightening torques, parts always to be replaced, etc.) (see **80B**, **Headlights**, **Headlight assembly: Exploded view**, page **80B-1**)

Note:

The operation for removing - refitting the bulbs does not require the headlight to be removed.

REMOVAL

I - REMOVAL PREPARATION OPERATION

❑ Switch off the ignition.

II - REMOVAL OPERATION

❑ Remove the headlight bulbs (see **80B**, **Headlights**, **Headlight assembly: Exploded view**, page **80B-1**) .

REFITTING

I - REFITTING PREPARATION OPERATION

❑

WARNING

To prevent any breakages, handle the bulb by its base. If you should touch the glass, clean it with alcohol and a lint-free cloth.

II - REFITTING OPERATION

❑ Proceed in the reverse order to removal.

REMOVAL

I - REMOVAL PREPARATION OPERATION

❑ Position the vehicle on a two-post lift (see **Vehicle: Towing and lifting**) (02A, Lifting equipment).

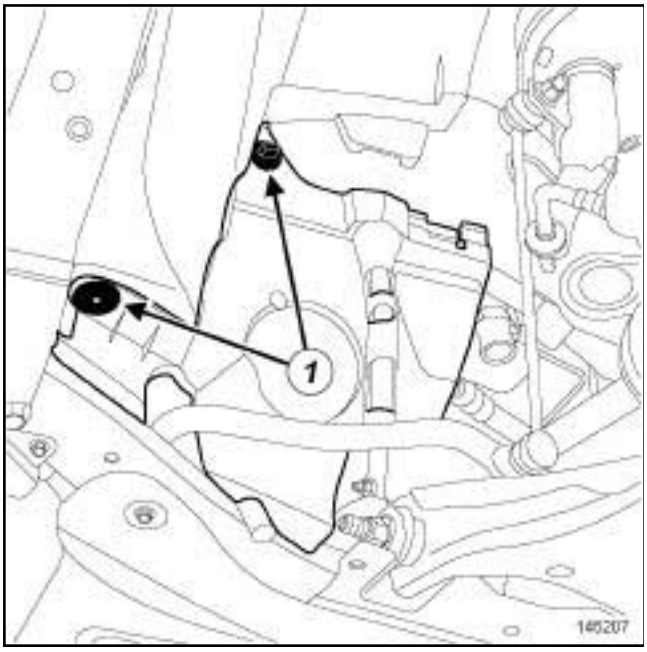

145207

❑ Remove:

- the clips (**1**) ,
- the front wheel arch side liner.

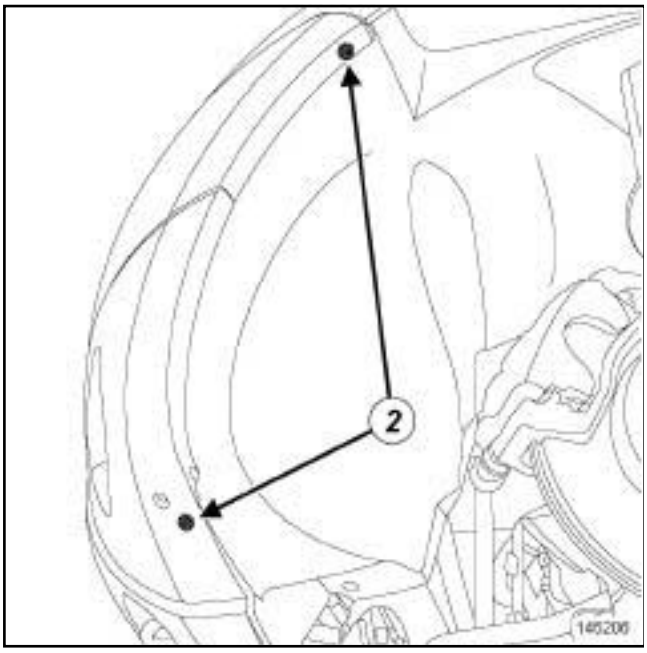

145206

❑ Remove the bolts (**2**) .

❑ Move aside the front wheel arch liner.

II - REMOVAL OPERATION

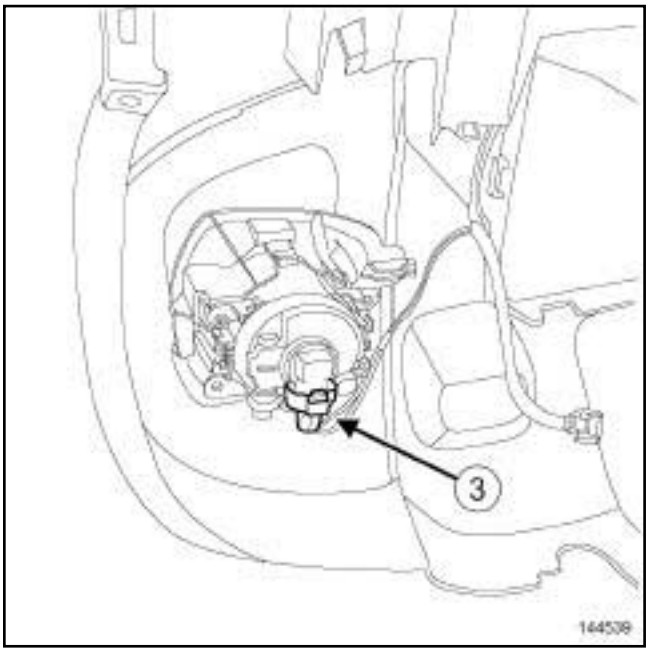

144539

❑ Disconnect the front fog light connector (**3**) .

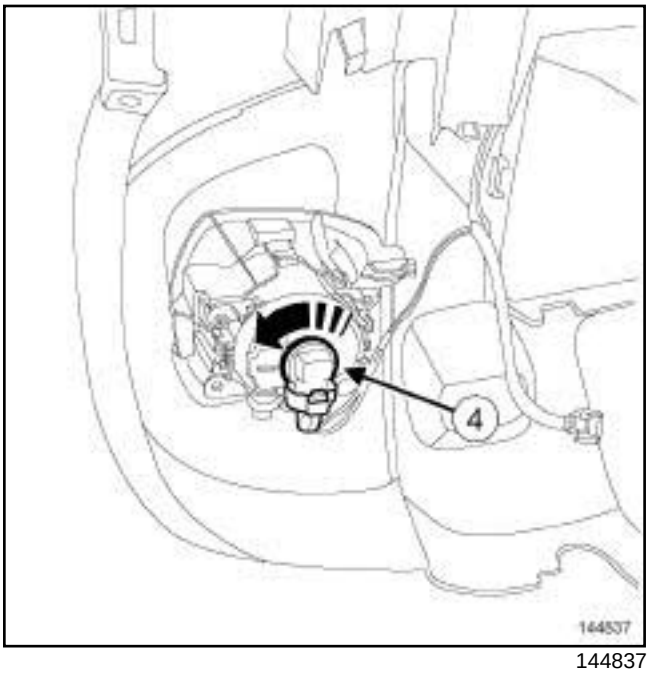

144837

❑ Remove the front fog light bulb anticlockwise.

REFITTING

❑

> Note:
>
> When replacing a bulb, only use approved bulbs.

❑ Proceed in the reverse order to removal.

REMOVAL

I - REMOVAL PREPARATION OPERATION

❏ Position the vehicle on a two-post lift (see **Vehicle: Towing and lifting**) (02A, Lifting equipment).

❏ Remove the front bumper (see **Front bumper assembly: Exploded view**) (55A, Exterior protection).

II - REMOVAL OPERATION

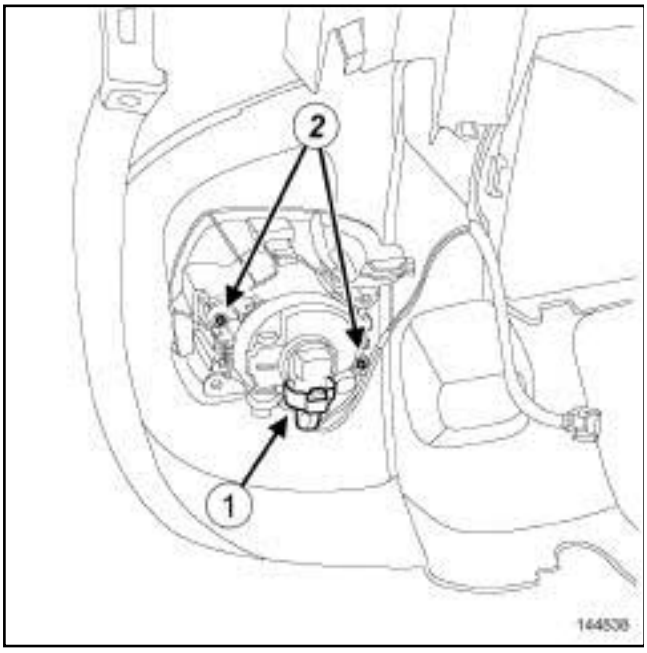

144838

❏ Disconnect the front fog light connector (**1**) .

❏ Remove:

- the bolts (**2**) from the front fog light,
- the front fog light.

When replacing the front fog light

❏ Remove the front fog light bulb (see **80B**, **Headlights**, **Front fog light bulb: Removal - Refitting**, page **80B-6**) .

REFITTING

REFITTING OPERATION

When replacing the front fog light

❏ Refit the front fog light bulb (see **80B**, **Headlights**, **Front fog light bulb: Removal - Refitting**, page **80B-6**) .

❏ Proceed in the reverse order to removal.

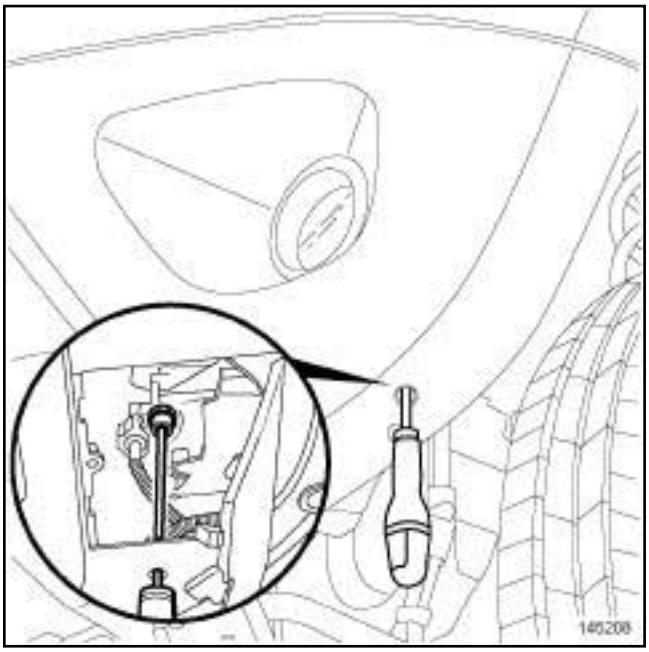

145208

❏ Adjust the front fog lights using a screwdriver.

Special tooling required	
Car. 1363	Set of trim removal levers.

REMOVAL

OPERATION FOR REMOVAL OF PART CONCERNED

❑ Unclip the side indicator using the **(Car. 1363)**.

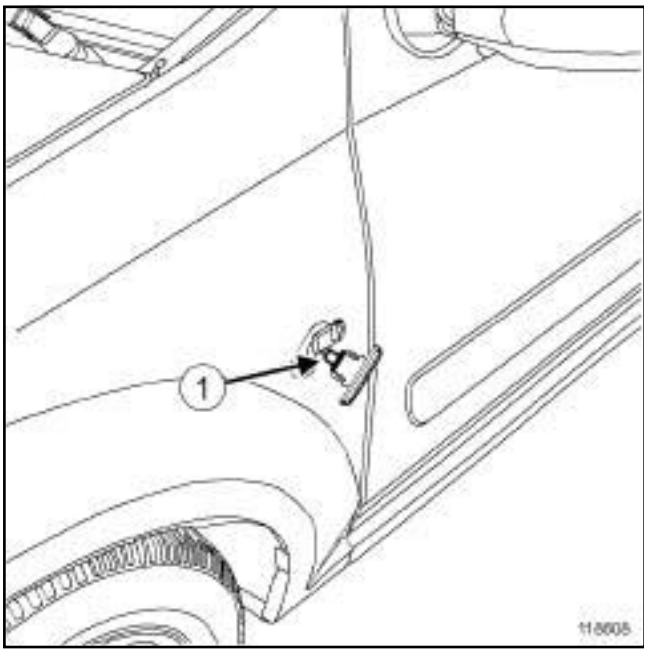

118608

❑ Disconnect the bulb holder connector (**1**) by turning it a quarter of a turn anti-clockwise.

REFITTING

REFITTING OPERATION FOR PART CONCERNED

❑ Connect the bulb holder connector by turning it a quarter of a turn clockwise.

❑ Clip on the side indicator.

Location and specifications (tightening torques, parts always to be replaced, etc.) (see **80B**, **Headlights**, **Headlight assembly: Exploded view**, page **80B-1**)

REMOVAL

I - REMOVAL PREPARATION OPERATION

❏ Position the vehicle on a two-post lift (see **Vehicle: Towing and lifting**) (02A, Lifting equipment).

❏ Switch off the ignition.

❏ Remove:

- the front bumper (see **Front bumper assembly: Exploded view**) and (see **Exterior body front trim assembly: Exploded view**) (55A, Exterior protection),
- the headlight (see **80B**, **Headlights**, **Headlight assembly: Exploded view**, page **80B-1**)

II - REMOVAL OPERATION

❏ Remove the headlight beam adjustment actuator by turning it a quarter of a turn clockwise (see **80B**, **Headlights**, **Headlight assembly: Exploded view**, page **80B-1**) .

REFITTING

REFITTING OPERATION

❏ Proceed in the reverse order to removal.

❏ Adjust the headlights (see **80B**, **Headlights**, **Headlight: Adjustment**, page **80B-3**) .

Rear light assembly: Exploded view

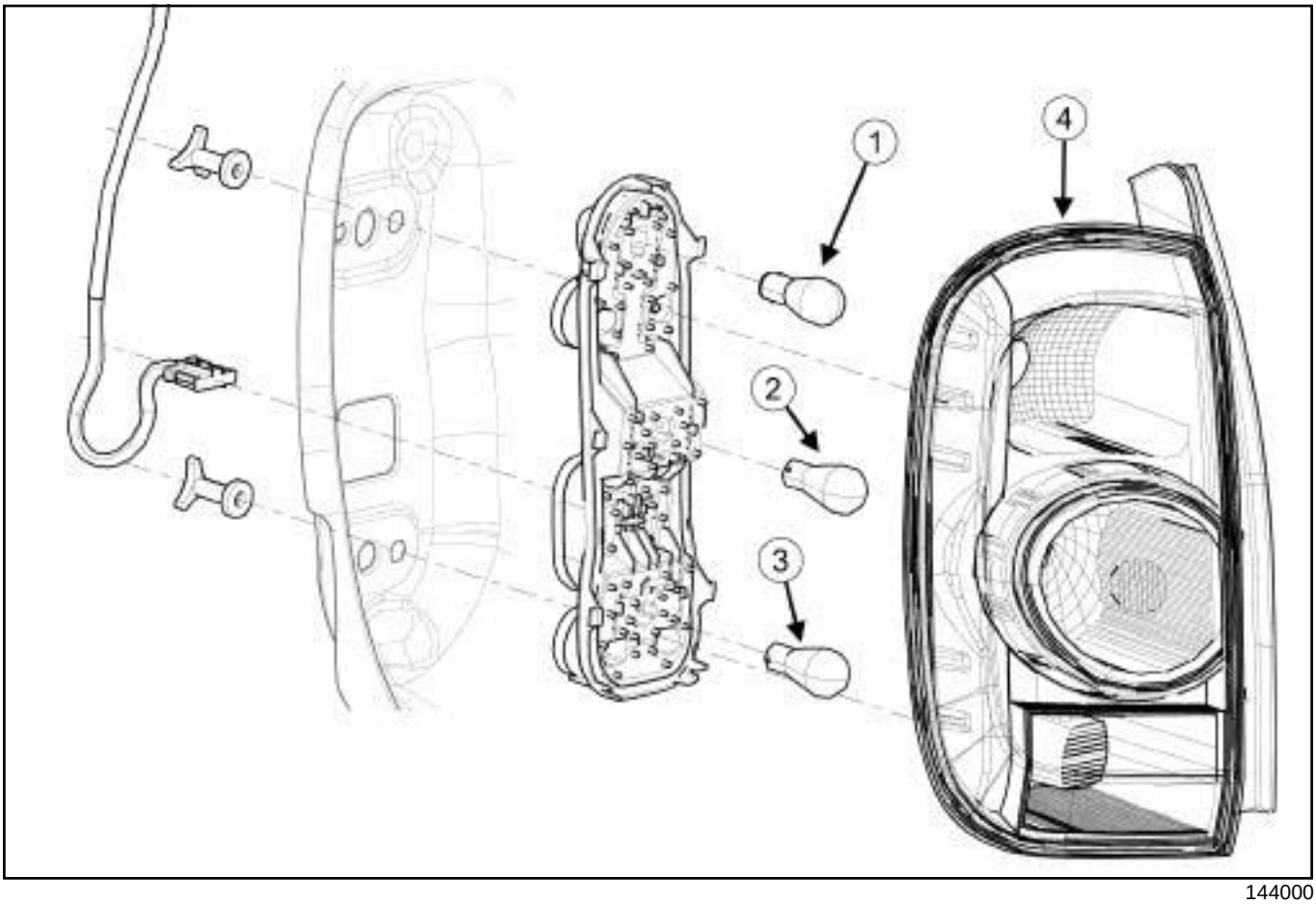

144000

1	Brake light and side light bulb	(see **81A**, **Rear lighting**, **Rear light bulb: Removal - Refitting**, page **81A-3**)
2	Direction indicator bulb	
3	Fog or reversing light bulb	
4	Rear light	(see **81A**, **Rear lighting**, **Rear wing light: Removal - Refitting**, page **81A-2**)

Location and specifications (tightening torques, parts always to be replaced, etc.) (see **81A**, **Rear lighting**, **Rear light assembly: Exploded view**, page **81A-1**)

REMOVAL

I - REMOVAL PREPARATION OPERATION

❏ Switch off the ignition.

Rear light on the wing (right-hand side)

❏ Remove

- the jack cover,
- the jack.

II - REMOVAL OPERATION

❏ Remove (see **81A**, **Rear lighting**, **Rear light assembly: Exploded view**, page **81A-1**) :

- the nuts of the rear light on the wing,
- the rear light on the wing.

❏ Disconnect the connector from the rear light on the wing (see **81A**, **Rear lighting**, **Rear light assembly: Exploded view**, page **81A-1**) .

When replacing the rear light on the wing

❏ Remove the bulbs from the rear light on the wing (see **81A**, **Rear lighting**, **Rear light assembly: Exploded view**, page **81A-1**) .

REFITTING

❏ Proceed in the reverse order to removal.

REMOVAL

I - REMOVAL PREPARATION OPERATION

❏ Switch off the ignition.

❏ Remove the rear light on the wing (see **81A**, **Rear lighting**, **Rear light assembly: Exploded view**, page **81A-1**) .

II - REMOVAL OPERATION

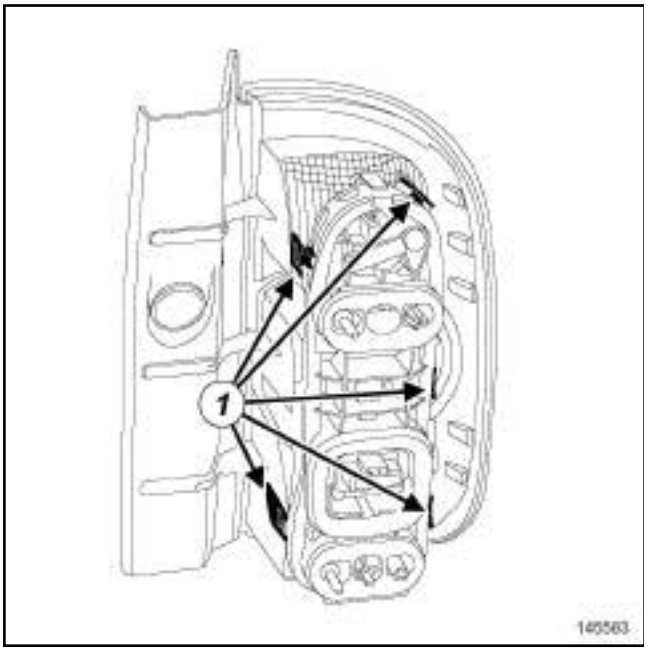

145583

❏ Unclip the bulb holder by pressing on the clips (**1**) .

1 - Brake light and side light bulb

❏ Remove the brake light and side light bulb (see **81A**, **Rear lighting**, **Rear light assembly: Exploded view**, page **81A-1**) .

2 - Direction indicator bulb

❏ Remove the direction indicator bulb (see **81A**, **Rear lighting**, **Rear light assembly: Exploded view**, page **81A-1**) .

3 - Fog or reversing light bulb

❏ Remove the fog or reversing light bulb (see **81A**, **Rear lighting**, **Rear light assembly: Exploded view**, page **81A-1**) .

REFITTING

❏ Proceed in the reverse order to removal.

REMOVAL

OPERATION FOR REMOVAL OF PART CONCERNED

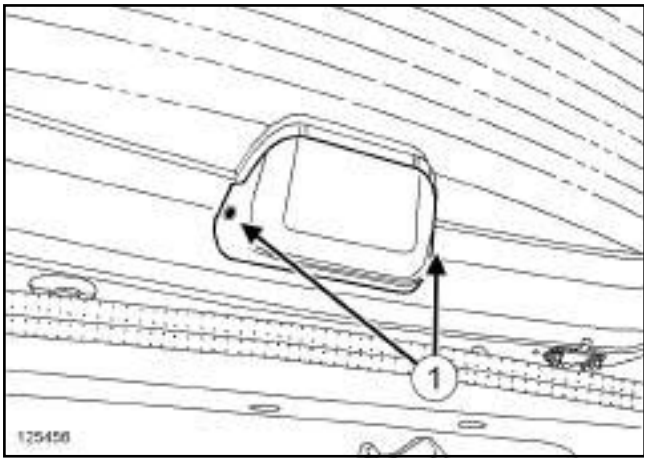

125456

❏ Unclip the high level brake light cover by pressing at (**1**) .

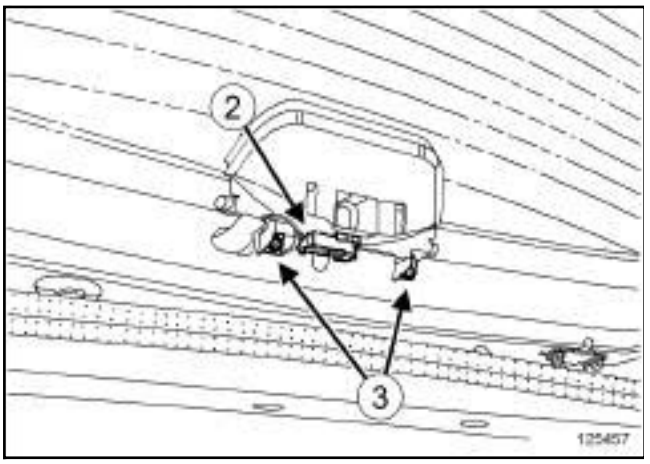

125457

❏ Disconnect the high level brake light connector (**2**) .

❏ Remove:

- the high level brake light screws (**3**) ,
- the high level brake light ,
- the high level brake light bulb (see **81A**, **Rear lighting**, **High level brake light bulb: Removal - Refitting**, page **81A-5**) .

REFITTING

REFITTING OPERATION FOR PART CONCERNED

❏ Refit:

- the high level brake light bulb (see **81A**, **Rear lighting**, **High level brake light bulb: Removal - Refitting**, page **81A-5**) ,
- the high level brake light ,
- the high level brake light screws.

❏ Connect the high level brake light connector.

❏ Clip on the high level brake light cover.

REMOVAL

I - REMOVAL PREPARATION OPERATION

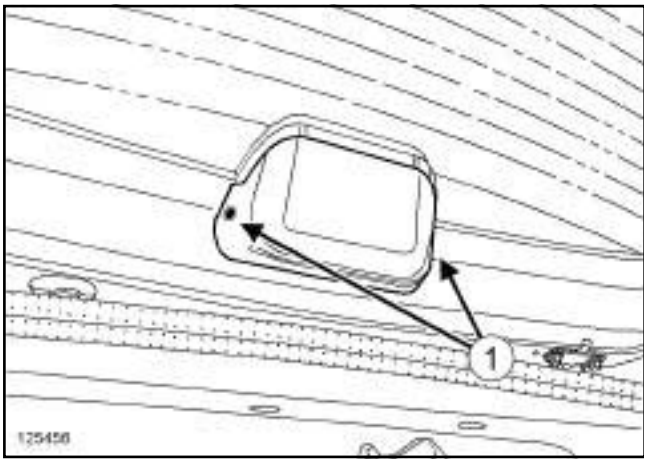

125456

- ❑ Unclip the high level brake light cover by pressing at (**1**) .
- ❑ Disconnect the high level brake light connector.

II - OPERATION FOR REMOVAL OF PART CONCERNED

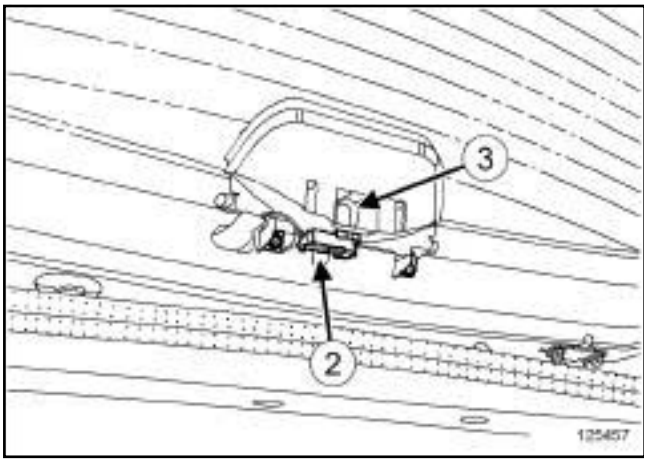

125457

- ❑ Remove:
  - the bulb holder (**2**) by turning it clockwise,
  - the high level brake light bulb (**3**) .

REFITTING

I - REFITTING OPERATION FOR PART CONCERNED

- ❑ Refit:
  - the high level brake light bulb,
  - the bulb holder by turning it anti-clockwise.

II - FINAL OPERATION.

- ❑ Connect the high level brake light connector.
- ❑ Clip on the high level brake light cover.

REMOVAL

I - REMOVAL PREPARATION OPERATION

❏ Switch off the ignition.

II - OPERATION FOR REMOVAL OF PART CONCERNED

❏ Unclip the number plate light using a small flat-blade screwdriver.

❏ Disconnect the connector for the number plate lights.

❏ Remove the number plate light.

REFITTING

REFITTING OPERATION FOR PART CONCERNED

❏ Connect the connector for the number plate lights.

❏ Clip on the number plate light.

I - LIST OF COMPONENTS

No.	Description
(1)	UCH
(2)	Passenger compartment fuse box
(3)	Front courtesy light
(4), (5)	Rear courtesy light
(6)	Storage compartment light
(7), (8), (9), (10)	Luggage compartment light
(11), (12)	Door switch
(13), (14), (15)	Luggage compartment switch

II - LOCATION OF COMPONENTS

1 - UCH

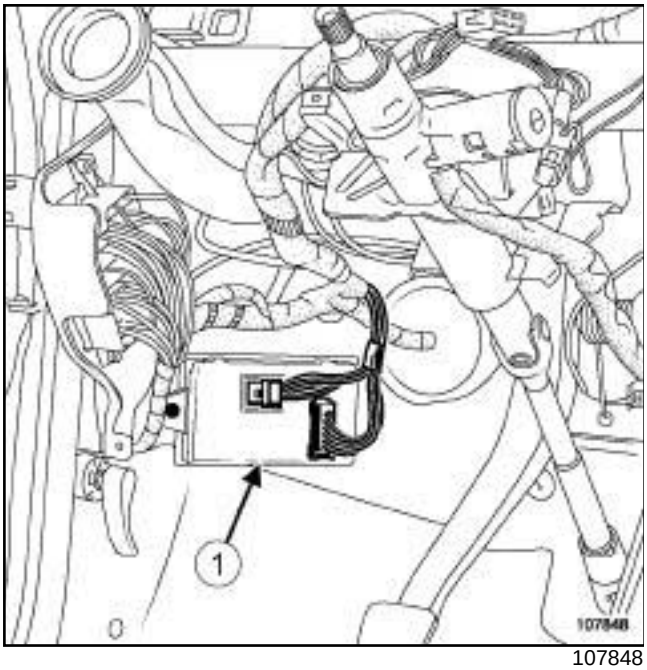

107848

UCH (**1**)

2 - PASSENGER COMPARTMENT FUSE BOX

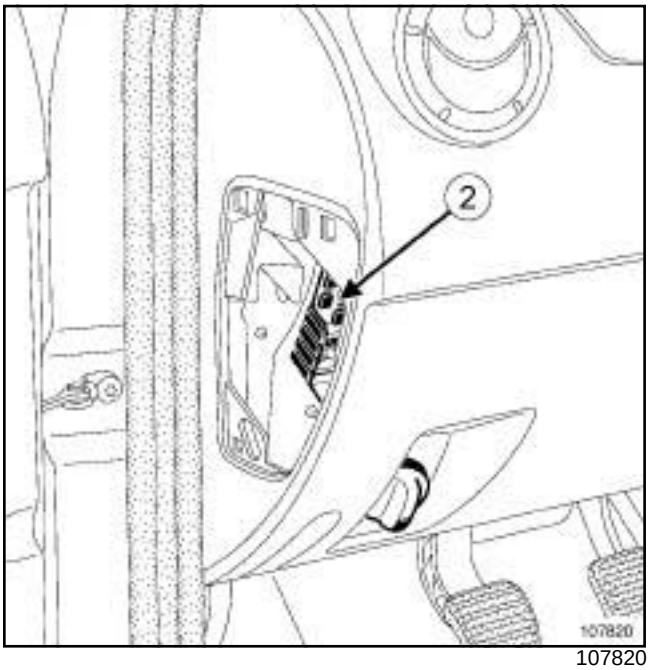

107820

Passenger compartment fuse box (**2**)

3 - FRONT COURTESY LIGHT

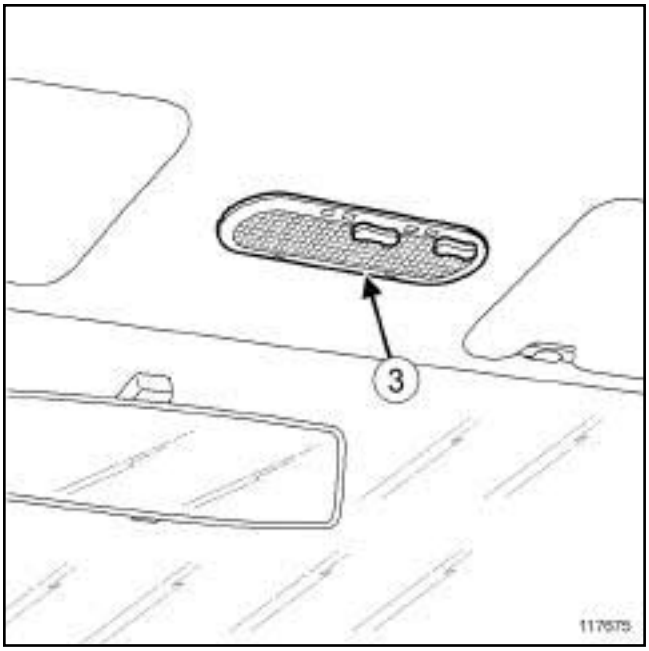

117675

Front courtesy light (**3**)

4 - STORAGE COMPARTMENT LIGHT

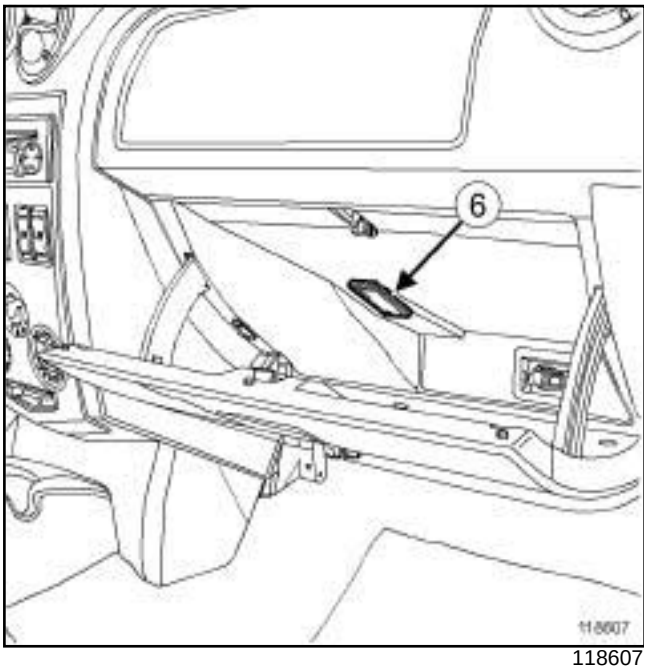

118607

Storage compartment light (**6**)

5 - LUGGAGE COMPARTMENT LIGHT

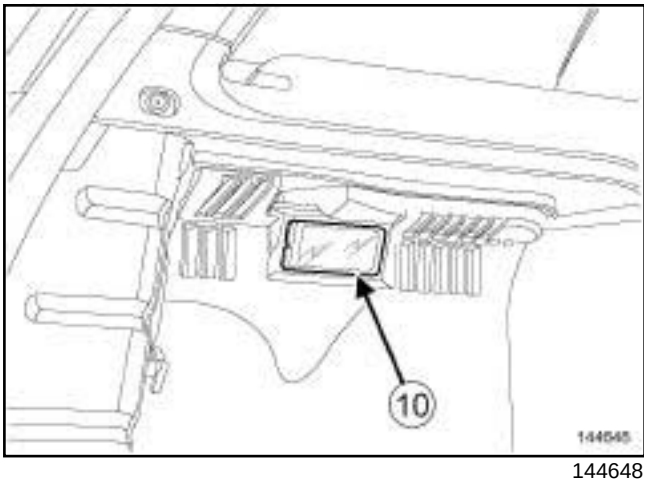

144648

Luggage compartment light (**10**)

6 - DOOR SWITCH

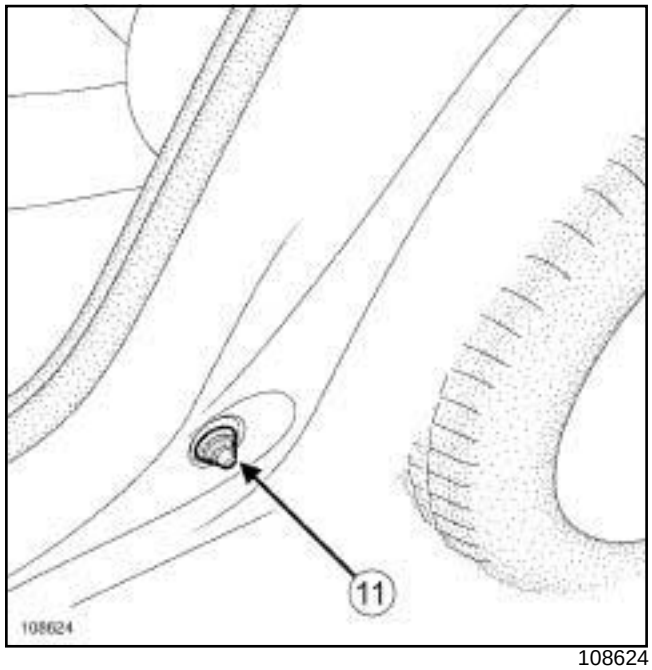

108624

Side door switch (**11**)

7 - LUGGAGE COMPARTMENT SWITCH

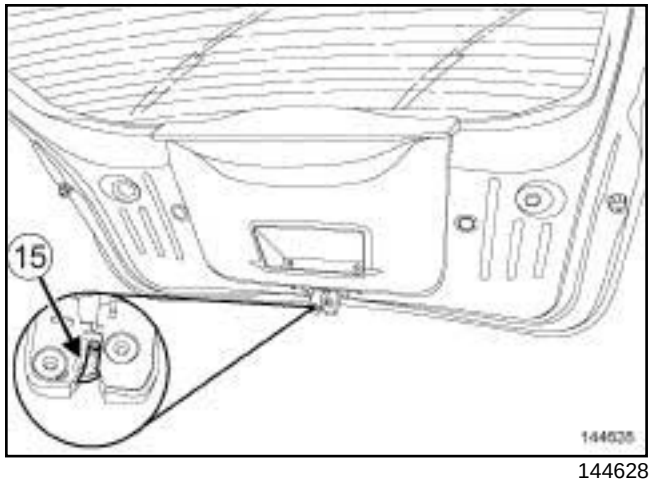

144628

Luggage compartment switch (**15**)

Special tooling required	
Car. 1363	Set of trim removal levers.

REMOVAL

OPERATION FOR REMOVAL OF PART CONCERNED

Front courtesy light

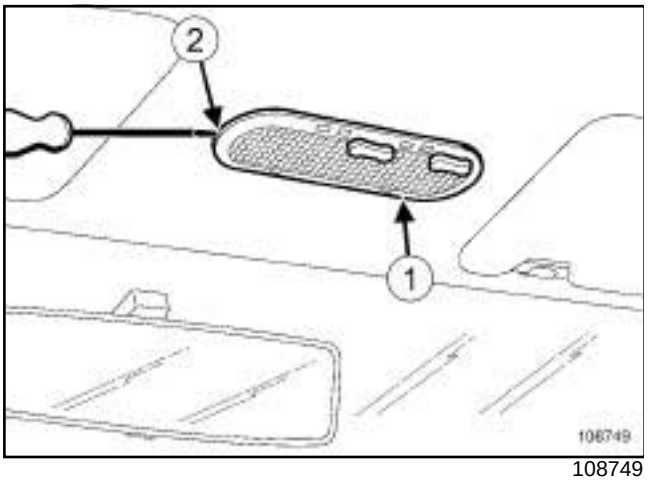

108749

❏ Unclip the translucent cover (**1**) using a flat-blade screwdriver or tool **(Car. 1363)**, inserting it into the notch (**2**) .

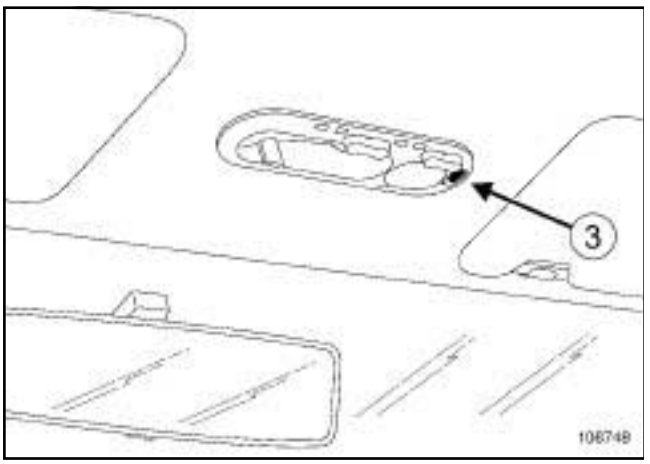

108748

❏ Press on the clip (**3**) using the tool **(Car. 1363)** to remove the courtesy light.

❏ Disconnect the connector.

REFITTING

REFITTING OPERATION FOR PART CONCERNED

❏ Connect the connector.

❏ Refit the courtesy light.

❏ Clip the translucent cover in place.

REMOVAL

OPERATION FOR REMOVAL OF PART CONCERNED

Side door switch

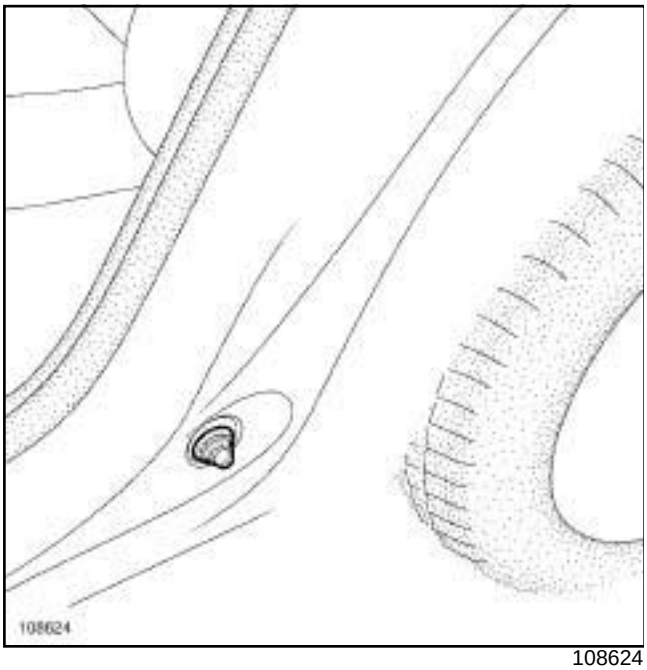

108624

❑ Remove the sealing gaiter.

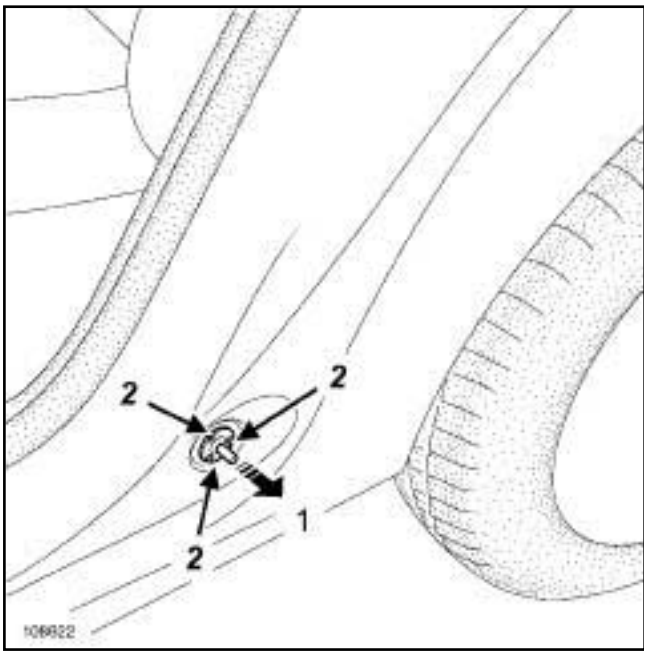

108622

❑ Remove the switch (**1**) by squeezing the three clips (**2**) .

❑ Disconnect the connector.

REFITTING

REFITTING OPERATION FOR PART CONCERNED

Side door switch

❑ Connect the connector.

❑ Clip the switch.

❑ Refit the sealing gaiter.

Special tooling required	
Car. 1363	Set of trim removal levers.

REMOVAL

OPERATION FOR REMOVAL OF PART CONCERNED

❑

> Note:
>
> It is not necessary to remove the dashboard.

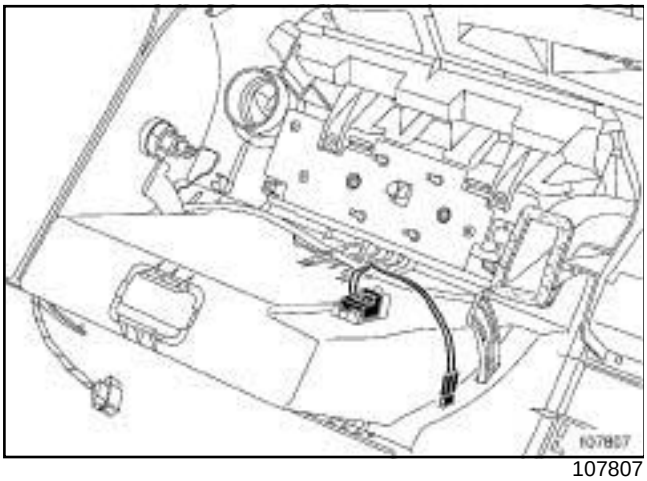

107807

❑ Unclip the storage compartment light using the **(Car. 1363)**.

❑ Disconnect the storage compartment light connector.

> Note:
>
> The glove compartment light switch can also be removed.

❑ Unclip the storage compartment light connector.

❑ Disconnect the storage compartment light switch connector.

REFITTING

OPERATION FOR REFITTING PART CONCERNED

❑

> Note:
>
> When replacing a bulb, use an approved **C5W** bulb.

❑ Connect the storage compartment light switch connector.

❑ Clip the storage compartment light connector.

❑ Connect the storage compartment light connector.

❑ Clip on the storage compartment light.

Special tooling required	
Car. 1363	Set of trim removal levers.

REMOVAL

REMOVAL OPERATION

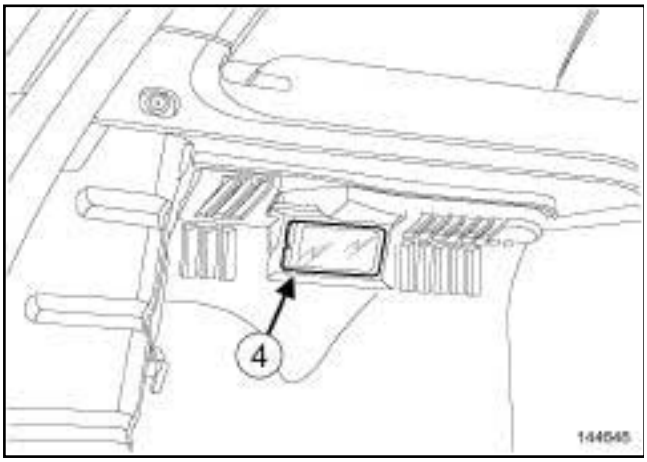

144648

- ❑ Unclip the luggage compartment light (**4**) using tool **(Car. 1363)**.
- ❑ Disconnect the luggage compartment light connector.

REFITTING

REFITTING OPERATION

- ❑ Connect the luggage compartment light connector.
- ❑ Clip the luggage compartment light in place.

I - LIST OF COMPONENTS

No.	Description
(1)	Passenger compartment fuse box
(2),(3)	Engine compartment fuse and relay box

II - LOCATION OF COMPONENTS

1 - PASSENGER COMPARTMENT FUSE BOX

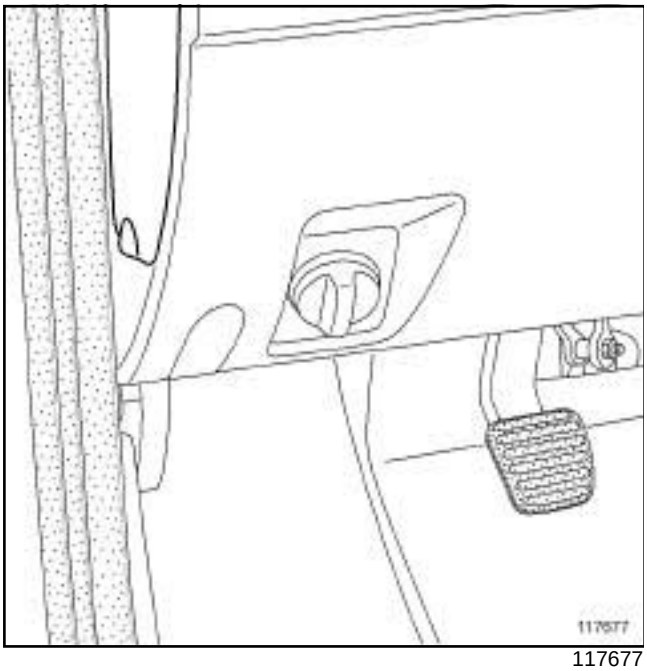

117677

This unit is located in the passenger compartment, on the left-hand side of the dashboard.

Remove the cover to access the passenger compartment fuse box.

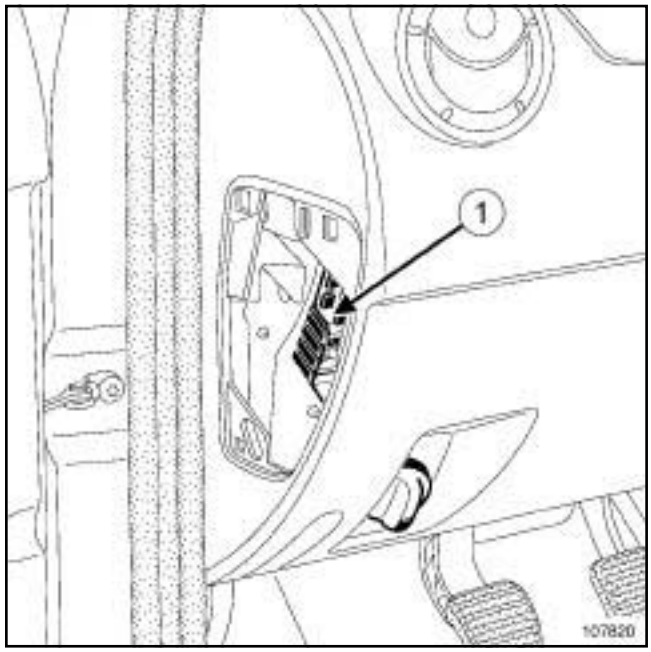

107820

Passenger compartment fuse box (**1**)

2 - ENGINE COMPARTMENT FUSE AND RELAY BOX

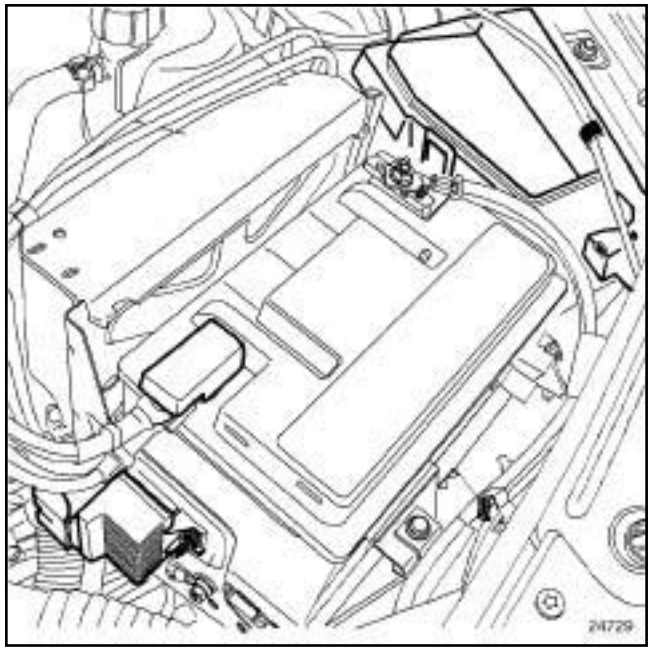

24729

Unclip the cover to access the passenger compartment fuse and relay box.

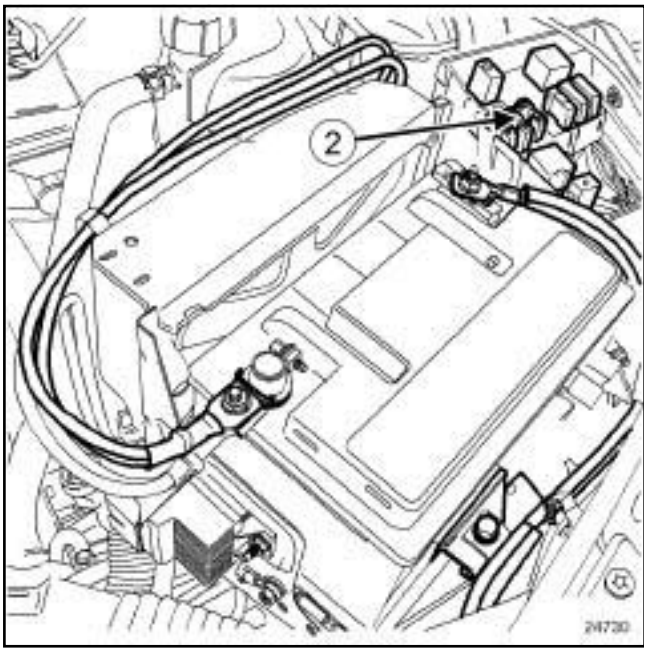

24730

Engine compartment fuse and relay box

3 - OLD ENGINE COMPARTMENT FUSE AND RELAY BOX

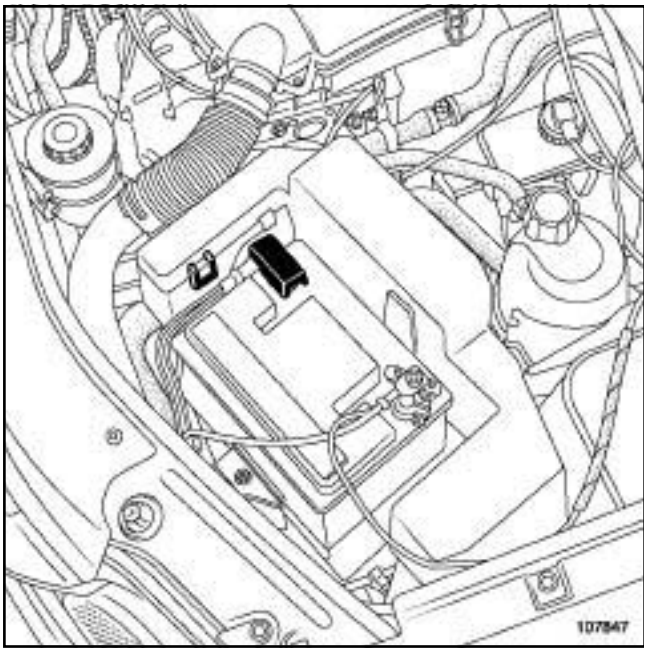

107847

Unclip the cover to gain access to the unit.

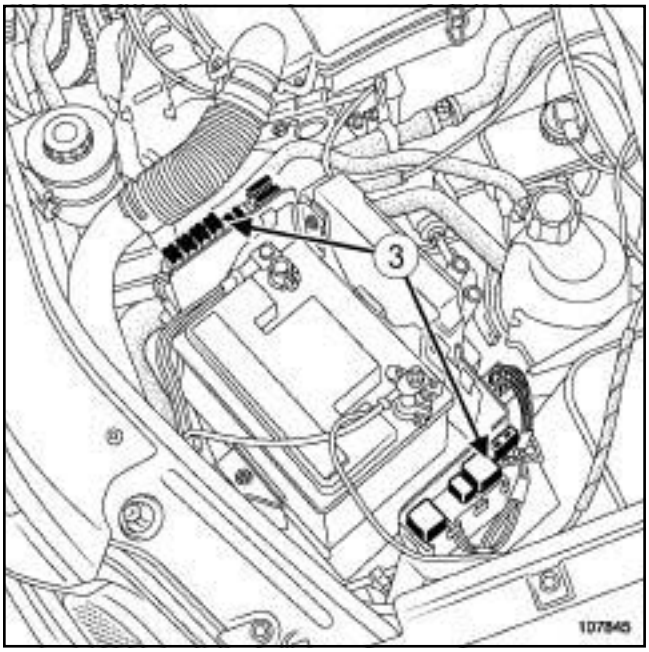

107845

Engine compartment fuse and relay box (**3**)

I - LIST OF COMPONENTS

No.	Description
(1)	Antenna/Transponder ring
(2)	Ignition switch
(3)	UCH
(4)	Ignition key

II - LOCATION OF COMPONENTS

1 - ANTENNA/TRANSPONDER RING

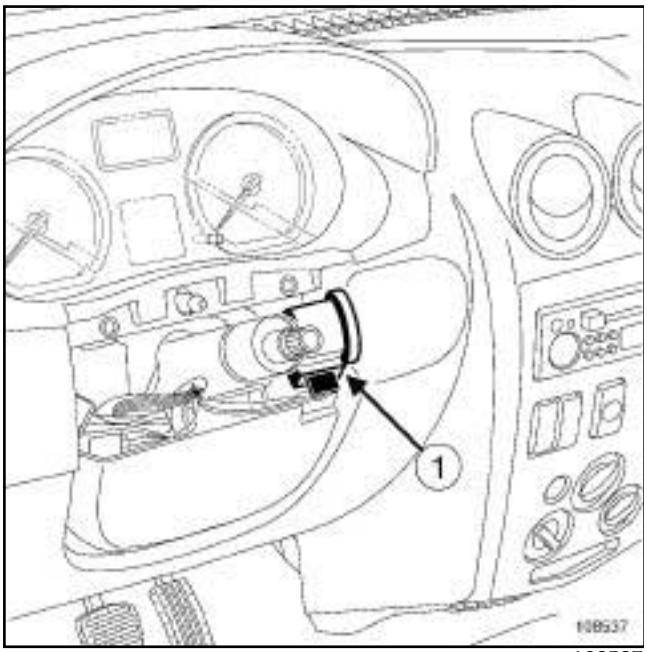

108537

Antenna/transponder ring (**1**)

2 - IGNITION SWITCH

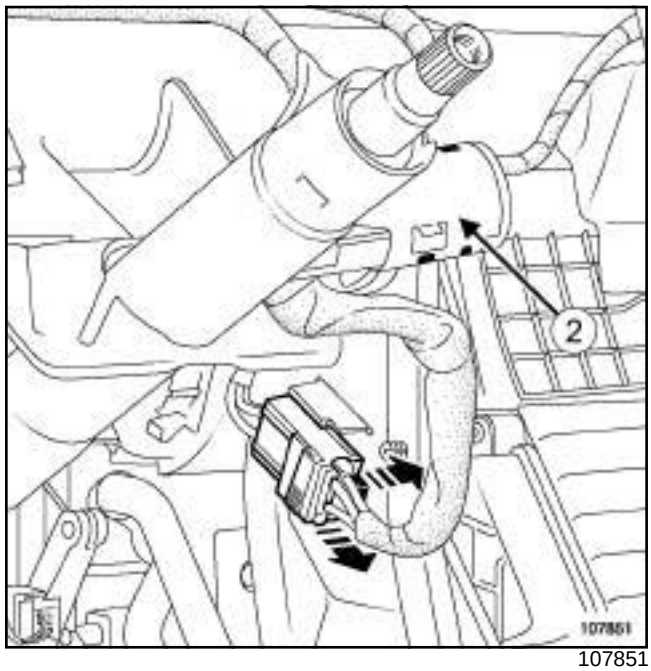

107851

Ignition switch (**2**)

3 - UCH

107848

UCH (**3**)

4 - IGNITION KEY

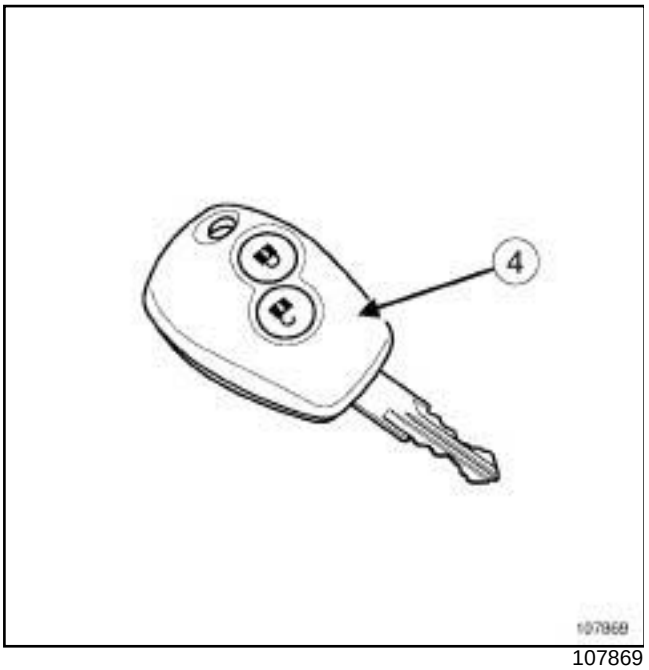

107869

Ignition key (**4**)

REMOVAL

I - REMOVAL PREPARATION OPERATION

❏ Disconnect the battery (see **80A**, **Battery**, **Battery: Removal - Refitting**, page **80A-2**) .

❏ Remove the transponder ring (see **82A**, **Engine immobiliser**, **Transponder ring: Removal - Refitting**, page **82A-5**) .

II - OPERATION FOR REMOVAL OF PART CONCERNED

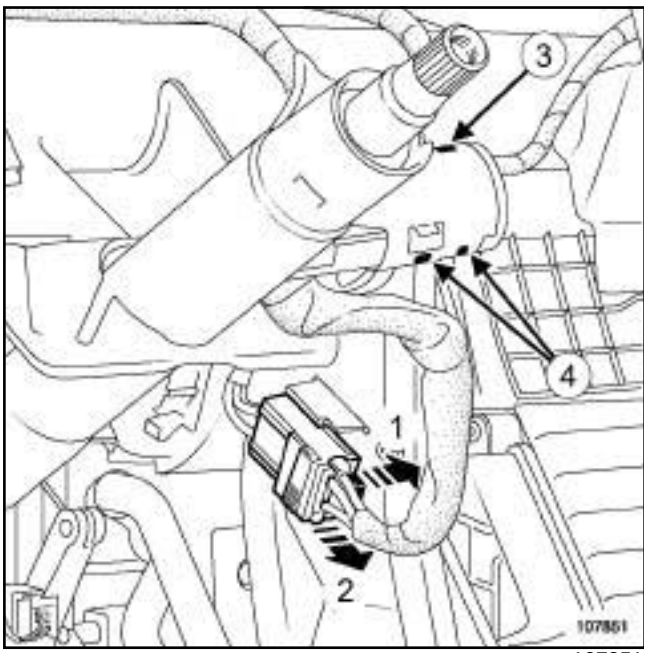

107851

❏ Unclip the connector from its support at (**1**) and (**2**) from underneath the dashboard.

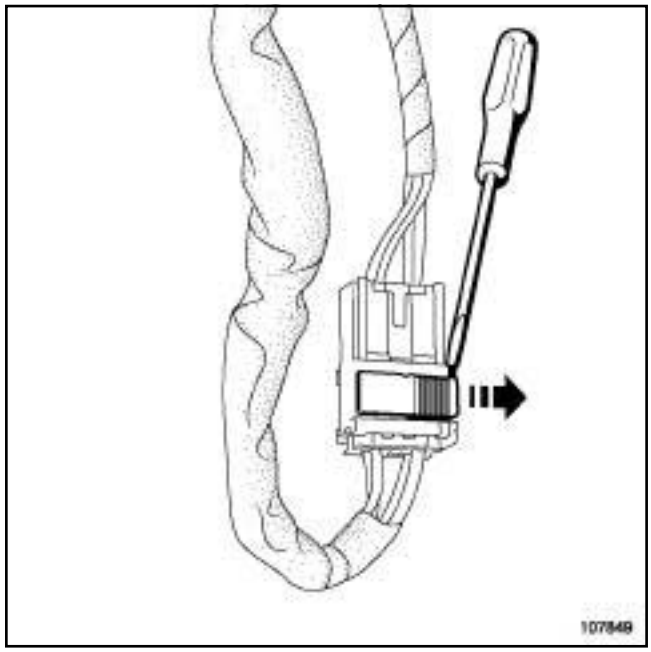

107849

❏ Unclip the connector using a flat-blade screwdriver.

❏ Remove the bolt ***(3)*** .

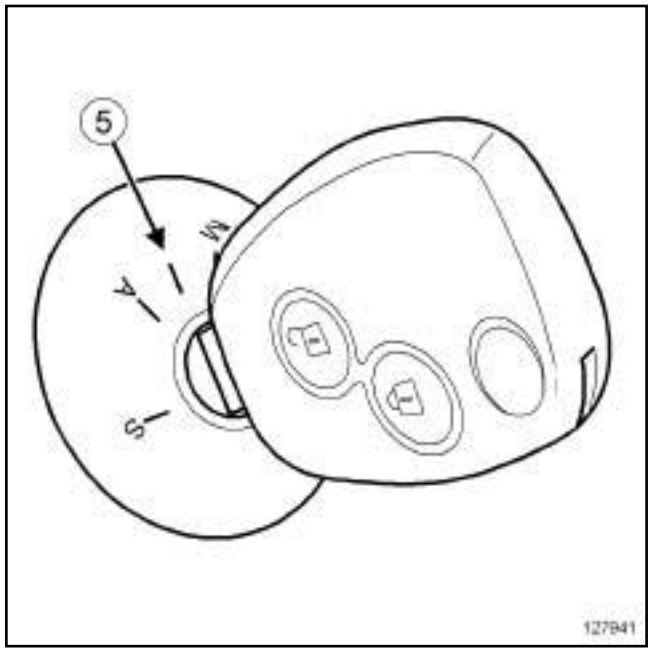

127941

❏ Move the ignition key to position (**5**) .

❏ Tilt the retaining lugs ***(4)*** .

❏ Remove switch.

REFITTING

I - REFITTING PREPARATION OPERATION

❏ Always replace the switch bolt.

❏ Check that the ignition key is in position ***(5)*** .

II - REFITTING OPERATION FOR PART CONCERNED

❏ Refit:

- the switch,
- the switch bolt.

❏ Clip:

- the connector to the switch,
- the connector for the switch on its mounting.

III - FINAL OPERATION.

❏ Refit the transponder ring (see **82A**, **Engine immobiliser**, **Transponder ring: Removal - Refitting**, page **82A-5**) .

❏ Connect the battery (see **80A**, **Battery**, **Battery: Removal - Refitting**, page **80A-2**) .

REMOVAL

I - REMOVAL PREPARATION OPERATION

❏ Switch off the ignition.

> Note:
>
> The steering wheel does not need to be removed.

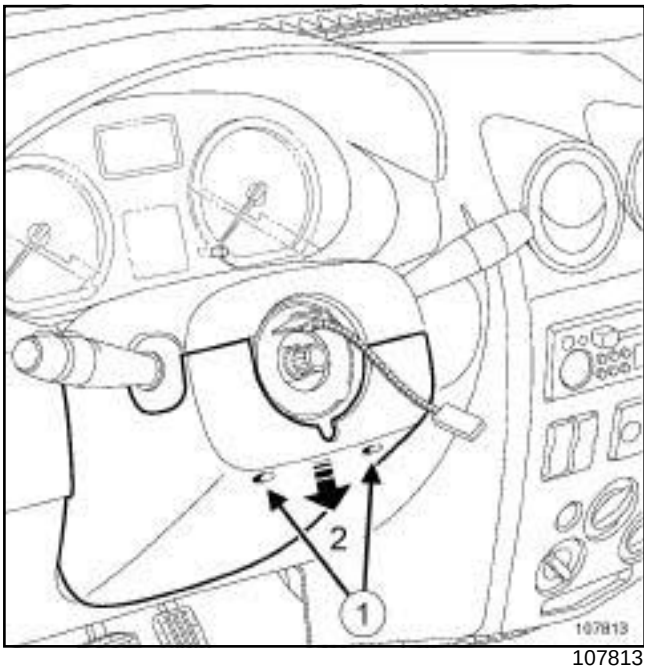

107813

❏ Remove:

- both bolts (**1**) ,
- the lower half-shell at (**2**) .

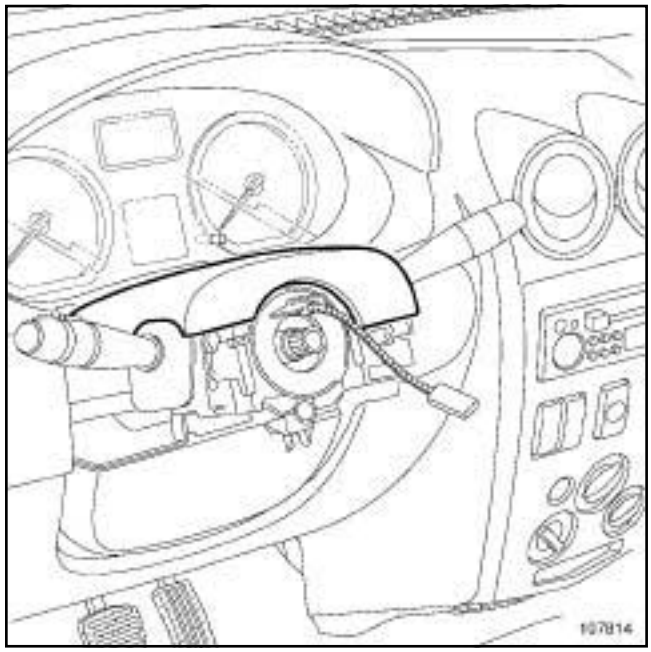

107814

❏ Remove the upper half cowling.

II - OPERATION FOR REMOVAL OF PART CONCERNED

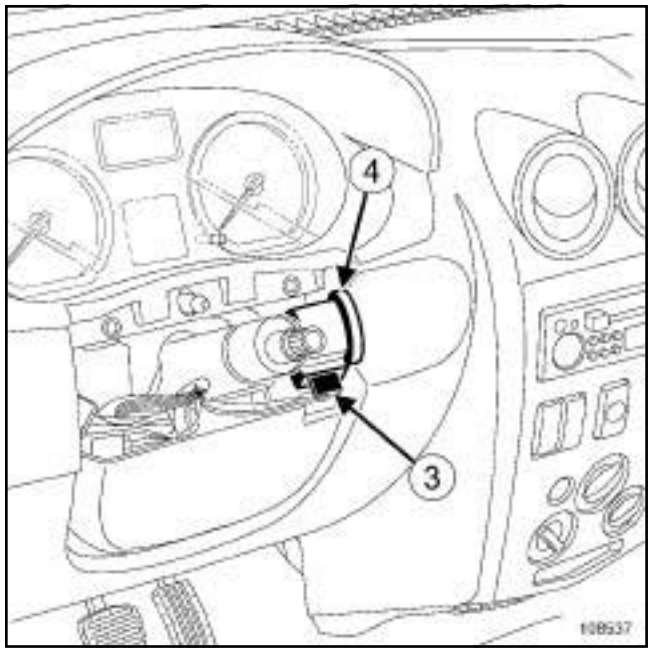

108537

❏ Disconnect the connector (**3**) from the transponder ring (**4**) .

❏ Remove the transponder ring.

REFITTING

I - REFITTING OPERATION FOR PART CONCERNED

❏ Refit the transponder ring.

❏ Connect the transponder ring connector.

II - FINAL OPERATION.

❏ Refit:

- the upper half-shell,
- the lower half-shell,
- the two lower half-shell bolts.

REMOVAL

OPERATION FOR REMOVAL OF PART CONCERNED

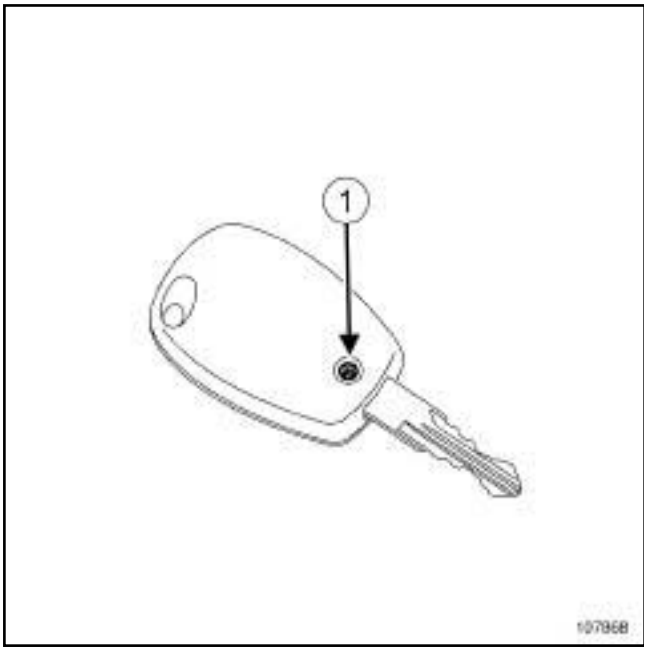

107868

❑ Remove the bolt (**1**) .

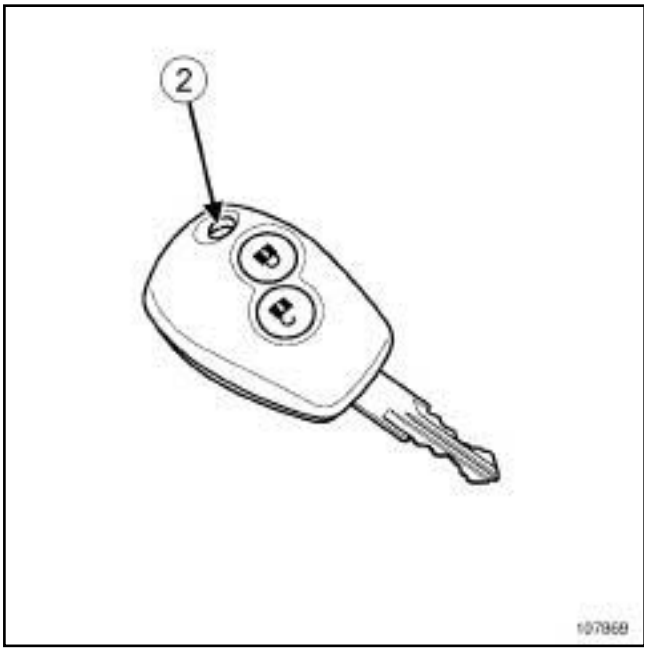

107869

❑ Open the key with a flat-blade screwdriver at (**2**) .

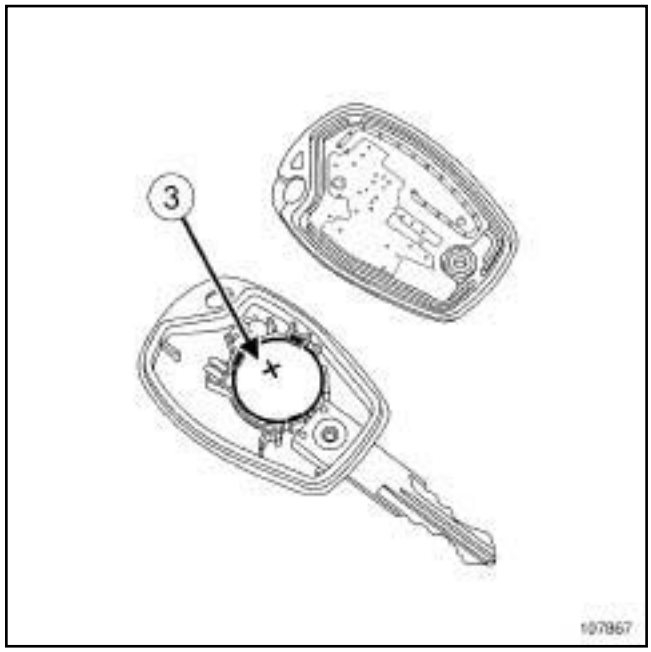

107867

❑ Remove the battery (**3**) using a flat-blade screwdriver.

REFITTING

I - REFITTING PREPARATION OPERATION

❑

> **WARNING**
>
> To ensure that the remote control operates correctly, take care not to damage the battery contacts.
>
> Only handle the new battery with dry, grease-free hands or wearing clean gloves to avoid any risk of dirt and oxidation on the battery.

II - REFITTING OPERATION FOR PART CONCERNED

❑ Fit the battery ***(3)*** respecting the polarity.

III - FINAL OPERATION.

❑ Close the key.

❑ Refit the bolt ***(1)*** .

❑ Tighten the bolt.

Tightening torques ▽	
horn bolt	**21 N.m**

REMOVAL

I - REMOVAL PREPARATION OPERATION

❏ Remove the front bumper (see **Front bumper assembly: Exploded view**) .

II - OPERATION FOR REMOVAL OF PART CONCERNED

1 - Monotonal horn

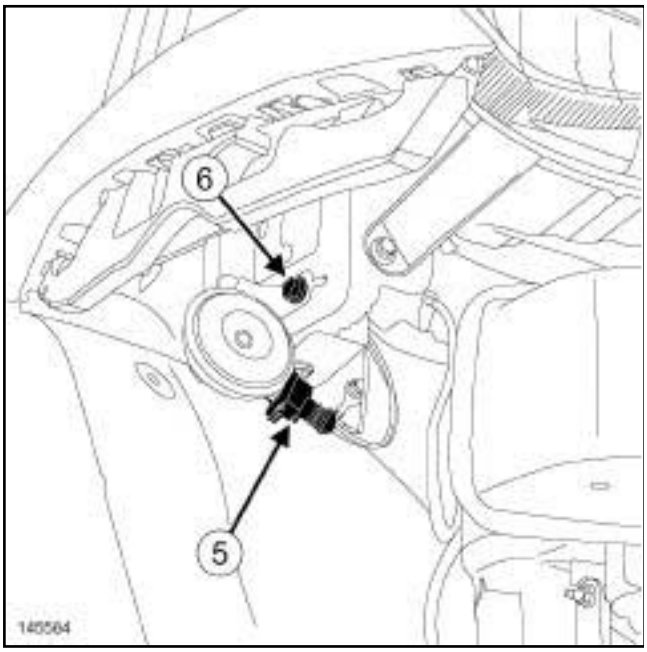

145584

❏ Disconnect the connector (**5**) .

❏ Remove:

- the bolt of the monotonal horn (**6**) ,
- the horn.

2 - Bitonal horn

❏

> Note:
>
> The bitonal horn is composed of two horns, which are fitted symmetrically on each side of the vehicle.

Left-hand side

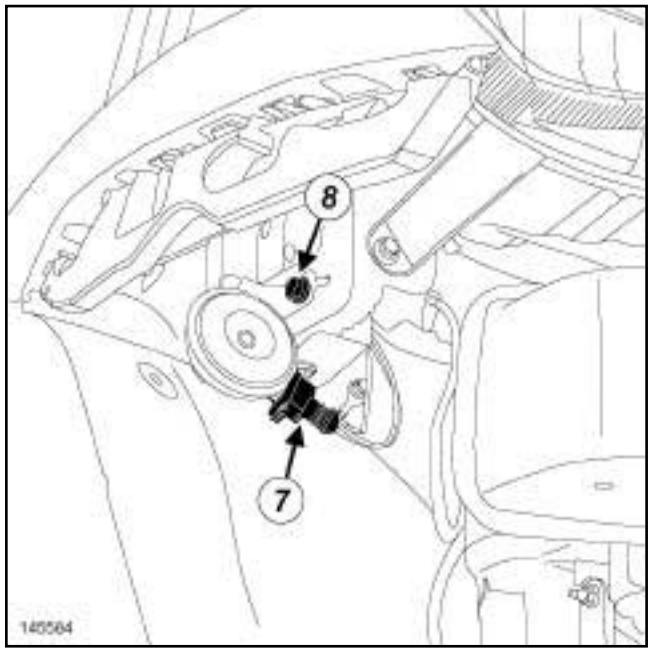

145584

Right-hand side

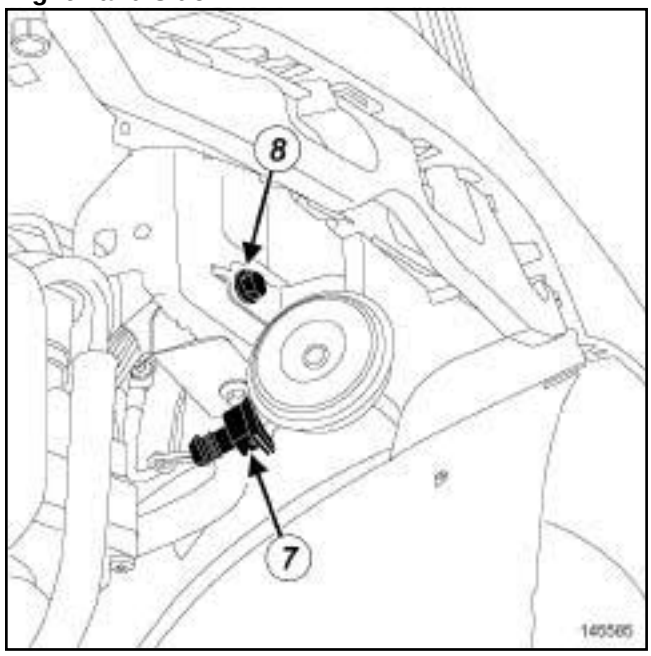

145585

❏ Disconnect the connector of the bitonal horn (**7**) .

❏ Remove:

- the bolt of the bitonal horn (**8**) ,
- the bitonal horn.

REFITTING

I - REFITTING OPERATION FOR PART CONCERNED

❏ Proceed in the reverse order to removal.

❏ Torque tighten the **horn bolt (21 N.m)**.

II - FINAL OPERATION

❏ Refit the front bumper.

When replacing the instrument panel, the following must be noted on the warranty booklet:

- that the instrument panel has been replaced,
- the mileage indicated by the instrument panel removed.

REMOVAL

I - REMOVAL PREPARATION OPERATION

❏ When replacing the instrument panel, read the mileage indicated on the instrument panel and note it in the warranty booklet (see insert in the introduction)

❏ Switch off the ignition.

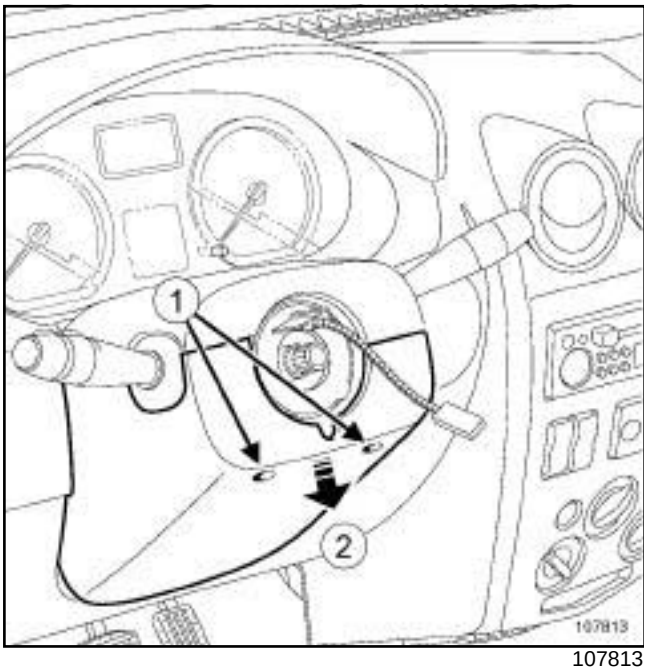

107813

❏ Remove the two lower bolts (**1**) .

❏ Unclip:

- the lower half-shell in the direction of the arrow (**2**) ,
- the upper half-shell.

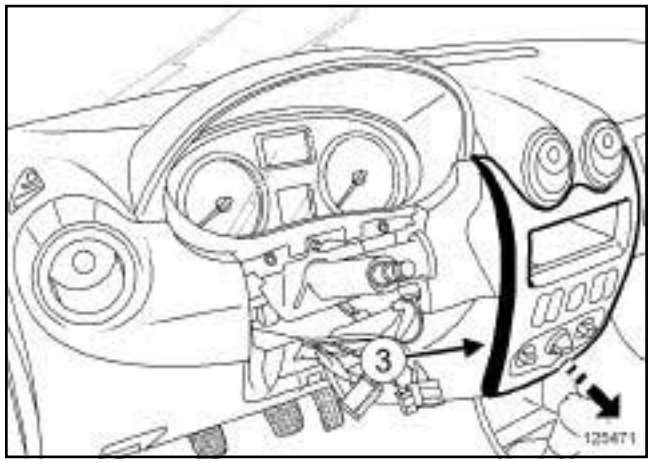

125471

❏ Unclip the central trim assembly (**3**) , starting at the bottom.

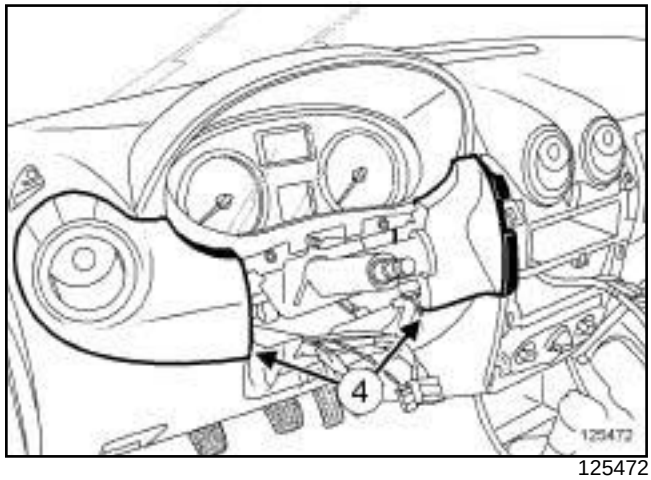

125472

❏ Unclip the trims (**4**) .

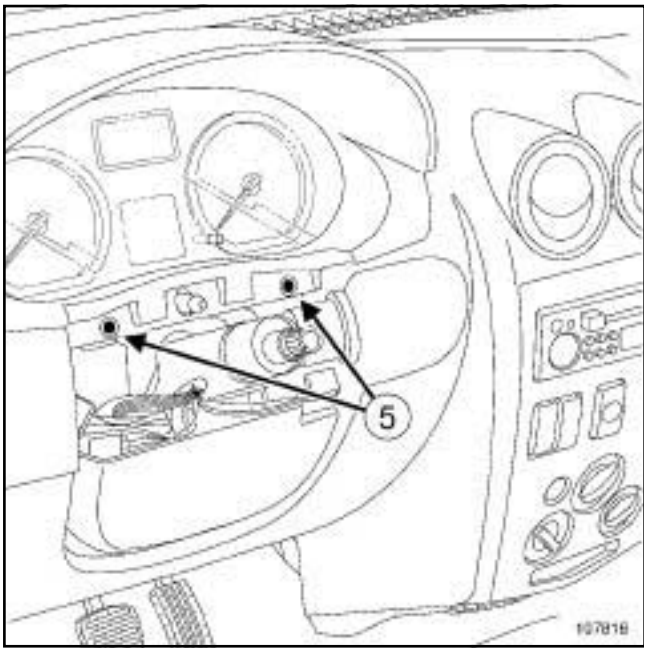

107816

❑ Remove the bolts (**5**) of the instrument panel frame.

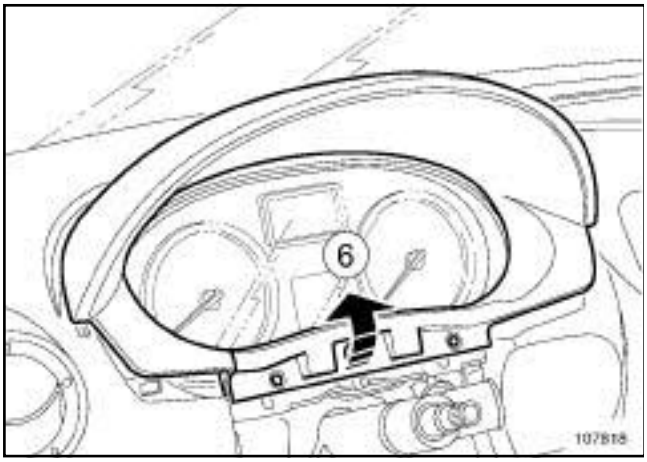

107818

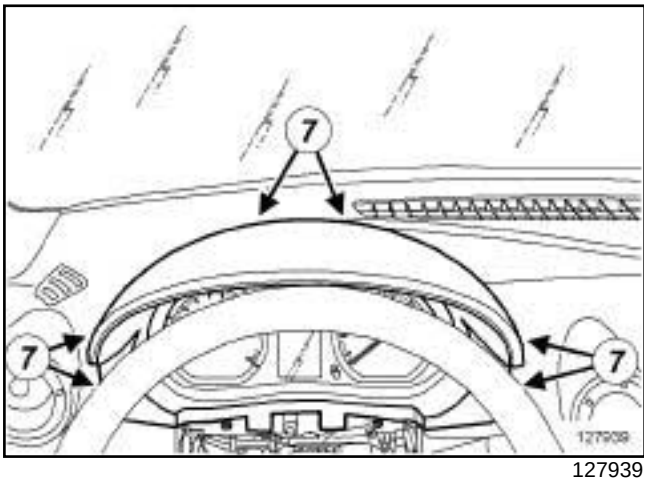

127939

❑ Unclip the instrument panel frame at (**6**) and (**7**) .

II - OPERATION FOR REMOVAL OF PART CONCERNED

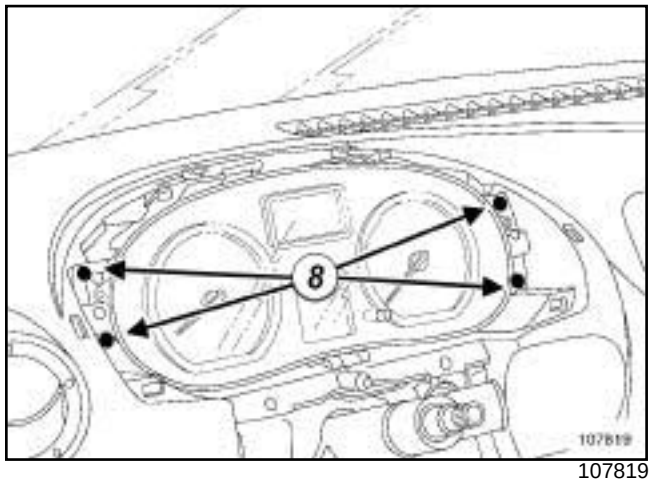

107819

❑ Remove the bolts (**8**) from the instrument panel.

❑ Unclip the instrument panel.

❑ Disconnect the connectors from the instrument panel.

REFITTING

I - REFITTING OPERATION FOR PART CONCERNED

❑ Connect the connectors to the instrument panel.

❑ Clip on the instrument panel.

❑ Refit the instrument panel bolts.

II - FINAL OPERATION

❑ Clip in place the instrument panel frame.

❑ Refit the bolts of the instrument panel frame.

❑ Clip on:

- the trims,
- the centre trim.

❑ Clip on:

- the upper half-shell,
- the lower half-shell.

❑ Refit the two lower bolts.

III - CHECKING AFTER REPAIR

❑ Switch on the ignition.

❑ Check the operation of the instrument panel.

❑ Set the time (see **Clock: Before/after repair procedure**) .

REMOVAL

I - REMOVAL PREPARATION OPERATION

❏ Set the wheels straight ahead.

❏ Lock the airbag computer (see **Fault finding - Replacement of components**) (88C, Airbags and pretensioners).

❏ Disconnect the battery (see **80A**, **Battery**, **Battery: Removal - Refitting**, page **80A-2**) .

❏ Remove the steering column switch assembly (see **84A**, **Control - Signals**, **Steering column switch assembly: Removal - Refitting**, page **84A-2**) .

II - OPERATION FOR REMOVAL OF PART CONCERNED

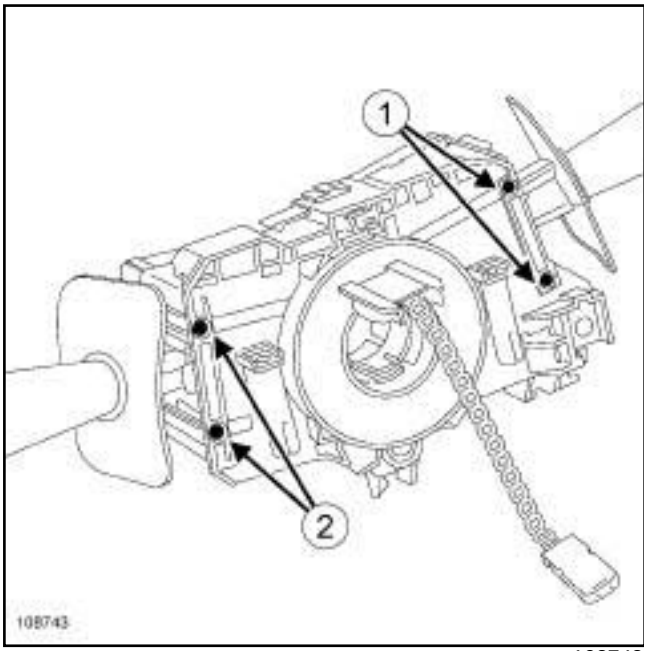

108743

❏ Remove:

- the bolts (**1**) from the wiper stalk,
- the bolts (**2**) from the lighting stalk.

REFITTING

I - REFITTING PREPARATION OPERATION

❏ Check that the rotary switch tape is correctly centred (**2.5 rotations** on each side).

> Note:
>
> If the rotary switch is being replaced, the new part is supplied ready centred with an adhesive label which will tear off when the wheel is turned for the first time (wheels must be straight when fitting).

❏ Ensure that the wheels are set straight ahead.

II - REFITTING OPERATION FOR PART CONCERNED

❏ Refit:

- the bolts to the lighting stalk,
- the bolts to the wiper stalk.

III - FINAL OPERATION

❏ Refit the steering column switch assembly (see **84A**, **Control - Signals**, **Steering column switch assembly: Removal - Refitting**, page **84A-2**) .

❏ Connect the battery (see **80A**, **Battery**, **Battery: Removal - Refitting**, page **80A-2**) .

❏ Unlock the airbag computer (see **Fault finding - Replacement of components**) (88C, Airbag and pretensioners).

IV - CHECKING AFTER REPAIR

❏ Switch on the ignition.

❏ Check the operation of the rotary switch:

- turn the steering wheel to the left until it stops,
- turn the steering wheel to the right until it stops,
- bring the steering wheel back to the central position,
- check that there are no faults on the instrument panel.

REMOVAL

I - REMOVAL PREPARATION OPERATION

❏ Set the wheels straight ahead.

❏ Lock the airbag computer (see **Fault finding - Replacement of components**) (88C, Airbags and pretensioners).

❏ Switch off the ignition.

❏ Disconnect the battery (see **80A**, **Battery**, **Battery: Removal - Refitting**, page **80A-2**) .

❏ Remove:

- the driver's frontal airbag (see **88C**, **Air bag and Pretensioners**, **Driver's frontal airbag: Removal - Refitting**, page **88C-6**) ,
- the steering wheel (see **Steering wheel: Removal - Refitting**) (36A, Steering).

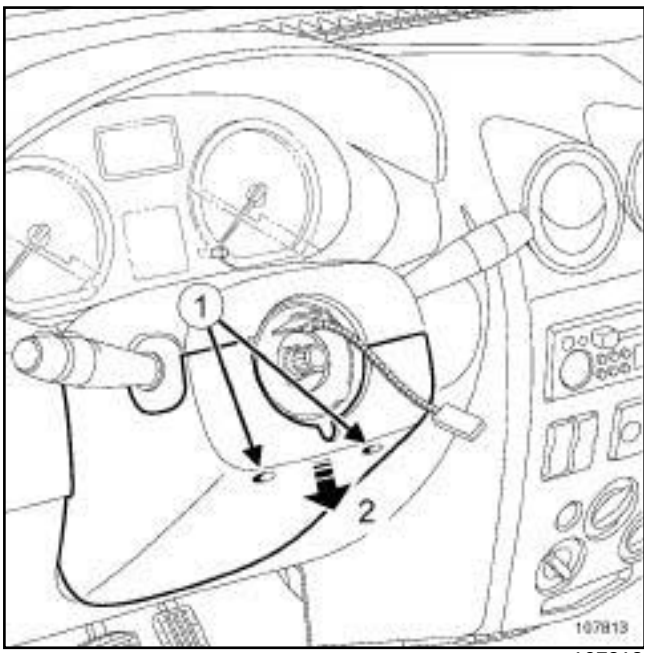

107813

❏ Remove the two lower bolts (**1**) .

❏ Unclip the lower half-shell in the direction of the arrow (**2**) .

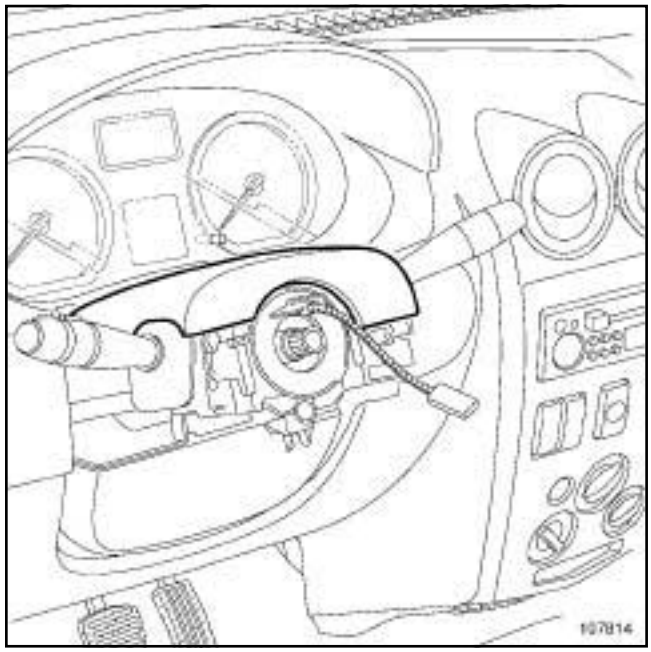

107814

❏ Unclip the upper half-shell.

II - OPERATION FOR REMOVAL OF PART CONCERNED

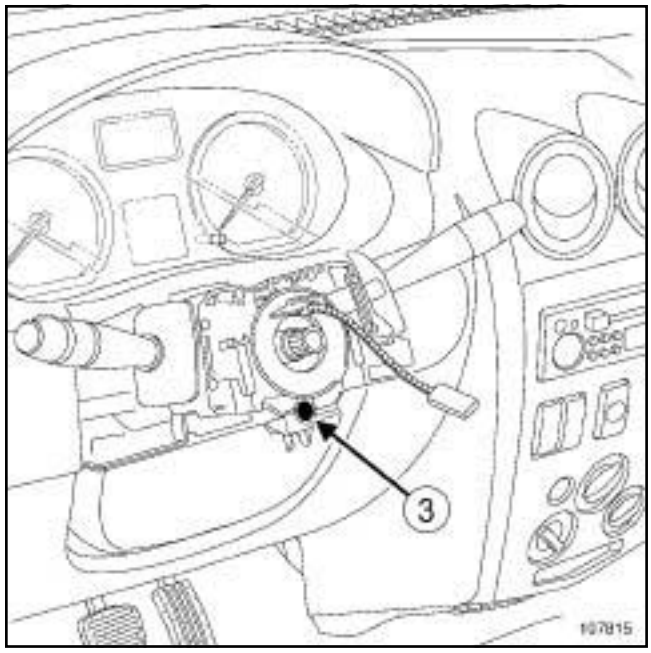

107815

❏ Loosen the bolts (**3**) securing the rotary switch.

❏ Tap the head of a screwdriver to unlock the cone and release the steering column assembly.

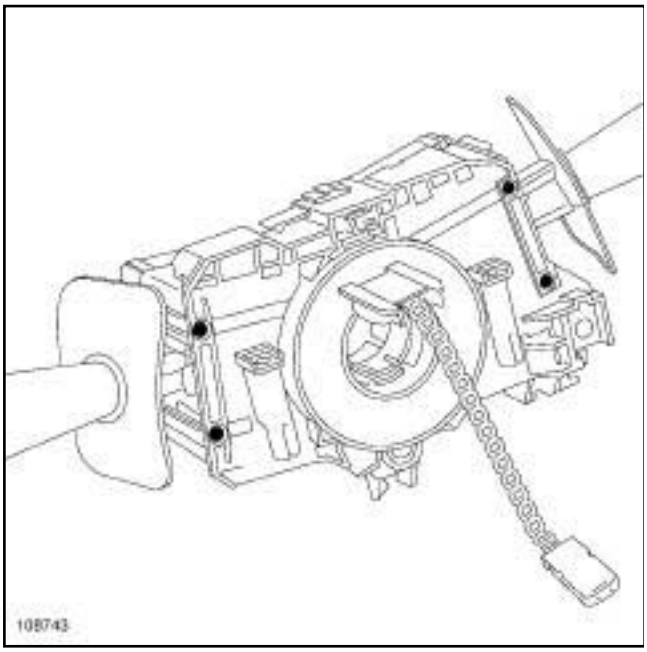

108743

❏

> Note:
>
> Before removing the assembly, it is essential to mark the position of the rotary switch by immobilising the rotary switch rotor with adhesive tape.

❏ Partially remove the steering column switch assembly to disconnect its connectors.

❏ Remove the steering wheel control assembly.

REFITTING

I - REFITTING PREPARATION OPERATION

❏ The steering wheel bolt must always be replaced.

❏ Ensure that the wheels are still straight.

❏ Check that the switch tape is correctly centred (**2.5 rotations** on each side).

> Note:
>
> If the rotary switch is being replaced, the new part is supplied ready centred with an adhesive label which will tear off when the wheel is turned for the first time (wheels must be straight when fitting).

II - REFITTING OPERATION FOR PART CONCERNED

❏ Engage the steering assembly on the steering column.

❏ Connect the various connectors.

❏ Remove the adhesive tape.

> Note:
>
> Continue refitting and do not tighten bolt until the two half-shells are refitted so that the stalks can be aligned with the instrument panel and dashboard. This operation is made easier by a cut-out section giving access to the bolt in the lower half-shell.

❏ Clip on:

- the upper half-shell,
- the lower half-shell.

❏ Refit the two lower bolts.

❏ Position the stalks in alignment with the instrument panel and dashboard.

❏ Tighten the bolts ***(3)*** securing the rotary switch.

III - FINAL OPERATION

❏ Refit:

- the steering wheel (see **Steering wheel: Removal - Refitting**) (36A, Steering),
- the driver's front airbag (see **88C**, **Air bag and Pretensioners**, **Driver's frontal airbag: Removal - Refitting**, page **88C-6**) .

❏ Connect the battery (see **80A**, **Battery**, **Battery: Removal - Refitting**, page **80A-2**) .

❏ Unlock the airbag computer (see **Fault finding - Replacement of components**) (88C, Airbag and pretensioners).

❏ Carry out a function test on the steering column switch assembly.

IV - CHECKING AFTER REPAIR

❏ Switch on the ignition.

❏ Check the operation of the rotary switch:

- turn the steering wheel to the left until it stops,
- turn the steering wheel to the right until it stops,
- bring the steering wheel back to the central position,
- check that there are no faults on the instrument panel.

REMOVAL

I - REMOVAL PREPARATION OPERATION

❏ Switch off the ignition.

❏ Remove the transponder ring (see **82A**, **Engine immobiliser**, **Transponder ring: Removal - Refitting**, page **82A-5**) .

II - OPERATION FOR REMOVAL OF PART CONCERNED

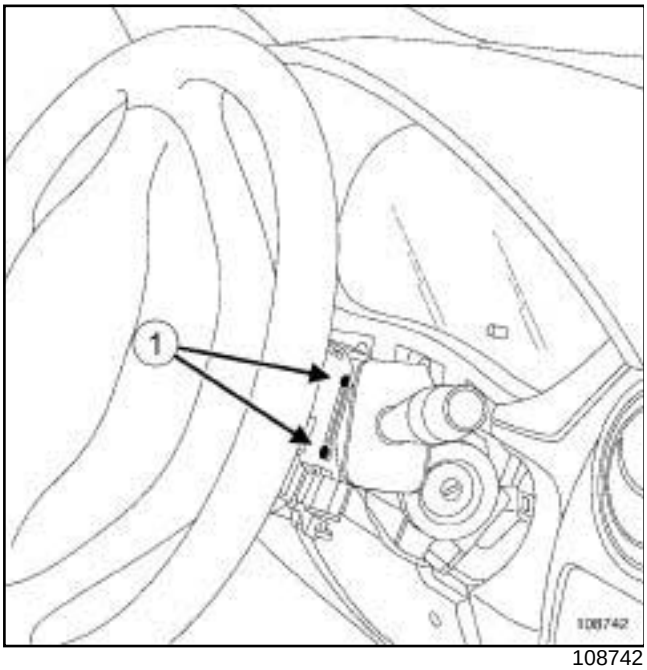

108742

❏ Remove the two bolts (**1**) from the wiping stalk.

❏ Remove the wiping stalk from its support.

❏ Disconnect the connector.

REFITTING

I - REFITTING OPERATION FOR PART CONCERNED

❏ Connect the connector.

❏ Refit:

- the wiping stalk onto its support,
- the bolts to the wiping stalk.

II - FINAL OPERATION.

❏ Refit the transponder ring (see **82A**, **Engine immobiliser**, **Transponder ring: Removal - Refitting**, page **82A-5**) .

REMOVAL

I - REMOVAL PREPARATION OPERATION

❏ Switch off the ignition.

> Note:
>
> The steering wheel does not need to be removed.

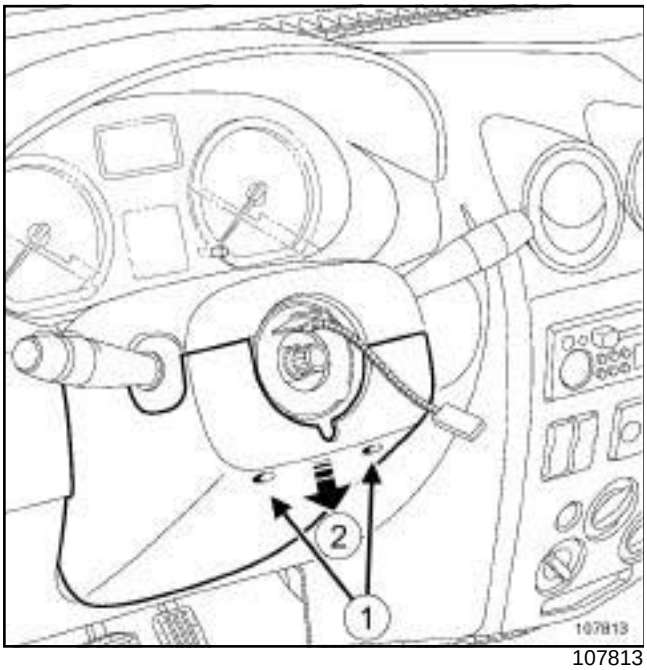

107813

❏ Remove:

- both bolts (**1**) ,
- the lower half-shell at (**2**) .

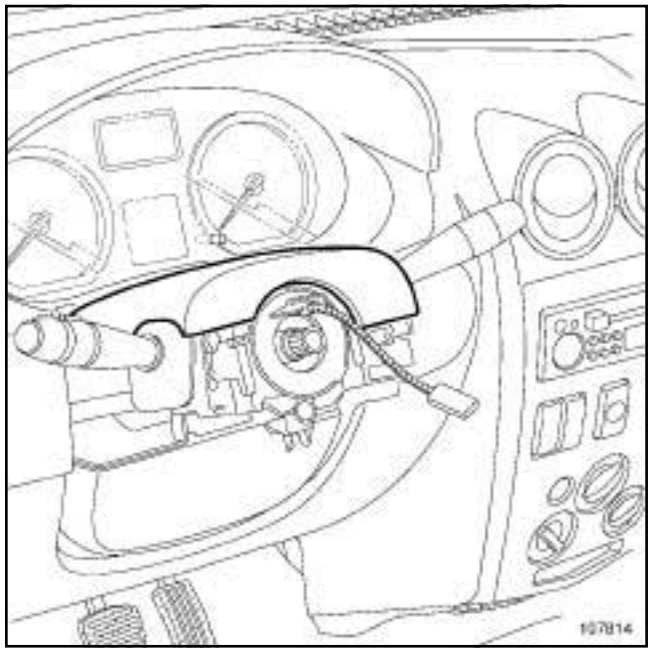

107814

❏ Remove the upper half cowling.

II - OPERATION FOR REMOVAL OF PART CONCERNED

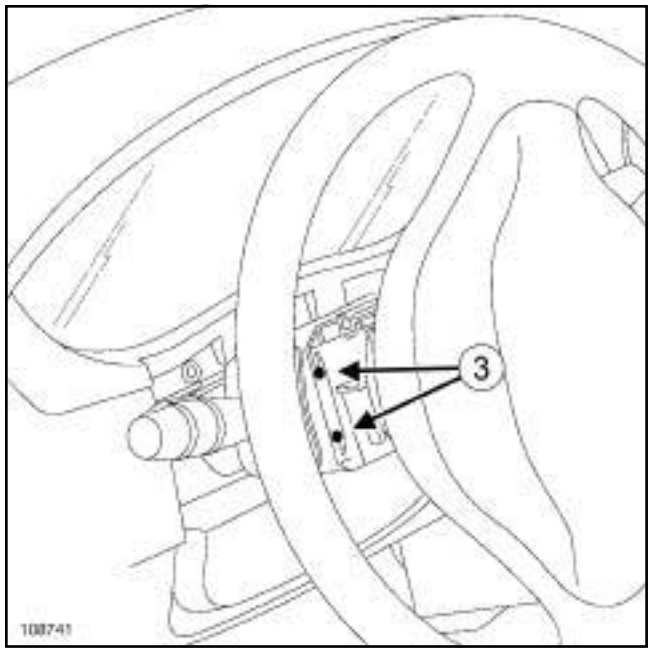

108741

❏ Remove the two bolts (**3**) from the lighting stalk.

❏ Remove the lighting stalk and its mounting.

❏ Disconnect the connector.

REFITTING

I - REFITTING OPERATION FOR PART CONCERNED

❏ Connect the connector.

❏ Refit:

- the lighting stalk on its support,
- the two bolts on the lighting stalk.

II - FINAL OPERATION

❏ Refit:

- the upper half-shell,
- the lower half-shell,
- the two bolts of the lower half-shell.

REMOVAL

I - REMOVAL PREPARATION OPERATION

❑ Remove the radio (see **86A**, **Radio**, **Radio: Removal - Refitting**, page **86A-3**) .

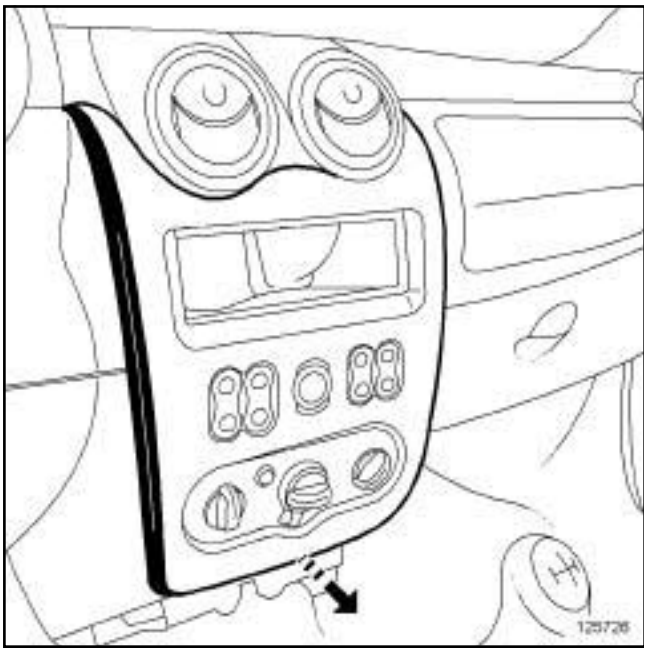

125726

❑ Unclip the central trim assembly, starting at the bottom.

II - OPERATION FOR REMOVAL OF PART CONCERNED

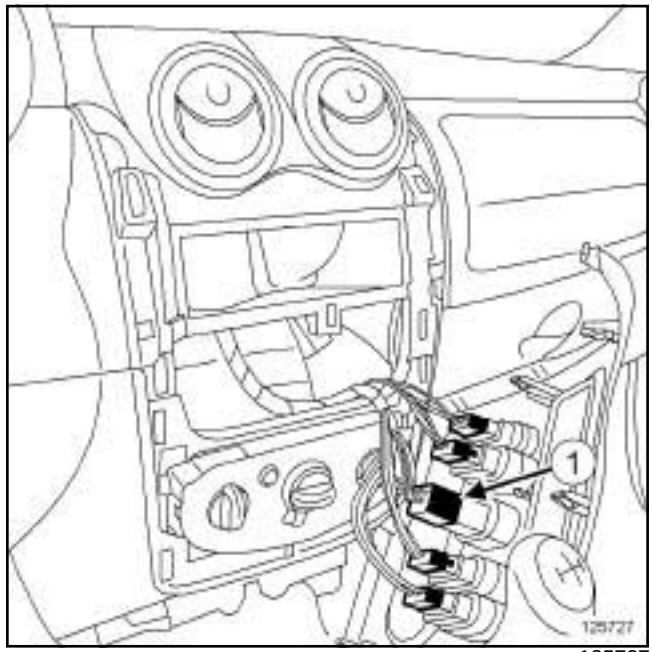

125727

❑ Disconnect the hazard warning lights switch connector (**1**) .

❑ Unclip the hazard warning light switch by moving clips.

REFITTING

I - REFITTING OPERATION FOR PART CONCERNED

❑ Clip on the hazard warning light switch.

❑ Connect the hazard warning lights switch connector.

II - FINAL OPERATION

❑ Clip on the central trim assembly, starting at the top.

❑ Refit the radio (see **86A**, **Radio**, **Radio: Removal - Refitting**, page **86A-3**) .

REMOVAL

I - REMOVAL PREPARATION OPERATION

❏ Remove the radio (see **86A**, **Radio**, **Radio: Removal - Refitting**, page **86A-3**) .

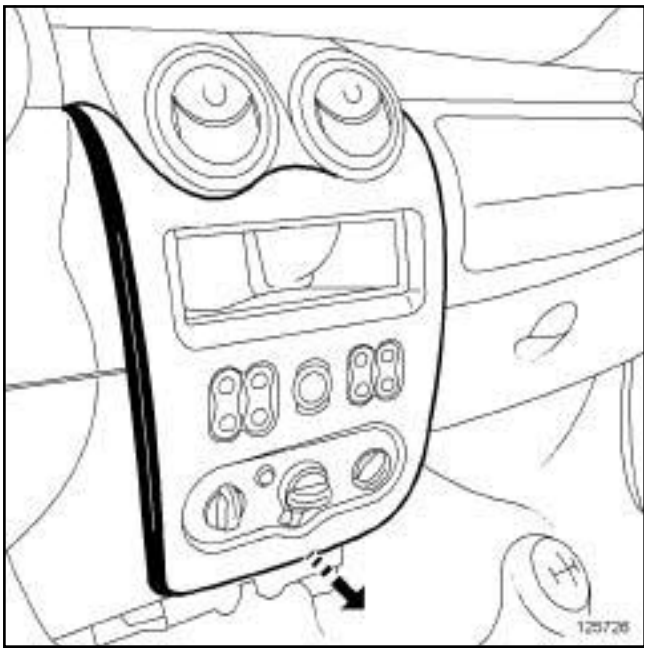

125726

❏ Unclip the central trim assembly, starting at the bottom.

II - OPERATION FOR REMOVAL OF PART CONCERNED

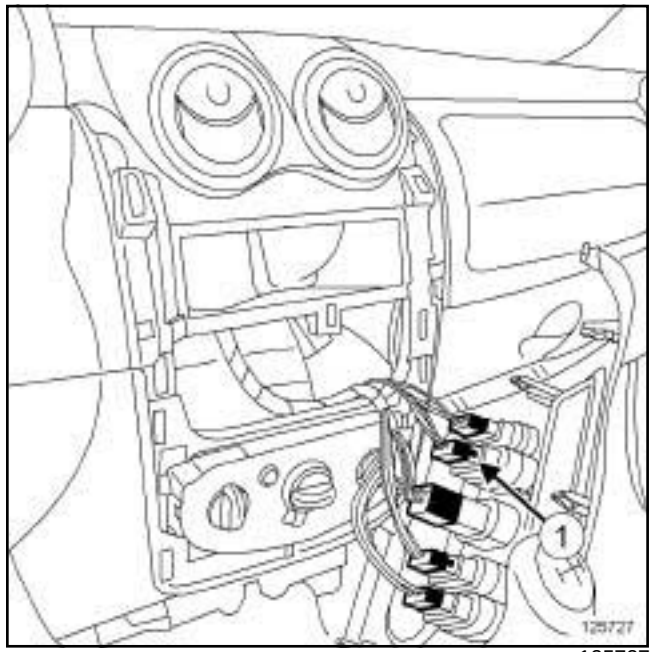

125727

❏ Disconnect the connector (**1**) from the central door locking switch.

❏ Unclip the central locking switch by moving clips.

REFITTING

I - REFITTING OPERATION FOR PART CONCERNED

❏ Clip the door locking switch.

❏ Connect the central door locking switch connector.

II - FINAL OPERATION

❏ Clip on the central trim assembly, starting at the top.

❏ Refit the radio (see **86A**, **Radio**, **Radio: Removal - Refitting**, page **86A-3**) .

REMOVAL

OPERATION FOR REMOVAL OF PART CONCERNED

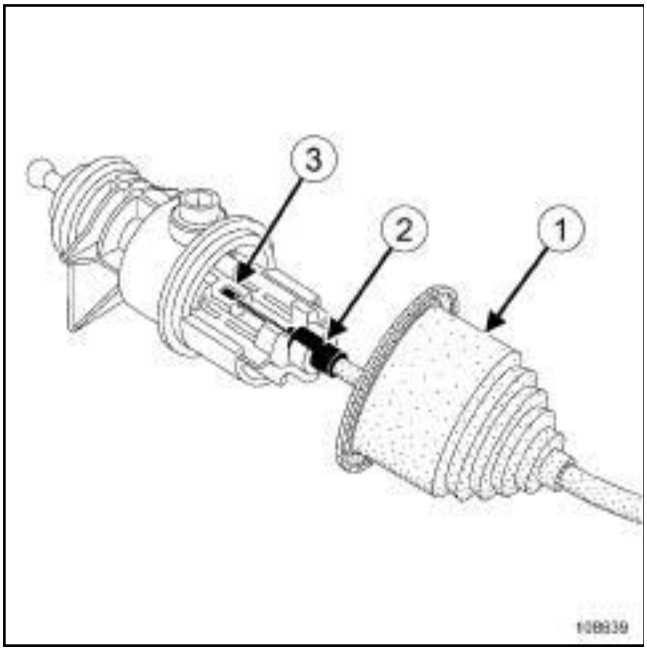

108639

- ❑ Retract the sealing sleeve (**1**) from the left-hand actuator.
- ❑ Unclip the end piece of the left-hand actuator sheath (**2**) .
- ❑ Remove:
  - the cable (**3**) from the left-hand actuator,
  - the sealing sleeve (**1**) .
- ❑ Retract the sealing sleeve (**1**) from the right-hand actuator.
- ❑ Unclip the end piece of the right-hand actuator sheath (**2**) .
- ❑ Remove:
  - the cable (**3**) from the right-hand actuator,
  - the sealing sleeve (**1**) .
- ❑ Unpick the «cables - sheaths» assembly. Note down the position of fitting.

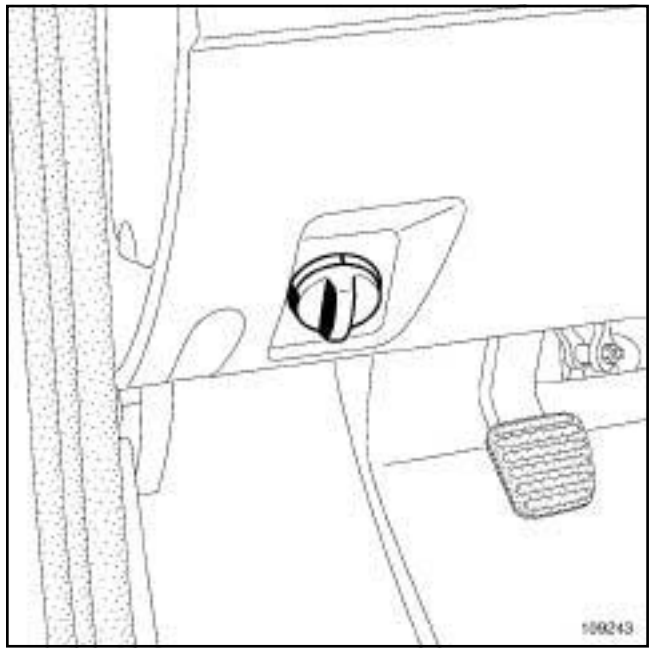

109243

- ❑ Unclip the adjustment knob.

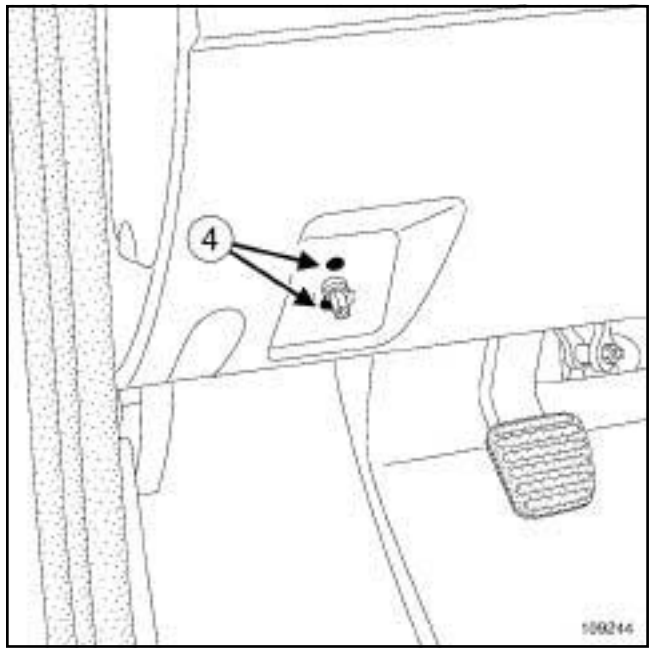

109244

- ❑ Remove the bolts (**4**) .
- ❑ Remove:
  - the adjustment control through the dashboard,
  - the « control - cables - sheaths» assembly from the vehicle interior. Note down the position of fitting.

REFITTING

I - REFITTING OPERATION FOR PART CONCERNED

❏ Refit:

- the « control - cables - sheaths» assembly from the vehicle interior,
- the adjustment control,
- the adjustment control bolts.

❏ Clip on the adjustment knob.

❏ Clip on the « cables - sheaths » assembly.

❏ Refit the sealing sleeves.

❏ Position the cable stop on the right-hand actuator.

❏ Pull the sheath end piece backwards and clip it onto the right-hand actuator.

❏ Position the right-hand actuator sealing sleeve.

❏ Refit the cable stop on the left-hand actuator.

❏ Pull the sheath end piece backwards and clip it onto the left-hand actuator.

❏ Position the left-hand actuator sealing sleeve.

II - FINAL OPERATION.

❏ Adjust the headlights (see **Halogen headlight: Adjustment**) .

2 ELECTRICALLY ADJUSTABLE EXTERNAL REAR VIEW MIRRORS

REMOVAL

OPERATION FOR REMOVAL OF PART CONCERNED

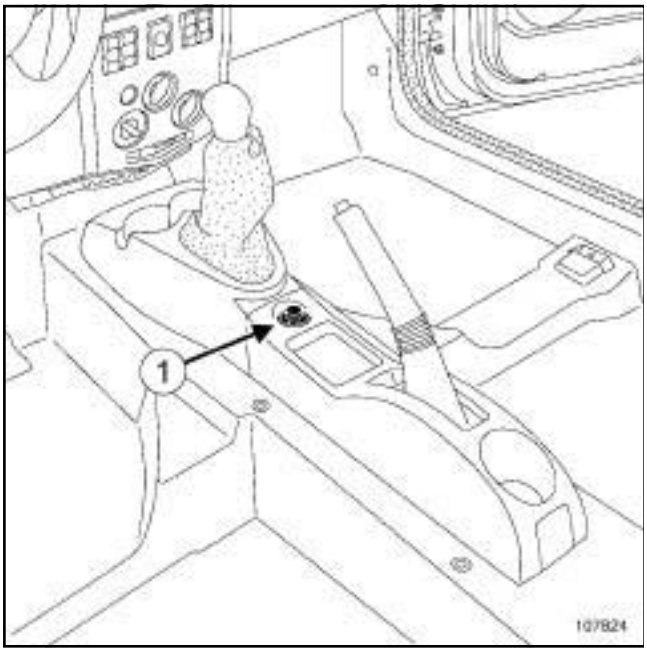

107824

- ❑ Unclip the door mirror switch (**1**) .
- ❑ Disconnect the door mirror switch connector.

REFITTING

REFITTING OPERATION FOR PART CONCERNED

- ❑ Connect the door mirror switch connector.
- ❑ Clip on the door mirror switch.

REMOVAL

I - REMOVAL PREPARATION OPERATION

❑ Remove the radio (see **86A**, **Radio**, **Radio: Removal - Refitting**, page **86A-3**) .

II - OPERATION FOR REMOVAL OF PART CONCERNED

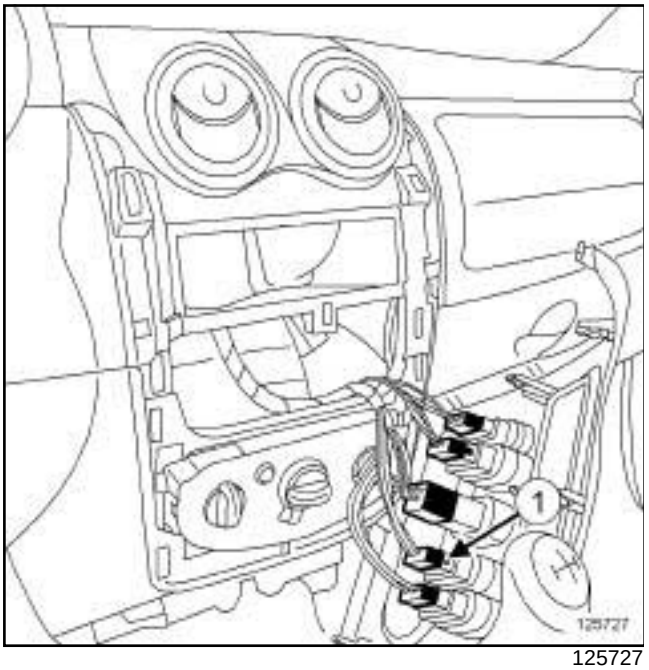

125727

❑ Disconnect the connector (**1**) from the rear screen de-icing switch.

❑ Unclip the heated rear screen switch by moving the clips.

REFITTING

I - REFITTING OPERATION FOR PART CONCERNED

❑ Clip on the heated rear screen switch.

❑ Connect the connector to the heated rear screen switch.

II - FINAL OPERATION.

❑ Clip on the central trim assembly, starting at the top.

❑ Refit the radio (see **86A**, **Radio**, **Radio: Removal - Refitting**, page **86A-3**) .

FRONT SEAT WITH HEATING

REMOVAL

I - REMOVAL PREPARATION OPERATION

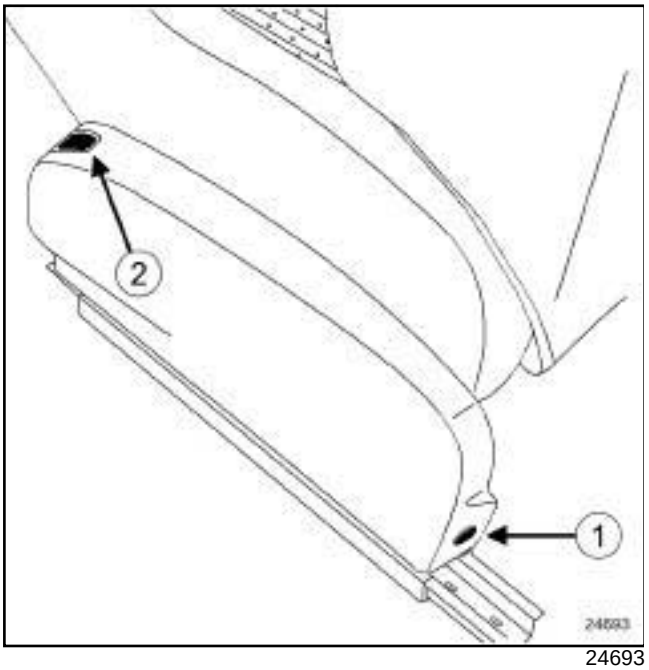

24693

❑ Remove:

- the bolt (**1**) from the exterior runner cover,
- the exterior runner cover.

II - OPERATION FOR REMOVAL OF PART CONCERNED

❑ Unclip the heated seat cover switch ***(2)*** .

❑ Disconnect the heated seat cover switch connector.

REFITTING

I - REFITTING OPERATION FOR PART CONCERNED

❑ Connect the heated seat cover switch connector.

❑ Clip on the heated seat cover switch.

II - FINAL OPERATION.

❑ Refit:

- the exterior runner cover,
- the exterior runner cover bolt.

I - LIST OF COMPONENTS

No.	Description
(1)	UCH
(2)	Passenger compartment fuse box
(3)	Windscreen wiper switch
(4)	Windscreen wiper motor
(5)	Rear screen wiper motor
(6)	Washer pump
(7)	Windscreen washer bottle

II - LOCATION OF COMPONENTS

1 - UCH

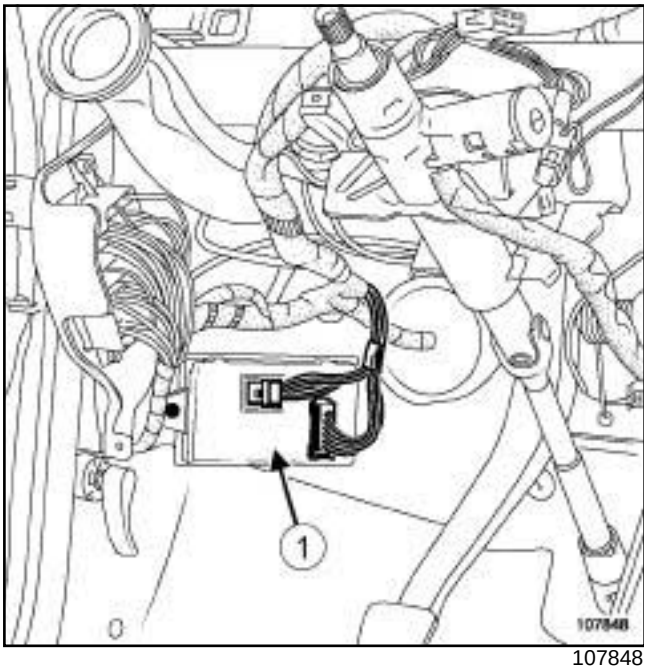

107848

UCH (**1**)

2 - PASSENGER COMPARTMENT FUSE BOX

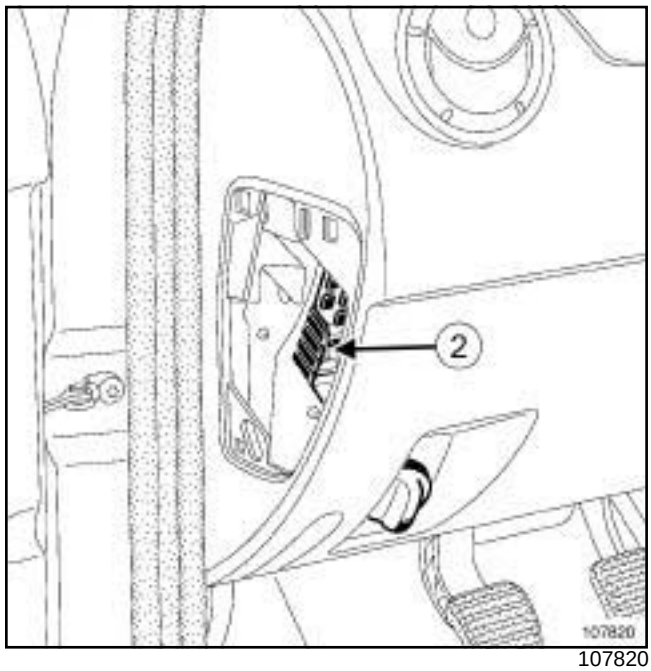

107820

Passenger compartment fuse box (**2**)

3 - WINDSCREEN WIPER SWITCH

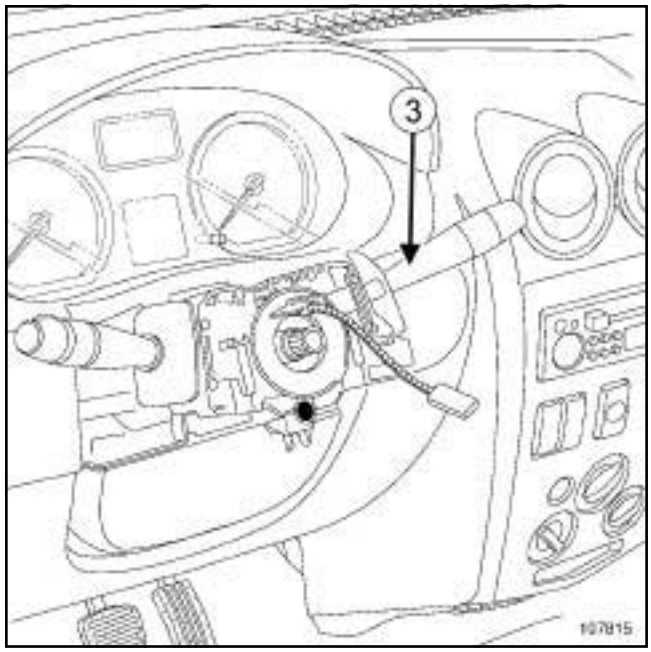

107815

Windscreen wiper switch (**3**)

4 - WINDSCREEN WIPER MOTOR

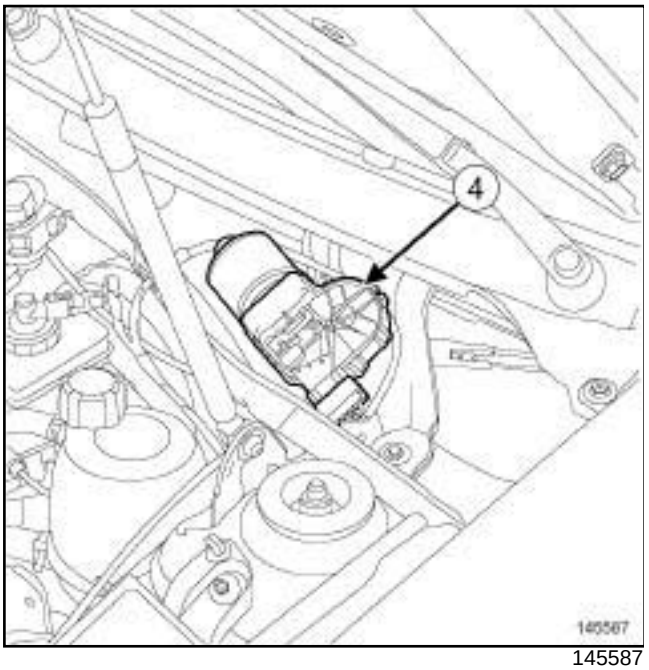

145587

Windscreen wiper motor ***(4)***

5 - REAR SCREEN WIPER MOTOR

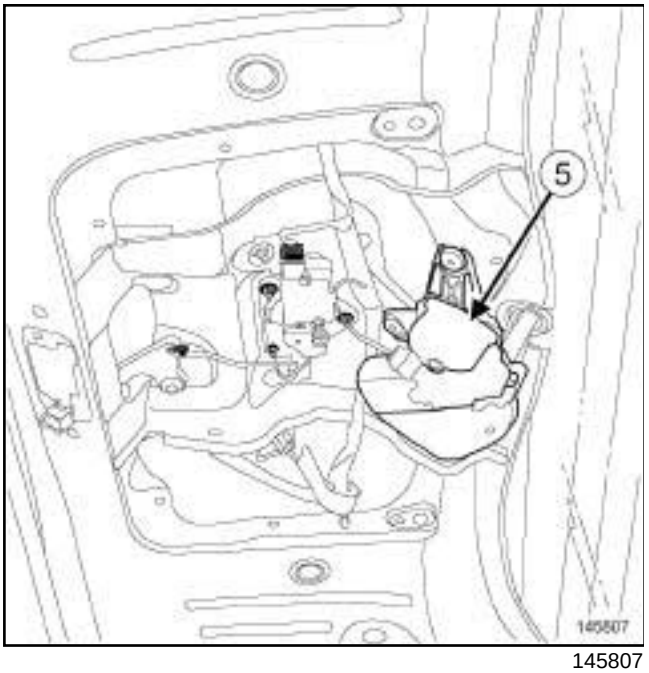

145807

Rear screen wiper motor ***(5)***

6 - WASHER PUMP

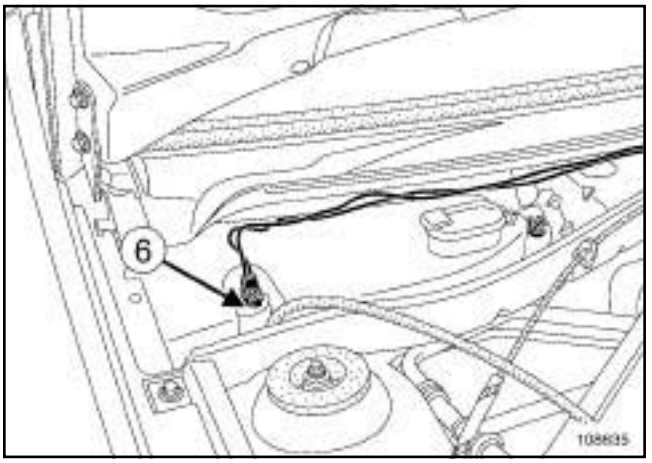

108635

Washer pump (**6**)

7 - WINDSCREEN WASHER BOTTLE

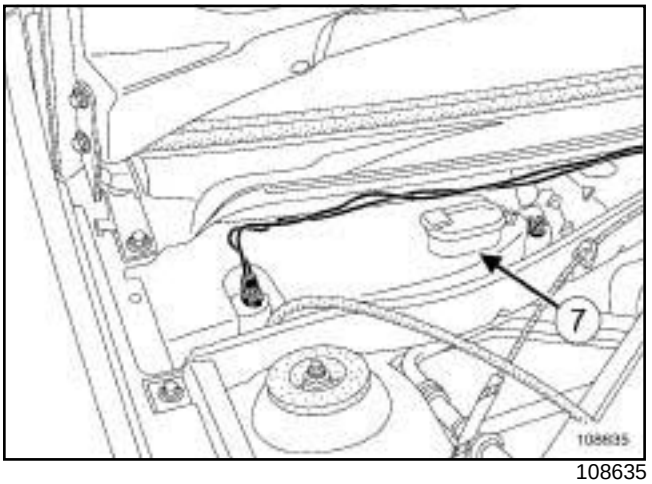

108635

Windscreen washer bottle (**7**)

REMOVAL

OPERATION FOR REMOVAL OF PART CONCERNED

- ❑ Lift the wiper arm.
- ❑ Swivel the blade so it is perpendicular to the wiper arm.

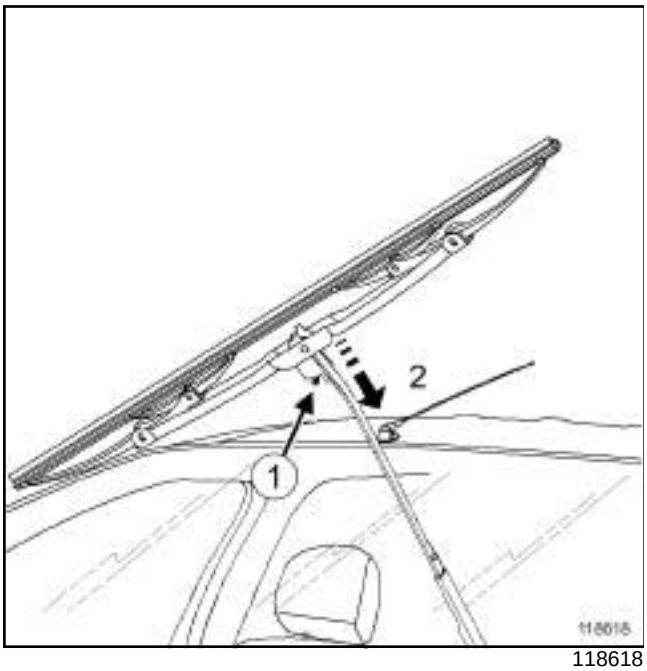

118618

- ❑ Squeeze the clips (**1**) and move downwards at the same time (**2**) .
- ❑ Remove the blade.

REFITTING

REFITTING OPERATION FOR PART CONCERNED

- ❑ Clip the blade onto the wiper arm.
- ❑ Lower the wiper arm.

Tightening torques ▽	
wiper arm nuts	**16 N.m**

REMOVAL

I - REMOVAL PREPARATION OPERATION

❏ Switch on the ignition.

> **WARNING**
> To ensure that the wiper arms can travel smoothly, the wiper motor must be initialised.

❏ Turn the wiper stalk from (0) to (1), and then from (1) to (0).

❏ Switch off the ignition.

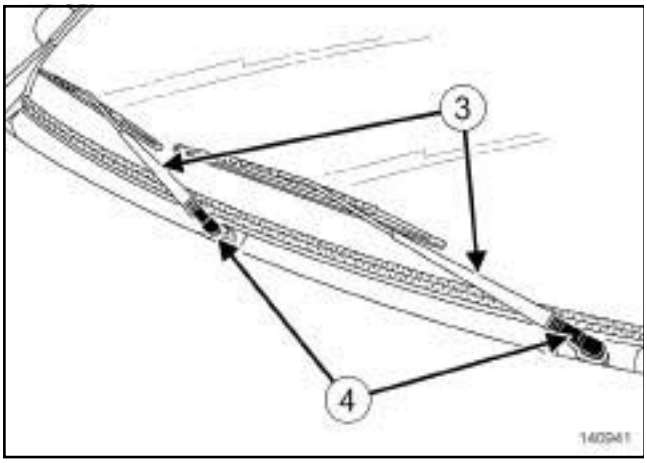

140941

❏ Mark the position of the wiper arms (**3**) .

❏ Fold back the nut covers (**4**) .

II - OPERATION FOR REMOVAL OF PART CONCERNED

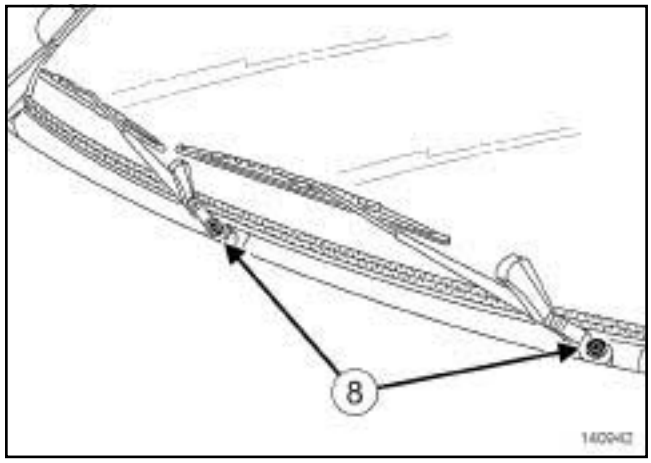

140942

❏ Remove the windscreen wiper arm nuts (**8**) .

❏ Remove the wiper arms using the.

REFITTING

I - REFITTING OPERATION FOR PART CONCERNED

❏ Switch on the ignition.

> **WARNING**
> To ensure that the wiper arms can travel smoothly, the wiper motor must be initialised.

❏ Turn the wiper stalk from (0) to (1), and then from (1) to (0).

❏ Switch off the ignition.

❏ Refit:

- the wiper arms in the position marked before removal,
- the wiper arm nuts.

❏ Torque tighten the **wiper arm nuts (16 N.m)**.

II - FINAL OPERATION

❏ Fit the nut covers.

Tightening torques ▽	
windscreen wiper motor bolts	**8 N.m**
windscreen wiper motor shaft nut	**16 N.m**

REMOVAL

I - REMOVAL PREPARATION OPERATION

❏

> **WARNING**
> To ensure that the wiper arms can travel smoothly, the wiper motor must be initialised.

❏ Turn the wiper stalk from (0) to (1), and then from (1) to (0).

❏ Remove the wiper arms (see **85A**, **Wiping - Washing**, **Windscreen wiper arm: Removal - Refitting**, page **85A-4**) .

❏ Disconnect the battery (see **80A**, **Battery**, **Battery: Removal - Refitting**, page **80A-2**) .

❏ Remove:

- the scuttle panel grille,
- the front windscreen wiper mechanism (see **85A**, **Wiping - Washing**, **Windscreen wiper mechanism: Removal - Refitting**, page **85A-8**) .

II - OPERATION FOR REMOVAL OF PART CONCERNED

LEFT-HAND DRIVE

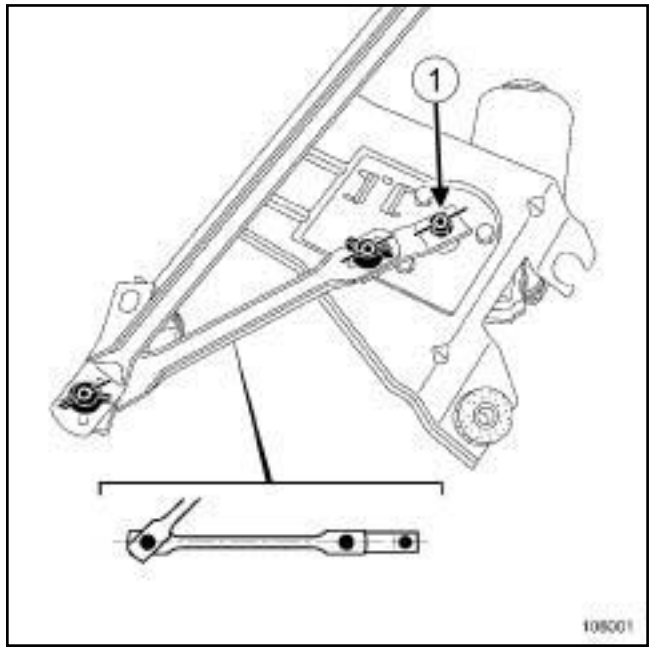

108001

❏ Remove the windscreen wiper motor shaft nut (**1**) .

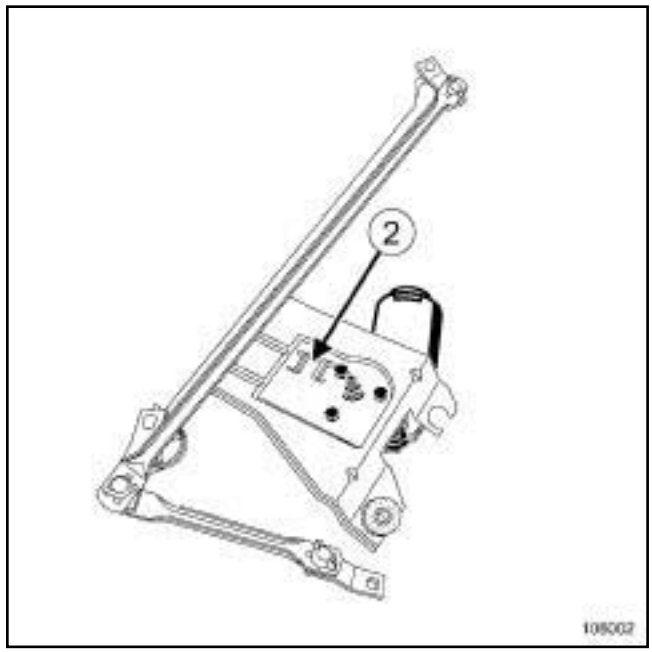

108002

❏ Unclip the windscreen wiper motor connector (**2**) .

RIGHT-HAND DRIVE

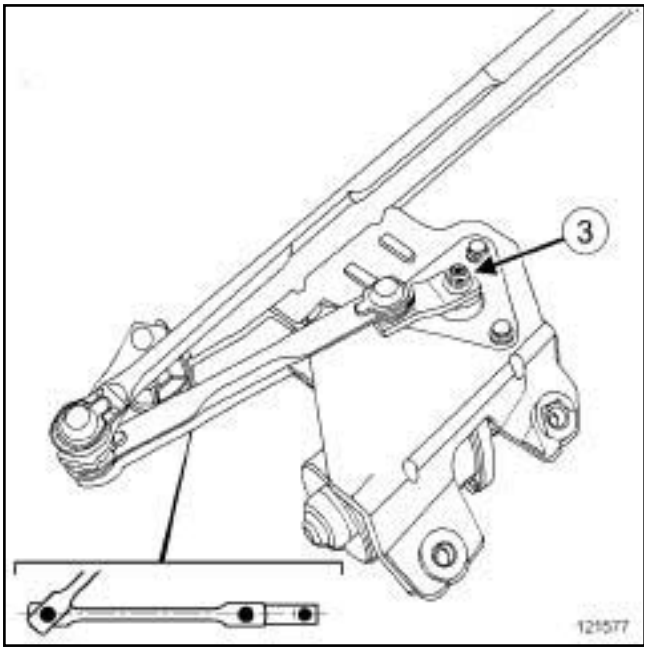

121577

❑ Remove the windscreen wiper motor shaft nut (**3**) .

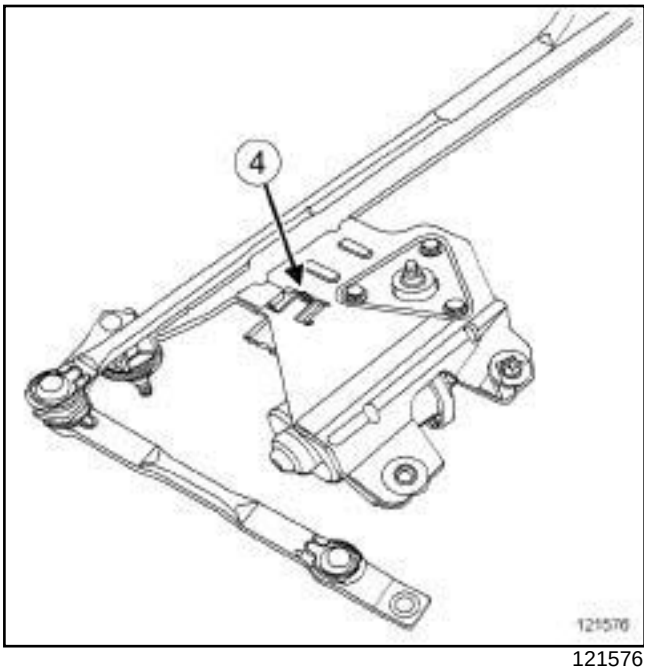

121576

❑ Unclip the windscreen wiper motor connector (**4**) .

❑ Remove:

- the bolts from the windscreen wiper motor,
- the windscreen wiper motor.

REFITTING

I - REFITTING PREPARATION OPERATION

❑ Connect:

- the windscreen wiper motor,
- the battery (see **80A**, **Battery**, **Battery: Removal - Refitting**, page **80A-2**) .

> **WARNING**
> To ensure that the wiper arms can travel smoothly, the wiper motor must be initialised.

❑ Turn the wiper stalk from (0) to (1), and then from (1) to (0).

❑ Disconnect:

- the battery (see **80A**, **Battery**, **Battery: Removal - Refitting**, page **80A-2**) ,
- the windscreen wiper motor.

II - REFITTING OPERATION FOR PART CONCERNED

❑ Refit:

- the windscreen wiper motor,
- the windscreen wiper motor bolts.

❑ Torque tighten the **windscreen wiper motor bolts (8 N.m)**.

❑ Clip the windscreen wiper motor connector.

LEFT-HAND DRIVE

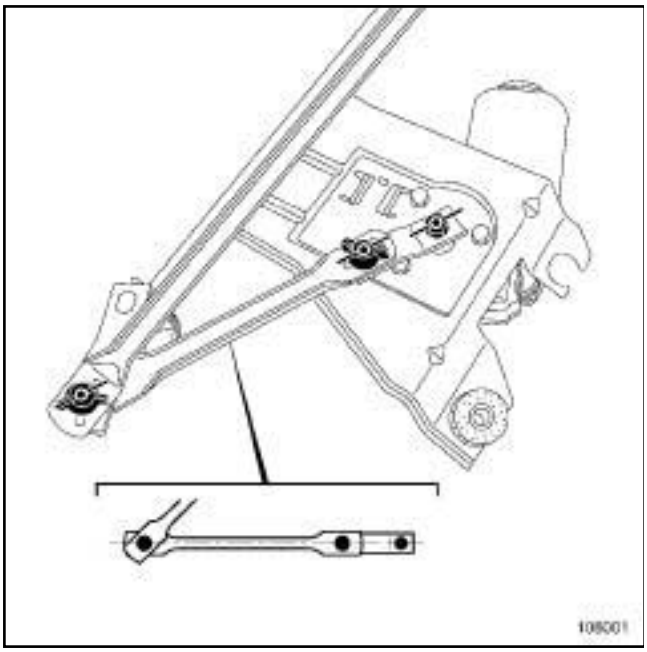

108001

❑ Position the linkages as shown in the above illustration.

RIGHT-HAND DRIVE

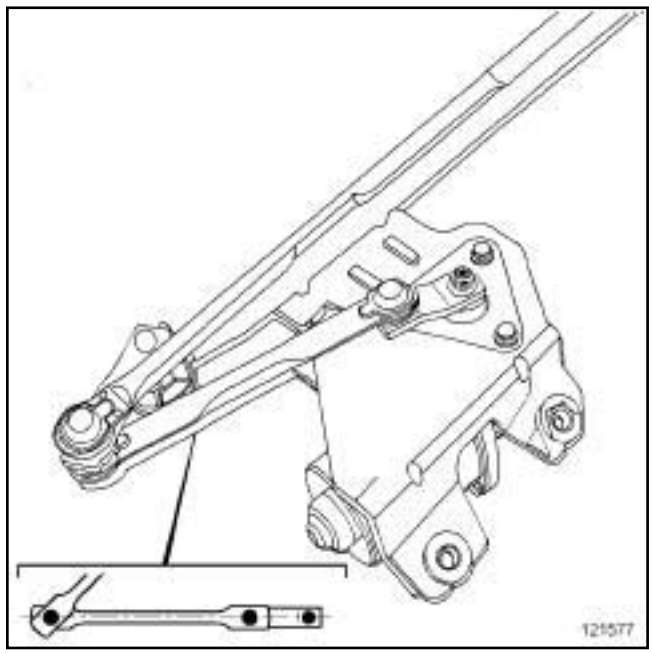

121577

❑ Position the linkages as shown in the above illustration.

❑ Refit the windscreen wiper motor shaft nut.

❑ Torque tighten the **windscreen wiper motor shaft nut (16 N.m)**.

III - FINAL OPERATION

❑ Refit:

- the windscreen wiper mechanism (see **85A**, **Wiping - Washing**, **Windscreen wiper mechanism: Removal - Refitting**, page **85A-8**) ,
- the scuttle panel grille.

❑ Connect the battery (see **80A**, **Battery**, **Battery: Removal - Refitting**, page **80A-2**) .

WARNING
To ensure that the wiper arms can travel smoothly, the wiper motor must be initialised.

❑ Turn the wiper stalk from (0) to (1), and then from (1) to (0).

❑ Refit the wiper arm (see **85A**, **Wiping - Washing**, **Windscreen wiper arm: Removal - Refitting**, page **85A-4**) .

Tightening torques ▽	
windscreen wiper mechanism bolts	**8 N.m**
windscreen wiper mechanism nuts	**8 N.m**

REMOVAL

I - REMOVAL PREPARATION OPERATION

❑

> **WARNING**
> To ensure that the wiper arms can travel smoothly, the wiper motor must be initialised.

❑ Turn the wiper stalk from (0) to (1), and then from (1) to (0).

❑ Disconnect the battery (see **80A**, **Battery**, **Battery: Removal - Refitting**, page **80A-2**) .

❑ Remove the wiper arms (see **85A**, **Wiping - Washing**, **Windscreen wiper arm: Removal - Refitting**, page **85A-4**) .

LEFT-HAND DRIVE

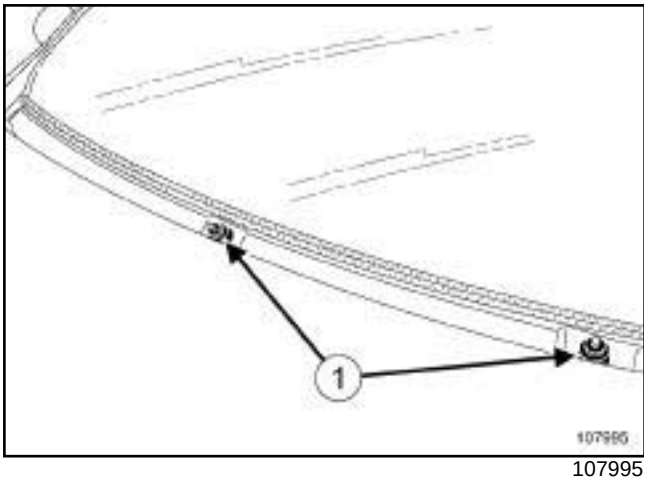

107995

❑ Remove the nut covers (**1**) .

RIGHT-HAND DRIVE

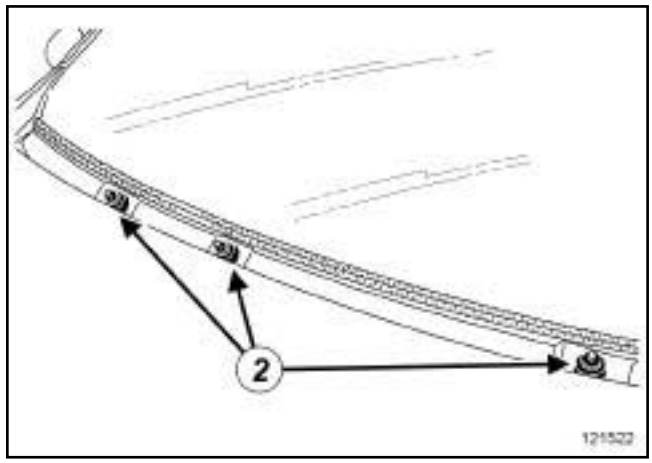

121522

❑ Remove the nut covers (**2**) .

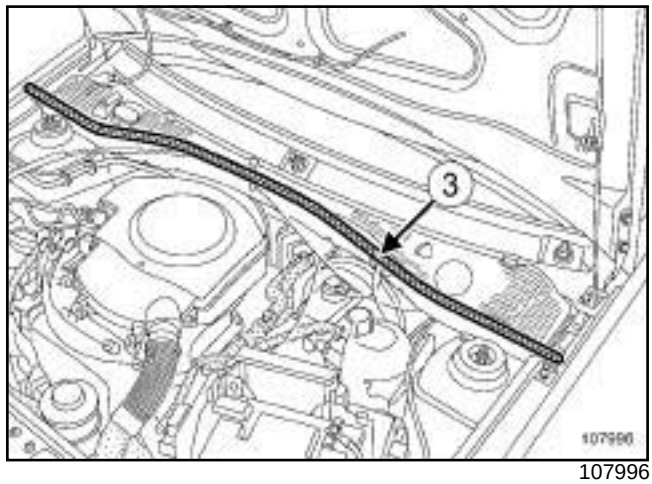

107996

❑ Remove the engine compartment seal (**3**) .

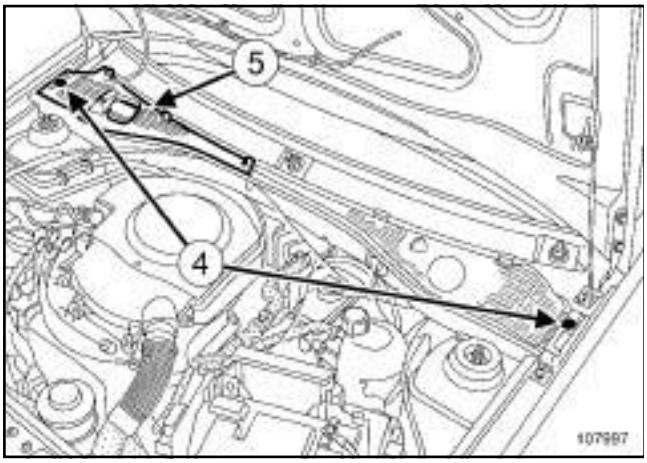

107997

❑ Remove:

- the two scuttle half-grille bolts (**4**) ,
- the right-hand scuttle half-grille (**5**) .

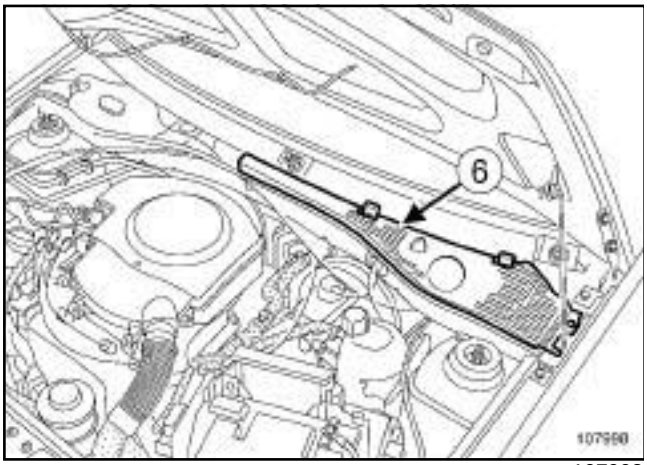

107998

❑ Remove the left-hand scuttle half-grille (**6**) .

II - OPERATION FOR REMOVAL OF PART CONCERNED

LEFT-HAND DRIVE

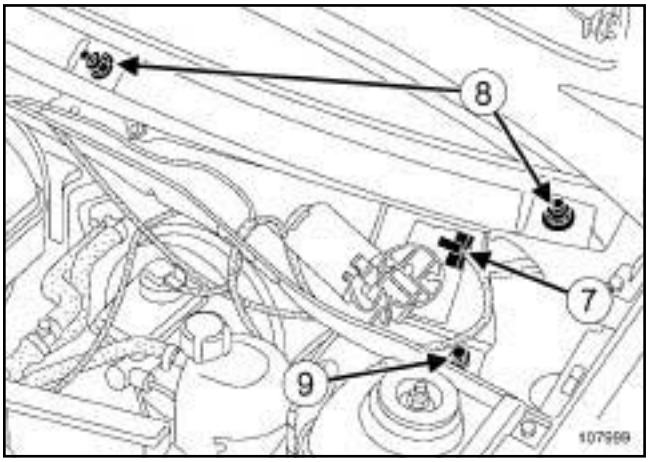

107999

❑ Disconnect the windscreen wiper motor connector (**7**) .

> Note:
>
> The windscreen wiper motor mechanism mountings (**8**) are fragile: the threads are plastic.

❑ Remove:

- the windscreen wiper mechanism bolts (**8**) ,
- the windscreen wiper mechanism bolt (**9**) ,
- the washers.

RIGHT-HAND DRIVE

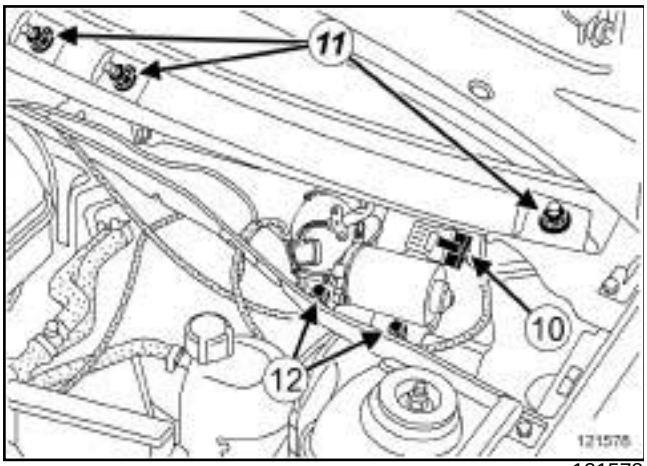

121578

- ❑ Disconnect the windscreen wiper motor connector (**10**) .
- ❑ Remove:
  - the windscreen wiper mechanism bolts (**11**) ,
  - the front windscreen wiper mechanism bolts (**12**) ,
  - the washers.
- ❑ Remove the windscreen wiper mechanism.

REFITTING

I - REFITTING OPERATION FOR PART CONCERNED

- ❑ Refit:
  - the windscreen wiper mechanism,
  - the washers,
  - the windscreen wiper mechanism bolts,
  - the windscreen wiper mechanism bolts.
- ❑ Torque tighten:
  - the **windscreen wiper mechanism bolts (8 N.m)**,
  - the **windscreen wiper mechanism nuts (8 N.m)**.
- ❑ Connect the windscreen wiper motor connector.

II - FINAL OPERATION

- ❑ Refit:
  - the left-hand scuttle half-grille,
  - the right-hand scuttle half-grille,
  - the two scuttle panel grille side bolts,
  - the engine compartment seal,
  - the windscreen wiper mechanism bolt covers.
- ❑ Connect the battery (see **80A**, **Battery**, **Battery: Removal - Refitting**, page **80A-2**) .

> **WARNING**
> To ensure that the wiper arms can travel smoothly, the wiper motor must be initialised.

- ❑ Turn the wiper stalk from (0) to (1), and then from (1) to (0).
- ❑ Refit the wiper arm (see **85A**, **Wiping - Washing**, **Windscreen wiper arm: Removal - Refitting**, page **85A-4**) .

REAR SCREEN WIPER

Special tooling required	
Ele. 1781	Tool for removing windscreen wiper arms

REMOVAL

I - REMOVAL PREPARATION OPERATION

❏ Switch on the ignition.

> **WARNING**
> To ensure that the wiper arms can travel smoothly, the wiper motor must be initialised.

❏ Turn the wiper stalk from (0) to (1), and then from (1) to (0).

❏ Switch off the ignition.

❏ Mark the position of the wiper arm.

II - REMOVAL OPERATION

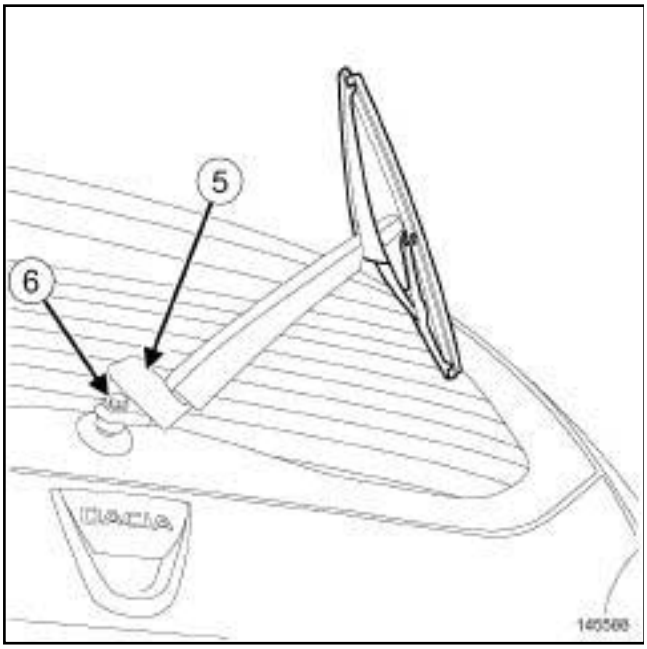

145588

❏ Pull down the nut cover (**5**) .

❏ Remove the nut (**6**) from the wiper arm.

❏ Remove the wiper arm using the **(Ele. 1781)**.

❏ Remove the rear screen wiper blade (see **Rear screen wiper blade: Removal - Refitting**) .

REFITTING

I - REFITTING PREPARATION OPERATION

❏ Switch on the ignition.

> **WARNING**
> To ensure that the wiper arms can travel smoothly, the wiper motor must be initialised.

❏ Turn the wiper stalk from (0) to (1), and then from (1) to (0).

❏ Switch off the ignition.

II - REFITTING OPERATION

❏ Refit the rear screen wiper blade.

❏ Refit:

- the wiper arm,
- the wiper arm nut.

❏ Fit the nut cover.

REMOVAL

I - REMOVAL PREPARATION OPERATION

❏ Switch on the ignition.

> **WARNING**
> To ensure that the wiper arms can travel smoothly, the wiper motor must be initialised.

❏ Move the wiper stalk from (0) to (1), then from (1) to (0).

❏ Switch off the ignition.

❏ Remove:

- the rear screen wiper arm (see **85A**, **Wiping - Washing**, **Rear screen wiper arm: Removal - Refitting**, page **85A-11**) ,
- the tailgate trim (see **Tailgate trim: Removal - Refitting**) (MR 389, 73A, Non-side opening elements trim).

II - OPERATION FOR REMOVAL OF PART CONCERNED

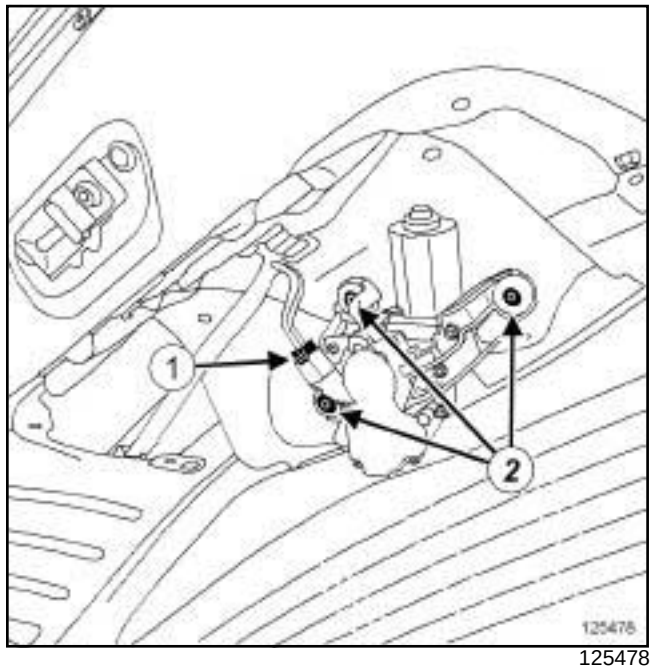

125478

❏ Disconnect the supply connector (**1**) from the rear screen wiper motor.

> Note:
> Take care not to damage the outer skin and door box section with the drill bit. Retrieve the rivet bodies in the door box section.

❏ Drill out the rivets (**2**) (see **MR 400, 40A, General information**).

❏ Remove the rear screen wiper motor.

REFITTING

I - REFITTING PREPARATION OPERATION

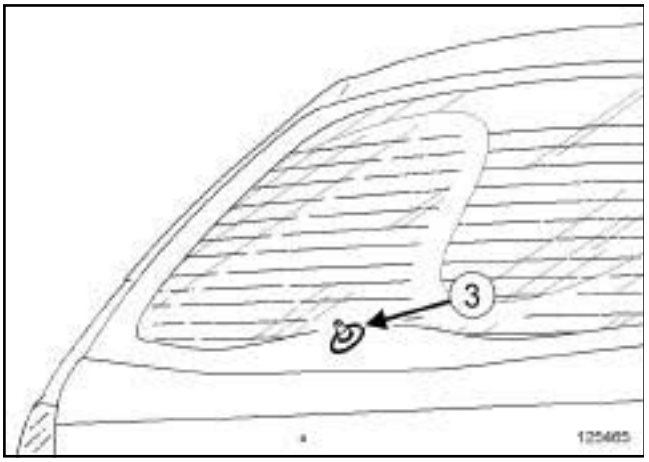

125465

❑ Replace the seal (**3**) if necessary.

II - REFITTING OPERATION FOR PART CONCERNED

❑ Position and rivet the rear screen wiper motor (see **MR 400, 40A, General information**).

❑ Connect the rear screen wiper motor supply connector.

III - FINAL OPERATION.

❑ Switch on the ignition.

> **WARNING**
> To ensure that the wiper arms can travel smoothly, the wiper motor must be initialised.

❑ Move the wiper stalk from (0) to (1), then from (1) to (0).

❑ Switch off the ignition.

❑ Refit:

- the tailgate trim (see **Tailgate trim: Removal - Refitting**) (MR 389, 73A, Non-side opening elements trim),

- the rear screen wiper arm (see **85A**, **Wiping - Washing**, **Rear screen wiper arm: Removal - Refitting**, page **85A-11**) .

LEFT-HAND DRIVE

REMOVAL

I - REMOVAL PREPARATION OPERATION

❑ Remove the windscreen washer bottle (see **85A**, **Wiping - Washing**, **Windscreen washer reservoir: Removal - Refitting**, page **85A-17**) .

II - OPERATION FOR REMOVAL OF PART CONCERNED

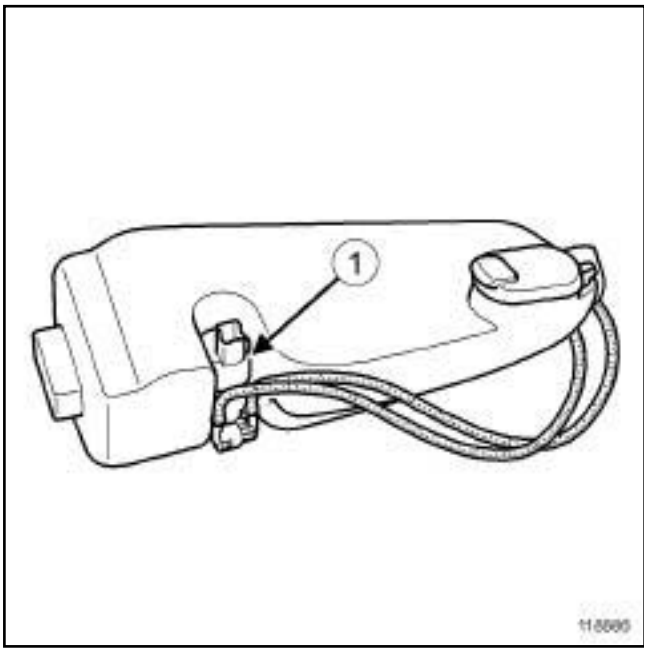

118886

❑ Disconnect the windscreen washer pump (**1**) from the bottle.

❑ Disconnect the windscreen washer pump pipes.

REFITTING

I - REFITTING OPERATION FOR PART CONCERNED

❑ Connect the windscreen washer pump pipes.

❑ Fit the windscreen washer pump onto the bottle.

II - FINAL OPERATION

❑ Refit the windscreen washer bottle (see **85A**, **Wiping - Washing**, **Windscreen washer reservoir: Removal - Refitting**, page **85A-17**) .

❑ Check that the assembly works correctly.

Note:

Adjust the position of the windscreen washer jets if necessary using a needle.

REMOVAL

I - REMOVAL PREPARATION OPERATION

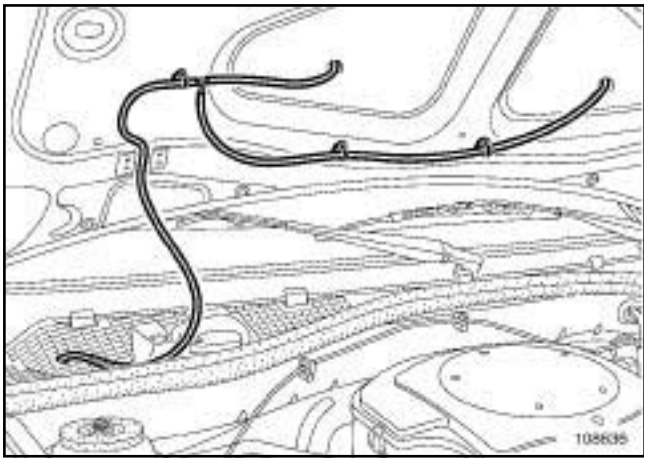

108636

❑ Disconnect the jet supply pipe.

II - OPERATION FOR REMOVAL OF PART CONCERNED

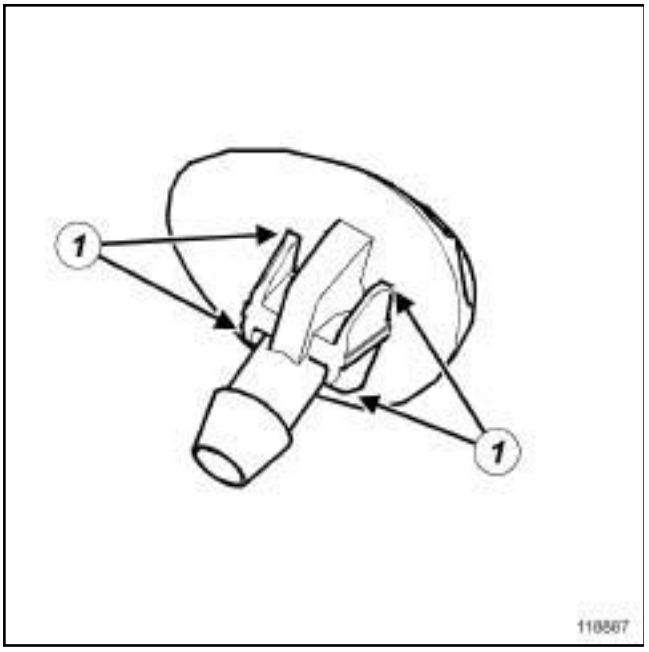

118887

❑ Unclip the windscreen washer jet by prising the clips (**1**) using a flat screwdriver.

> Note:
>
> Take care not to damage the paintwork on the bonnet.

REFITTING

I - REFITTING OPERATION FOR PART CONCERNED

❑ Clip the washer jet.

II - FINAL OPERATION

❑ Connect the jet supply pipe.

❑ Check that the assembly works correctly.

❑ Adjust the position of the rear windscreen washer jet if necessary using a needle.

REAR SCREEN WIPER

Special tooling required	
Car. 1363	Set of trim removal levers.

REMOVAL

I - REMOVAL PREPARATION OPERATION

II - REMOVAL OPERATION

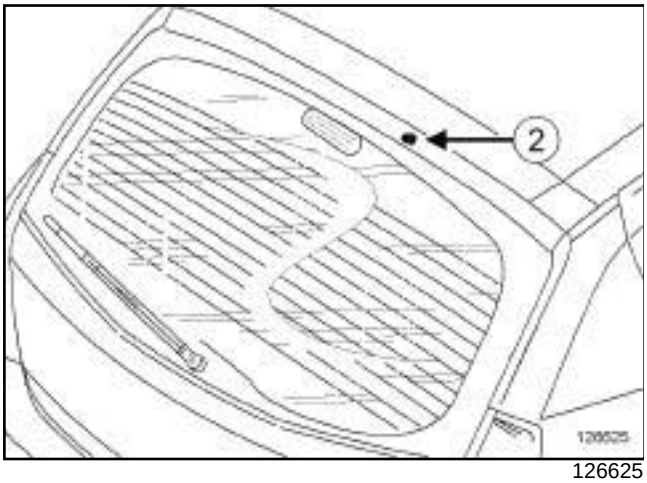

126625

- ❑ Unclip the rear screen washer jet (**2**) using tool **(Car. 1363)**.
- ❑ Disconnect the rear screen washer jet supply pipe.

REFITTING

I - REFITTING OPERATION

- ❑ Connect the rear screen washer jet supply pipe.
- ❑ Clip the rear screen washer jet.

II - FINAL OPERATION

LEFT-HAND DRIVE

REMOVAL

I - REMOVAL PREPARATION OPERATION

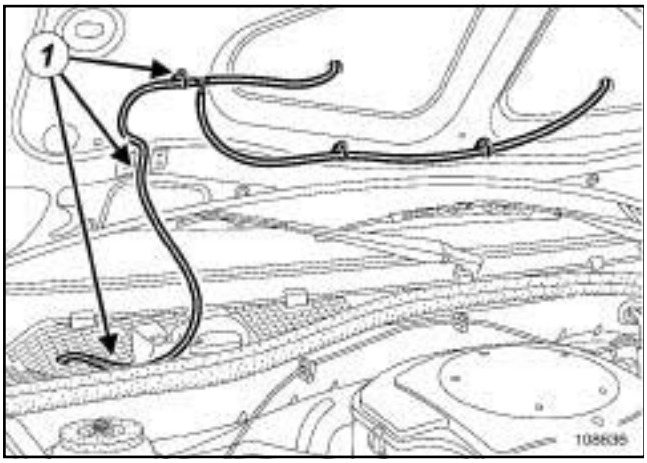

108636

❑ Detach the pipe at (**1**) .

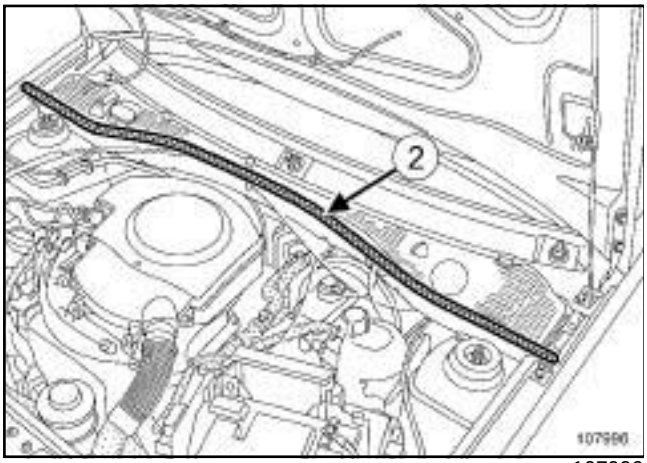

107996

❑ Remove the engine compartment seal (**2**) .

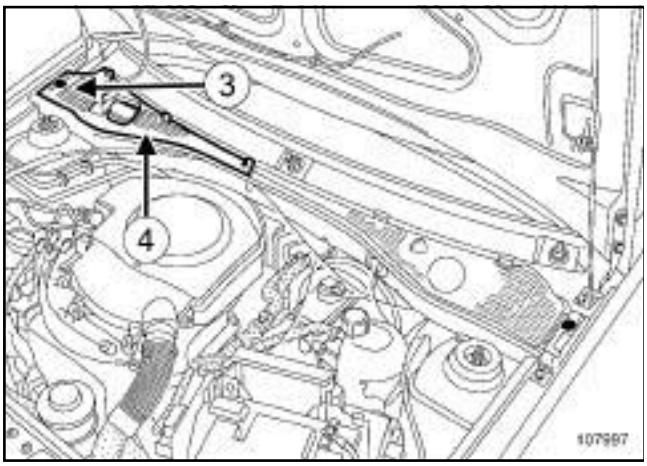

107997

❑ Remove:

- the side bolt (**3**) from the scuttle half-grille,
- the right-hand scuttle half-grille (**4**) .

II - OPERATION FOR REMOVAL OF PART CONCERNED

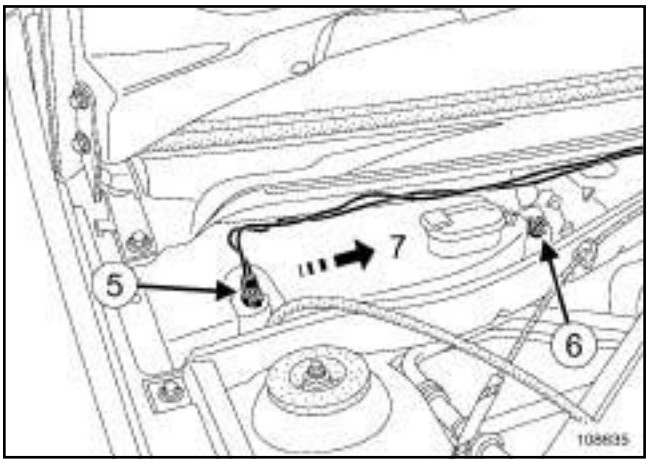

108635

❑ Disconnect the connector (**5**) from the windscreen washer pump.

❑ Remove:

- the bolt (**6**) from the windscreen washer bottle,
- the windscreen washer bottle by pulling it in the direction of the arrow (**7**) .

❑ Drain the windscreen washer bottle.

❑ Disconnect the windscreen washer pump from the bottle.

REFITTING

I - REFITTING OPERATION FOR PART CONCERNED

❑ Fit the windscreen washer pump onto the bottle.

❑ Refit:

- the windscreen washer bottle,
- the windscreen washer bottle bolt.

II - FINAL OPERATION.

❑ Connect the windscreen washer pump connector.

❑ refit:

- the right-hand scuttle half-grille,
- the side bolt to the scuttle half-grille,
- the engine compartment seal.

❑ Clip the pipe at ***(1)*** .

❑ Fill-up the windscreen washer bottle.

Radio: List and location of components

RADIO NO. 01 or RADIO NO. 02

I - LIST OF COMPONENTS

No.	Description
(1)	Radio
(2)	Aerial
(3)	Front speakers
(4),(5)	Rear speakers

II - LOCATION OF COMPONENTS

1 - RADIO

107821

2 - AERIAL

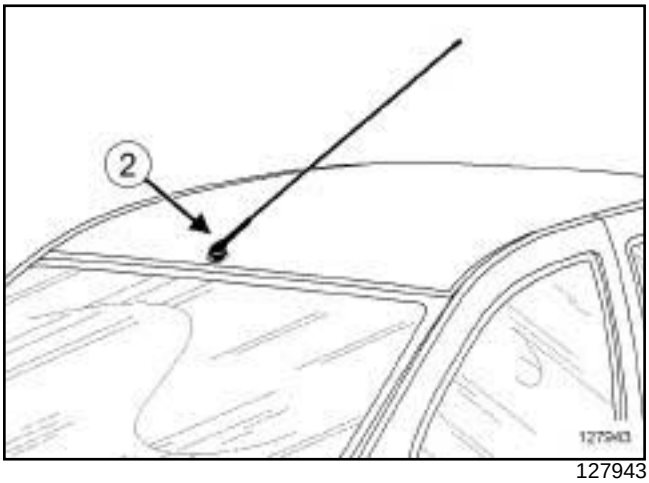

127943

The radio aerial (**2**) is located on the roof

3 - FRONT SPEAKERS

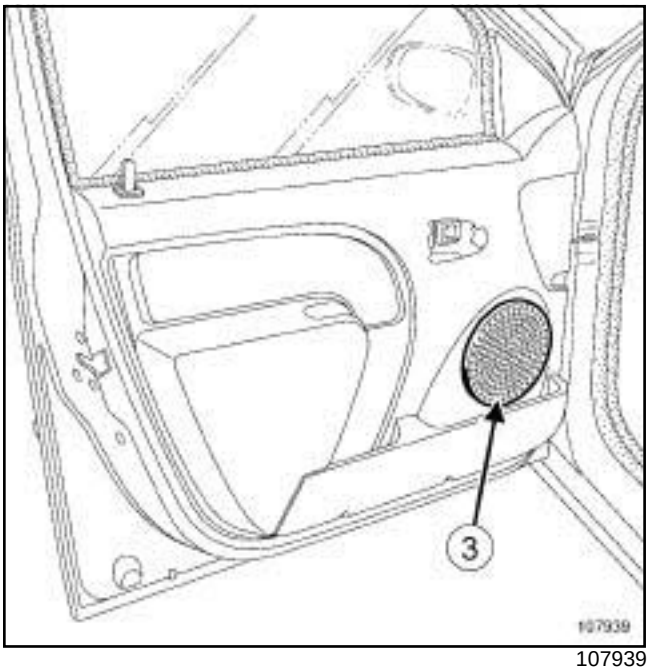

107939

RADIO NO. 01 or RADIO NO. 02

4 - REAR SPEAKERS

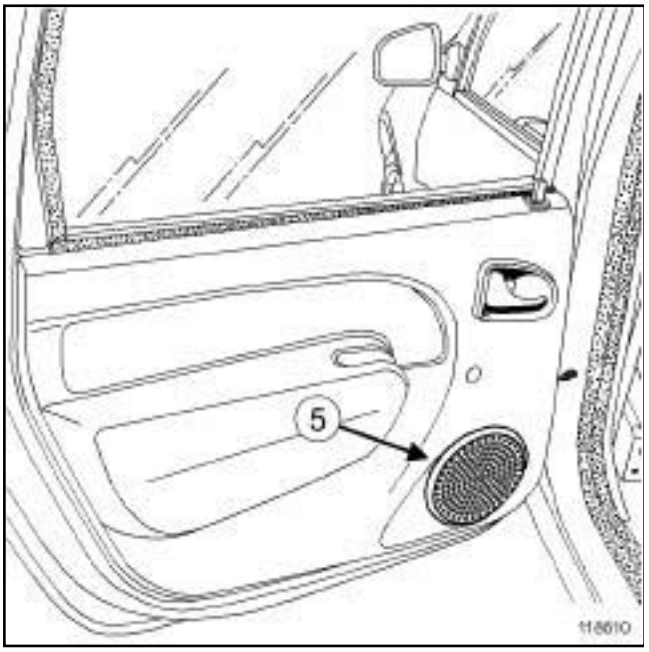

118610

RADIO NO. 01 or RADIO NO. 02

REMOVAL

I - REMOVAL PREPARATION OPERATION

❏ Switch off the ignition.

II - OPERATION FOR REMOVAL OF PART CONCERNED

119085

❏ Remove the radio (**1**) using the two.

❏

WARNING

To ensure correct operation:

- do not pinch the aerial cable,
- do not bend the aerial cable,
- do not force the aerial cable when refitting.

WARNING

To prevent any risk of noise, premature wear, short circuits, etc. after the refitting operation, mark the wiring routing and how to connect the connectors.

Mark the routing of the wiring behind the radio.

❏ Disconnect the connectors.

REFITTING

I - REFITTING PREPARATION OPERATION

❏

Note:

Ensure that the ignition is switched off.

II - REFITTING OPERATION FOR PART CONCERNED

❏ Connect the various connectors.

❏ Fit the wiring in the position marked during removal.

❏ Refit the radio in its housing.

REMOVAL

I - REMOVAL PREPARATION OPERATION

❑

> Note:
>
> The radio aerial is located on the front roof.

❑ Remove:

- front courtesy light (see **81B**, **Interior lighting**, **Interior light: Removal - Refitting**, page **81B-3**) ,
- the headlining partially (see **Headlining: Removal - Refitting**) (MR 389, 71A, Body internal trim).

II - OPERATION FOR REMOVAL OF PART CONCERNED

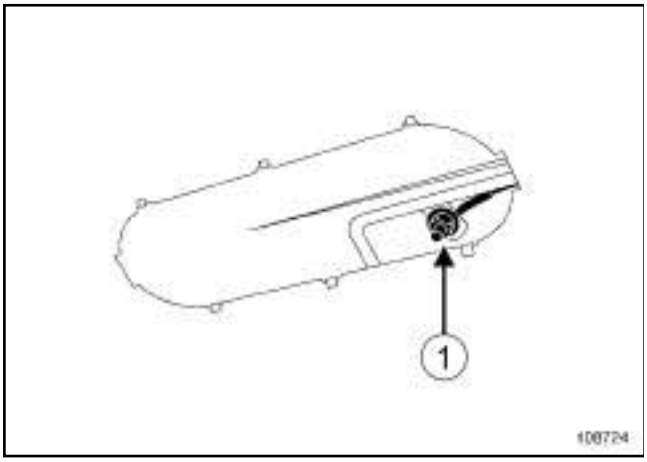

108724

❑ Remove the radio aerial nut (**1**) .

❑ Disconnect the connector from the radio aerial cable.

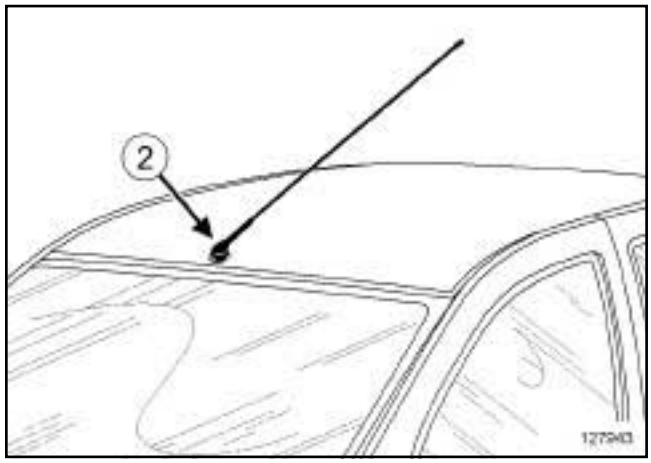

127943

❑ Remove the radio aerial (**2**) .

> Note:
>
> To remove the radio aerial cable, remove the dashboard (see **Dashboard: Removal - Refitting**) (MR 389, 57A, Interior equipment).

REFITTING

REFITTING OPERATION FOR PART CONCERNED

❑ Refit the radio aerial.

❑ Connect the radio aerial cable connector.

❑ Refit the radio aerial nut.

FINAL OPERATION

❑ Refit:

- the headlining (see **Headlining: Removal - Refitting**) (MR 389, 71A, Body internal trim),
- front courtesy light (see **81B**, **Interior lighting**, **Interior light: Removal - Refitting**, page **81B-3**) .

RADIO NO. 01 or RADIO NO. 02

REMOVAL

I - REMOVAL PREPARATION OPERATION

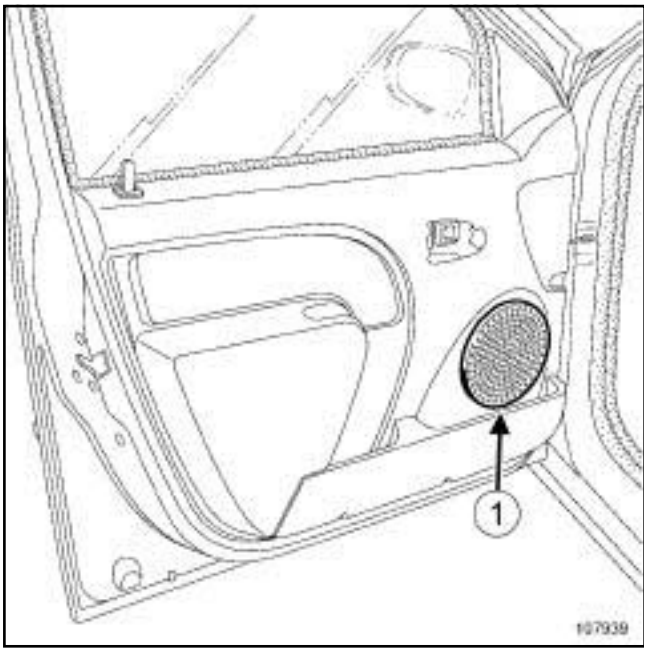

107939

❑ Unclip the front speaker grille (**1**) .

II - OPERATION FOR REMOVAL OF PART CONCERNED

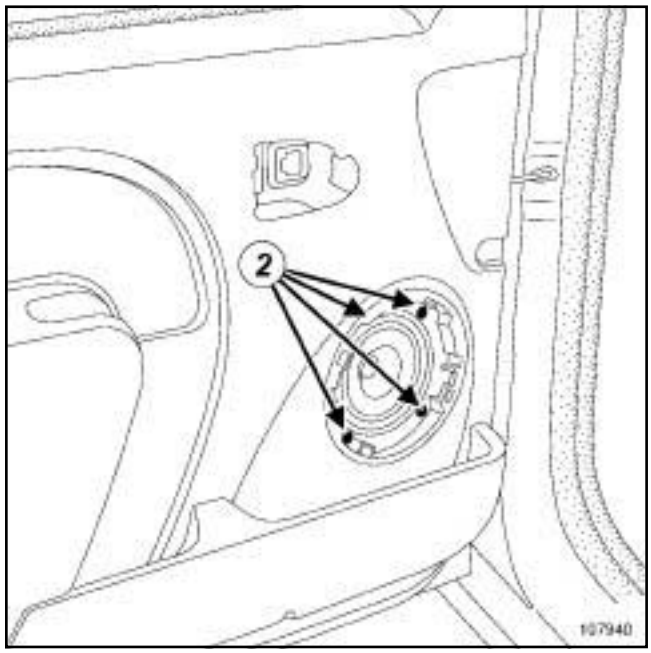

107940

❑ Remove:

- the bolts (**2**) from the front speaker,
- the front speaker.

❑ Disconnect the front speaker connector.

REFITTING

I - REFITTING OPERATION FOR PART CONCERNED

❑ Connect the front speaker connector.

❑ Refit:

- the front speaker,
- the front speaker bolts.

II - FINAL OPERATION.

❑ Clip on the front speaker grille.

RADIO NO. 01 or RADIO NO. 02

REMOVAL

I - REMOVAL PREPARATION OPERATION

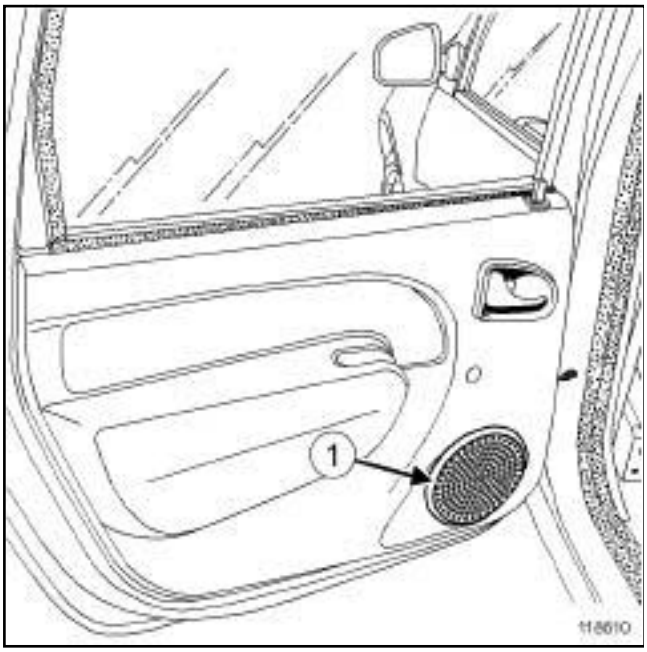

118610

❑ Unclip the rear speaker grille (**1**) .

II - OPERATION FOR REMOVAL OF PART CONCERNED

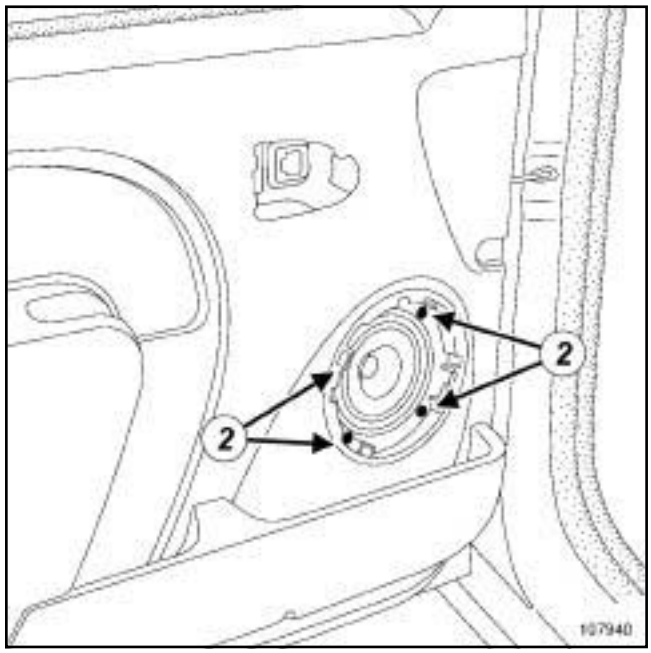

107940

❑ Remove:

- the bolts (**2**) ,
- the speaker.

❑ Disconnect the connector.

REFITTING

I - REFITTING OPERATION FOR PART CONCERNED

❑ Connect the connector.

❑ Refit:

- the speaker,
- the bolts.

II - FINAL OPERATION.

❑ Clip in the rear speaker grille.

REMOVAL

I - REMOVAL PREPARATION OPERATION

❏ Switch off the ignition.

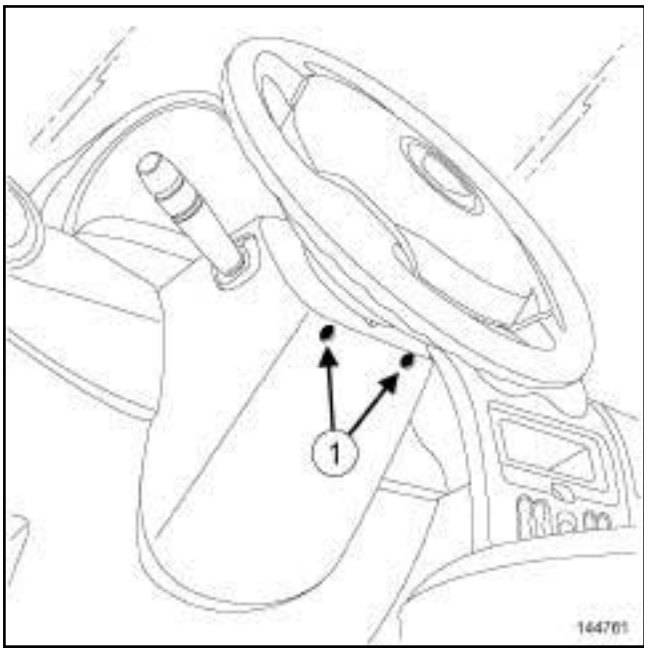

144761

❏ Remove the bolts (**1**) from the shells under the steering wheel.

❏ Put the steering column into the lower position.

❏ Remove the upper cover.

❏ Place the steering column in the upper position.

❏ Remove the lower cover.

II - REMOVAL OPERATION

❏

> Note:
>
> The steering column switch assembly does not need to be removed.

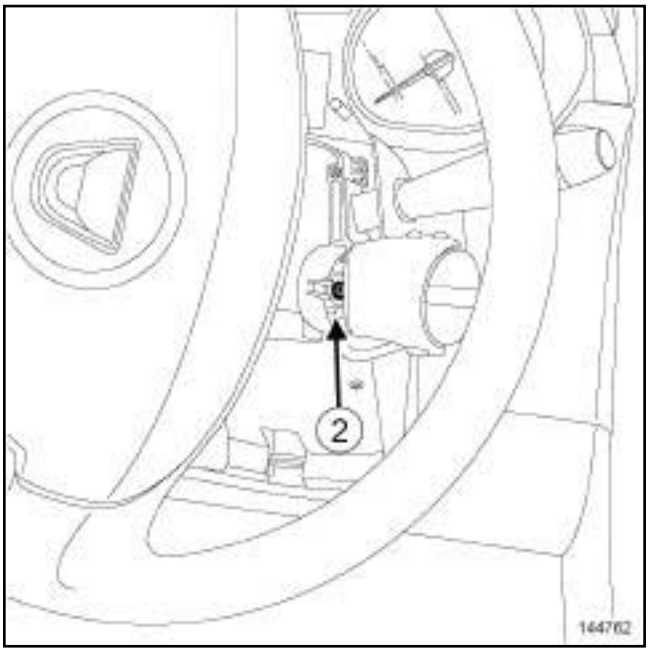

144762

❏ Remove the radio control satellite bolt (**2**) .

❏ Disconnect the radio control satellite connector.

❏ Remove the radio control satellite.

REFITTING

I - REFITTING OPERATION

❏ Connect the radio control satellite connector.

❏ Refit the radio control satellite.

II - FINAL OPERATION

❏ Proceed in the reverse order to removal.

Equipment required
Diagnostic tool

REMOVAL

I - REMOVAL PREPARATION OPERATION

❑

> Note:
>
> If replacing the UCH, it is essential to display the configurations using **Diagnostic tool**.

❑ Switch off the ignition.

❑ Disconnect the battery (see **80A**, **Battery**, **Battery: Removal - Refitting**, page **80A-2**) .

II - OPERATION FOR REMOVAL OF PART CONCERNED

107848

❑ Disconnect the connectors (**1**) .

❑ Remove:

- the UCH bolt (**2**) ,
- the UCH.

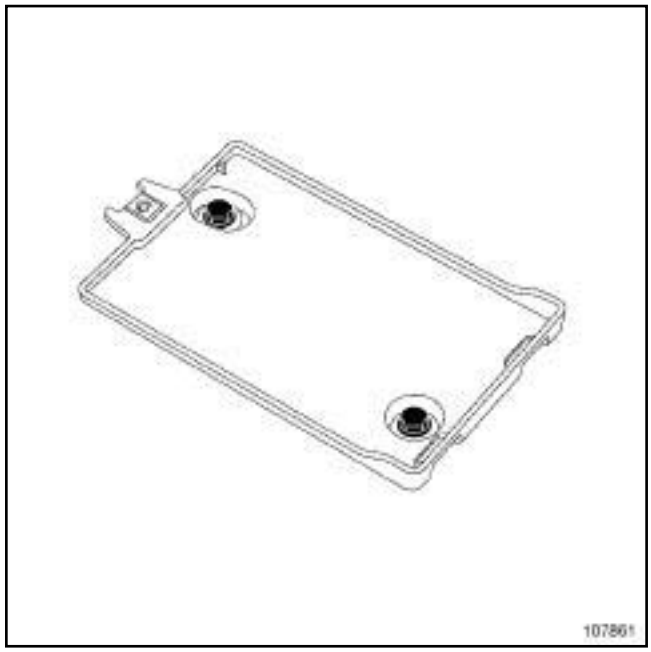

107861

❑

> Note:
>
> The UCH is secured onto its mounting.

REFITTING

I - REFITTING OPERATION FOR PART CONCERNED

❑ Refit:

- the UCH,
- the UCH bolt.

❑ Connect the connectors.

II - FINAL OPERATION.

❑ Connect the battery (see **80A**, **Battery**, **Battery: Removal - Refitting**, page **80A-2**) .

❑ If the UCH has to be replaced, carry out the necessary operations (see **Fault finding - Replacement of components**) (87B, Passenger compartment connection unit).

Electric window: List and location of components

ELECTRIC FRONT WINDOW or FRONT ONE-TOUCH ELECTRIC WINDOW – ELECTRIC FRONT WINDOW or FRONT ONE-TOUCH ELECTRIC WINDOW, and ELECTRIC REAR WINDOW

I - LIST OF COMPONENTS

No.	Description
(1)	Passenger compartment fuse box
(2)	Front window winder switches

ELECTRIC REAR WINDOW

No.	Description
(3)	Rear electric window switches
(4)	Child lock switch

II - LOCATION OF COMPONENTS

1 - PASSENGER COMPARTMENT FUSE BOX

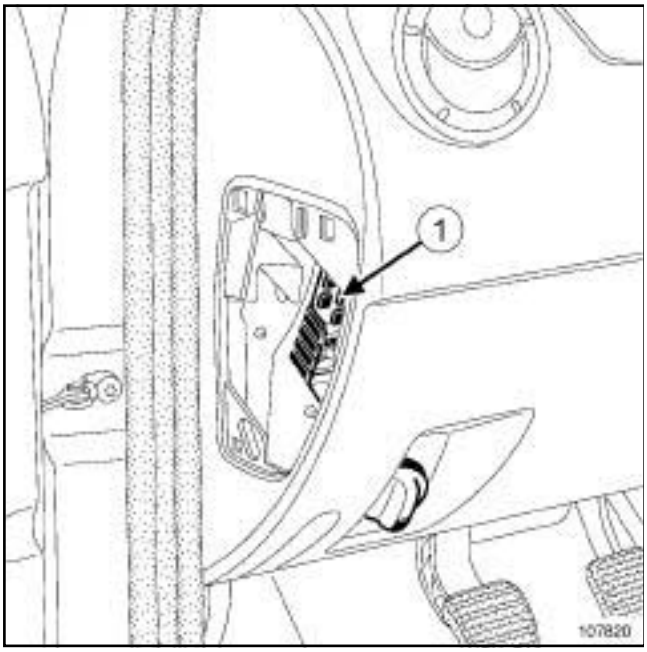

107820

Passenger compartment fuse box (**1**)

2 - FRONT WINDOW WINDER SWITCHES

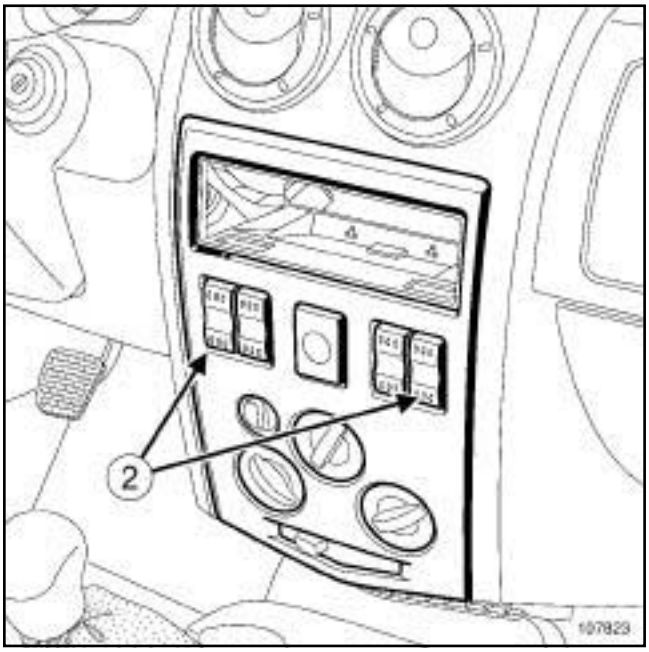

107823

Front window winder switches (**2**)

ELECTRIC REAR WINDOW

3 - REAR WINDOW WINDER SWITCHES

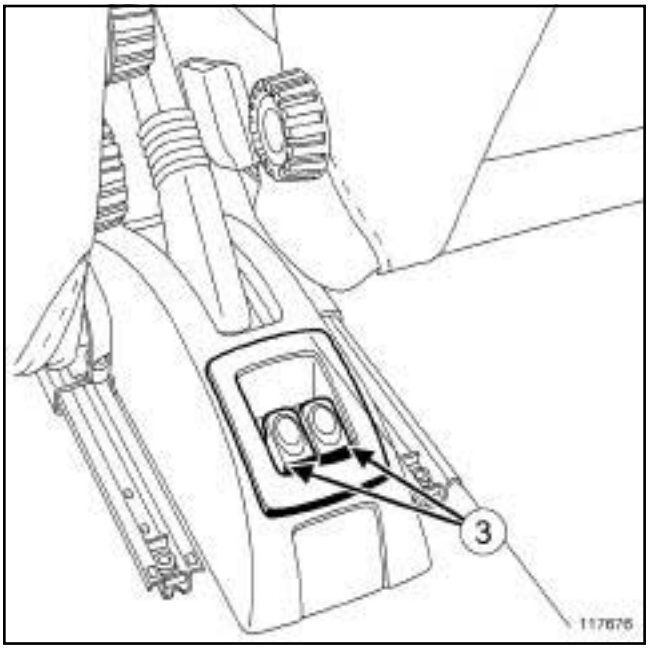

117676

Rear electric window switches (**3**)

ELECTRIC FRONT WINDOW or FRONT ONE-TOUCH ELECTRIC WINDOW

REMOVAL

I - REMOVAL PREPARATION OPERATION

❑ Remove the radio (see **86A**, **Radio**, **Radio: Removal - Refitting**, page **86A-3**) .

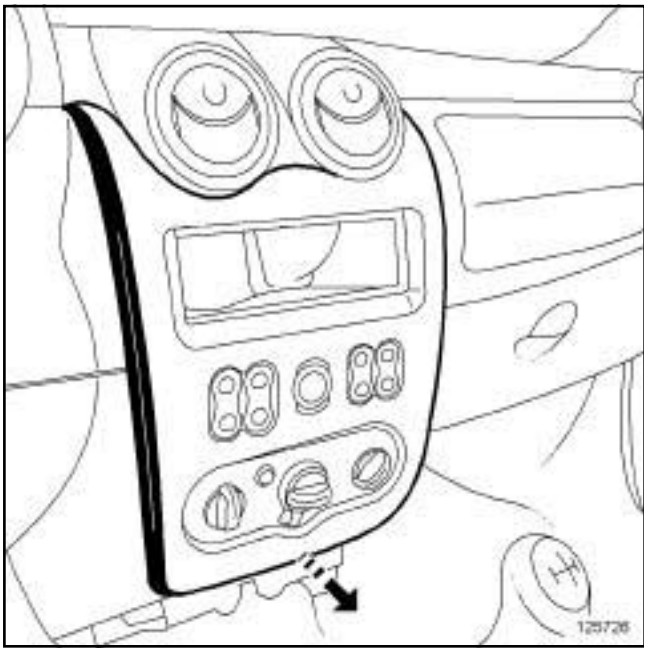

125726

❑ Unclip the central trim assembly, starting at the bottom.

II - OPERATION FOR REMOVAL OF PART CONCERNED

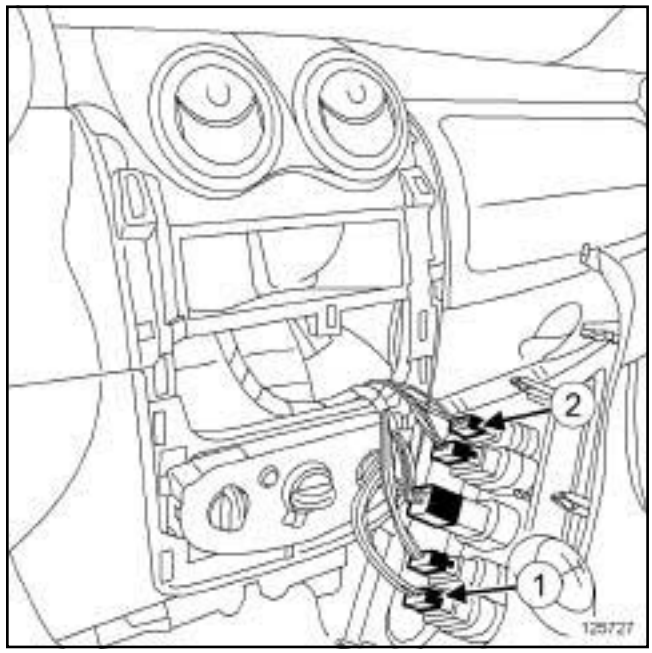

125727

❑ Disconnect the front left window winder switch connector (**1**) or the front right window winder switch connector (**2**) .

❑ Unclip the front window winder switch by pressing the clips.

REFITTING

I - REFITTING OPERATION FOR PART CONCERNED

❑ Clip on the front window winder switch.

❑ Connect the connector.

II - FINAL OPERATION

❑ Clip on the central trim assembly, starting at the top.

❑ Refit the radio (see **86A**, **Radio**, **Radio: Removal - Refitting**, page **86A-3**) .

ELECTRIC REAR WINDOW

REMOVAL

I - REMOVAL PREPARATION OPERATION

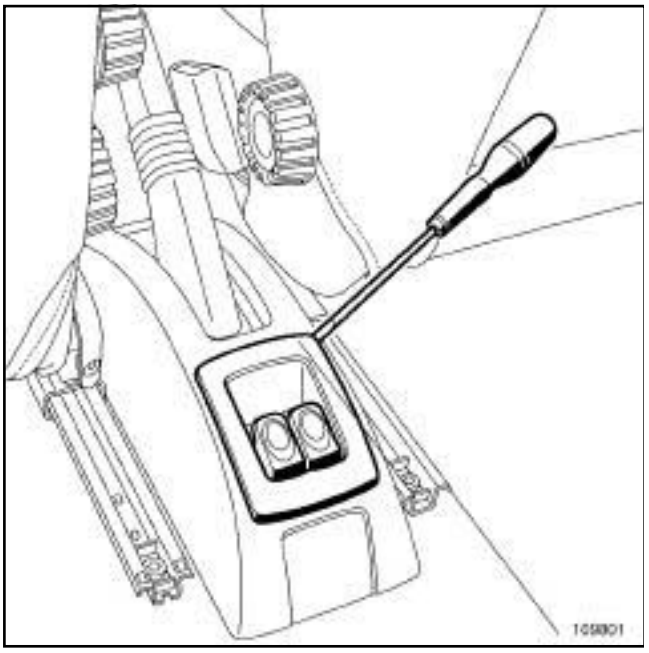

109801

❑ Unclip the rear window winder switch plate.

II - OPERATION FOR REMOVAL OF PART CONCERNED

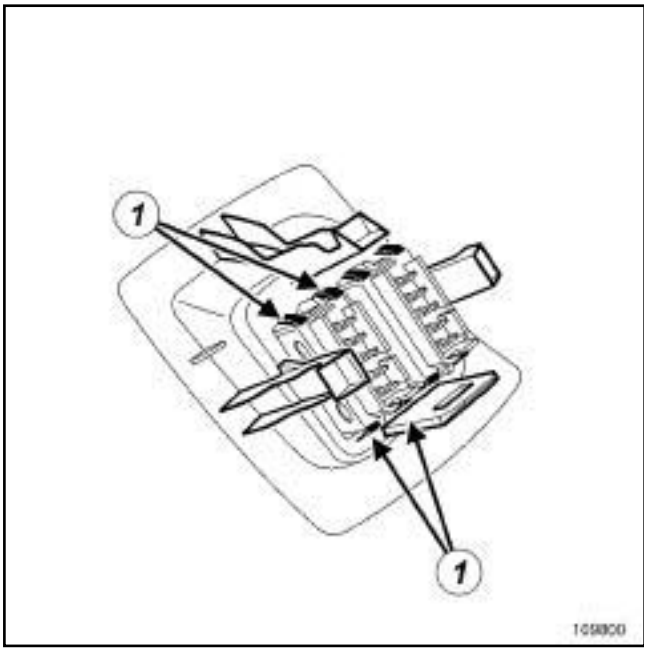

109800

❑ Disconnect the rear window winder switch connector.

❑ Unclip the rear window winder switch by pressing the clips (**1**) .

REFITTING

I - REFITTING OPERATION FOR PART CONCERNED

❑ Clip on the rear window winder switch.

❑ Reconnect the rear window winder switch connector.

II - FINAL OPERATION.

❑ Clip on the rear window winder switch plate.

I - LIST OF COMPONENTS

No.	Description
(1)	New engine compartment connection unit
(2)	Old engine compartment connection unit

II - LOCATION OF COMPONENTS

1 - NEW ENGINE COMPARTMENT FUSE AND RELAY BOX

Vehicles concerned:

B90 or F90 or K90 or U90 - L90, with a sales release date after 17/05/2005

H79

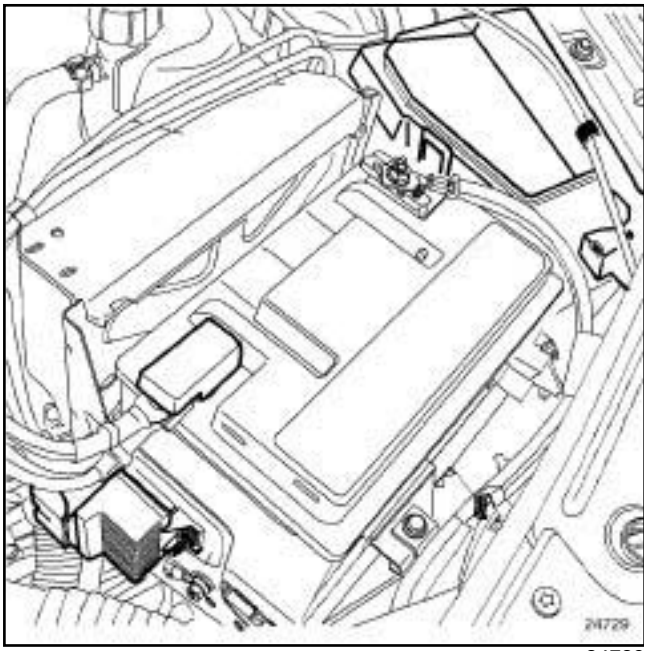

24729

Unclip the cover to access the engine compartment connection unit.

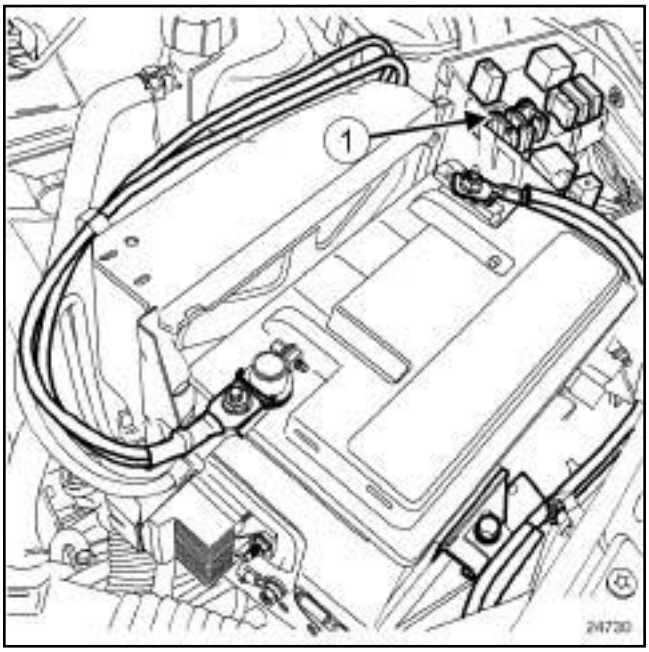

24730

Engine compartment connection unit (**1**)

2 - OLD ENGINE COMPARTMENT FUSE AND RELAY BOX

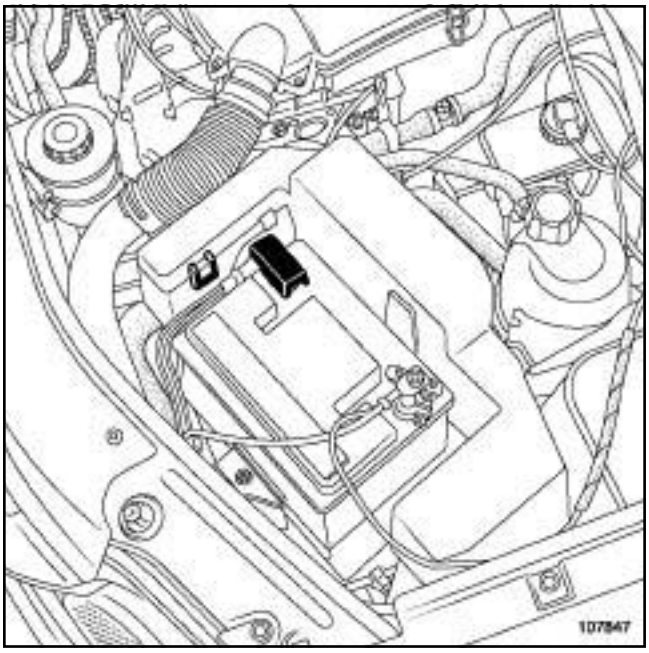

107847

Unclip the cover to access the engine compartment connection unit.

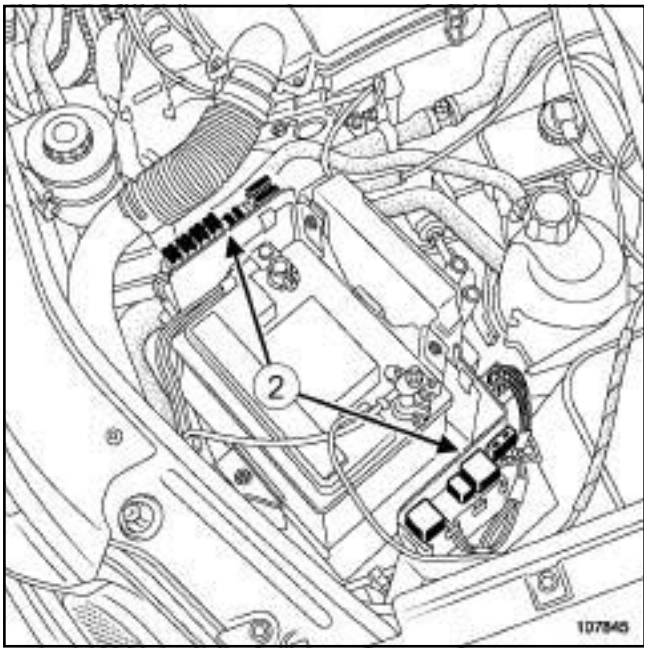

107845

Engine compartment connection unit (**2**)

No.	Description	Procedure
1	Passenger compartment fuse box	
2	UCH	(see **87B**, **Passenger compartment connection unit**, **UCH: Removal - Refitting**, page **87B-1**) (13B, Diesel injection)
3	Engine compartment fuse and relay box	
4	ABS-ESP computer	
5	Airbag computer	(see **88C**, **Air bag and Pretensioners**, **Airbag computer: Removal - Refitting**, page **88C-4**)
6	Radio	(see **86A**, **Radio**, **Radio: Removal - Refitting**, page **86A-3**)
7	Injection computer	(see **Diesel injection computer: Removal - Refitting**)

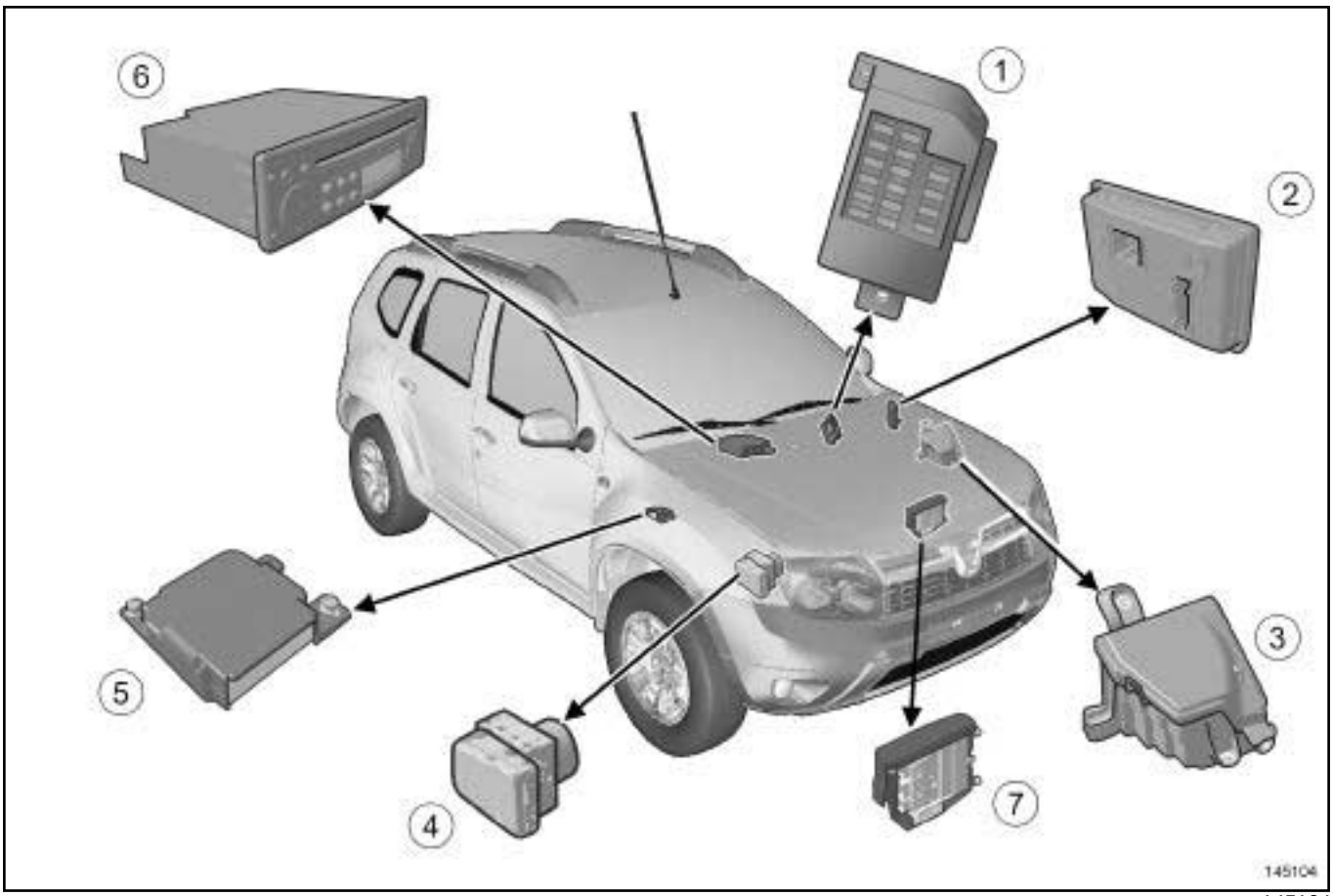

145104

I - LIST OF COMPONENTS

Mark	Description
(1)	Diagnostic socket

II - LOCATION OF COMPONENTS

DIAGNOSTIC SOCKET

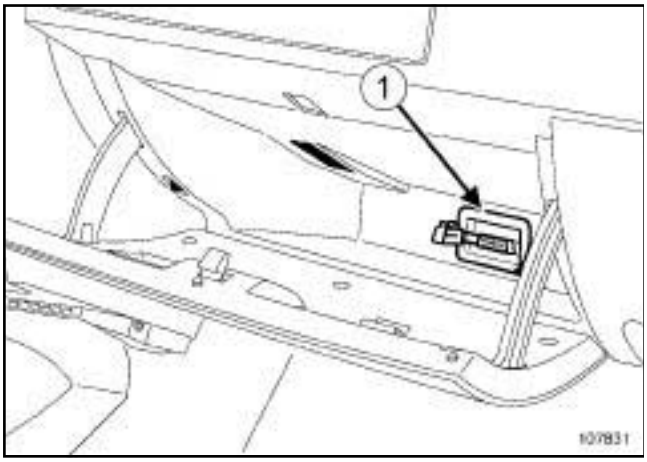

107831

The diagnostic socket (**1**) is located in the glovebox.

I - SAFETY

1 - Potentially dangerous components

Do not leave any unused +12V connectors exposed to the air without any protection (see **Connector: Sealing and locking**) (Technical Note 6015A, 88A, Wiring).

Check that there is no contact between the wiring and the fuel and brake pipes.

Avoid mounting the wiring in areas with a temperature above 100˚C.

2 - Advice to be followed before any operation

Before carrying out any work on the wiring, disconnect the battery.

WARNING
To prevent damaging the connectors, consult the disconnection procedure (see **Connector: Disconnection and reconnection**) (Technical Note 6015A, 88A, Wiring).

WARNING
To prevent any risk of noise, premature wear, short circuits, etc. after the refitting operation, mark the wiring routing and how to connect the connectors.

3 - Instructions to be followed during the operation

WARNING
To prevent any damage during the removal operation, check that the wiring is free from its mountings (retaining clip, plastic clip, adhesive tape, connector, etc.).

To prevent the wiring from being damaged, check that the surrounding area is not mechanically harmful (e.g.: door windows, sharp corners, burrs, studs, etc.).

The wiring should be **at least 30 mm** away from any moving components (belt, pulley, steering column, etc.).

Depending on the surrounding area, check that the unused connectors respect the necessary sealing constraints (see **Connector: Sealing and locking**) (Technical Note 6015A, 88A, Wiring).

All of the connections (connectors) used in the engine compartment are sealed; do not remove the seal from around the connectors.

II - GENERAL RECOMMENDATIONS

Do not connect an earth to a stud with insulating protection (paint,etc.).

Do not use more than two earth terminals on the same point.

Do not use power earths on the same point as electronic earths.

To prevent water flowing into the connectors, make a low point just on the wiring routing (just before the connector).

For connections between fixed and mobile components, secure the wiring on the fixed part.

Overlapping of the battery feed wires (positive and negative) causes disruption; they must be secured separately.

Wiring mountings:

- use plastic clips, ensuring that the colour coding is respected,

-do not use steel clips that are not protected with rubber,

- keep the clips integrated into the wiring during a replacement operation,

- do not leave steering wheel wires without protection.

Check that:

- the shunts are correctly secured,

- the connectors are correctly housed and locked.

Wiring routing:

- when it is visible it must be aesthetically pleasing, and resemble the routing marked during removal,

- prohibit wiring routing in grooves and overlaps (risk of wear through friction),

- prohibit mounting several wires on the same clip,

- do not lock the connectors or wiring in areas that are sensitive to drilling (number plate etc.).

IMPORTANT
To avoid all risk of damage to the systems, apply the safety and cleanliness instructions and operation recommendations before carrying out any repair (see **88A**, **Wiring harness**, **Wiring: Precautions for the repair**, page **88A-3**) .

WARNING
To avoid damaging the connectors, consult the disconnection procedures (see **Connector: Disconnection and reconnection**) (Technical Note 6015A, 88A, Wiring).

REMOVAL

I - REMOVAL PREPARATION OPERATION

❑ Position the vehicle on a two-post lift (see **Vehicle: Towing and lifting**) (02A, Lifting equipment).

❑ Switch off the ignition.

❑ Disconnect the battery (see **80A**, **Battery**, **Battery: Removal - Refitting**, page **80A-2**) .

❑ Remove the front bumper (see **Front bumper assembly: Exploded view**) (55A, Exterior protection).

II - REMOVAL OPERATION

❑

WARNING
To prevent any risk of noise, premature wear, short circuits, etc. after the refitting operation, mark the wiring routing and how to connect the connectors.

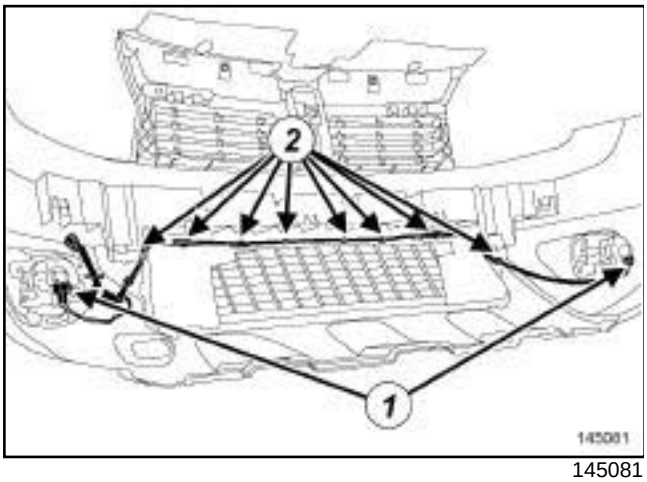

145081

❑ Disconnect the front fog light connectors (**1**) .

❑ Unclip the front bumper wiring at ***(2)*** .

WARNING
To prevent any damage during the removal operation, check that the wiring is free from its mountings (retaining clip, plastic clip, adhesive tape, connector, etc.).

❑ Remove the front bumper wiring.

REFITTING

I - REFITTING PREPARATION OPERATION

❑ If replacing with more complete wiring, immobilise the unused connectors (see **Connector: Sealing and locking**) (Technical Note 6015A, 88A, Wiring).

II - REFITTING OPERATION

❑ Proceed in the reverse order to removal.

❑ Connect the battery (see **80A**, **Battery**, **Battery: Removal - Refitting**, page **80A-2**) .

III - CHECKING AFTER REPAIR

❑ Switch on the ignition.

❑ Check the operation of all front bumper electrical components.

K4M

Equipment required
indelible pencil
Diagnostic tool

Tightening torques ▽	
manual gearbox earth cable bolt	**24 N.m**
earth cable nuts	**8 N.m**

IMPORTANT

To avoid all risk of damage to the systems, apply the safety and cleanliness instructions and operation recommendations before carrying out any repair:

- (See **Wiring: Precautions for repair**) (88A, Wiring),
- (see **Vehide: Precautions for repair**) (01D, Mechanical introduction).

IMPORTANT

To prevent any accidental triggering during an operation on or near to a passive safety component, apply the procedure for deactivating the safety systems (see **88C**, **Air bag and Pretensioners**, **Airbag and pretensioners: Precautions for the repair**, page **88C-3**) (88C, Airbag and pretensioners)

IMPORTANT

Never handle the pyrotechnic systems (pretensioners or airbags) near to a source of heat or naked flame - they may be triggered.

WARNING

To prevent damage to the wiring harness when refitting, observe the original routing.

WARNING

To prevent any damage to the connectors, consult the disconnection procedures (see **Connectors: Disconnection and reconnection**) (Technical Note 6015A, 88A, Wiring).

Note:

For information on instrument connectors (see **Visu-Schéma**).

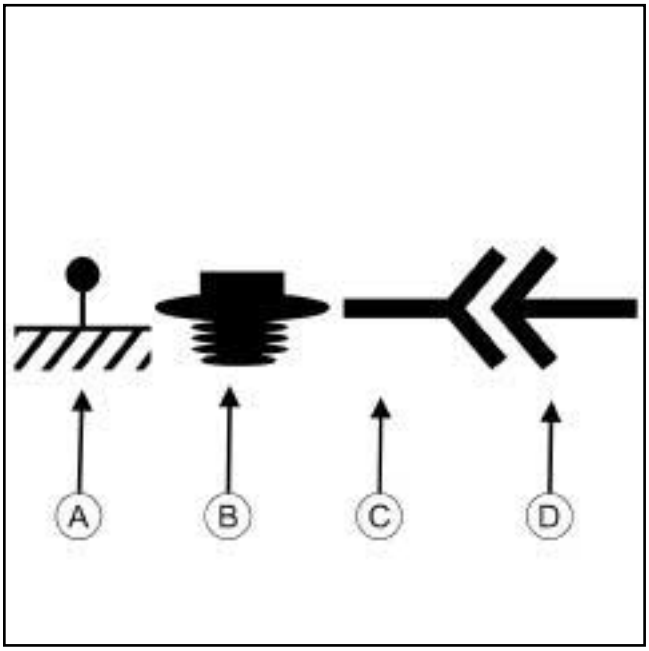

144441

(**A**)	Symbol for an earth
(**B**)	Symbol for a mounting (clip, clamp, etc.)
(**C**)	Symbol for a female connector (connection of 2 wires)
(**D**)	Symbol for a male connector (connection of 2 wires)

REMOVAL

I - REMOVAL PREPARATION OPERATION

❑ Position the vehicle on a two-post lift (see **Vehicle: Towing and lifting**) (02A, Lifting equipment).

❑ Switch off the ignition.

❑ Disconnect the battery (see **80A**, **Battery**, **Battery: Removal - Refitting**, page **80A-2**) (80A, Battery).

K4M

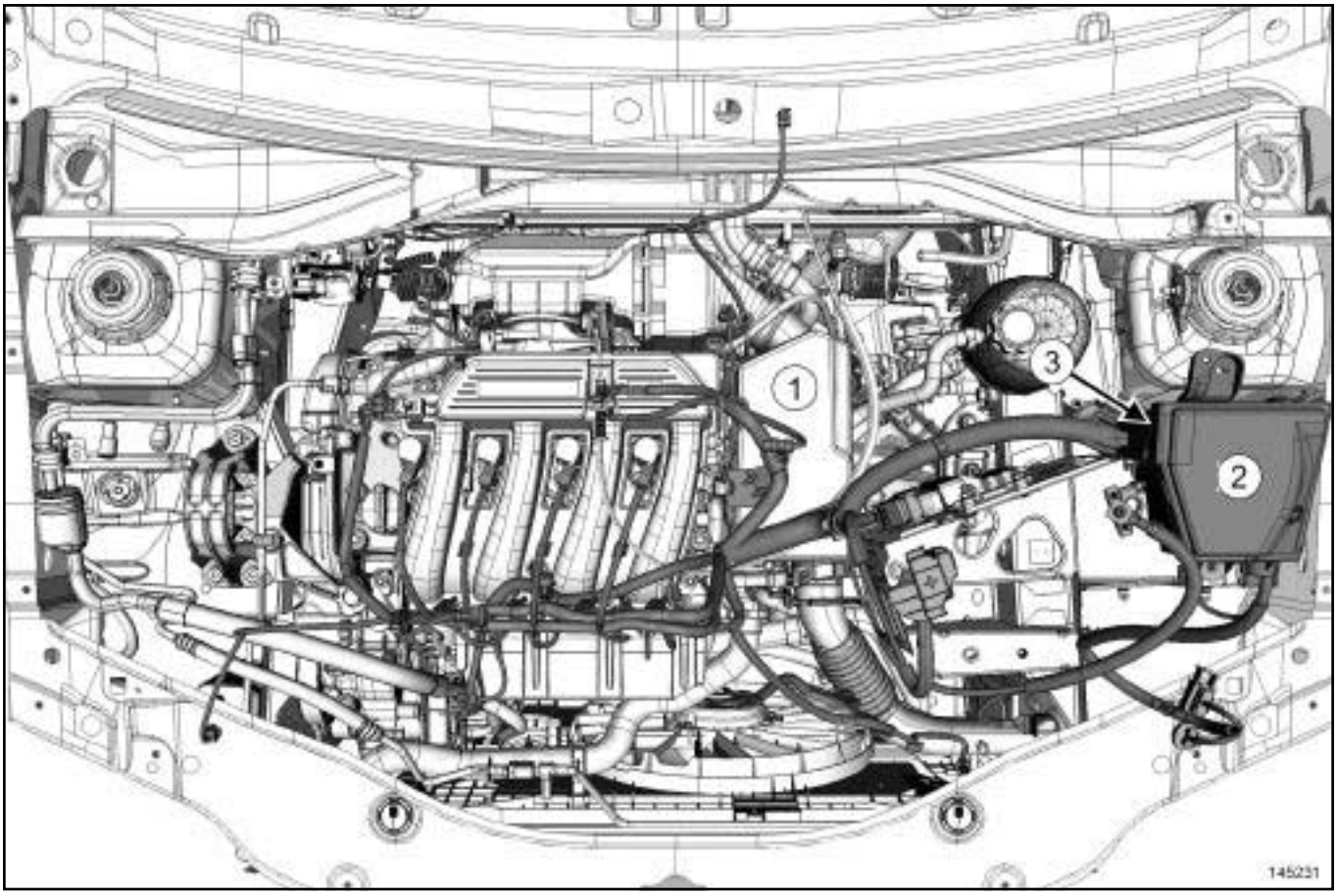

145231

❑ Remove:

- the air resonator (**1**) (see **Air resonator: Removal - Refitting**) (12A, Fuel mixture),
- the cover to access the engine compartment fuse and relay box (**2**) ,
- the closure component (**3**) of the engine compartment fuse and relay box,
- the engine undertray bolts,
- the engine undertray.

> Note:
>
> Mark the position of the fuses and relays before removal.

❑ Unclip the fuse holders and the engine harness relays from their mountings.

If replacing the engine wiring

❑ Remove the fuses.

K4M

II - REMOVAL OPERATION

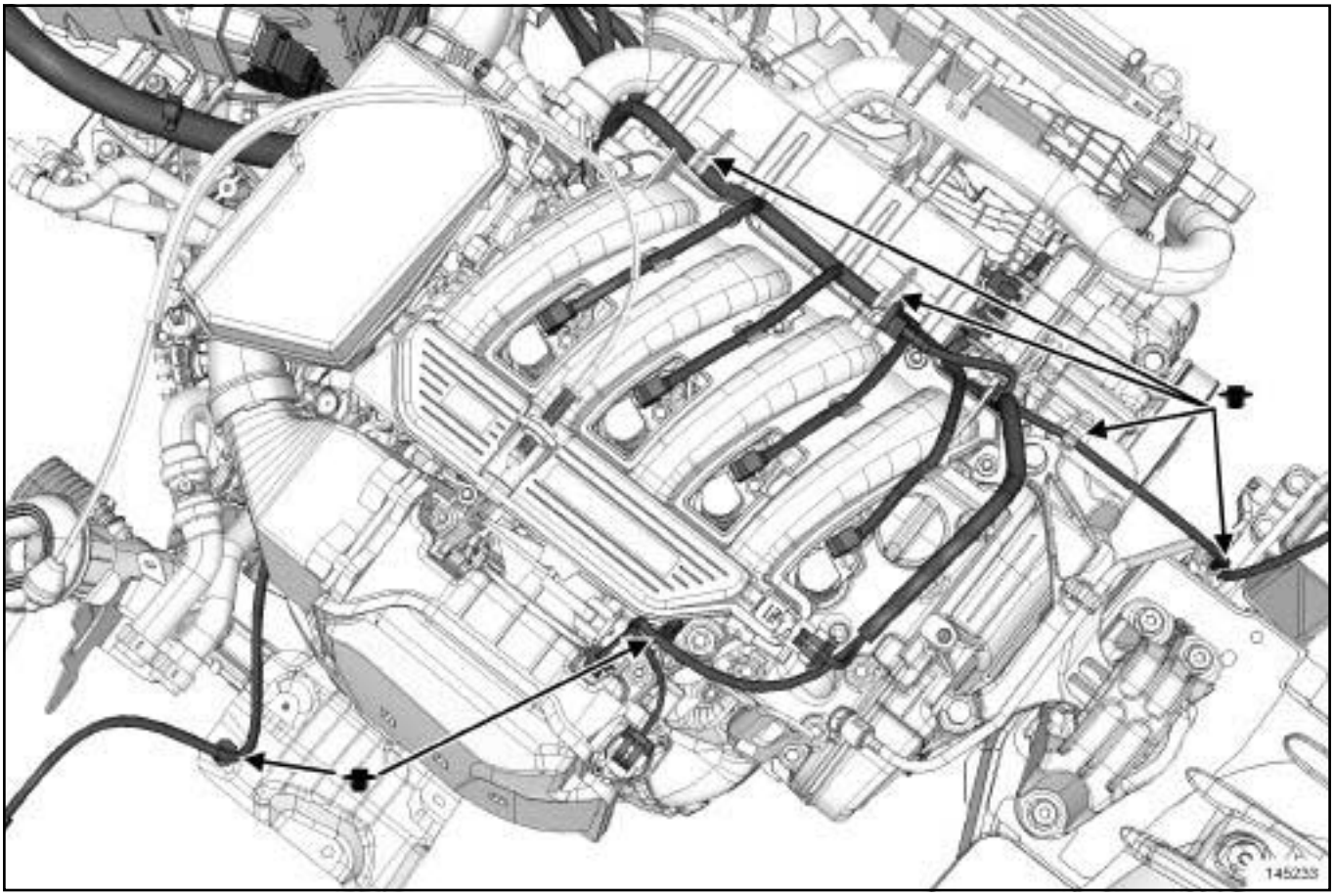

145233

K4M

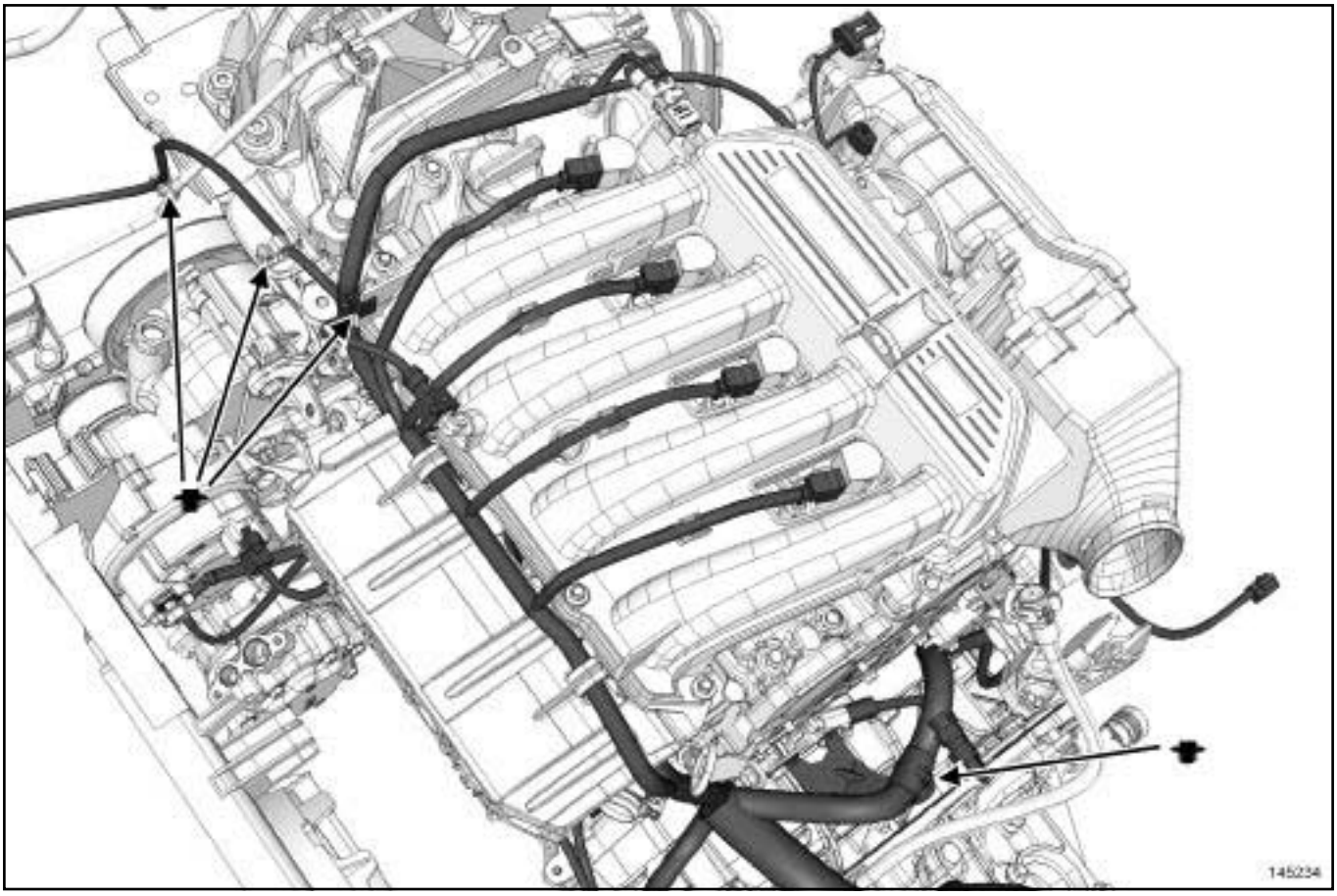

145234

K4M

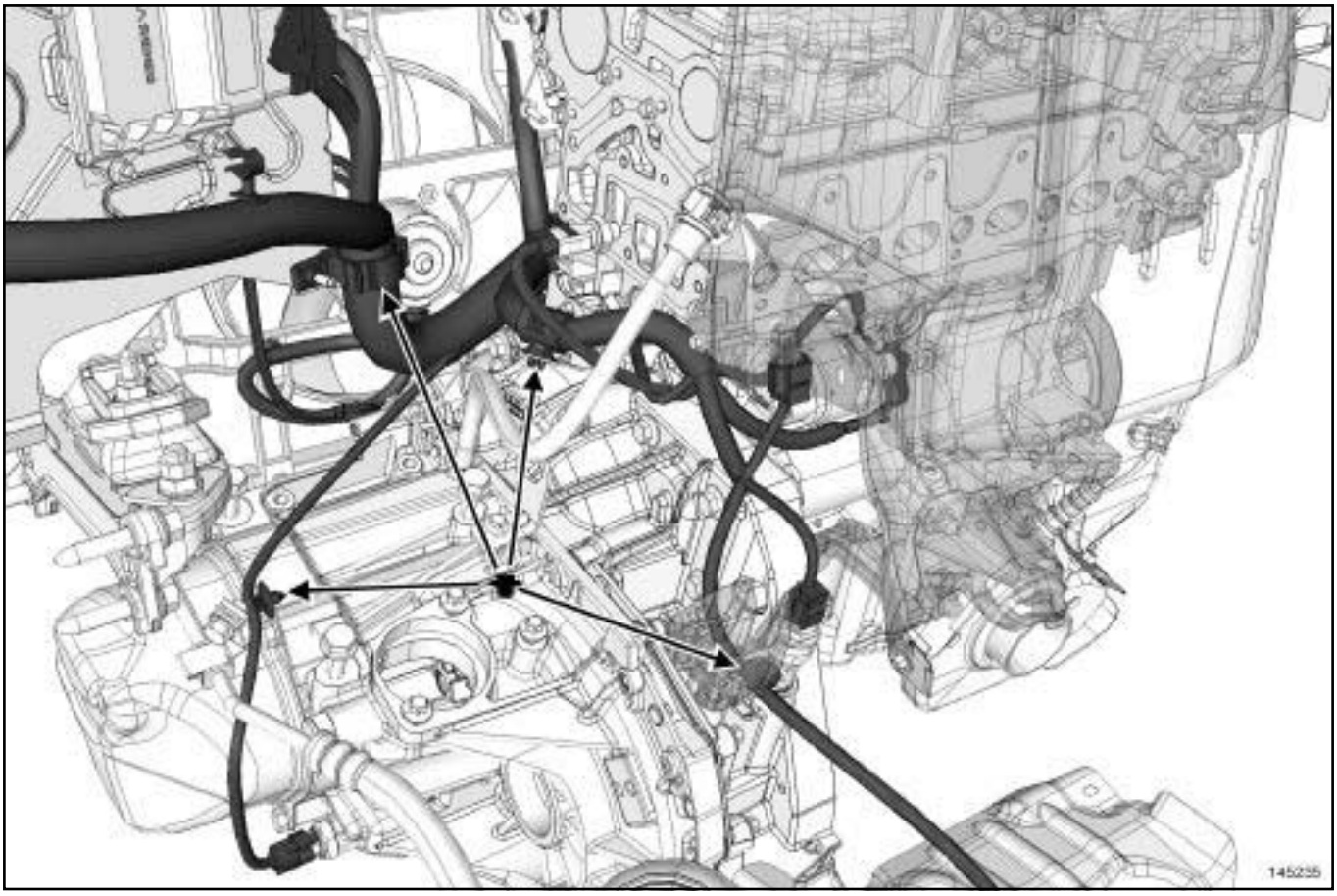

145235

- ❑ Disconnect all the connectors.
- ❑ Unclip the engine wiring where indicated.

K4M

STANDARD HEATING RECIRCULATION

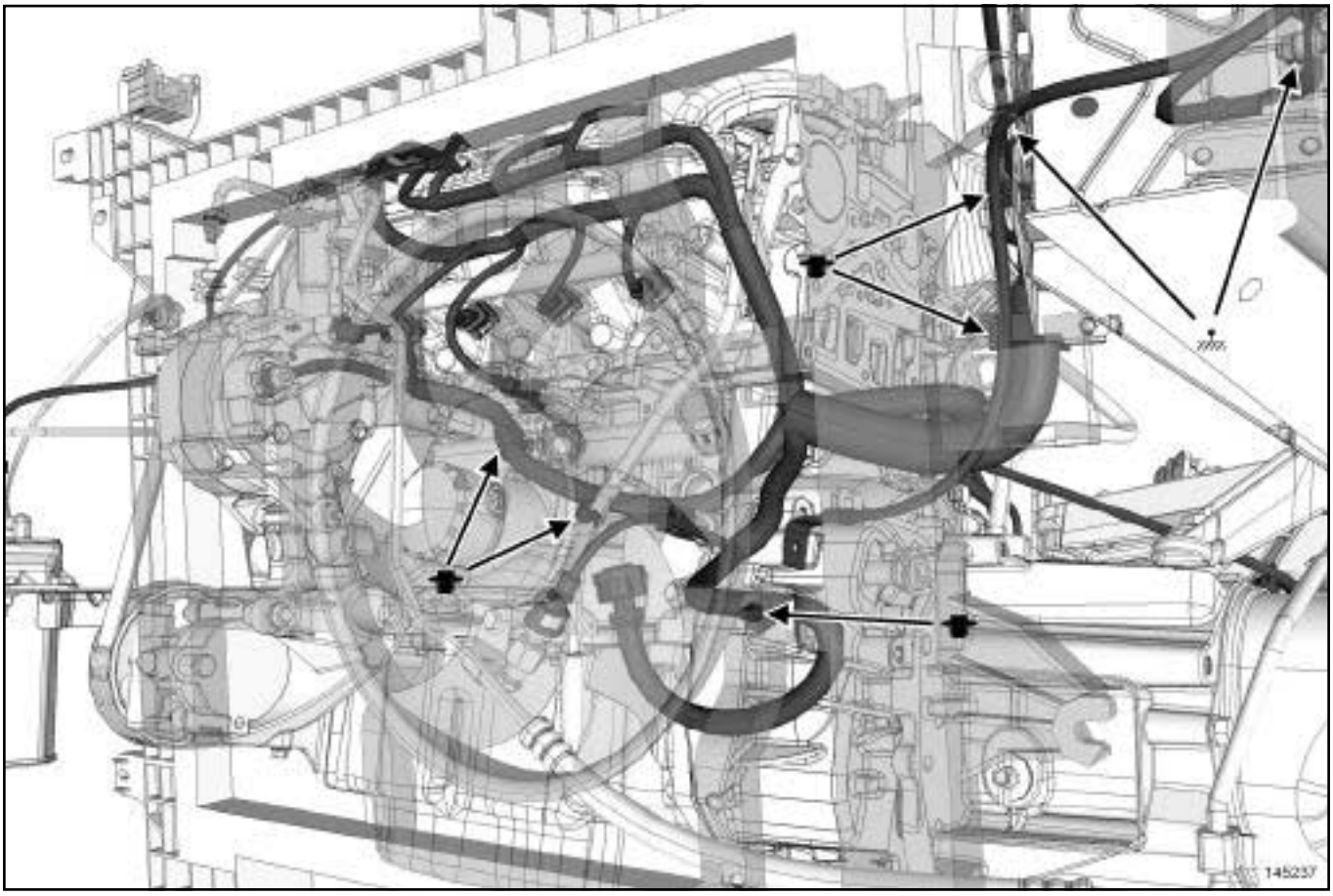

145237

- ❑ Disconnect all the connectors.
- ❑ Unclip the engine wiring where indicated.

K4M

AIR CONDITIONING

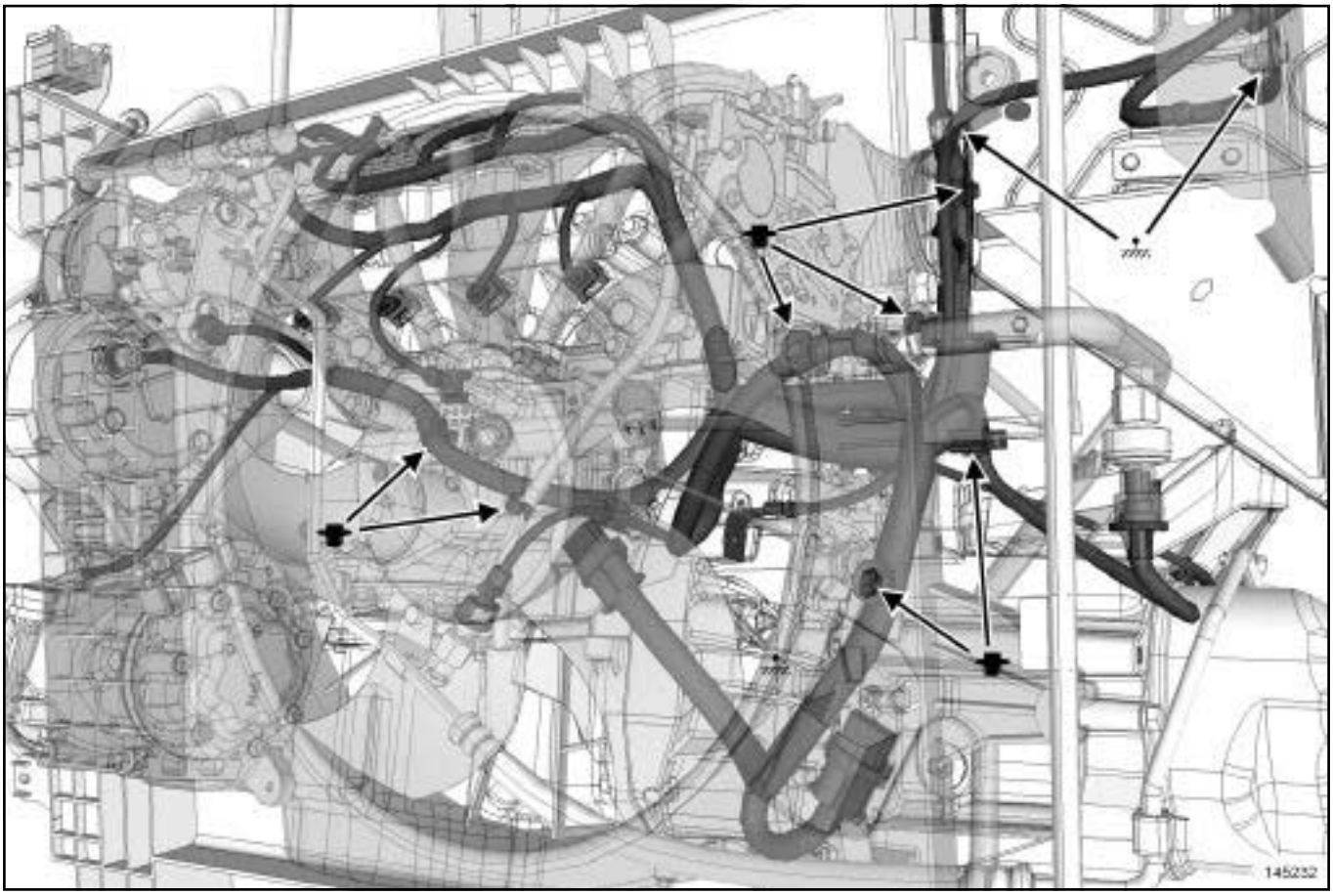

145232

❑ Disconnect all the connectors.

❑ Unclip the engine wiring where indicated.

❑

Note:

Before removing the earth terminal, mark its position using a **indelible pencil** by drawing a line on the earth terminal and on the gearbox casing.

When reassembling, improper positioning of the earth terminal on the gearbox casing could result in damage to the earth terminal or earth wiring.

❑ Remove the earth terminals.

WARNING

To prevent any damage during the removal operation, check that the wiring is free from its mountings (retaining clip, plastic clip, adhesive tape, connector, etc.).

❑ Remove the engine wiring.

K4M

REFITTING

I - REFITTING PREPARATION OPERATION

If replacing the engine wiring

❏ Refit the fuses.

❏ If replacing with a complete wiring harness, lock the unused connectors (see **Connectors: Sealing and locking**) (Technical Note 6015A, 88A, Wiring).

II - REFITTING OPERATION

❏ Proceed in the reverse order to removal.

> Note:
>
> Refit the earth terminal, aligning the indelible marks on the gearbox casing.
>
> When reassembling, improper positioning of the earth terminal on the gearbox casing could result in damage to the earth terminal or earth wiring.

❏ Torque tighten:

- the **manual gearbox earth cable bolt (24 N.m)**,
- the **earth cable nuts (8 N.m)**.

❏ Connect the battery (see **80A**, **Battery**, **Battery: Removal - Refitting**, page **80A-2**) (80A, Battery).

III - TEST OPERATION

❏ Switch on the ignition.

❏ Connect the **Diagnostic tool**.

❏ Check that there are no faults.

K9K, and 796

Equipment required
indelible pencil
Diagnostic tool

Tightening torques ▽	
manual gearbox earth cable bolt	**24 N.m**
earth cable nuts	**8 N.m**

IMPORTANT

To avoid all risk of damage to the systems, apply the safety and cleanliness instructions and operation recommendations before carrying out any repair:

- (See **Wiring: Precautions for repair**) (88A, Wiring),
- (see **Vehide: Precautions for repair**) (01D, Mechanical introduction).

IMPORTANT

To prevent any accidental triggering during an operation on or near to a passive safety component, apply the procedure for deactivating the safety systems (see **88C**, **Air bag and Pretensioners**, **Airbag and pretensioners: Precautions for the repair**, page **88C-3**) (88C, Airbag and pretensioners)

IMPORTANT

Never handle the pyrotechnic systems (pretensioners or airbags) near to a source of heat or naked flame - they may be triggered.

WARNING

To prevent damage to the wiring harness when refitting, observe the original routing.

WARNING

To prevent any damage to the connectors, consult the disconnection procedures (see **Connectors: Disconnection and reconnection**) (Technical Note 6015A, 88A, Wiring).

Note:

For information on instrument connectors (see **Visu-Schéma**).

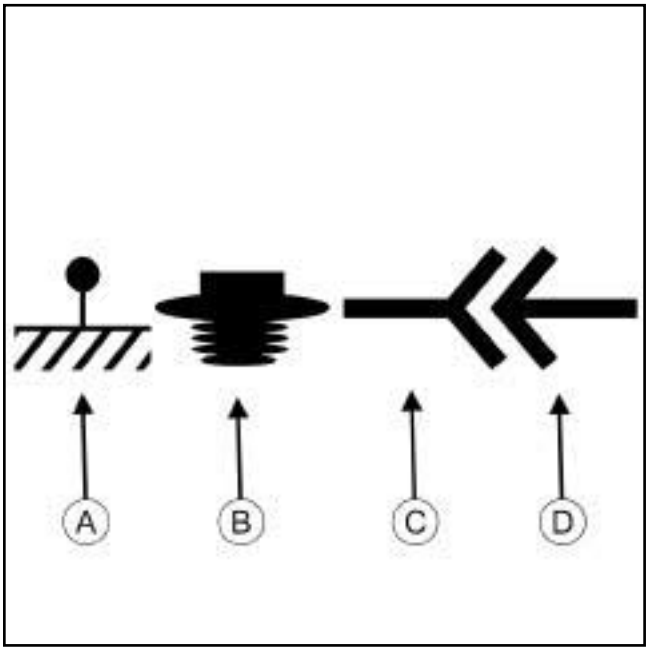

144441

(**A**)	Symbol for an earth
(**B**)	Symbol for a mounting (clip, clamp, etc.)
(**C**)	Symbol for a female connector (connection of 2 wires)
(**D**)	Symbol for a male connector (connection of 2 wires)

REMOVAL

I - REMOVAL PREPARATION OPERATION

❑ Position the vehicle on a two-post lift (see **Vehicle: Towing and lifting**) (02A, Lifting equipment).

❑ Switch off the ignition.

❑ Disconnect the battery (see **80A**, **Battery**, **Battery: Removal - Refitting**, page **80A-2**) (80A, Battery).

K9K, and 796

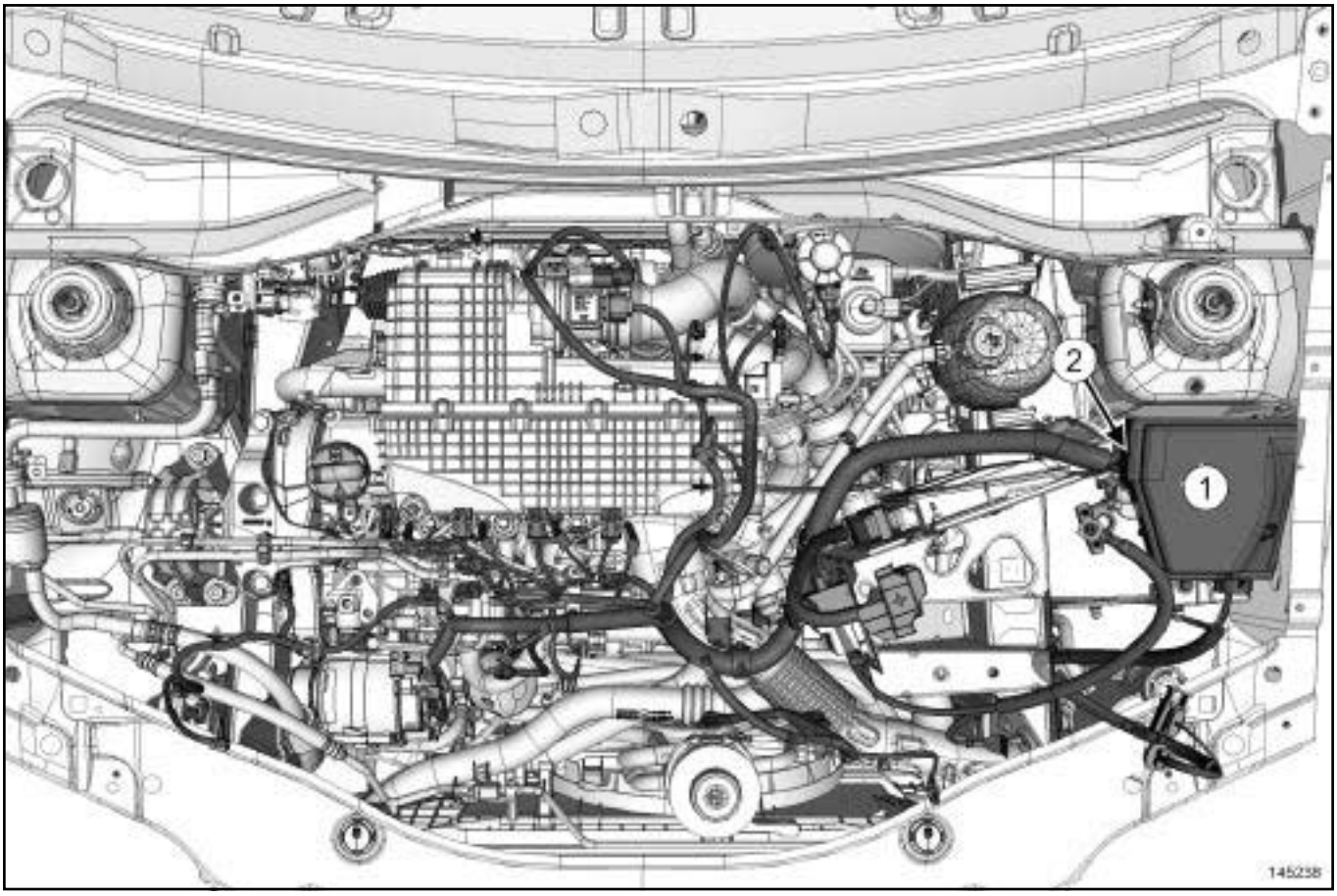

145238

❑ Remove:

- the cover to access the engine compartment fuse and relay box (**1**) ,
- the closure component (**2**) of the engine compartment fuse and relay box,
- the front bumper (see **Front bumper assembly: Exploded view**) (55A, Exterior protection),
- the right-hand headlight (see **80B**, **Headlights**, **Headlight assembly: Exploded view**, page **80B-1**) (80B, Headlights),
- the engine cover,
- the engine undertray bolts,
- the engine undertray.

> Note:
>
> Mark the position of the fuses and relays before removal.

❑ Unclip the fuse holders and the engine harness relays from their mountings.

If replacing the engine wiring

❑ Remove the fuses.

K9K, and 796

II - REMOVAL OPERATION

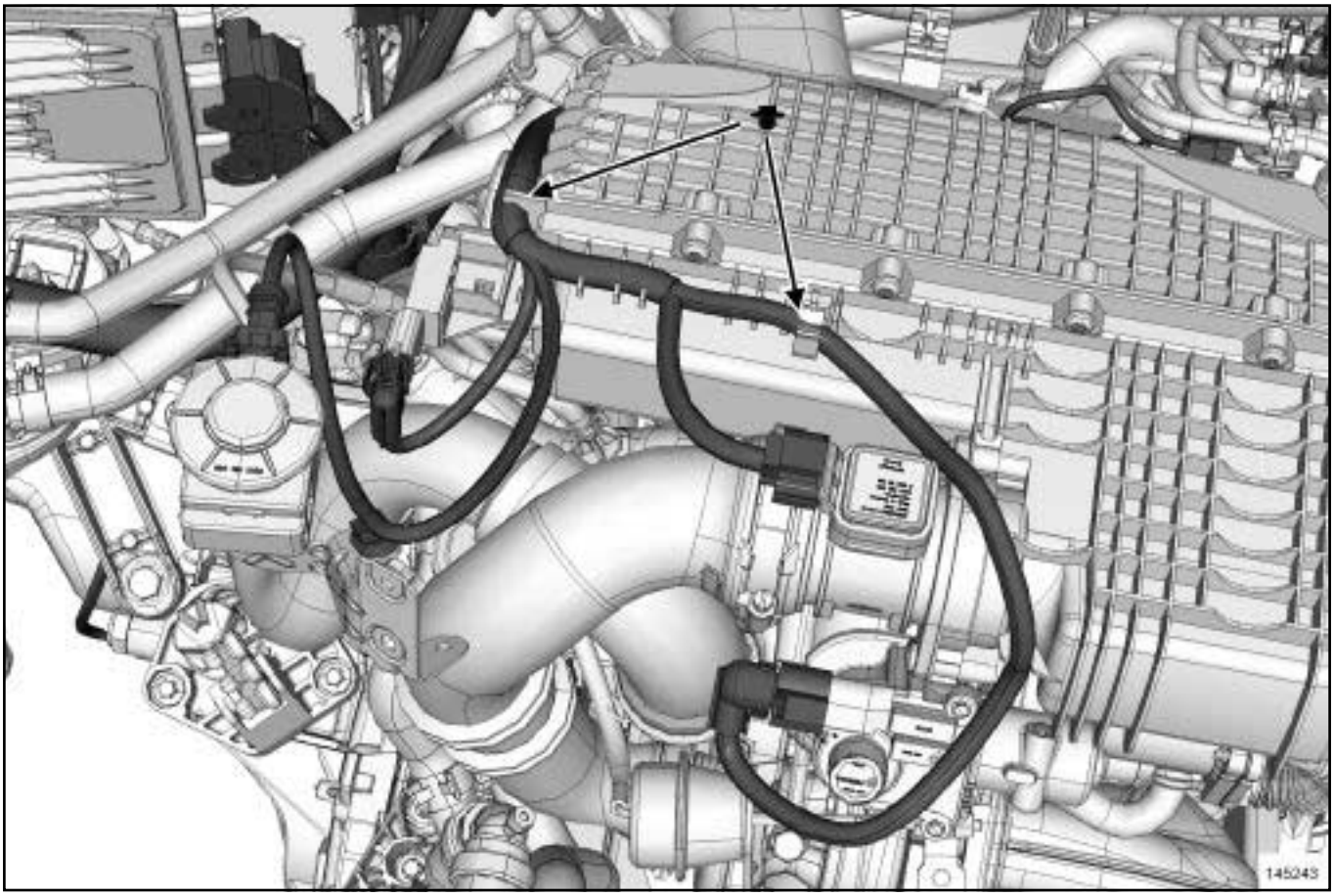

145243

- ❑ Disconnect all the connectors.
- ❑ Unclip the engine wiring where indicated.

K9K, and 796

STANDARD HEATING RECIRCULATION

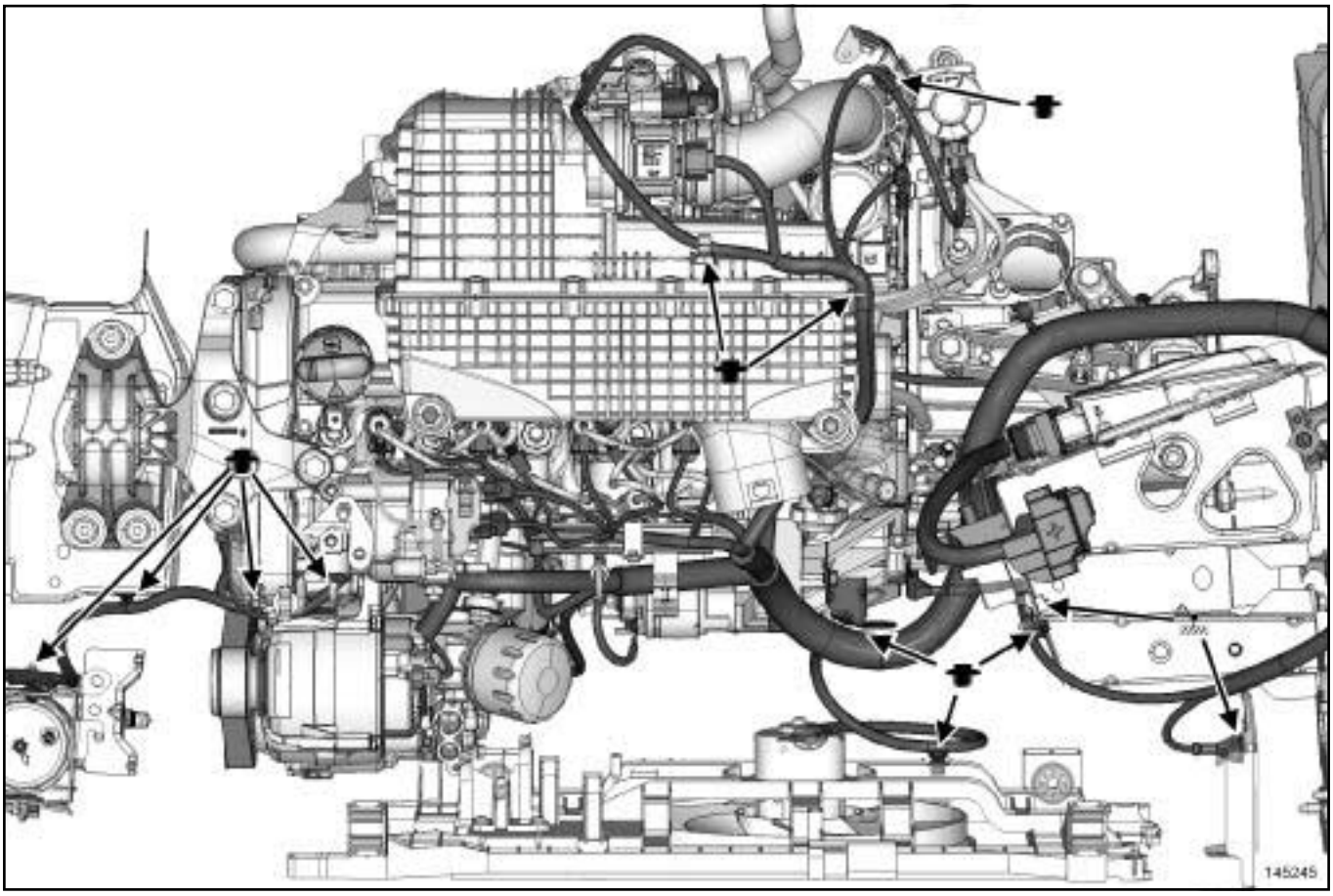

145245

K9K, and 796

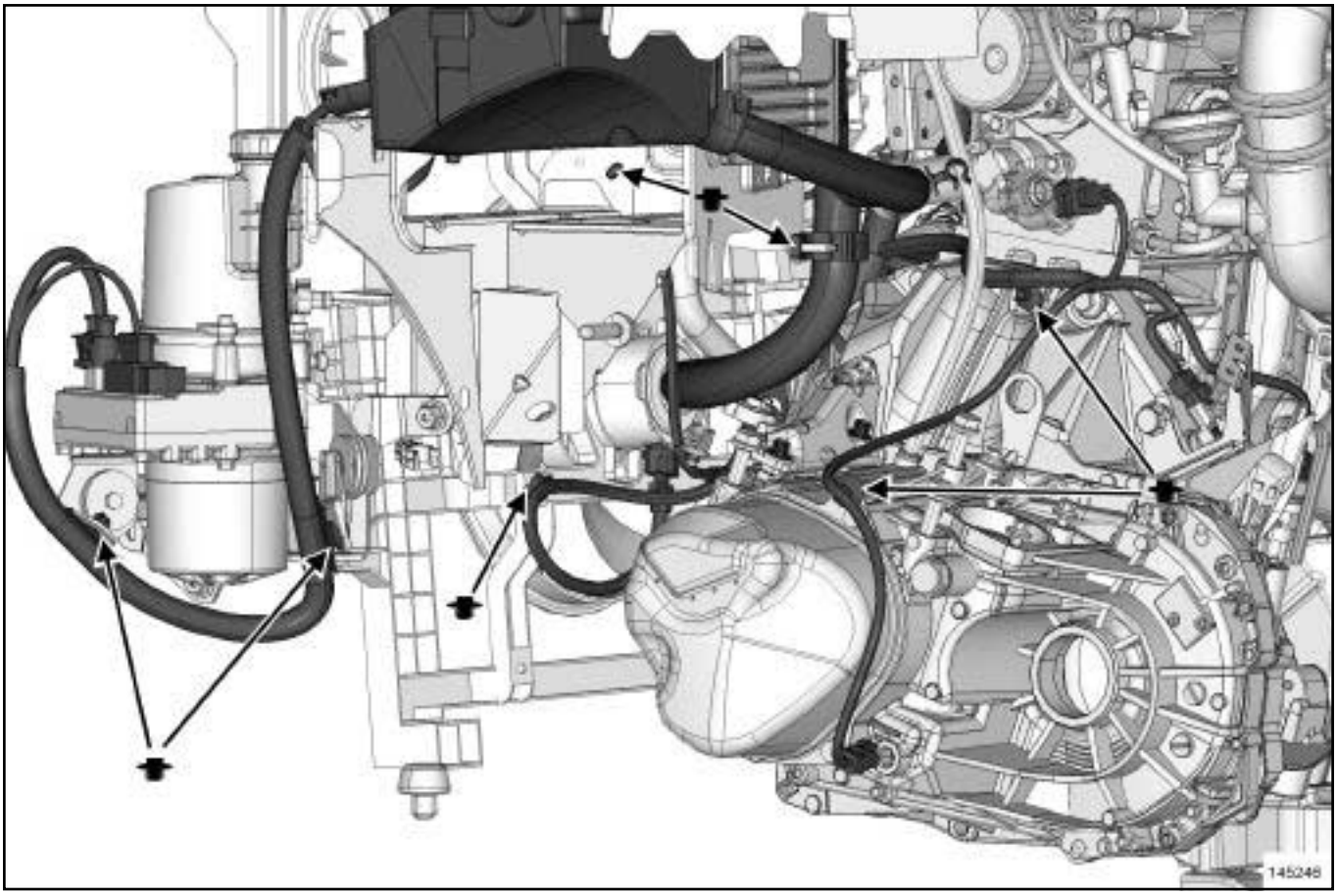

145246

K9K, and 796

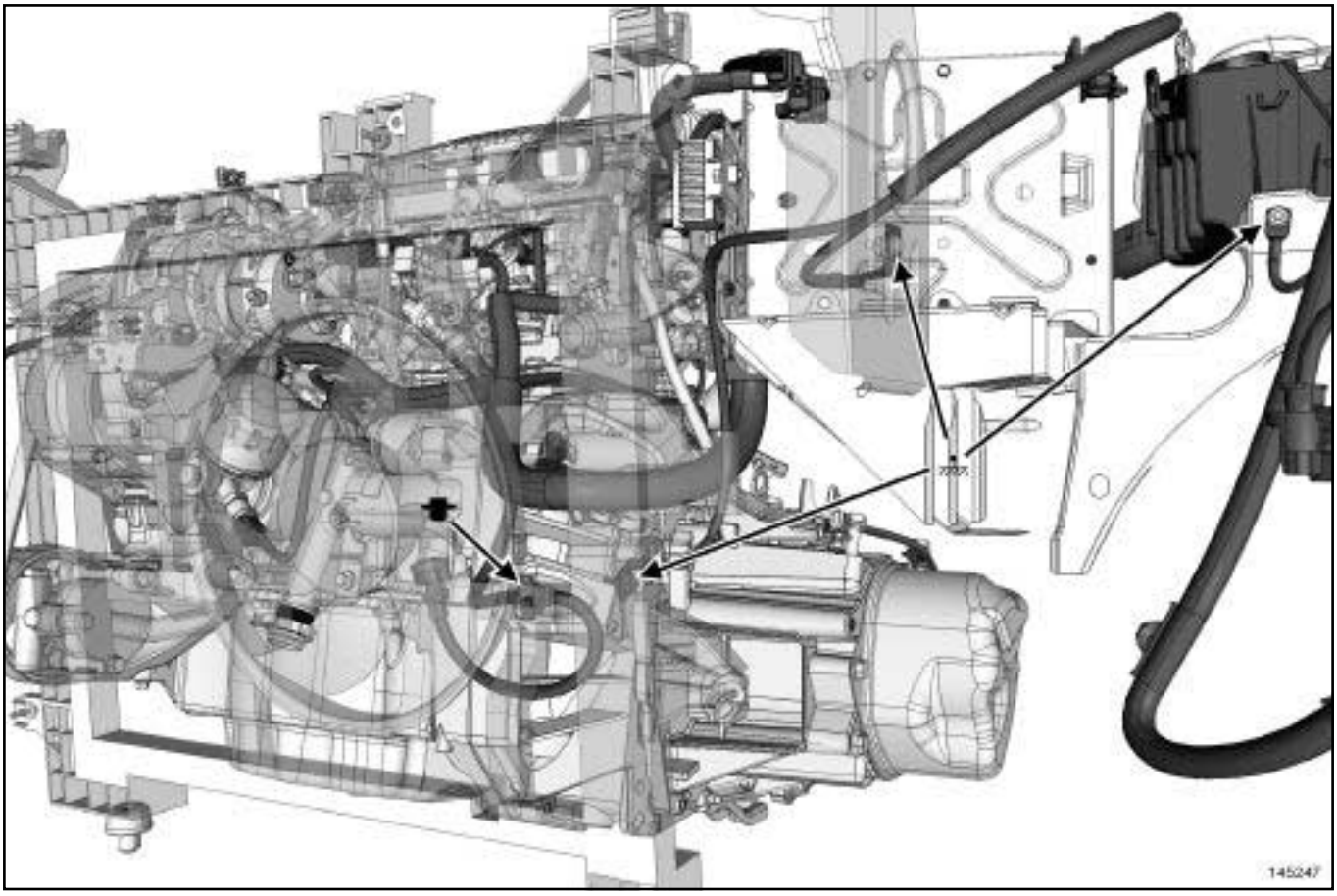

145247

K9K, and 796

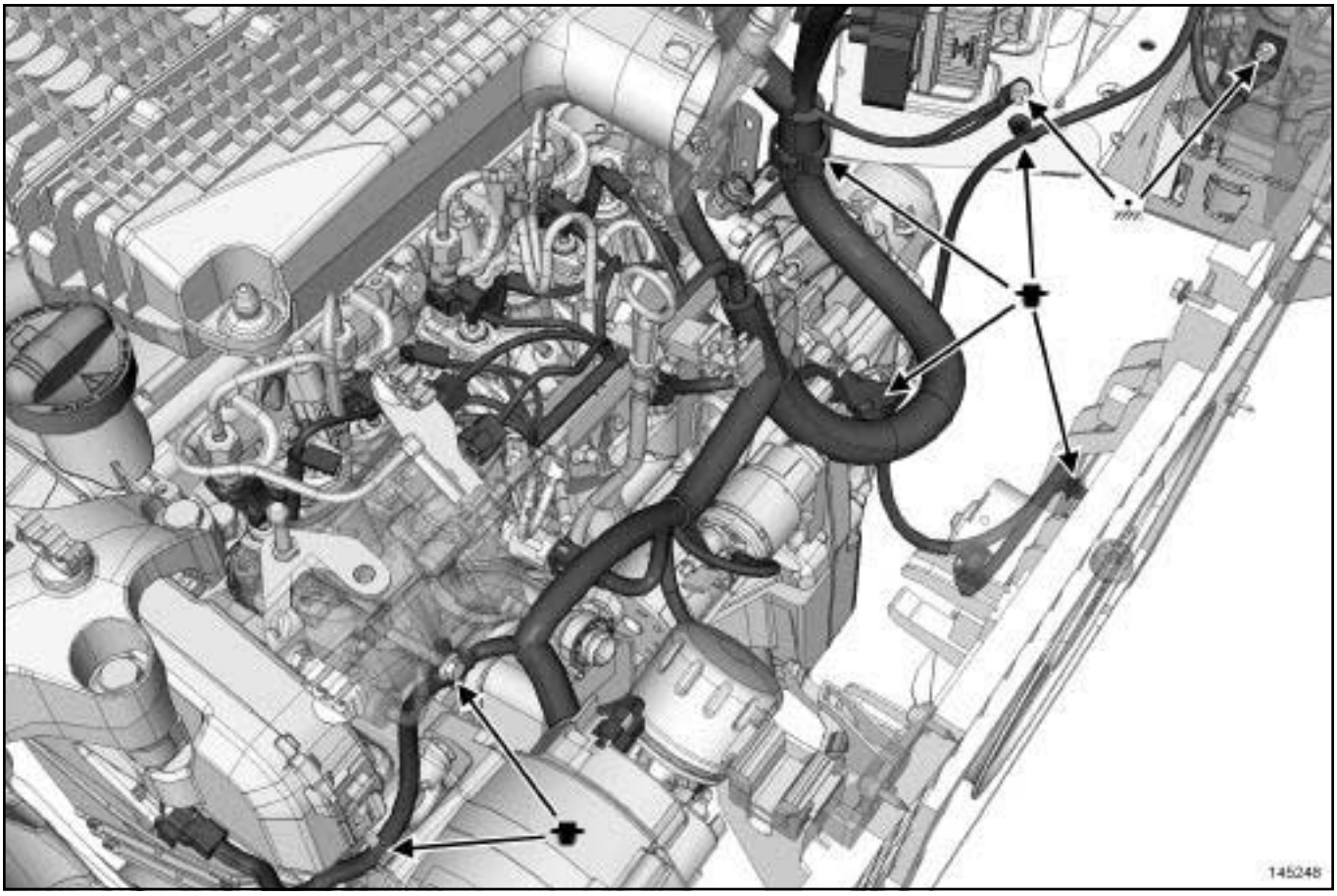

145248

- ❑ Disconnect all the connectors.
- ❑ Unclip the engine wiring where indicated.

K9K, and 796

AIR CONDITIONING

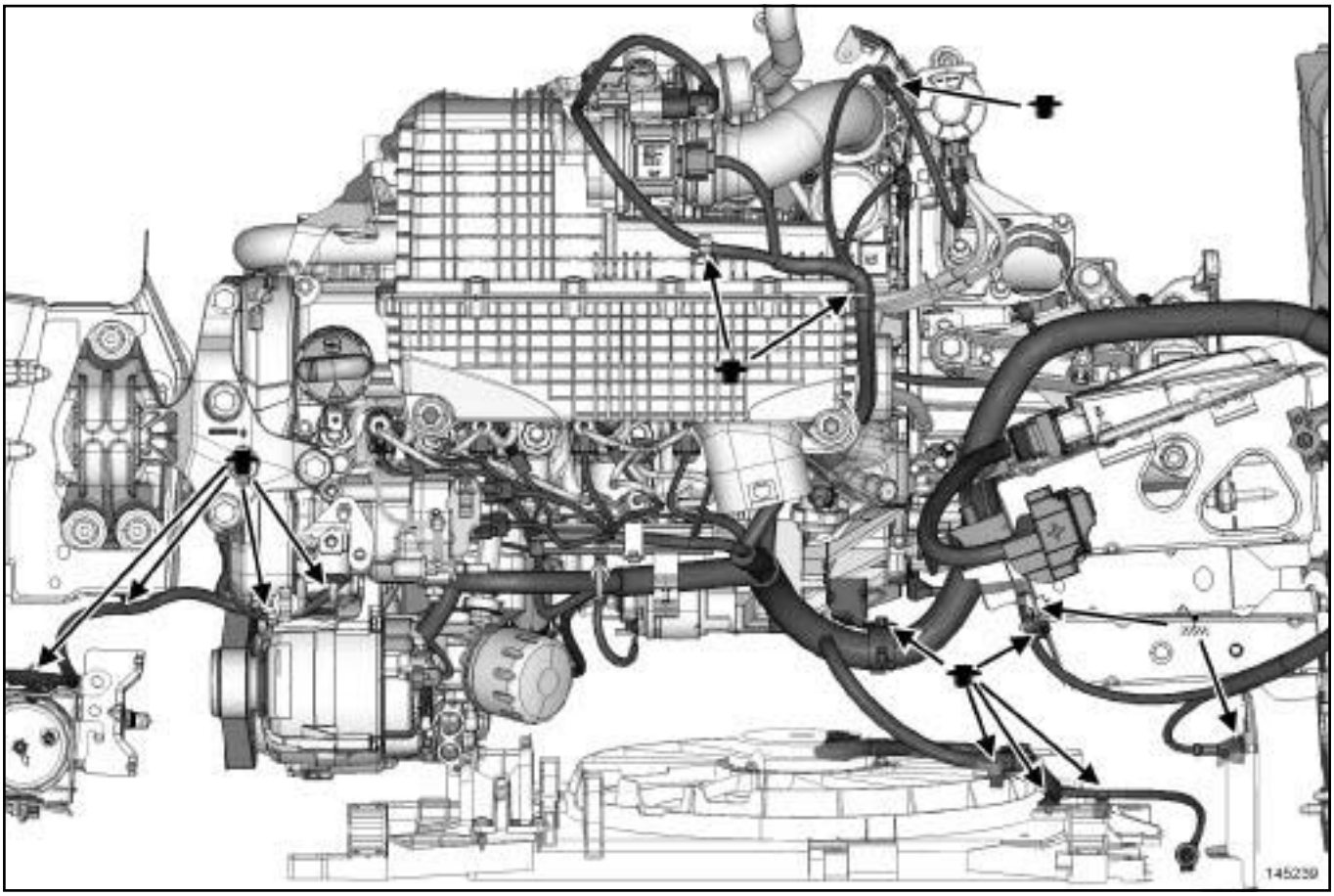

145239

K9K, and 796

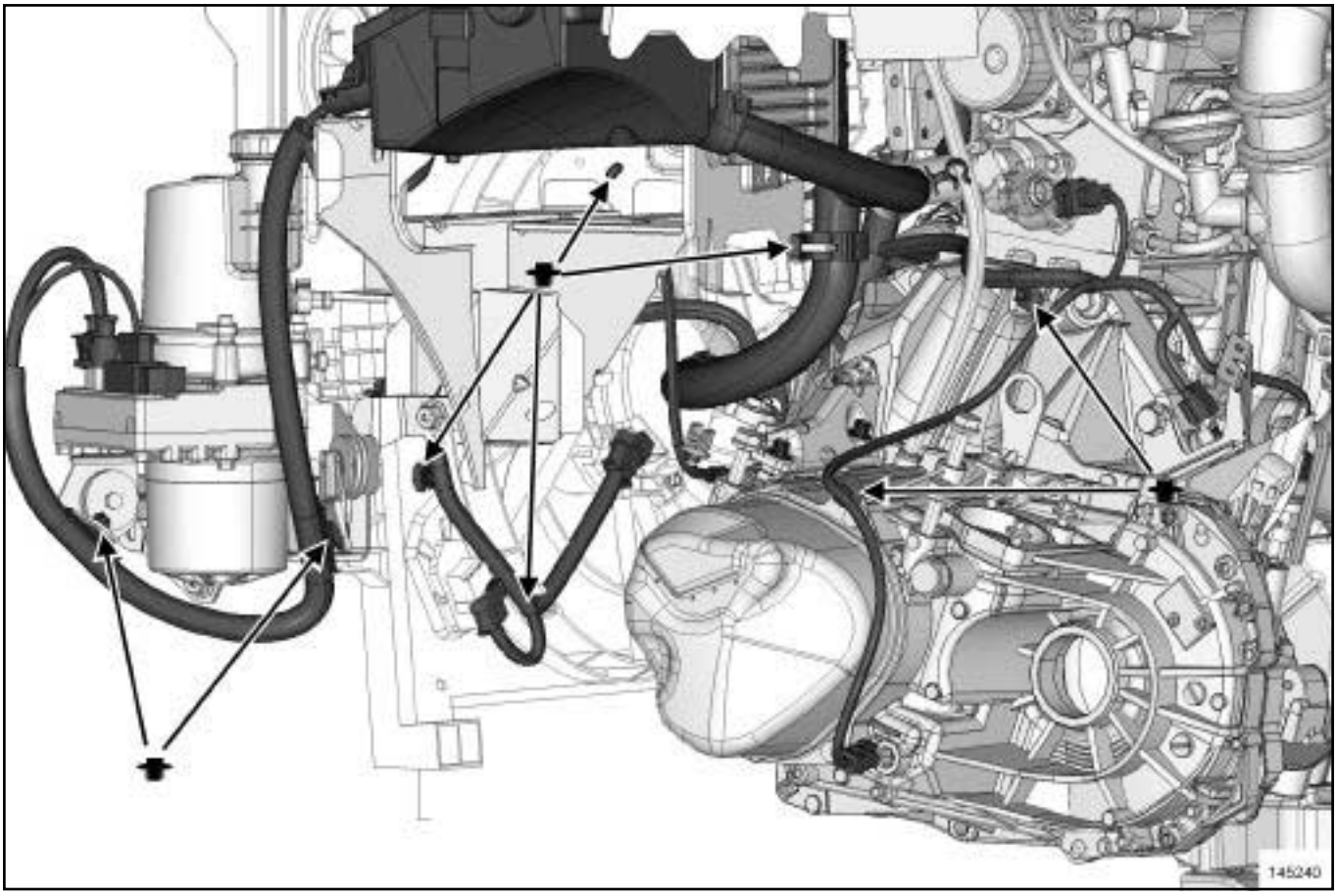

145240

K9K, and 796

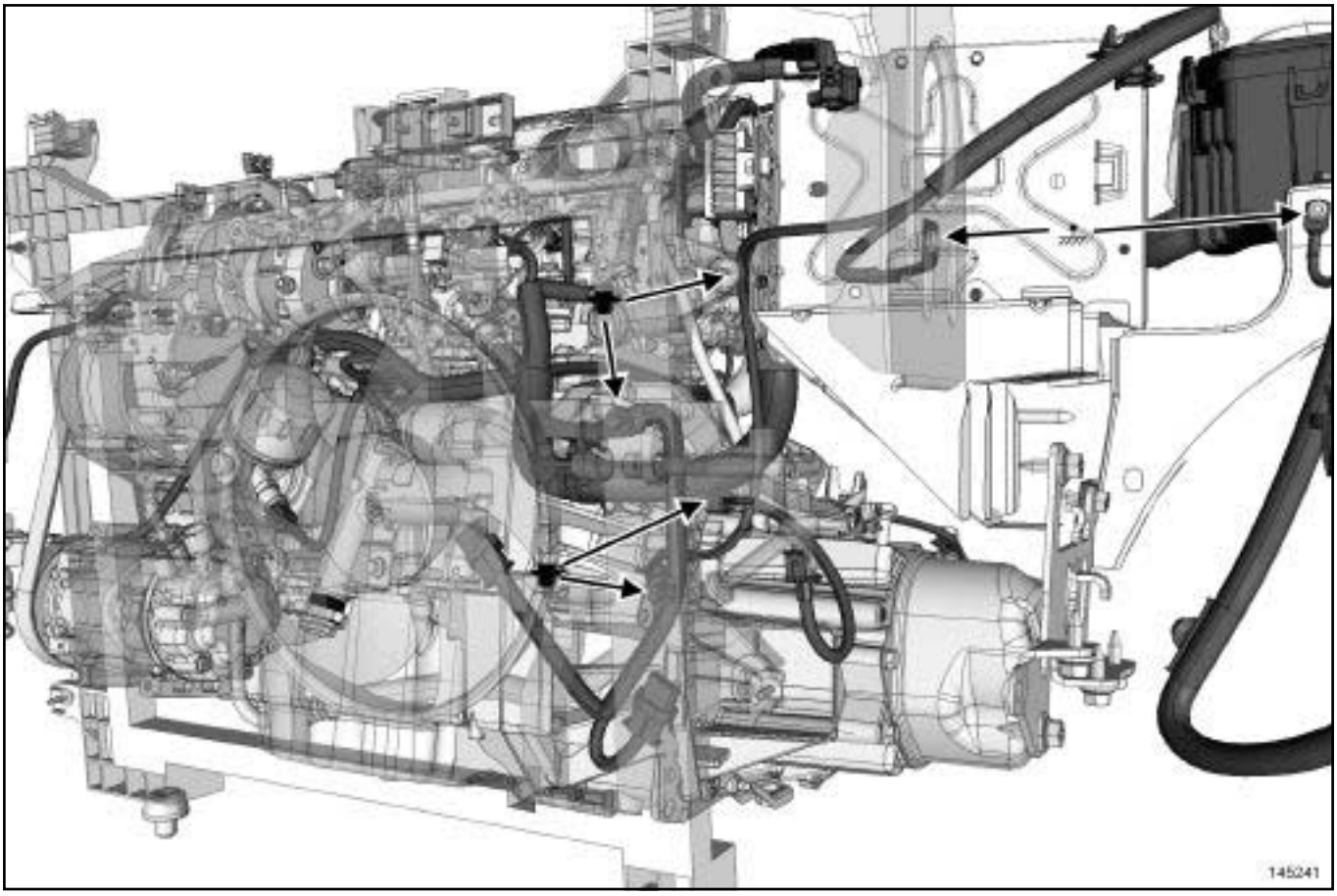

145241

K9K, and 796

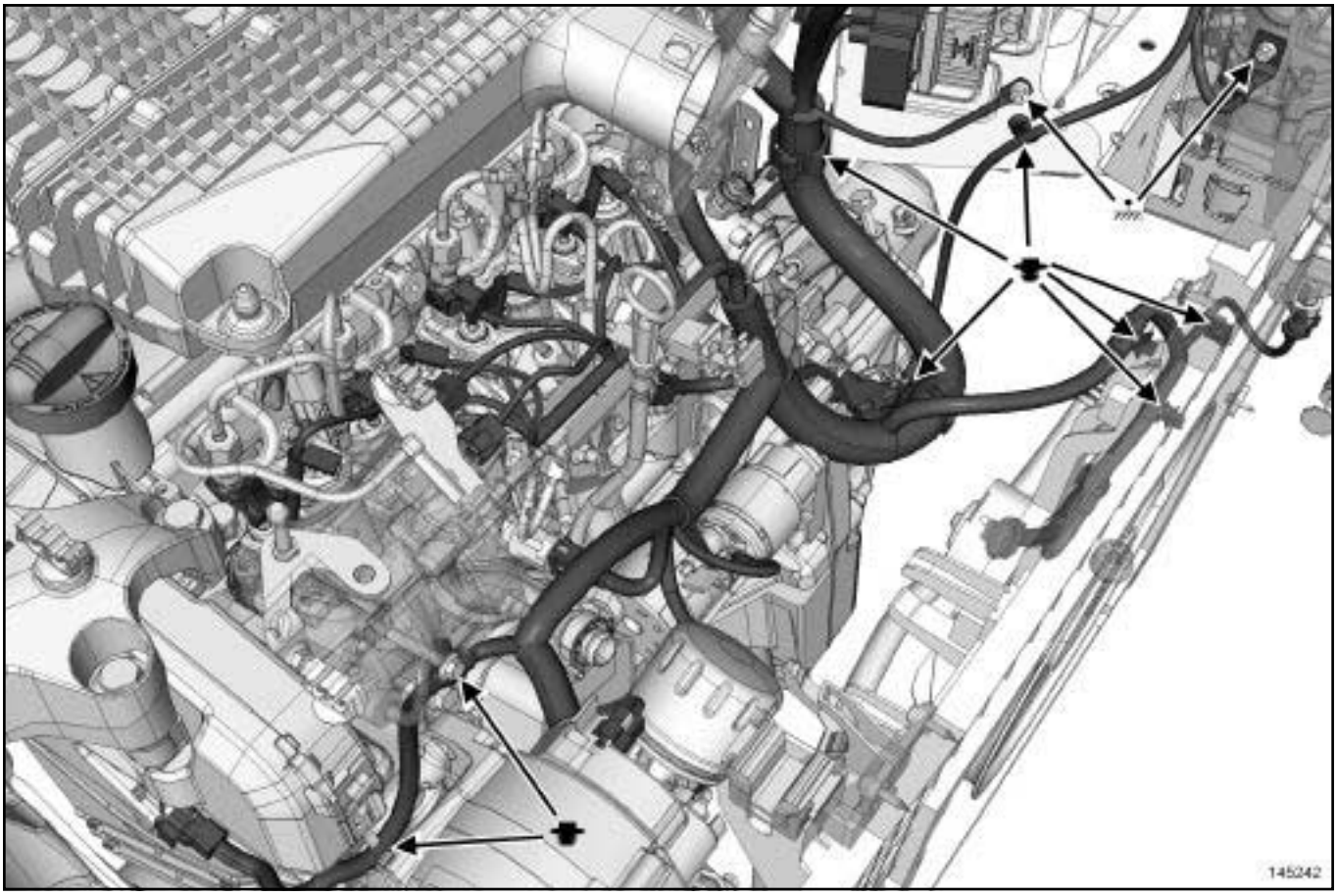

145242

❑ Disconnect all the connectors.

❑ Unclip the engine wiring where indicated.

❑

> Note:
>
> Before removing the earth terminal, mark its position using a **indelible pencil** by drawing a line on the earth terminal and on the gearbox casing.
>
> When reassembling, improper positioning of the earth terminal on the gearbox casing could result in damage to the earth terminal or earth wiring.

❑ Remove the earth terminals.

> **WARNING**
>
> To prevent any damage during the removal operation, check that the wiring is free from its mountings (retaining clip, plastic clip, adhesive tape, connector, etc.).

❑ Remove the engine wiring.

REFITTING

I - REFITTING PREPARATION OPERATION

If replacing the engine wiring

❑ Refit the fuses.

❑ If replacing with a complete wiring harness, lock the unused connectors (see **Connectors: Sealing and locking**) (Technical Note 6015A, 88A, Wiring).

II - REFITTING OPERATION

❑ Proceed in the reverse order to removal.

> Note:
>
> Refit the earth terminal, aligning the indelible marks on the gearbox casing.
>
> When reassembling, improper positioning of the earth terminal on the gearbox casing could result in damage to the earth terminal or earth wiring.

❑ Torque tighten:

- the **manual gearbox earth cable bolt (24 N.m)**,

K9K, and 796

- the **earth cable nuts (8 N.m)**.

❏ Connect the battery (see **80A**, **Battery**, **Battery: Removal - Refitting**, page **80A-2**) (80A, Battery).

III - TEST OPERATION

❏ Switch on the ignition.

❏ Connect the **Diagnostic tool**.

❏ Check that there are no faults.

Equipment required
Diagnostic tool

Tightening torques ▽	
earth nuts	**8 N.m**

IMPORTANT

To avoid all risk of damage to the systems, apply the safety and cleanliness instructions and operation recommendations before carrying out any repair:

- (See **Wiring: Precautions for repair**) (88A, Wiring),
- (see **Vehide: Precautions for repair**) (01D, Mechanical introduction).

IMPORTANT

To prevent any accidental triggering during an operation on or near to a passive safety component, apply the procedure for deactivating the safety systems (see **88C**, **Air bag and Pretensioners**, **Airbag and pretensioners: Precautions for the repair**, page **88C-3**) (88C, Airbag and pretensioners)

IMPORTANT

Never handle the pyrotechnic systems (pretensioners or airbags) near to a source of heat or naked flame - they may be triggered.

WARNING

To prevent damage to the wiring harness when refitting, observe the original routing.

WARNING

To prevent any damage to the connectors, consult the disconnection procedures (see **Connectors: Disconnection and reconnection**) (Technical Note 6015A, 88A, Wiring).

Note:

For information on instrument connectors (see **Visu-Schéma**).

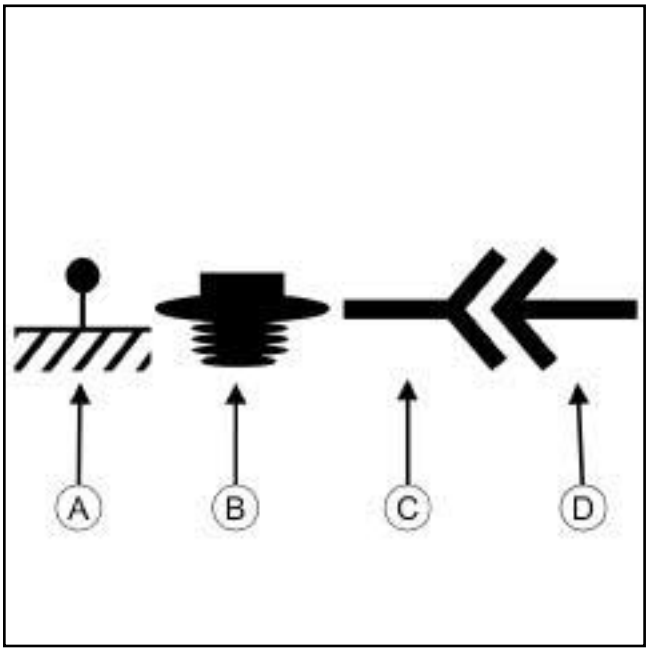

144441

(**A**)	Symbol for an earth
(**B**)	Symbol for a mounting (clip, clamp, etc.)
(**C**)	Symbol for a female connector (connection of 2 wires)
(**D**)	Symbol for a male connector (connection of 2 wires)

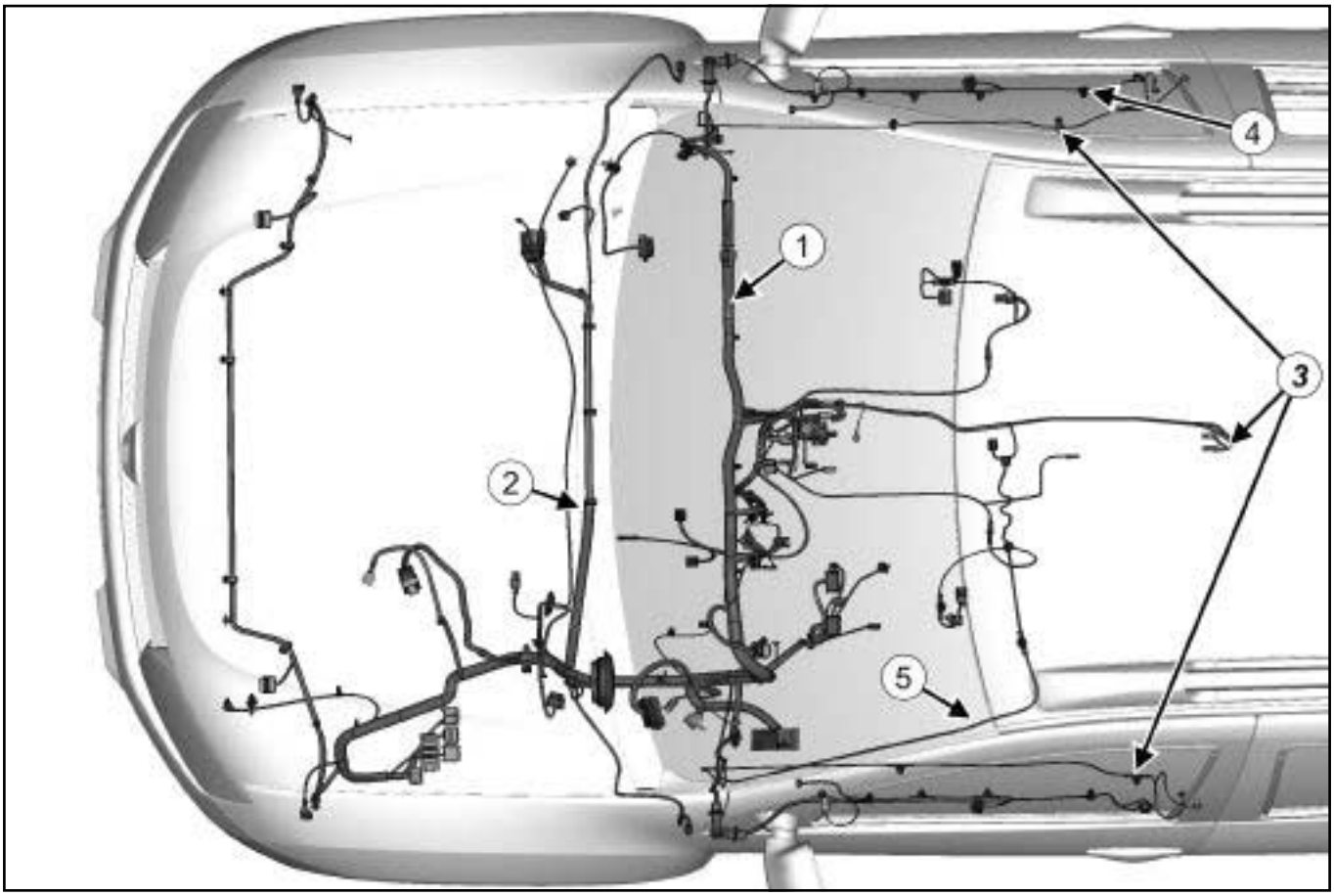

144392

(**1**)	Passenger compartment front wiring section on the dashboard cross member
(**2**)	Passenger compartment front wiring section in the engine compartment
(**3**)	Passenger compartment front wiring section on the floor
(**4**)	Passenger compartment front wiring section in the front doors
(**5**)	Passenger compartment front wiring section in the roof

REMOVAL

I - REMOVAL PREPARATION OPERATION

❑ Lock the airbag computer using the **Diagnostic tool** (see **Fault finding - Replacement of components**) (88C, Airbags and pretensioners).

❑ Disconnect the battery (see **80A**, **Battery**, **Battery: Removal - Refitting**, page **80A-2**) (80A, Battery).

1 - Passenger compartment front wiring section on the dashboard cross member

❑ Remove the dashboard (see **Dashboard: Removal - Refitting**) (57A, Interior equipment).

2 - Passenger compartment front wiring section in the engine compartment.

❑ Position the vehicle on a two-post lift (see **Vehicle: Towing and lifting**) (02A, Lifting equipment).

❑ Remove:

- the scuttle panel grille,
- the front bumper (see **Front bumper assembly: Exploded view**) (55A, Exterior protection),
- the headlights (see **80B**, **Headlights**, **Headlight assembly: Exploded view**, page **80B-1**) (80B, Headlights),
- the front right-hand wheel arch liner (see **Exterior body front trim assembly: Exploded view**) (55A, Exterior protection),
- the engine compartment fuse and relay box cover,
- the expansion bottle (see **Expansion bottle: Removal - Refitting**) (19A, Cooling).

3 - Passenger compartment front wiring section on the floor

❏ Remove:

- the front seats (see **Front seat assembly: Exploded view**) (75A, Front seat frames and mechanisms),
- the central console (see **Centre console: Removal - Refitting**) (57A, Interior equipment),
- the floor carpet (see **Roof trim assembly: Exploded view**) (71A, Body internal trim),
- the B-pillar trim (see **Interior body side trim assembly: Exploded view**) (71A, Body internal trim).

4 - Passenger compartment front wiring section in the front doors

❏ Remove the front side door trim (see **Front side door trim: Removal - Refitting**) (72A, Side opening elements trim).

5 - Passenger compartment front wiring section in the roof

❏ Remove:

- the windscreen pillar trim (see **Interior body side trim assembly: Exploded view**) (71A, Body internal trim).
- the headlining partially (see **Roof trim assembly: Exploded view**) (71A, Body internal trim).

II - REMOVAL OPERATION

1 - Passenger compartment front wiring section on the dashboard cross member

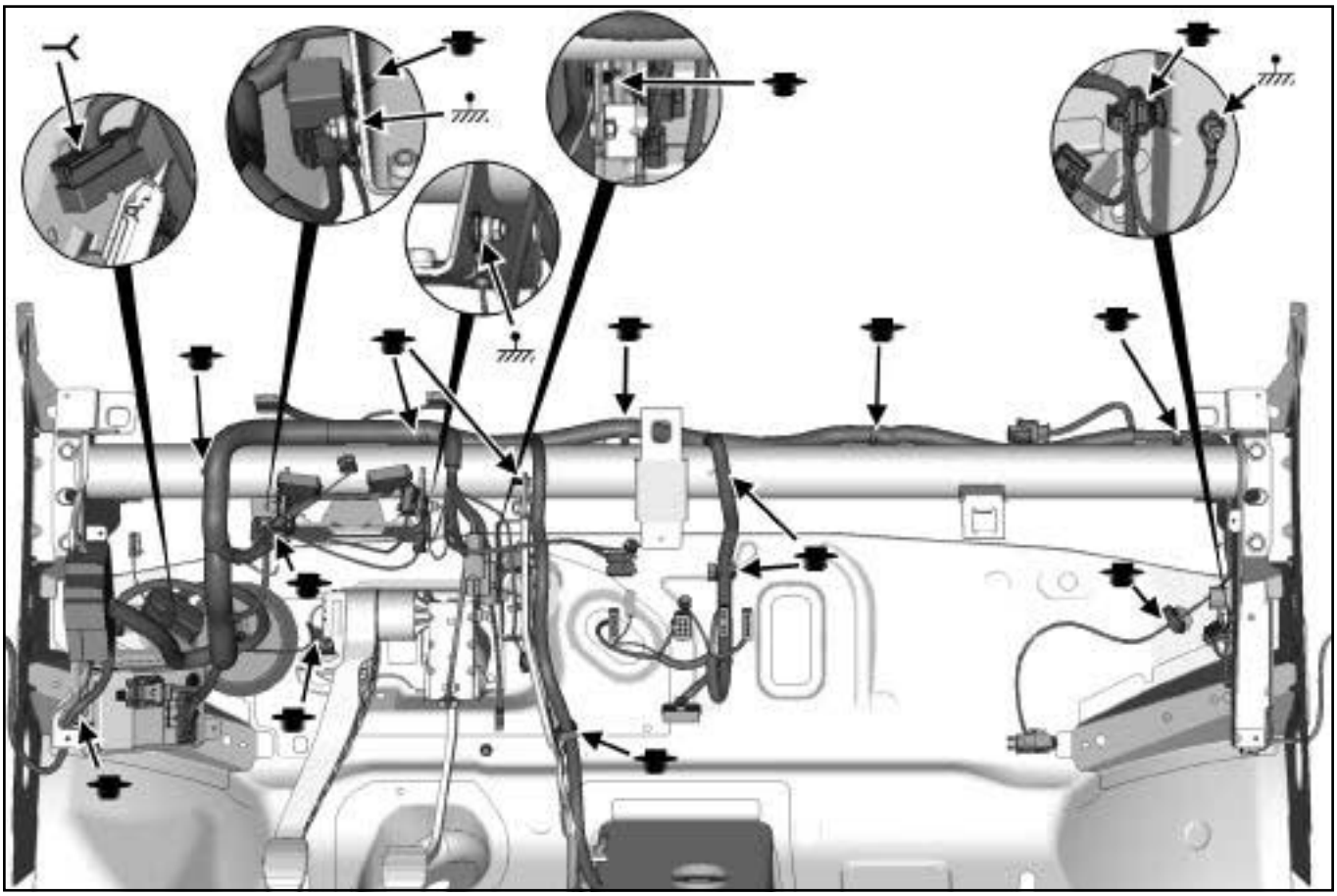

144393

❏ Disconnect all the connectors.

❏ Unclip the wiring section where indicated.

❏ Remove the earth terminals where indicated.

❏ Remove the wiring section.

2 - Passenger compartment front wiring section in the engine compartment

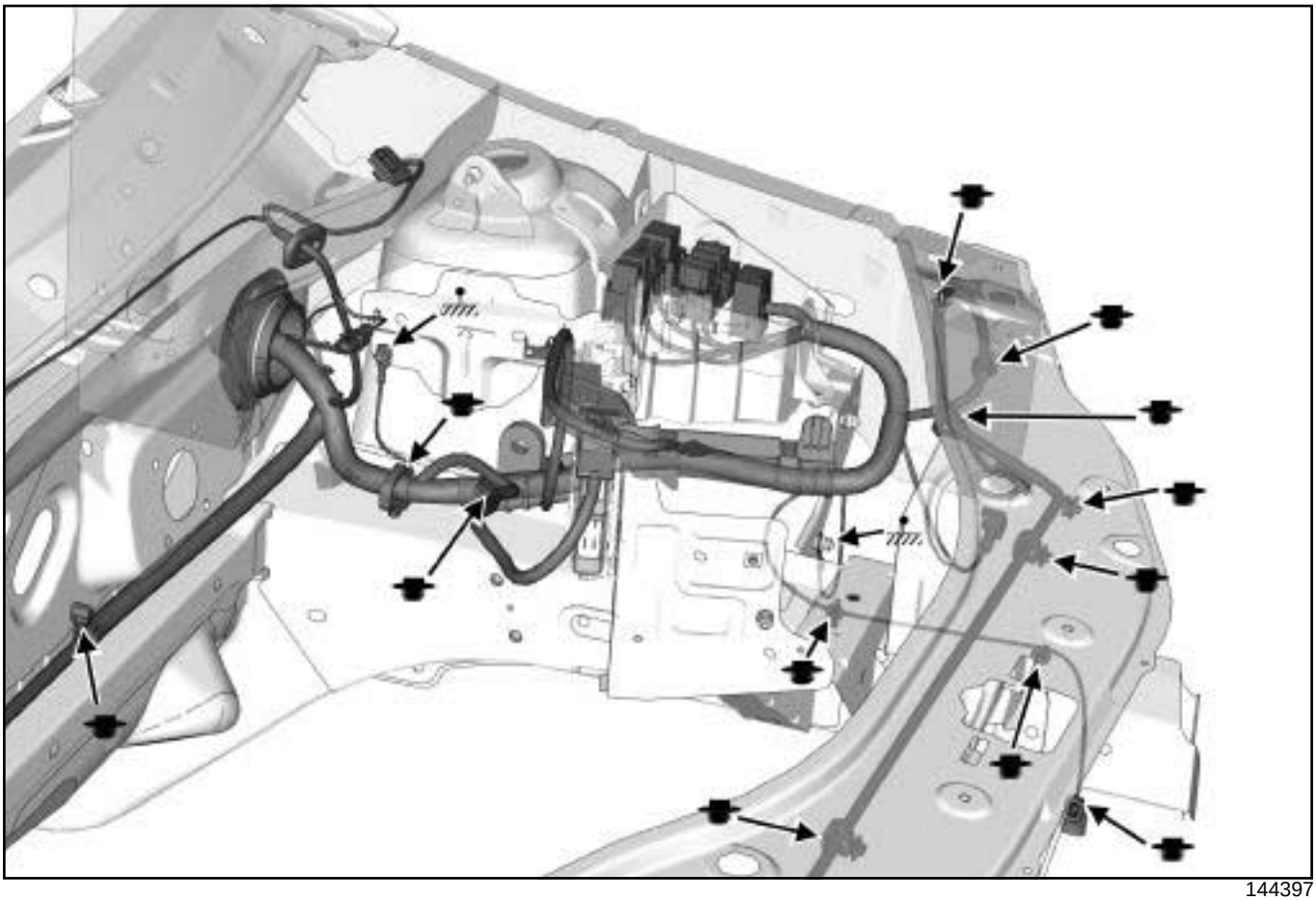

144397

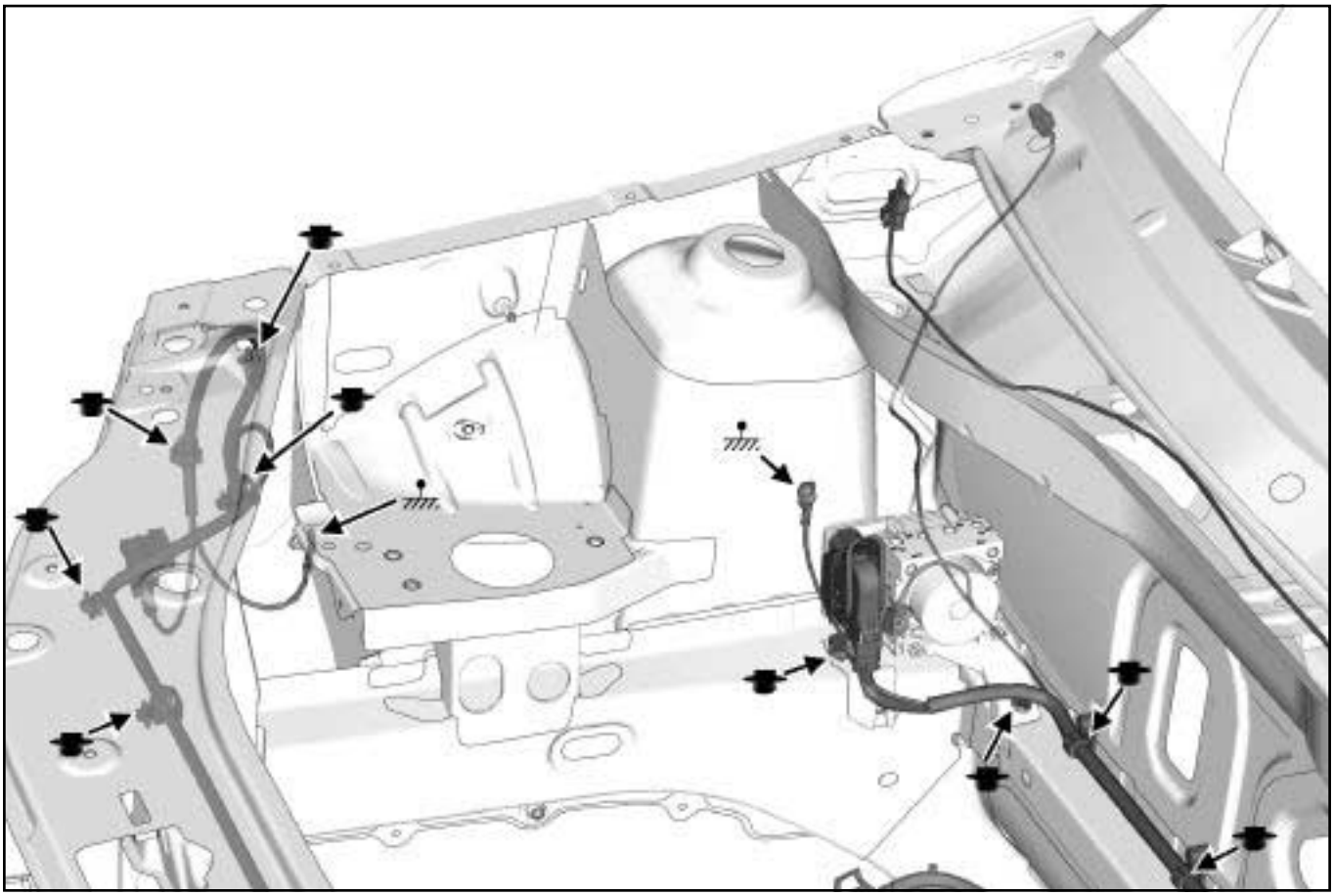

144398

- ❑ Disconnect all the connectors.
- ❑ Unclip the wiring section where indicated.
- ❑ Remove the earth terminals where indicated.
- ❑ Remove the wiring section.

3 - Passenger compartment front wiring section on the floor

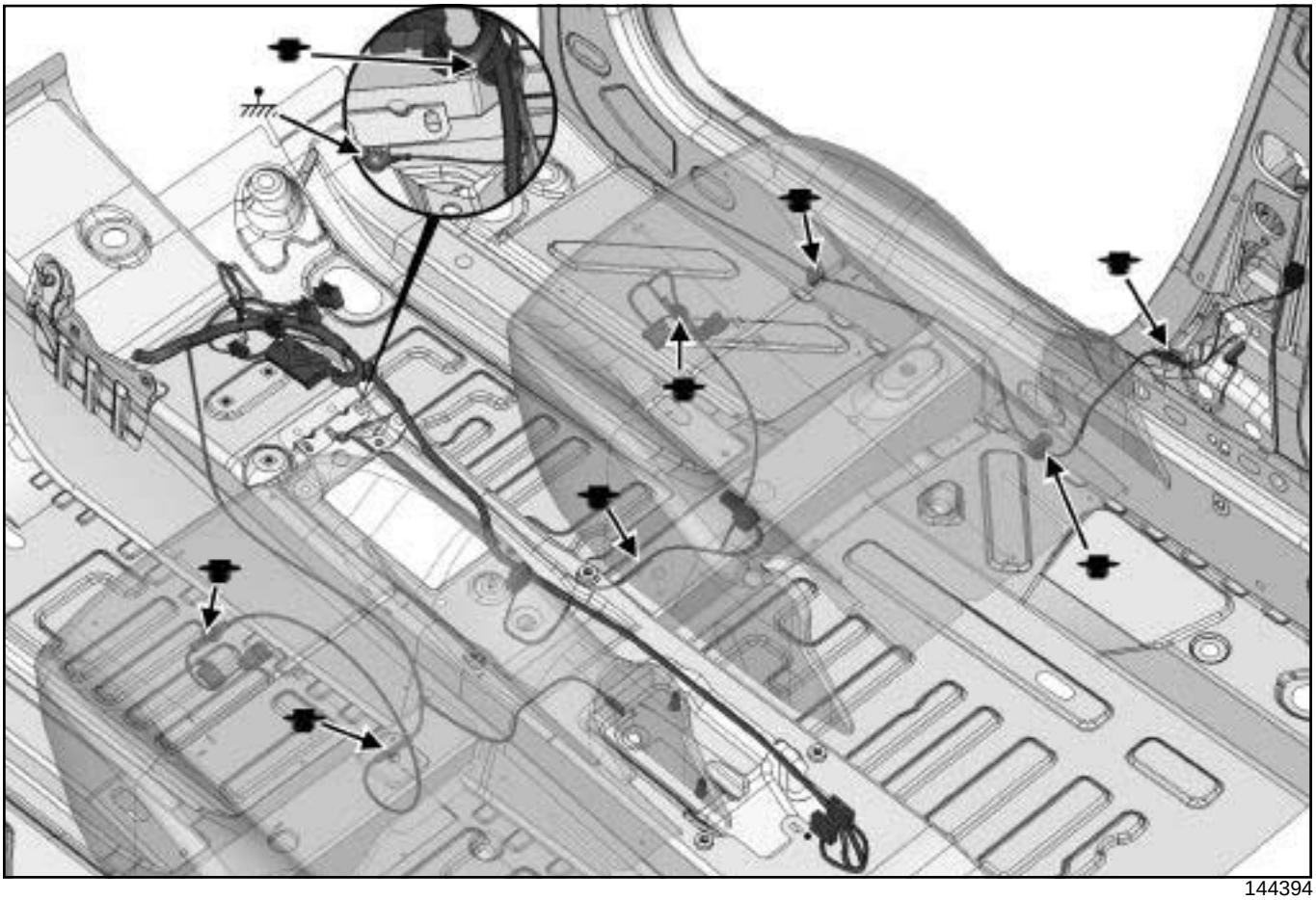

144394

- ❑ Disconnect all the connectors.
- ❑ Unclip the wiring section where indicated.
- ❑ Remove the earth terminals where indicated.
- ❑ Remove the wiring section.

4 - Passenger compartment front wiring section on the floor

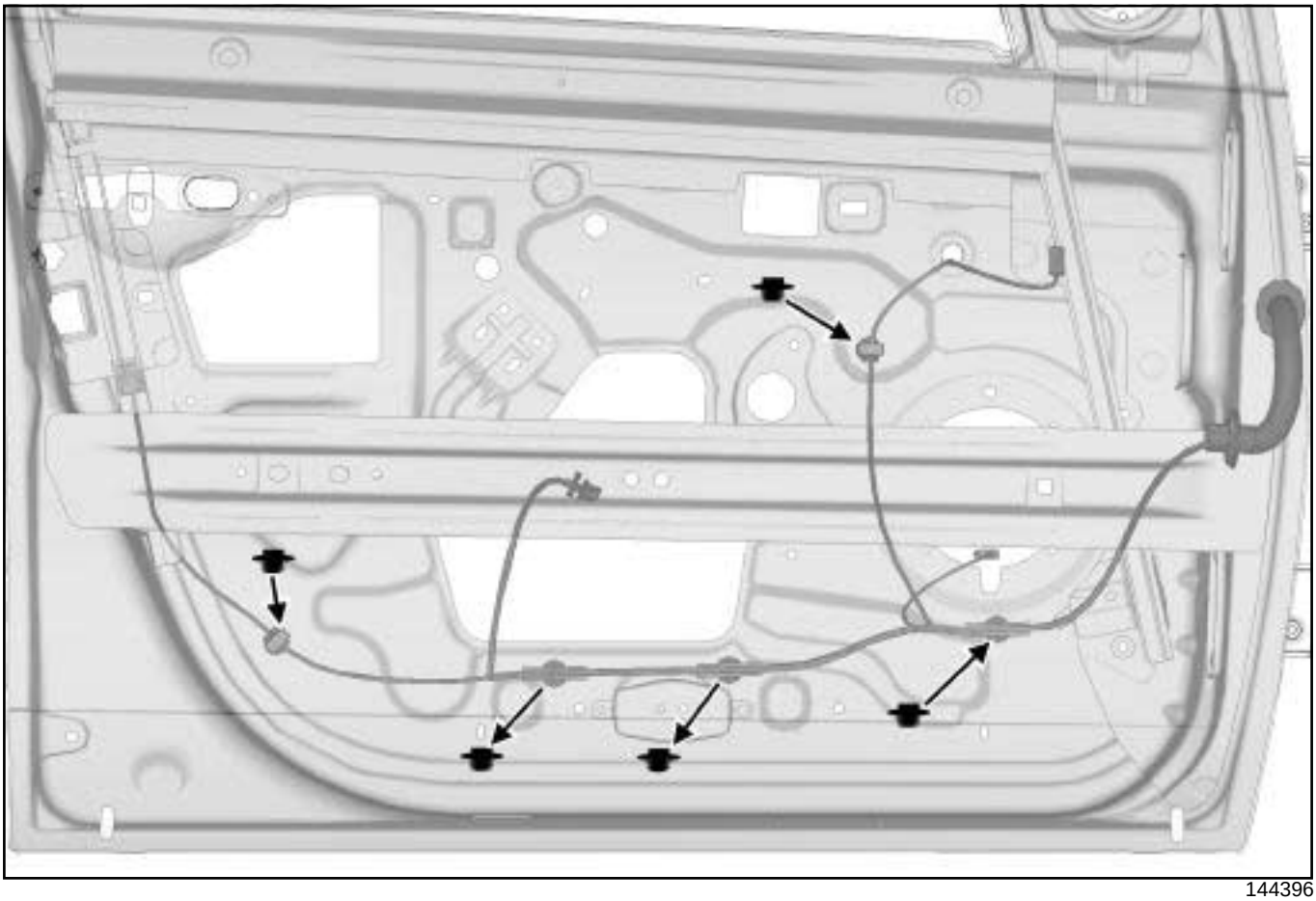

144396

- ❑ Disconnect all the connectors.
- ❑ Unclip the wiring section where indicated.
- ❑ Remove the earth terminals where indicated.
- ❑ Remove the wiring section.

5 - Passenger compartment front wiring section in the roof

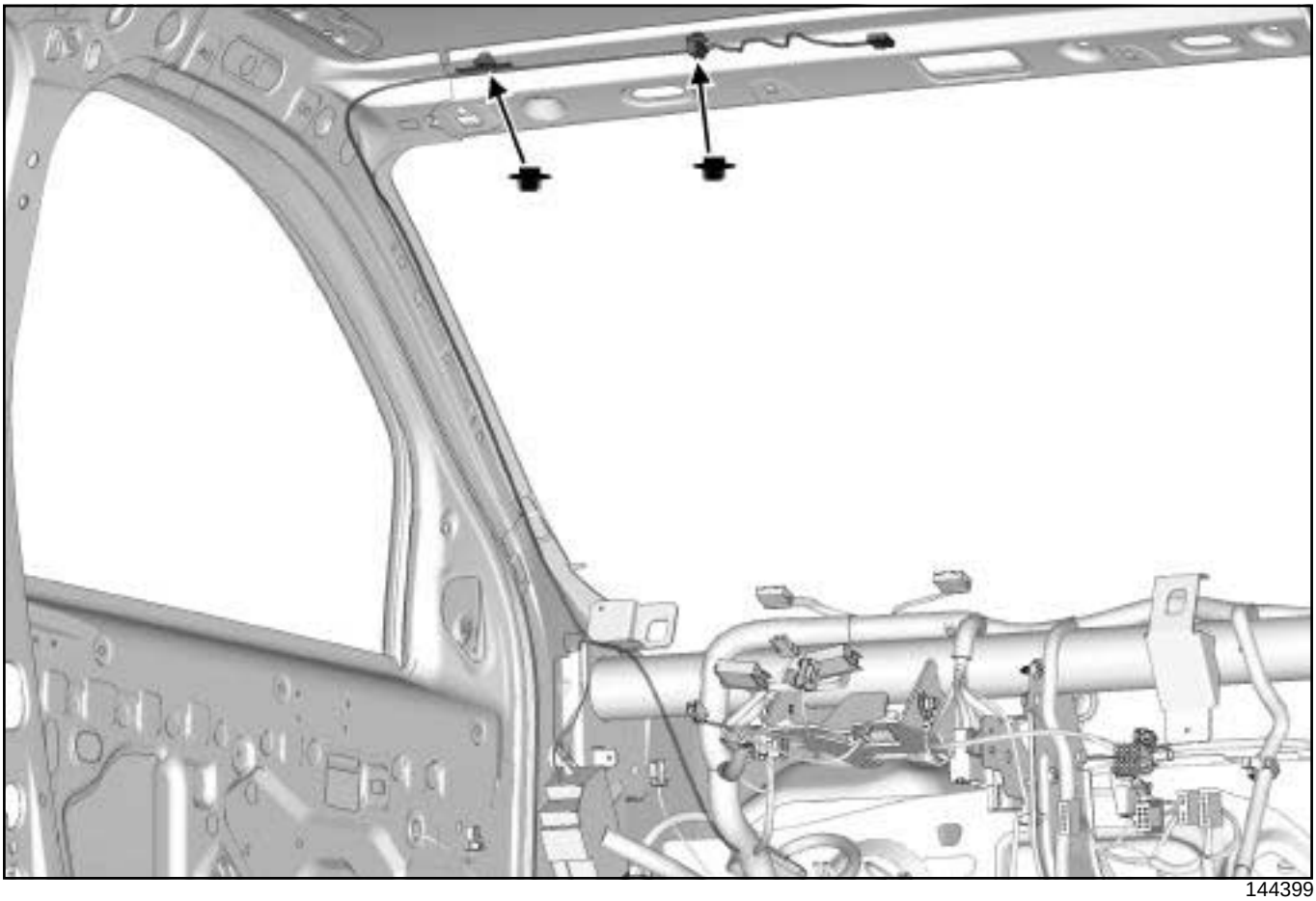

144399

- ❑ Disconnect all the connectors.
- ❑ Unclip the wiring section where indicated.
- ❑ Remove the earth terminals where indicated.
- ❑ Remove the wiring section.

REFITTING

REFITTING OPERATION

- ❑ Proceed in the reverse order to removal.
- ❑ Torque tighten the **earth nuts (8 N.m)**.
- ❑ Connect the battery (see **80A**, **Battery**, **Battery: Removal - Refitting**, page **80A-2**) (80A, Battery).
- ❑ Unlock the airbag computer using the **Diagnostic tool** (see **Fault finding - Replacement of components**) (88C, Airbags and pretensioners).

Tightening torques ▽	
earth nuts	**8 N.m**

IMPORTANT

To avoid all risk of damage to the systems, apply the safety and cleanliness instructions and operation recommendations before carrying out any repair:

- (See **Wiring: Precautions for repair**) (88A, Wiring),
- (see **Vehide: Precautions for repair**) (01D, Mechanical introduction).

IMPORTANT

To prevent any accidental triggering during an operation on or near to a passive safety component, apply the procedure for deactivating the safety systems (see **88C**, **Air bag and Pretensioners**, **Airbag and pretensioners: Precautions for the repair**, page **88C-3**) (88C, Airbag and pretensioners)

IMPORTANT

Never handle the pyrotechnic systems (pretensioners or airbags) near to a source of heat or naked flame - they may be triggered.

WARNING

To prevent damage to the wiring harness when refitting, observe the original routing.

WARNING

To prevent any damage to the connectors, consult the disconnection procedures (see **Connectors: Disconnection and reconnection**) (Technical Note 6015A, 88A, Wiring).

Note:

For information on instrument connectors (see **Visu-Schéma**).

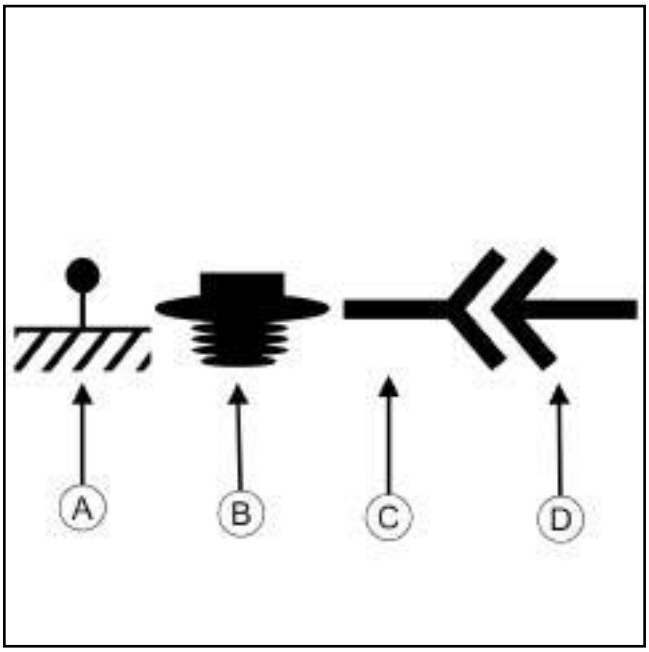

144441

(**A**)	Symbol for an earth
(**B**)	Symbol for a mounting (clip, clamp, etc.)
(**C**)	Symbol for a female connector (connection of 2 wires)
(**D**)	Symbol for a male connector (connection of 2 wires)

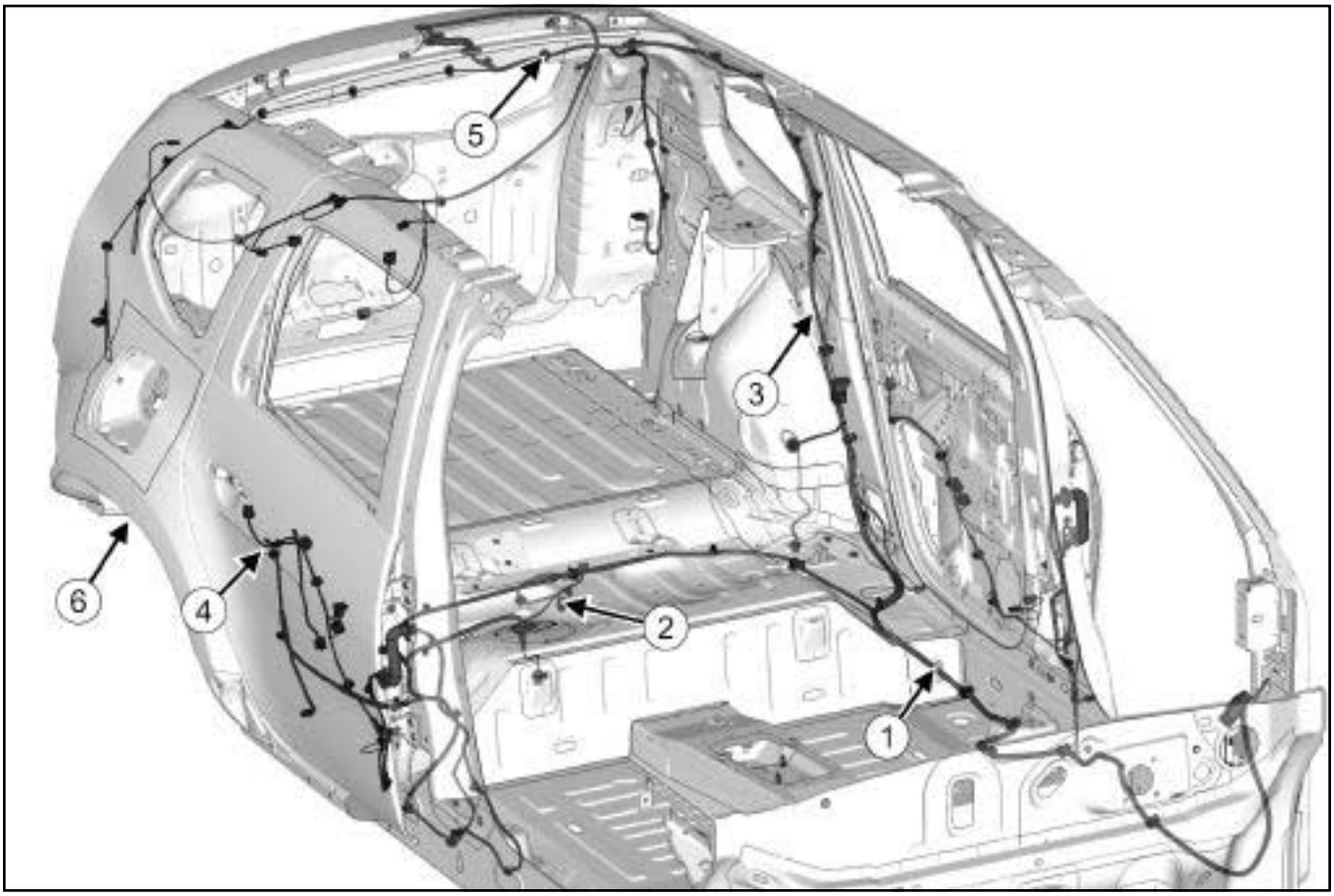

144400

(**1**)	Passenger compartment rear wiring section on the floor
(**2**)	Passenger compartment rear wiring section under the floor
(**3**)	Passenger compartment rear wiring section on the body
(**4**)	Passenger compartment rear wiring section in the rear doors
(**5**)	Passenger compartment rear wiring section in the tailgate
(**6**)	Passenger compartment rear wiring section in the wheel arches

REMOVAL

I - REMOVAL PREPARATION OPERATION

❑ Disconnect the battery (see **80A**, **Battery**, **Battery: Removal - Refitting**, page **80A-2**) (80A, Battery).

1 - Passenger compartment rear wiring section on the floor

❑ Remove:

- the floor carpet (see **Roof trim assembly: Exploded view**) (71A, Body internal trim),
- the B-pillar trim (see **Interior body side trim assembly: Exploded view**) (71A, Body internal trim).

❑ Lift up the rear bench seat base.

2 - Passenger compartment rear wiring section under the floor.

❑ Position the vehicle on a two-post lift (see **Vehicle: Towing and lifting**) (02A, Lifting equipment).

❑ Move the fuel tank away (see **Fuel tank: Removal - Refitting**) (19C, Tank).

3 - Passenger compartment rear wiring section on the body

❑ Remove (see **Interior body side trim assembly: Exploded view**) (71A, Body internal trim):

- the C-pillar trims,
- the parcel shelf side trims,

- the upper C-pillar trims,
- the luggage compartment side trims.

❑ Partially remove the headlining (see **Roof trim assembly: Exploded view**) (71A, Body internal trim).

4 - Passenger compartment rear wiring section in the rear doors

❑ Remove the rear side door trim (see **Rear side door trim: Removal - Refitting**) (72A, Side opening element trim).

5 - Passenger compartment rear wiring section in the tailgate

❑ Remove the tailgate trim (see) (73A, Non-side opening elements trim).

6 - Passenger compartment rear wiring section in the wheel arches

❑ Remove:

- the rear wheels (see **Wheel: Removal - Refitting**) (35A, Wheels and tyres)
- the ABS sensor cover.

II - REMOVAL OPERATION

1 - Passenger compartment rear wiring section on the floor

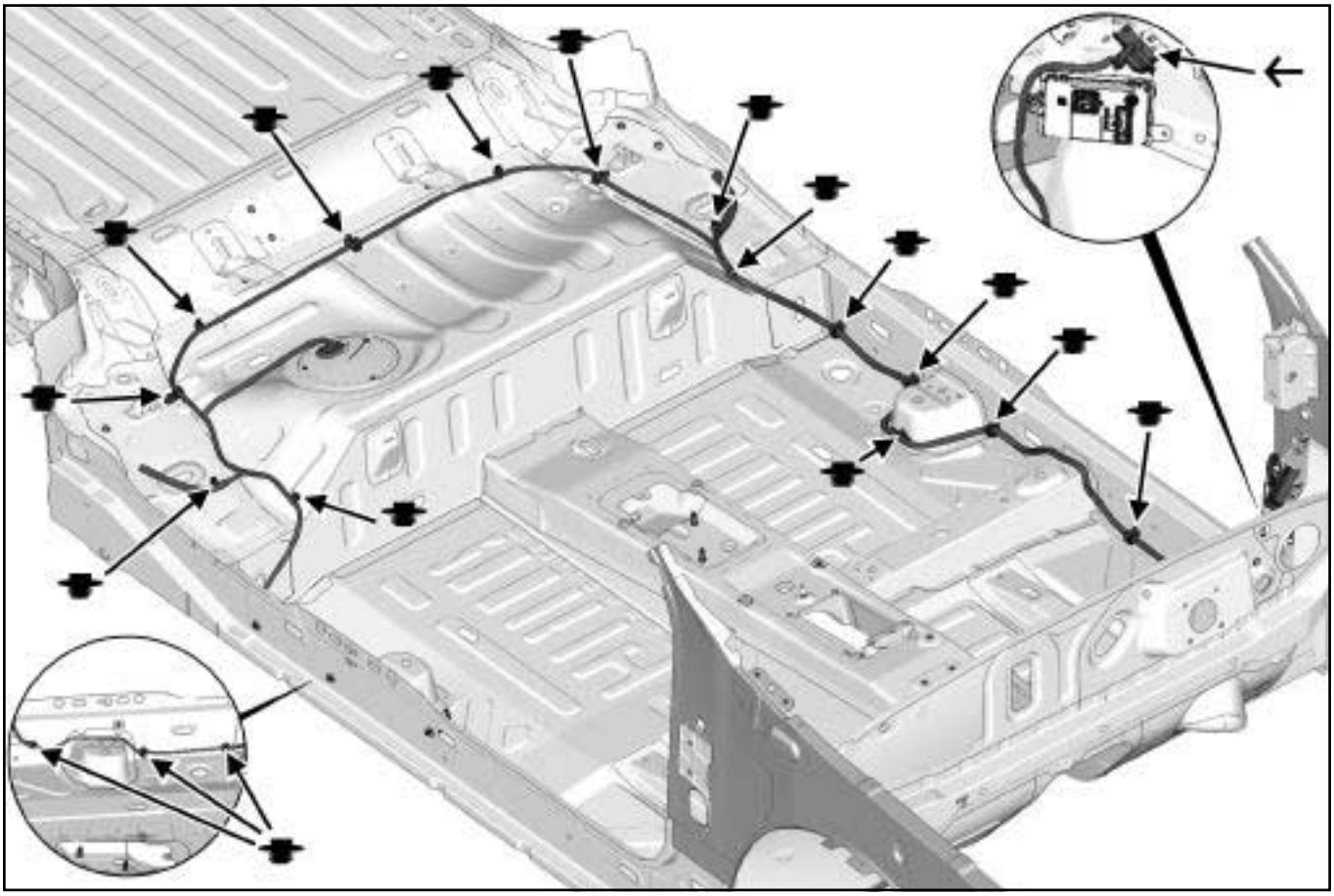

144401

❑ Disconnect all the connectors.

❑ Unclip the wiring section where indicated.

❑ Remove the earth terminals where indicated.

❑ Remove the wiring section.

2 - Passenger compartment rear wiring section under the floor.

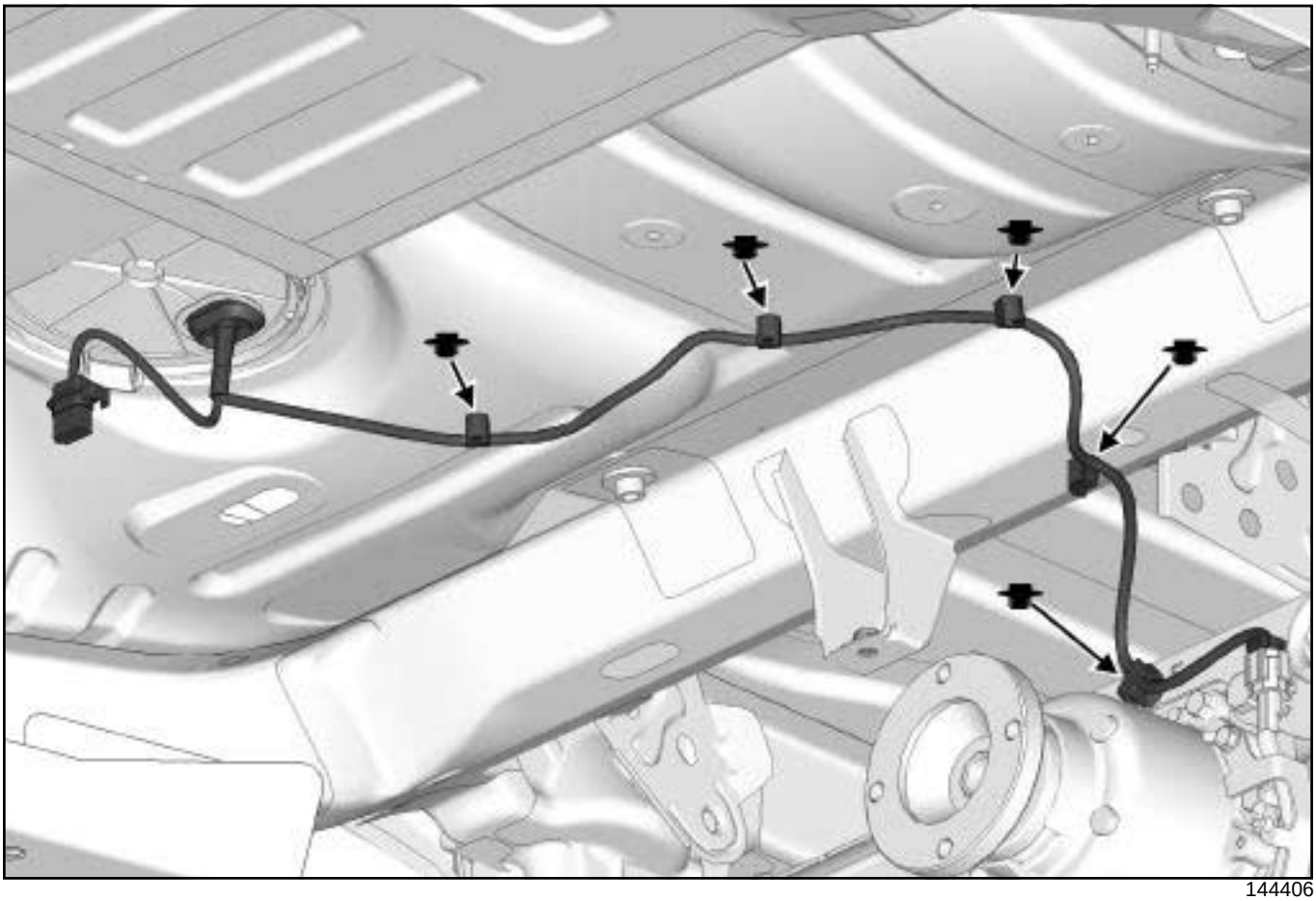

144406

- ❑ Disconnect all the connectors.
- ❑ Unclip the wiring section where indicated.
- ❑ Remove the earth terminals where indicated.
- ❑ Remove the wiring section.

3 - Passenger compartment rear wiring section on the body

Left-hand side

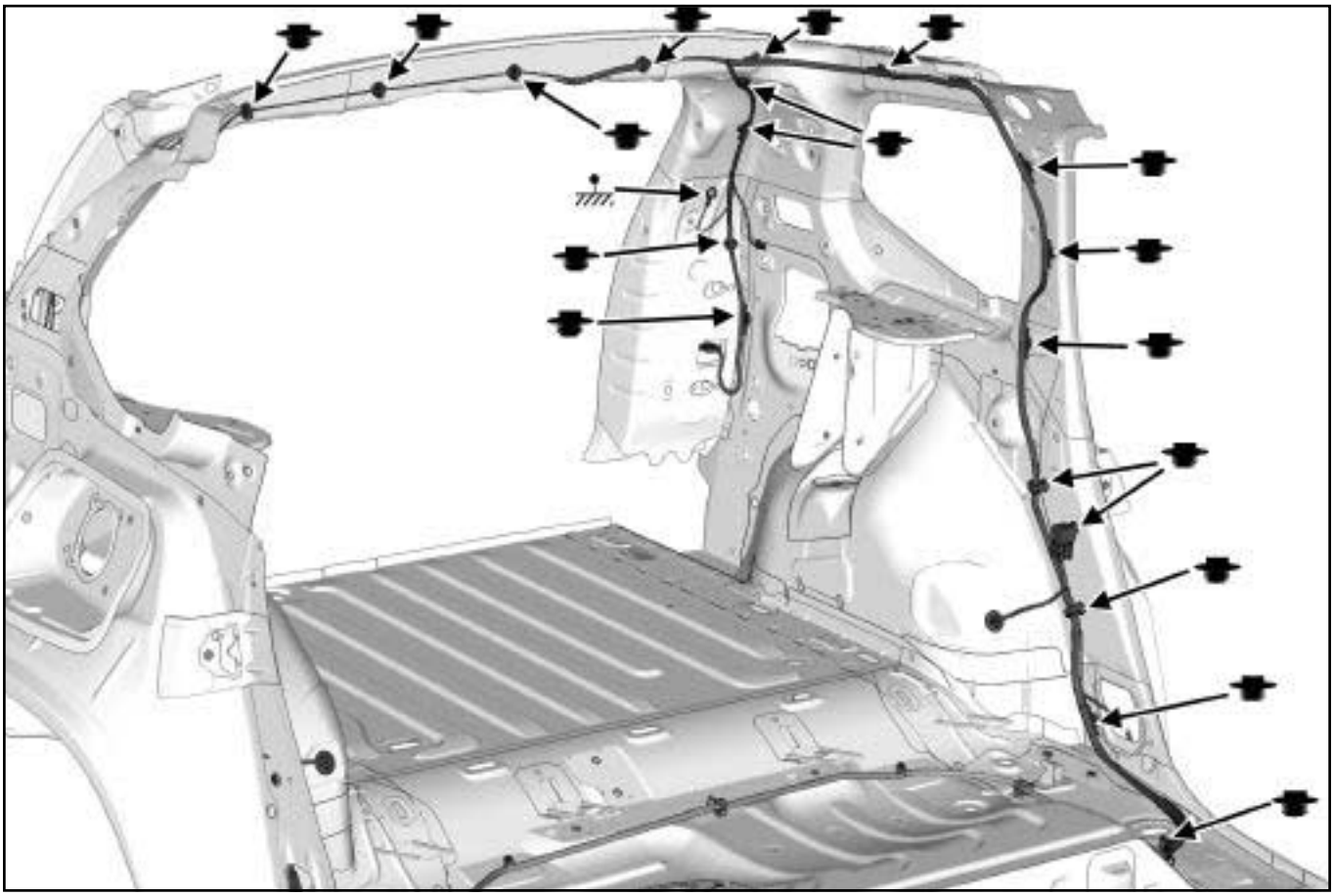

144404

Right-hand side

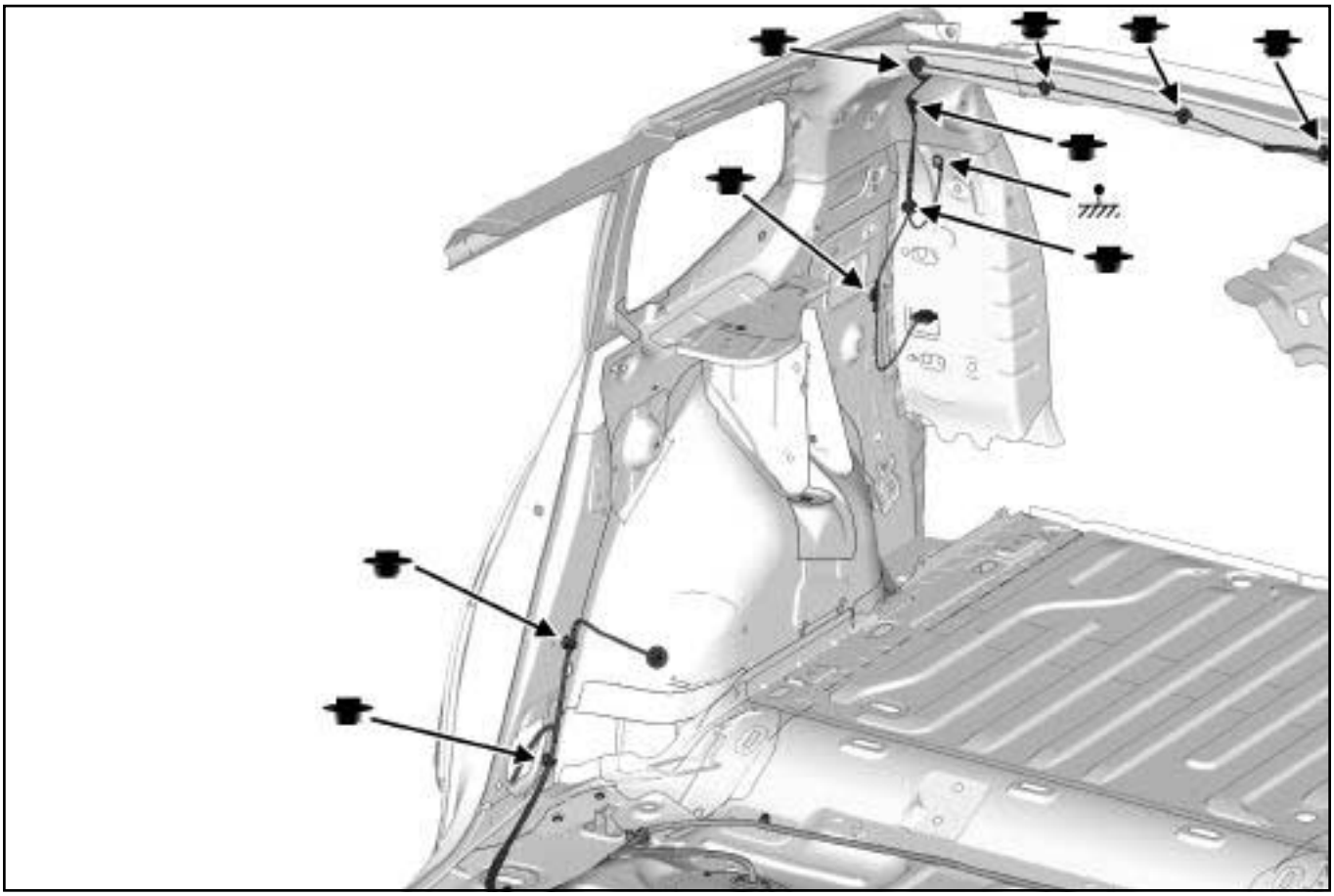

144408

- ❑ Disconnect all the connectors.
- ❑ Unclip the wiring section where indicated.
- ❑ Remove the earth terminals where indicated.
- ❑ Remove the wiring section.

4 - Passenger compartment rear wiring section in the rear doors

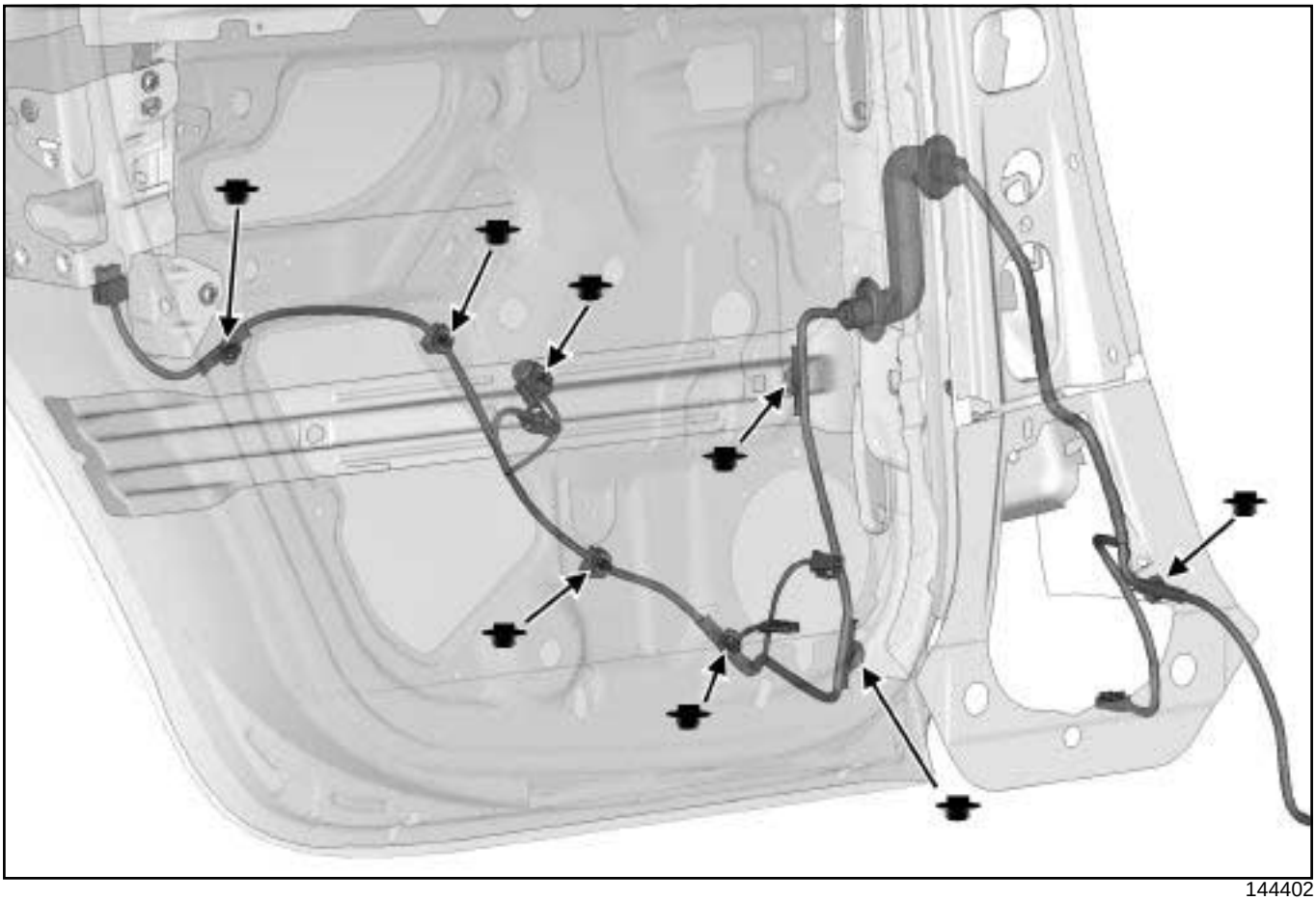

144402

- ❑ Disconnect all the connectors.
- ❑ Unclip the wiring section where indicated.
- ❑ Remove the earth terminals where indicated.
- ❑ Remove the wiring section.

5 - Passenger compartment rear wiring section in the tailgate

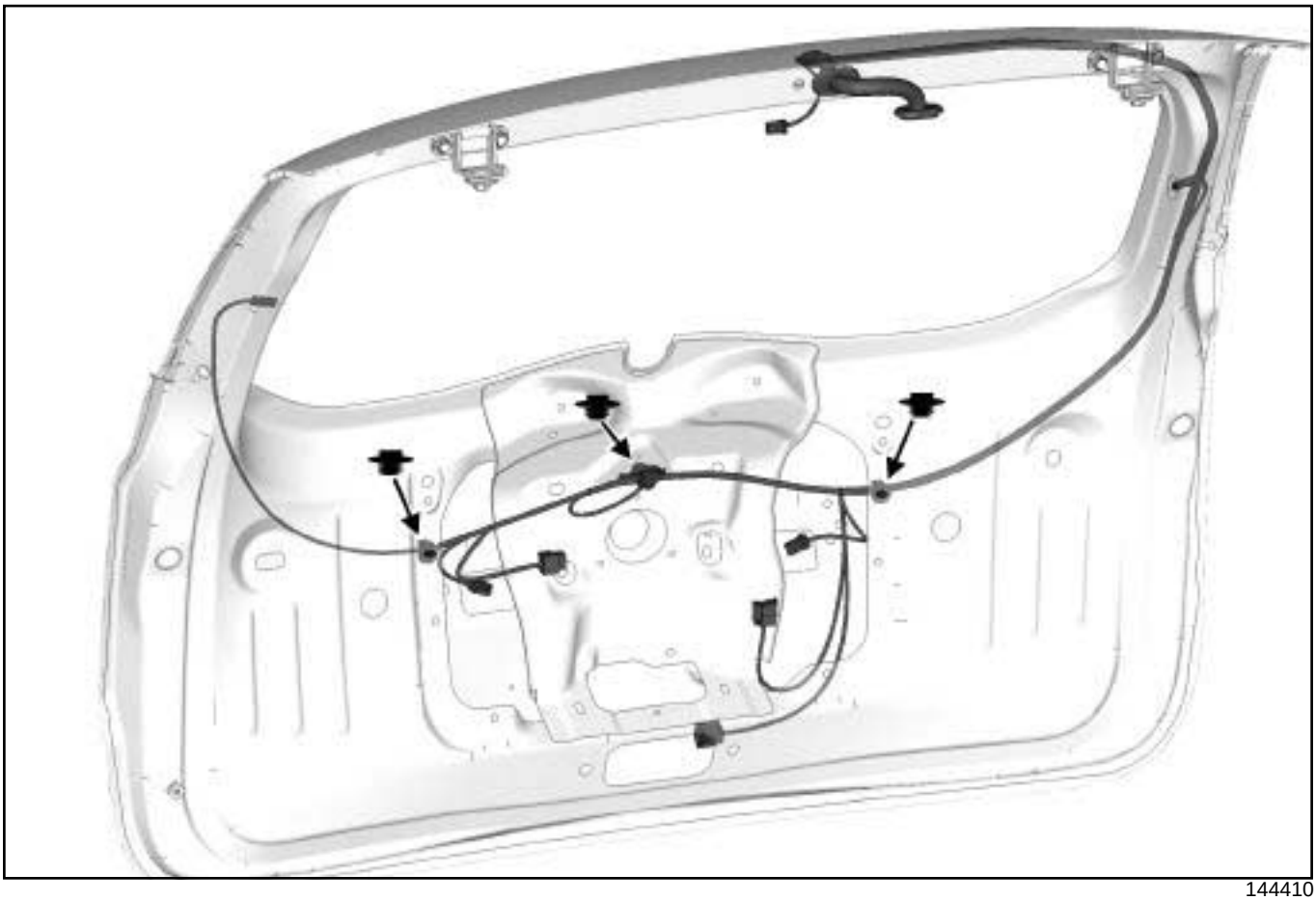

144410

- ❑ Disconnect all the connectors.
- ❑ Unclip the wiring section where indicated.
- ❑ Remove the earth terminals where indicated.
- ❑ Remove the wiring section.

6 - Passenger compartment rear wiring section in the wheel arches

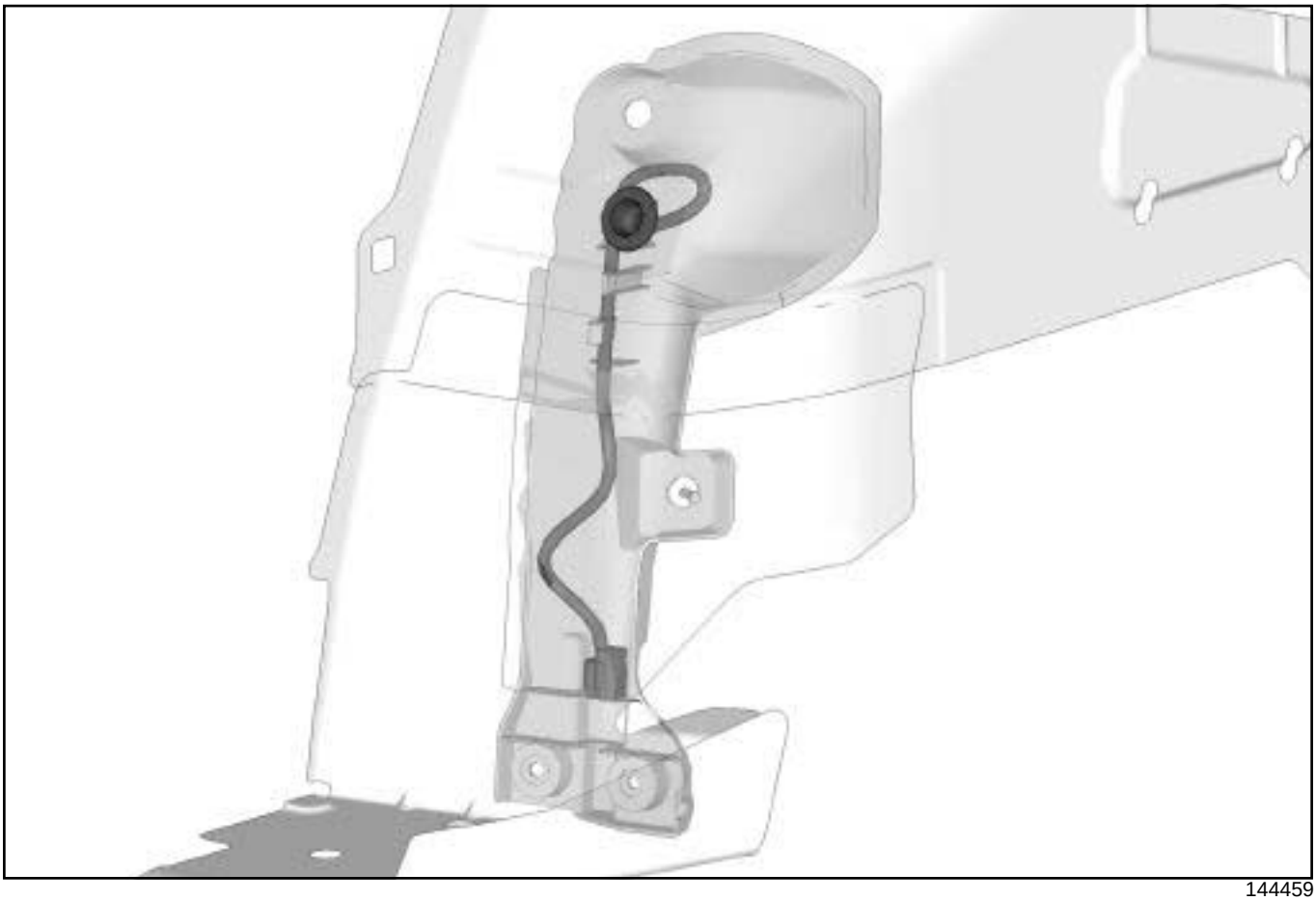

144459

- ❑ Disconnect all the connectors.
- ❑ Unclip the wiring section where indicated.
- ❑ Remove the earth terminals where indicated.
- ❑ Remove the wiring section.

REFITTING

REFITTING OPERATION

- ❑ Proceed in the reverse order to removal.
- ❑ Torque tighten the **earth nuts (8 N.m)**.
- ❑ Connect the battery (see **80A**, **Battery**, **Battery: Removal - Refitting**, page **80A-2**) (80A, Battery).

I - LIST OF COMPONENTS

No.	Description
(1)	Driver's front airbag
(2)	Passenger front airbag
(3)	Front side airbag
(4)	Airbag computer
(5)	Side impact sensor
(6)	Inhibitor switch

II - LOCATION OF COMPONENTS

1 - DRIVER'S FRONT AIRBAG

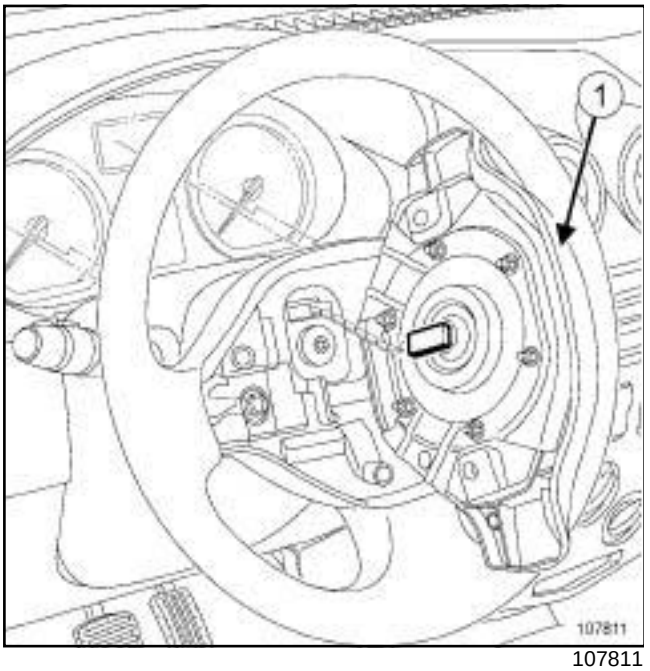

107811

Driver's front airbag (**1**)

2 - PASSENGER'S FRONT AIRBAG

PASSENGER AIRBAG

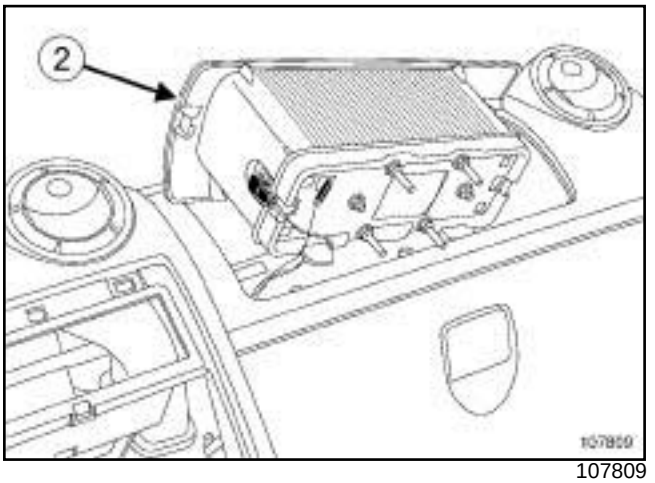

107809

Passenger front airbag (**2**)

3 - FRONT SIDE AIRBAG

FRONT SIDE AIRBAG

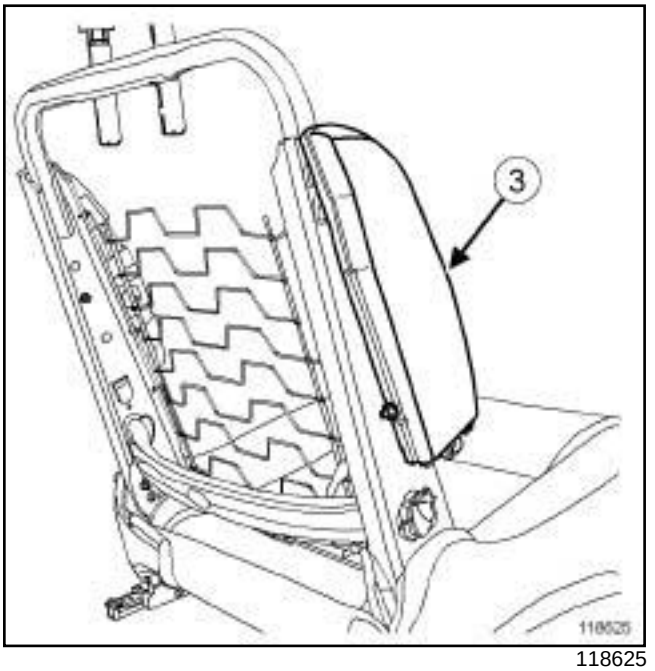

118625

Front side airbag (**3**)

4 - AIRBAG COMPUTER

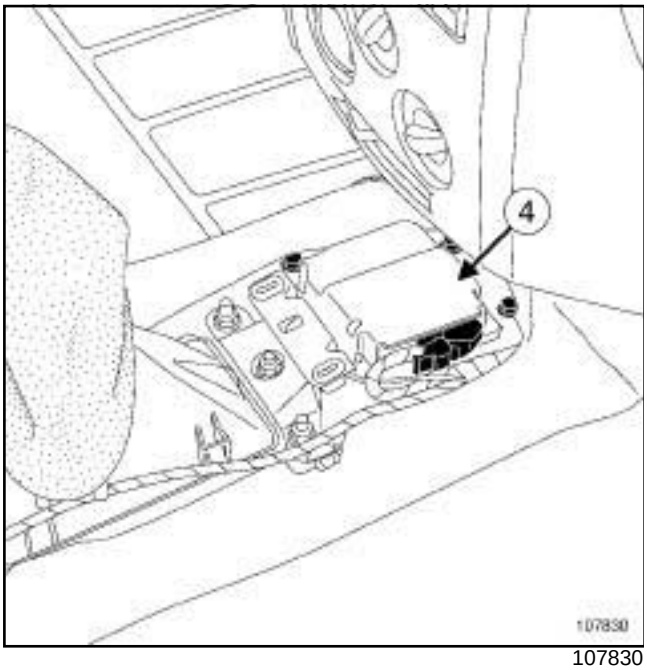

107830

Airbag computer (**4**)

5 - SIDE IMPACT SENSOR

FRONT SIDE AIRBAG

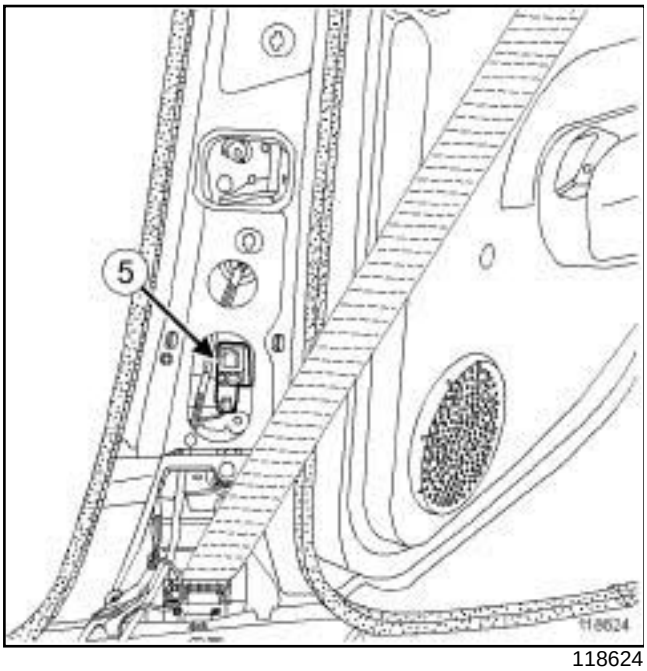

118624

Side impact sensor (**5**)

6 - INHIBITOR SWITCH

PASSENGER AIRBAG

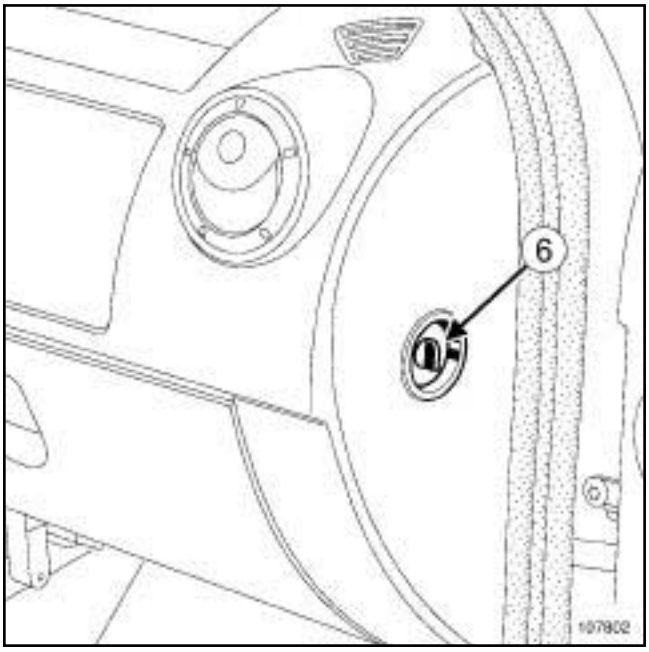

107802

Inhibitor switch (**6**)

Equipment required
Diagnostic tool

I - PRECAUTIONS FOR REPAIR

IMPORTANT

All operations on airbag and pretensioner systems must be carried out by qualified trained personnel.

The airbags have a pyrotechnic gas generator, with an ignition module and bag which must not be separated.

The pretensioners have a pyrotechnic gas generator and an igniter which must, under no circumstances, be separated.

IMPORTANT

Never handle the pyrotechnic systems (pretensioners or airbags) near to a source of heat or naked flame - they may be triggered.

IMPORTANT

To prevent any accidental triggering whilst working on or near a pyrotechnic component (airbags or pretensioners), lock the airbag computer using the **Diagnostic tool**.

When this function is activated, all the trigger lines are inhibited and the airbag warning light on the instrument panel lights up continuously (ignition on).

(see **Fault finding - Replacement of components**) (88C, Airbag and pretensioners).

When working underneath the vehicle (on the bodywork, sill panel, etc.) or for certain operations involving removal or refitting of seat trims, it is essential to lock the airbag computer using the **Diagnostic tool** and to disconnect the battery (see **80A**, **Battery**, **Battery: Removal - Refitting**, page **80A-2**) .

IMPORTANT

To prevent the pyrotechnic components from being permanently deactivated or triggered (airbags or pretensioners), check the airbag computer using the **Diagnostic tool**.

The pyrotechnic systems (pretensioners and airbags) must be checked using the **Diagnostic tool** :

- after an accident,
- after theft or attempted theft of the vehicle,
- before selling a used vehicle.

II - TRIGGERING OF THE SAFETY SYSTEMS

IMPORTANT

In order to prevent interference with the deployment of the airbags:

- do not fit a cover to the front seats,
- do not place objects in the area of deployment.

After detection of an impact, the airbag computer locks definitively and the « airbag fault » warning light is illuminated on the instrument panel. The airbag computer and the side impact sensors must always be replaced.

IMPORTANT

To eliminate the risk of any accident, do not reuse pyrotechnic components.

It is essential to destroy pretensioners or airbags before scrapping a vehicle or a part only (see **Airbags and pretensioners: Recycling - Destruction**) .

III - DURABILITY OF THE PYROTECHNIC COMPONENTS

The precautions which recommended that pyrotechnic components (airbags and pretensioners) were replaced 10 years after the registration of the vehicle have now been lifted.

Pyrotechnic components (airbags and pretensioners) do not therefore require any maintenance.

Equipment required
Diagnostic tool

Tightening torques ▽	
airbag computer bolts	**8 N.m**

IMPORTANT
Consult the safety and cleanliness advice and operation recommendations before carrying out any repair (see **88C**, **Air bag and Pretensioners**, **Airbag and pretensioners: Precautions for the repair**, page **88C-3**) .

REMOVAL

I - REMOVAL PREPARATION OPERATION

❏

IMPORTANT
To avoid any risk of triggering when working on or near a pyrotechnic component (airbags or pretensioners), lock the airbag computer using the diagnostic tool.

When this function is activated, all the trigger lines are inhibited and the airbag warning light on the instrument panel lights up continuously (ignition on).

❏ Lock the airbag computer (see **Fault finding - Replacement of components**) (88C, Airbags and pretensioners).

❏ Switch off the ignition.

❏ Disconnect the battery (see **80A**, **Battery**, **Battery: Removal - Refitting**, page **80A-2**) .

❏ Remove the centre console (see **Centre console: Removal - Refitting**) (57A, Interior equipment).

II - OPERATION FOR REMOVAL OF PART CONCERNED

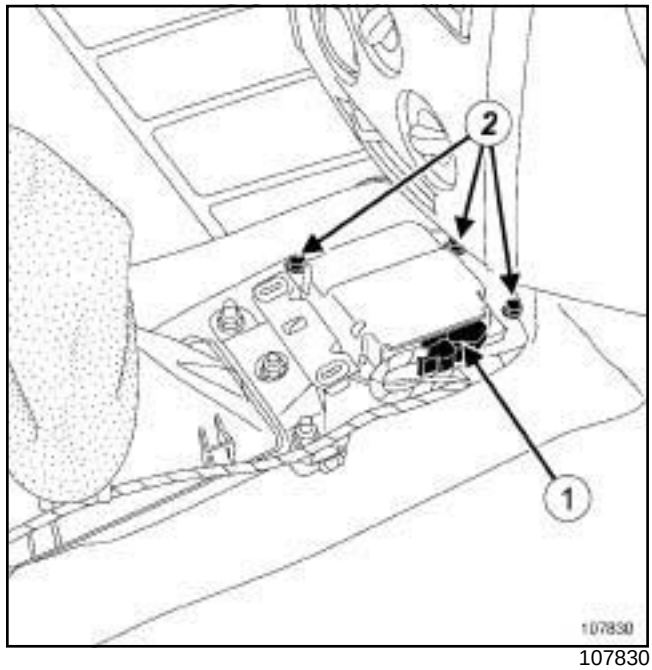

107830

❏ Disconnect the connector (**1**) .

❏ Remove:

- the three airbag computer bolts (**2**) ,
- the airbag computer.

REFITTING

I - REFITTING OPERATION

❏ Refit:

- the airbag computer,
- the three airbag computer bolts.

❏ Torque tighten the **airbag computer bolts (8 N.m)**.

❏ Connect the connector.

II - FINAL OPERATION

❏ Refit the centre console (see **Centre console: Removal - Refitting**) (57A, Interior equipment).

❏ Connect the battery (see **80A**, **Battery**, **Battery: Removal - Refitting**, page **80A-2**) .

- If the airbag computer is being replaced, carry out the necessary operations using the **Diagnostic tool** (see **Fault finding - Replacement of components**) (88C, Airbags and pretensioners).

> **IMPORTANT**
> To avoid a fault with or even triggering of pyrotechnic components (airbags or pretensioners), check the airbag computer using the diagnostic tool.

- Unlock the airbag computer (see **Fault finding - Replacement of components**) (88C, Airbag and pretensioners).

DRIVER'S AIRBAG 1

IMPORTANT

Consult the safety and cleanliness advice and operation recommendations before carrying out any repair (see **88C**, **Air bag and Pretensioners**, **Airbag and pretensioners: Precautions for the repair**, page **88C-3**) .

REMOVAL

I - REMOVAL PREPARATION OPERATION

❑

IMPORTANT

To avoid any risk of triggering when working on or near a pyrotechnic component (airbags or pretensioners), lock the airbag computer using the diagnostic tool.

When this function is activated, all the trigger lines are inhibited and the airbag warning light on the instrument panel lights up continuously (ignition on).

IMPORTANT

Never handle the pyrotechnic systems (pretensioners or airbags) near to a source of heat or naked flame - they may be triggered.

❑ Lock the airbag computer (see **Fault finding - Replacement of components**) (88C, Airbags and pretensioners).

❑ Switch off the ignition.

❑ Disconnect the battery (see **80A**, **Battery**, **Battery: Removal - Refitting**, page **80A-2**) .

II - OPERATION FOR REMOVAL OF PART CONCERNED

❑ Turn the steering wheel one quarter of a turn.

DRIVER'S AIRBAG 1

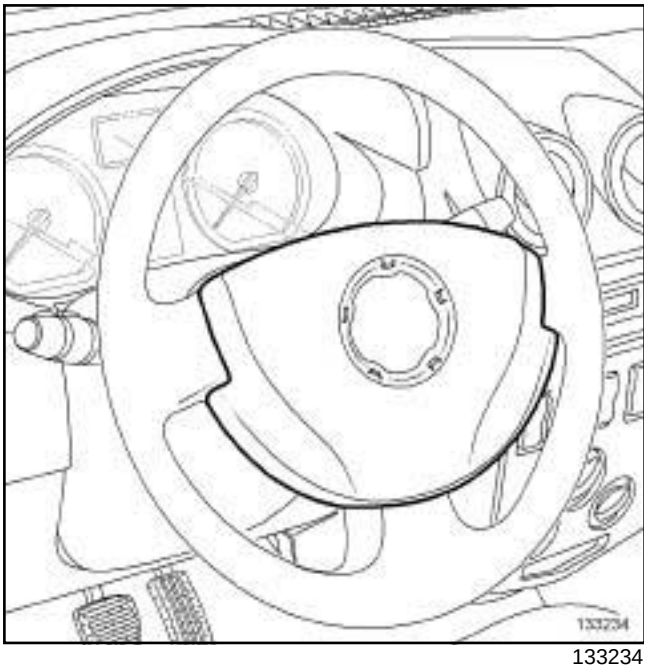

133234

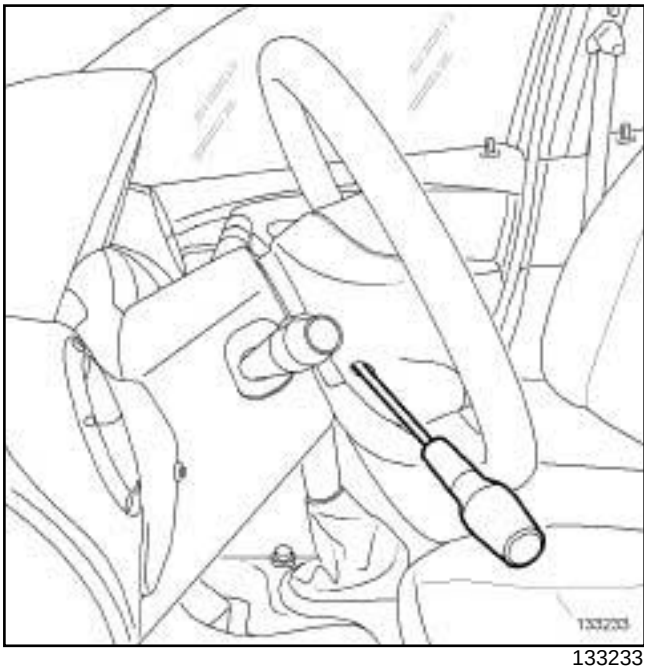

133233

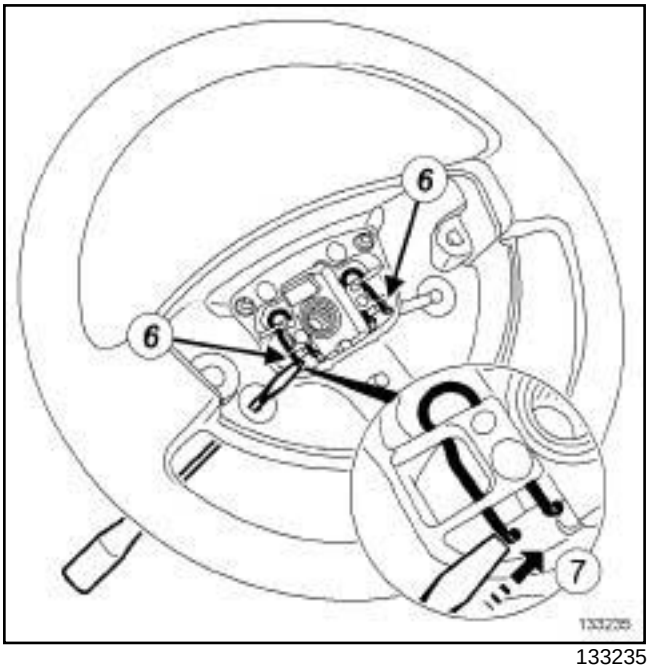

133235

❑ Unclip the driver's front airbag by separating the clips (**6**) in the direction of the arrow (**7**) using a flat-blade screwdriver via the back of the steering wheel.

DRIVER'S AIRBAG 1

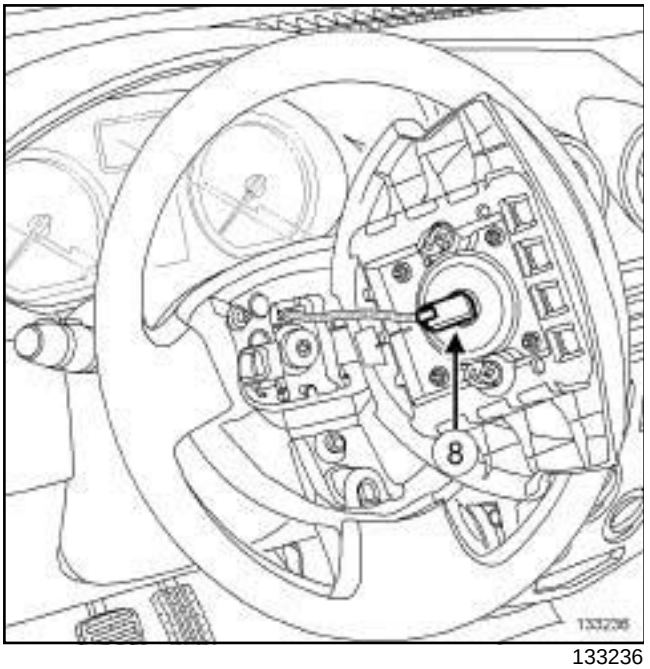

133236

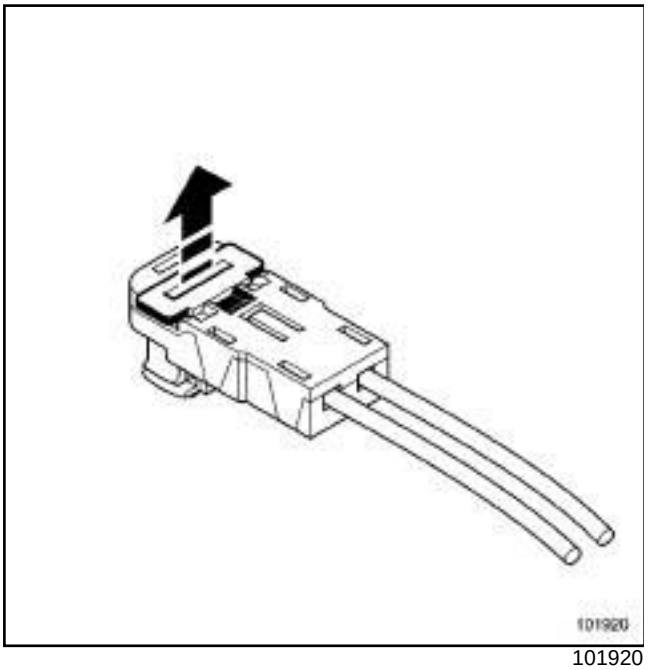

101920

❑

> Note:
>
> The airbag has a connector which short circuits if disconnected, to prevent accidental triggering.

❑ Unclip the safety cover from the driver's front airbag connector.

❑ Disconnect the connector (**8**) from the driver's front airbag.

❑

> **IMPORTANT**
>
> To prevent the any component from being thrown upwards, store the airbag with the inflatable cushion facing upwards.

❑ Remove the driver's front airbag.

REFITTING

I - REFITTING PREPARATION OPERATION

❑

> **IMPORTANT**
>
> After a seat belt pyrotechnic component is triggered, it is essential to replace certain parts (see **88C**, **Air bag and Pretensioners**, **Airbag and pretensioners: Precautions for the repair**, page **88C-3**) .

II - REFITTING OPERATION FOR PART CONCERNED

❑ Connect the connector onto the driver's front airbag.

❑ Clip the safety cover onto the driver's front airbag connector.

❑ Refit the driver's front airbag

❑ Clip the driver's front airbag onto the steering wheel.

III - FINAL OPERATION

❑ Connect the battery (see **80A**, **Battery**, **Battery: Removal - Refitting**, page **80A-2**) .

> **IMPORTANT**
>
> To avoid a fault with or even triggering of pyrotechnic components (airbags or pretensioners), check the airbag computer using the diagnostic tool.

❑ Unlock the airbag computer (see **Fault finding - Replacement of components**) (88C, Airbag and pretensioners).

> **IMPORTANT**
>
> To eliminate the risk of any accident, do not reuse pyrotechnic components.
>
> It is essential to destroy pretensioners or airbags before scrapping a vehicle or a part only (see **Airbags and pretensioners: Recycling - Destruction**) .

PASSENGER AIRBAG

Equipment required
Diagnostic tool

Tightening torques ▽	
passenger's frontal airbag module nuts	**8 N.m**

IMPORTANT
Consult the safety and cleanliness advice and operation recommendations before carrying out any repair (see **88C**, **Air bag and Pretensioners**, **Airbag and pretensioners: Precautions for the repair**, page **88C-3**) .

REMOVAL

I - REMOVAL PREPARATION OPERATION

❑

IMPORTANT
To avoid any risk of triggering when working on or near a pyrotechnic component (airbags or pretensioners), lock the airbag computer using the diagnostic tool.

When this function is activated, all the trigger lines are inhibited and the airbag warning light on the instrument panel lights up continuously (ignition on).

IMPORTANT
Never handle the pyrotechnic systems (pretensioners or airbags) near to a source of heat or naked flame - they may be triggered.

❑ Lock the airbag computer (see **Fault finding - Replacement of components**) (88C, Airbags and pretensioners).

❑ Switch off the ignition.

❑ Disconnect the battery (see **80A**, **Battery**, **Battery: Removal - Refitting**, page **80A-2**) .

❑ Remove:

- the driver's frontal airbag (see **88C**, **Air bag and Pretensioners**, **Driver's frontal airbag: Removal - Refitting**, page **88C-6**) ,
- the steering wheel (see **Steering wheel: Removal - Refitting**) (36A, Steering assembly),
- the steering column switch assembly (see **84A**, **Control - Signals**, **Steering column switch assembly: Removal - Refitting**, page **84A-2**) ,
- the instrument panel (see **83A**, **Instrument panel**, **Instrument panel: Removal - Refitting**, page **83A-1**) ,
- the radio (see **86A**, **Radio**, **Radio: Removal - Refitting**, page **86A-3**) ,
- the dashboard (see **Dashboard: Removal - Refitting**) (57A, Interior equipment).

II - OPERATION FOR REMOVAL OF PART CONCERNED

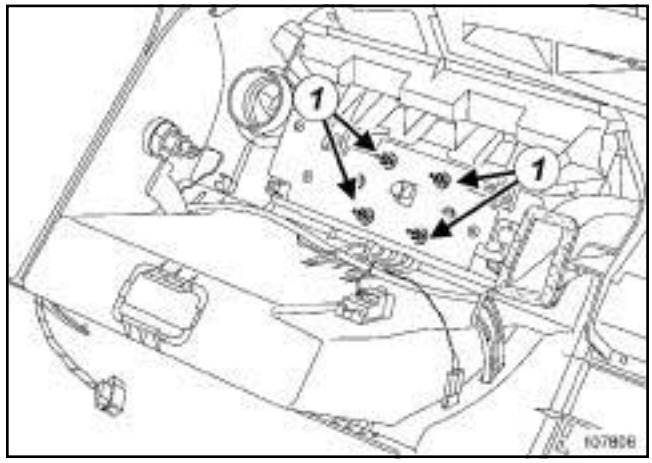

107806

❑

WARNING
To prevent damage to the wiring harness when refitting, observe the original routing.

Mark the wiring routing at the airbag module.

❑ Remove the nuts (**1**) of the passenger's frontal airbag module.

PASSENGER AIRBAG

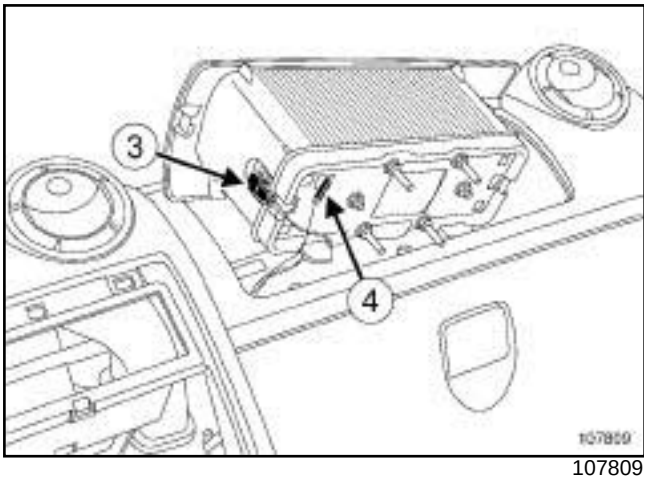

107809

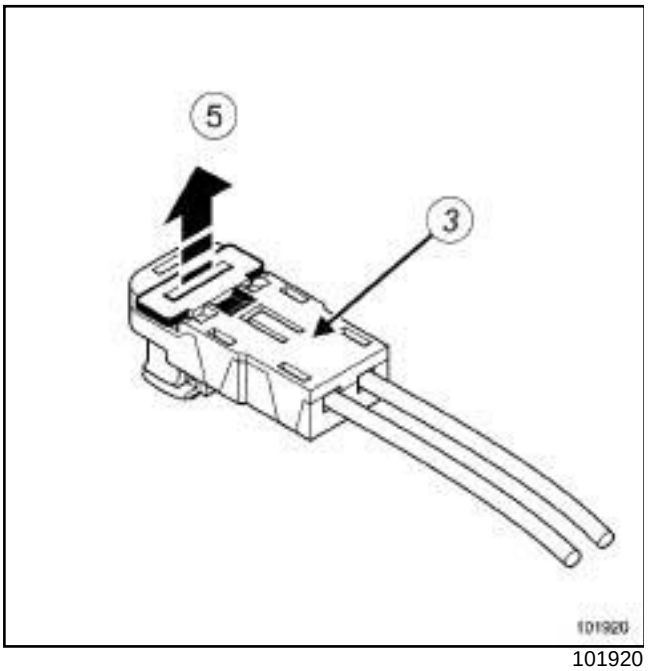

101920

❑ Unlock the passenger's frontal airbag connector (**3**) at (**5**) .

❑ Disconnect:

- the passenger's frontal airbag module connector (**3**) ,
- the earth terminal (**4**) .

❑ Remove the passenger's frontal airbag module.

REFITTING

I - REFITTING PREPARATION OPERATION

❑

> **IMPORTANT**
> After a seat belt pyrotechnic component is triggered, it is essential to replace certain parts (see **88C**, **Air bag and Pretensioners**, **Airbag and pretensioners: Precautions for the repair**, page **88C-3**)).

❑ **parts always to be replaced: Passenger's frontal airbag mounting on dashboard**

II - REFITTING OPERATION FOR PART CONCERNED

❑

> **IMPORTANT**
> To prevent the airbag triggering, connect the earth wire before the igniter connector.

❑ Connect the following to the passenger's frontal airbag:

- the earth terminal,
- the passenger frontal airbag module connector.

❑ Lock the passenger frontal airbag connector.

❑ Refit:

- the passenger's frontal airbag module,
- the new nuts of the passenger's frontal airbag module.

❑ Tighten to torque the **passenger's frontal airbag module nuts (8 N.m)**.

❑ Refit the wiring at the passenger's frontal airbag module in the position marked during removal.

III - FINAL OPERATION

❑ Refit:

- the dashboard (see **Dashboard: Removal - Refitting**) (57A, Interior equipment),
- the radio (see **86A**, **Radio**, **Radio: Removal - Refitting**, page **86A-3**) ,
- the instrument panel (see **83A**, **Instrument panel**, **Instrument panel: Removal - Refitting**, page **83A-1**) ,
- the steering column switch assembly (see **84A**, **Control - Signals**, **Steering column switch assembly: Removal - Refitting**, page **84A-2**) ,

PASSENGER AIRBAG

- the steering wheel (see **Steering wheel: Removal - Refitting**) (36A, Steering assembly),
- the driver's frontal airbag (see **88C**, **Air bag and Pretensioners**, **Driver's frontal airbag: Removal - Refitting**, page **88C-6**) .

❑ Connect the battery (see **80A**, **Battery**, **Battery: Removal - Refitting**, page **80A-2**) .

IMPORTANT

To prevent the pyrotechnic components from being permanently deactivated or triggered (airbags or pretensioners), check the airbag computer using the **Diagnostic tool**.

❑ Unlock the airbag computer (see **Fault finding - Replacement of components**) (88C, Airbag and pretensioners).

IMPORTANT

To eliminate the risk of any accident, do not reuse pyrotechnic components.

It is essential to destroy pretensioners or airbags before scrapping a vehicle or a part only (see **Airbags and pretensioners: Recycling - Destruction**) .

FRONT SIDE AIRBAG

Tightening torques ▽	
side airbag nuts	**10 N.m**

The front (chest level) side airbag is mounted on the back of each front seat at the door side.

When it inflates, the airbag tears open the cover of the module and the foam and unclips the seat cover.

IMPORTANT
Consult the safety and cleanliness advice and operation recommendations before carrying out any repair (see **88C**, **Air bag and Pretensioners**, **Airbag and pretensioners: Precautions for the repair**, page **88C-3**) .

REMOVAL

I - REMOVAL PREPARATION OPERATION

❑

IMPORTANT
To avoid any risk of triggering when working on or near a pyrotechnic component (airbags or pretensioners), lock the airbag computer using the diagnostic tool.

When this function is activated, all the trigger lines are inhibited and the airbag warning light on the instrument panel lights up continuously (ignition on).

IMPORTANT
Never handle the pyrotechnic systems (pretensioners or airbags) near to a source of heat or naked flame - they may be triggered.

❑ Lock the airbag computer (see **Fault finding - Replacement of components**) (88C, Airbags and pretensioners).

❑ Switch off the ignition.

❑ Disconnect the battery (see **80A**, **Battery**, **Battery: Removal - Refitting**, page **80A-2**) .

❑ Remove:

- the complete front seat (see **Complete front seat: Removal - Refitting**) (75A, Front seat frames and runners),
- the front seat back trim (see **Front seatback trim: Removal - Refitting**) (77A, Front seat trim).

II - OPERATION FOR REMOVAL OF PART CONCERNED

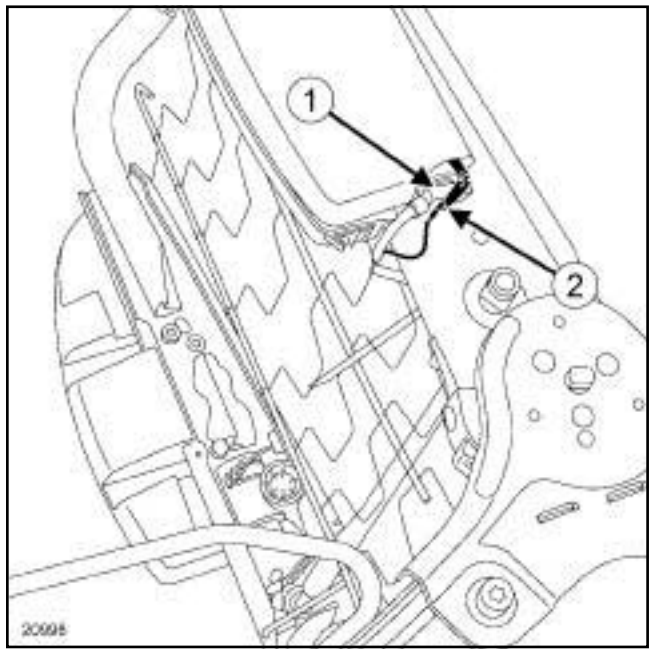

20998

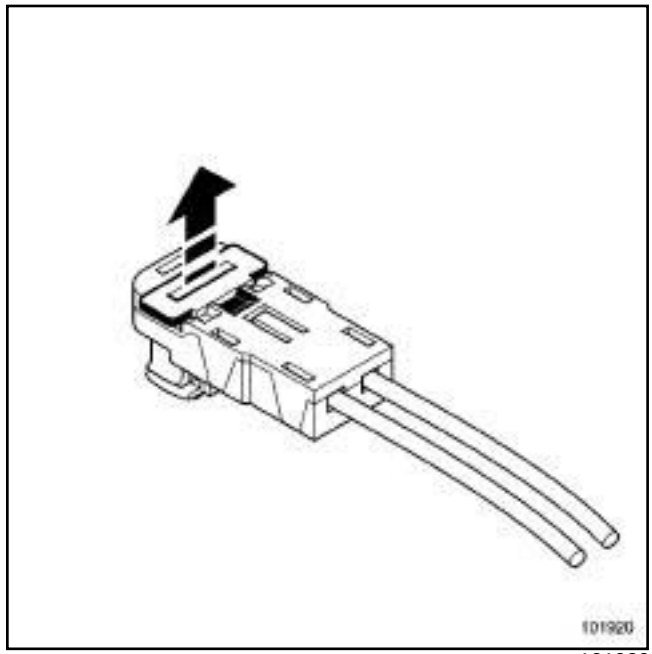

101920

❑ Disconnect:

- the front side airbag connector (**1**) by unclipping the safety cover,
- the earth terminal (**2**) .

FRONT SIDE AIRBAG

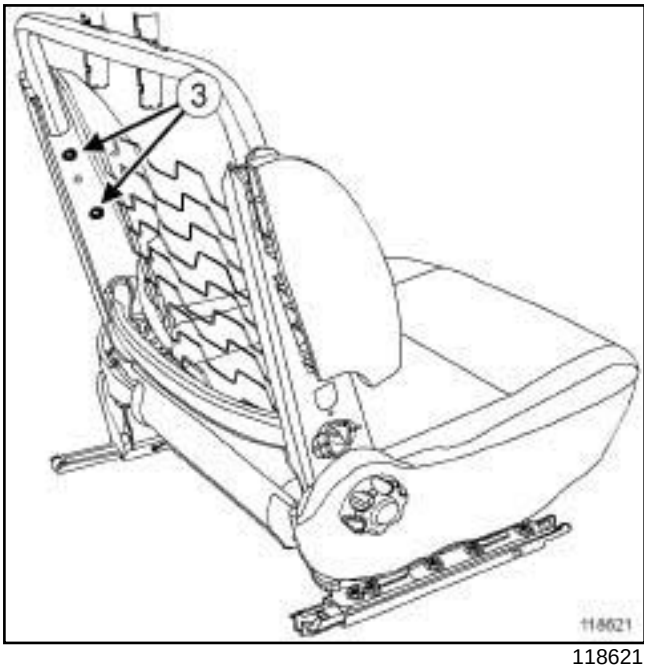

118621

❑ Remove:

- the front side airbag nuts (**3**) ,
- the front side airbag.

REFITTING

I - REFITTING PREPARATION OPERATION

❑

> **IMPORTANT**
> After a seat belt pyrotechnic component is triggered, it is essential to replace certain parts.
> (see **88C**, **Air bag and Pretensioners**, **Airbag and pretensioners: Precautions for the repair**, page **88C-3**) .

❑ Always replace the nuts for the front chest-level airbag.

II - REFITTING OPERATION FOR PART CONCERNED

❑ Refit:

- the front chest-level side airbag,
- the new nuts of the front side airbag.

❑ Torque tighten the **side airbag nuts (10 N.m)**.

> **IMPORTANT**
> To prevent the airbag triggering, connect the earth wire before the igniter connector.

❑ Connect:

- the earth terminal,
- the front side airbag connector.

III - FINAL OPERATION

❑ Refit:

- the front seat back trim (see **Front seatback trim: Removal - Refitting**) (77A, Front seat trim),
- the complete front seat (see **Complete front seat: Removal - Refitting**) (75A, Front seat frames and runners).

❑ Connect the battery (see **80A**, **Battery**, **Battery: Removal - Refitting**, page **80A-2**) .

> **IMPORTANT**
> To avoid a fault with or even triggering of pyrotechnic components (airbags or pretensioners), check the airbag computer using the diagnostic tool.

❑ Unlock the airbag computer (see **Fault finding - Replacement of components**) (88C, Airbag and pretensioners).

> **IMPORTANT**
> To eliminate the risk of any accident, do not reuse pyrotechnic components.
> It is essential to destroy pretensioners or airbags before scrapping a vehicle or a part only.

(see **Airbags and pretensioners: Recycling - Destruction**) .

FRONT SIDE AIRBAG

Tightening torques ▽	
side impact sensor bolt	**8 N.m**

IMPORTANT
Consult the safety and cleanliness advice and operation recommendations before carrying out any repair (see **88C**, **Air bag and Pretensioners**, **Airbag and pretensioners: Precautions for the repair**, page **88C-3**) .

REMOVAL

I - REMOVAL PREPARATION OPERATION

❑

IMPORTANT
To avoid any risk of triggering when working on or near a pyrotechnic component (airbags or pretensioners), lock the airbag computer using the diagnostic tool.

When this function is activated, all the trigger lines are inhibited and the airbag warning light on the instrument panel lights up continuously (ignition on).

❑ Lock the airbag computer (see **Fault finding - Replacement of components**) (88C, Airbags and pretensioners).

❑ Switch off the ignition.

❑ Disconnect the battery (see **80A**, **Battery**, **Battery: Removal - Refitting**, page **80A-2**) .

❑ Remove the B-pillar trim (see **B-pillar trim: Removal - Refitting**) (71A, Body internal trim).

II - OPERATION FOR REMOVAL OF PART CONCERNED

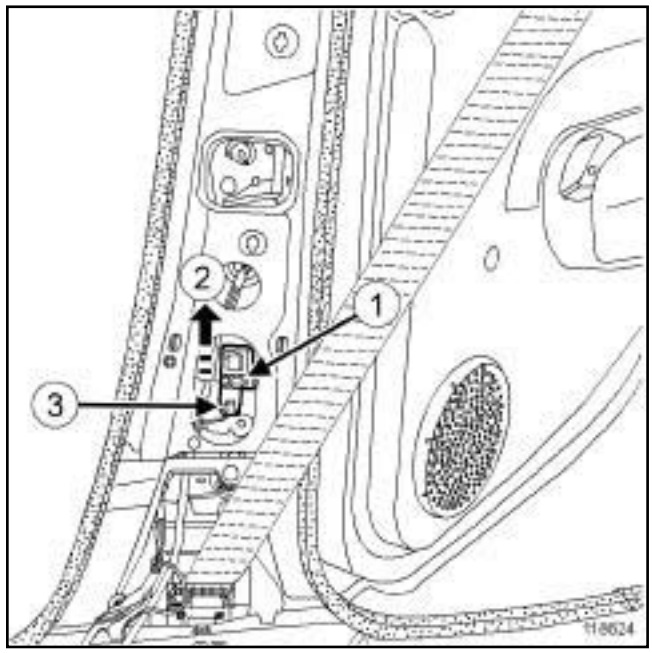

118624

❑ Loosen the side impact sensor bolt (**1**) by 6 turns.

❑ Remove the side impact sensor from its housing at (**2**) .

❑ Disconnect the connector (**3**) from the side impact sensor.

REFITTING

I - REFITTING PREPARATION OPERATION

❑ **parts always to be replaced: Side impact sensors**

II - REFITTING OPERATION FOR PART CONCERNED

❑ Connect the side impact sensor connector.

❑ Fit the side impact sensor.

❑ Torque tighten the **side impact sensor bolt (8 N.m)**.

III - FINAL OPERATION

❑ Refit the B-pillar trim (see **B-pillar trim: Removal - Refitting**) (71A, Body internal trim).

FRONT SIDE AIRBAG

- Connect the battery (see **80A**, **Battery**, **Battery: Removal - Refitting**, page **80A-2**) .

> **IMPORTANT**
> To avoid a fault with or even triggering of pyrotechnic components (airbags or pretensioners), check the airbag computer using the diagnostic tool.

- Unlock the airbag computer (see **Fault finding - Replacement of components**) (88C, Airbag and pretensioners).

Tightening torques ▽	
the buckle nut	**25 N.m**

REMOVAL

I - REMOVAL PREPARATION OPERATION

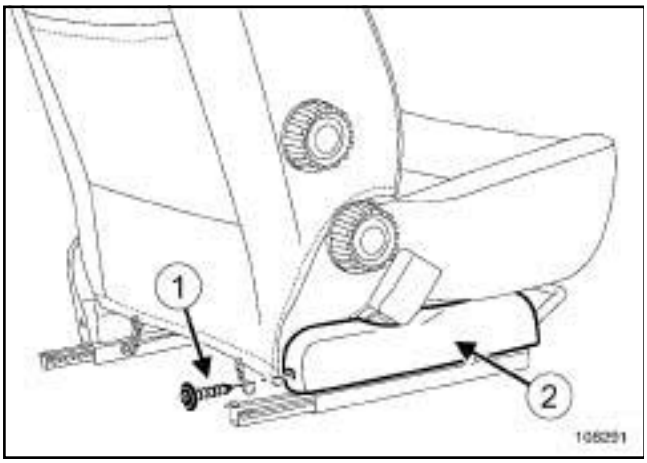

108291

❑ Remove:

- the bolt (**1**) ,
- the casing (**2**) .

II - OPERATION FOR REMOVAL OF PART CONCERNED

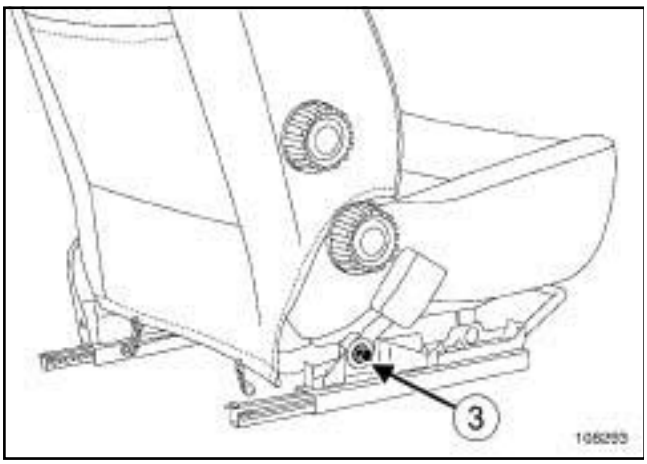

108293

❑ Remove:

- the nut (**3**) ,
- the seat belt buckle.

REFITTING

I - REFITTING PREPARATION OPERATION

❑ Coat the threads of the front seat belt buckle bolts with **HIGH STRENGTH THREAD LOCK** (see **Vehicle: Parts and consumables for the repair**) (MR 388, 04B, Parts and consumables).

II - REFITTING OPERATION FOR PART CONCERNED

❑ Refit the buckle nut.

❑ Torque tighten **the buckle nut (25 N.m)**.

III - FINAL OPERATION

❑ Refit:

- the casing
- the cover bolt.

Tightening torques ▽	
bolts of the rear seat belt stalks	**21 N.m**

REMOVAL

I - REMOVAL PREPARATION OPERATION

❏ Remove the single unit rear bench seat base (see) .

REAR BENCH SEAT

❏ Remove the single unit rear bench seatback (see) .

REAR BENCH FUNCTION

❏ Remove the 1/3 or 2/3 rear bench seatback (see)

II - REMOVAL OPERATION

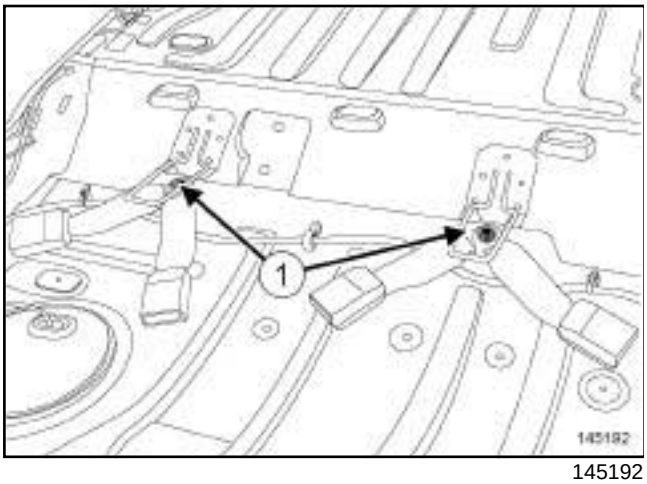

145192

❏ Remove:

- the bolts (**1**) ,
- the stalks of the rear seat belts.

REFITTING

I - REFITTING PREPARATION OPERATION

❏ Coat the threads of the rear seat belt stalk bolts using **HIGH STRENGTH THREAD LOCK** (see **Vehicle: Parts and consumables for the repair**) (04B, Consumables - Products).

II - REFITTING OPERATION

❏ Proceed in the reverse order to removal.

❏ Torque tighten the **bolts of the rear seat belt stalks (21 N.m)**.

Equipment required
Diagnostic tool

Tightening torques ▽	
bolts of the height adjustment mechanism	**21 N.m**
inertia reel bolt	**21 N.m**
bolt of the seat belt return mechanism	**21 N.m**
bolt of the seat belt lower mounting	**21 N.m**

IMPORTANT
To avoid all risk of damage to the systems, apply the safety and cleanliness instructions and operation recommendations before carrying out any repair (see **88C**, **Air bag and Pretensioners**, **Airbag and pretensioners: Precautions for the repair**, page **88C-3**) .

IMPORTANT
Never handle the pyrotechnic systems (pretensioners or airbags) near to a source of heat or naked flame - they may be triggered.

IMPORTANT
To eliminate the risk of any accident, do not reuse pyrotechnic components.

It is essential to destroy pretensioners or airbags before scrapping a vehicle or a part only (see **Airbags and pretensioners: Recycling - Destruction**) .

Note:

The seat belt must be handled by the inertia reel mechanism (risk of damaging the strap).

REMOVAL

I - REMOVAL PREPARATION OPERATION

WITH FRONT PRETENSIONER

❑

IMPORTANT
To avoid any risk of triggering when working on or near a pyrotechnic component (airbags or pretensioners), lock the airbag computer using the diagnostic tool.

When this function is activated, all the trigger lines are inhibited and the airbag warning light on the instrument panel lights up continuously (ignition on).

❑ Lock the airbag computer using the **Diagnostic tool** (see **Fault finding - Replacement of components**) (88C, Airbags and pretensioners).

❑ Switch off the ignition.

❑ Disconnect the battery (see **80A**, **Battery**, **Battery: Removal - Refitting**, page **80A-2**) .

II - OPERATION FOR REMOVAL OF PART CONCERNED

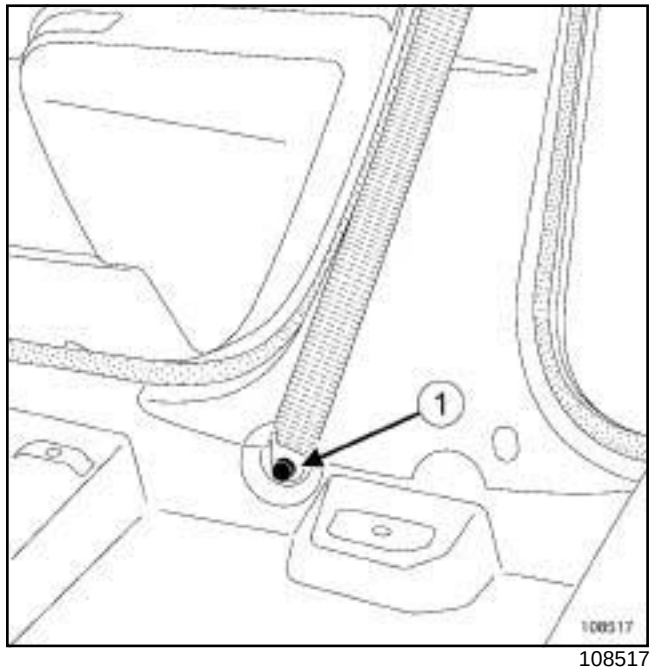

108517

❑ Remove:

- the cover of the seat belt lower bolt,
- the seat belt lower bolt (**1**) .

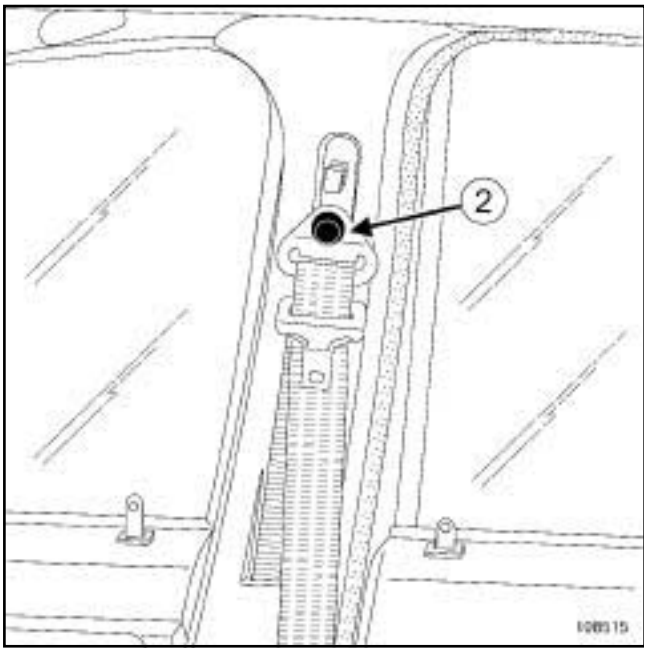

108515

❑ Remove:

- the cover of the seat belt upper bolt,
- the seat belt upper bolt (**2**) .

❑ Remove the lower B-pillar trim (see **B-pillar trim: Removal - Refitting**) (71A, Body internal trim).

WITH FRONT PRETENSIONER

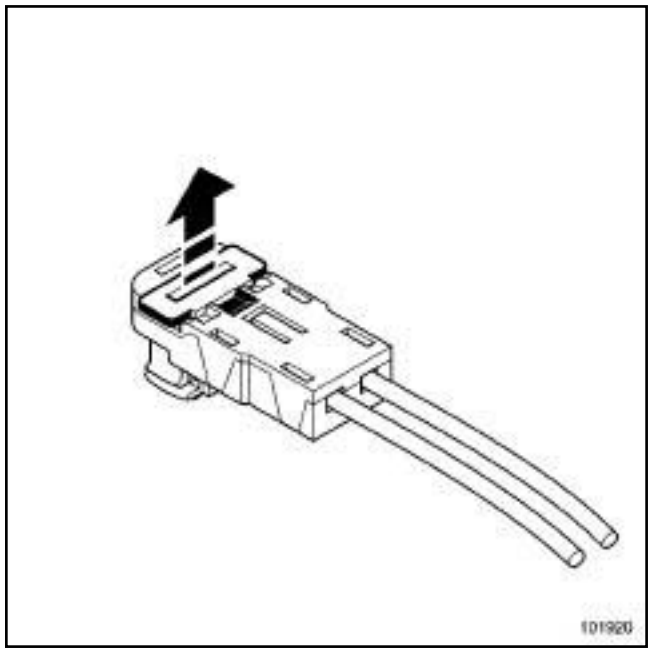

101920

❑

WARNING

To prevent any risk of noise, premature wear, short circuits, etc. after the refitting operation, mark the wiring routing and how to connect the connectors.

Mark the wiring routing at the front side seat belt inertia reel.

❑ Unclip the inertia reel connector safety clip.

❑ Disconnect the inertia reel connector.

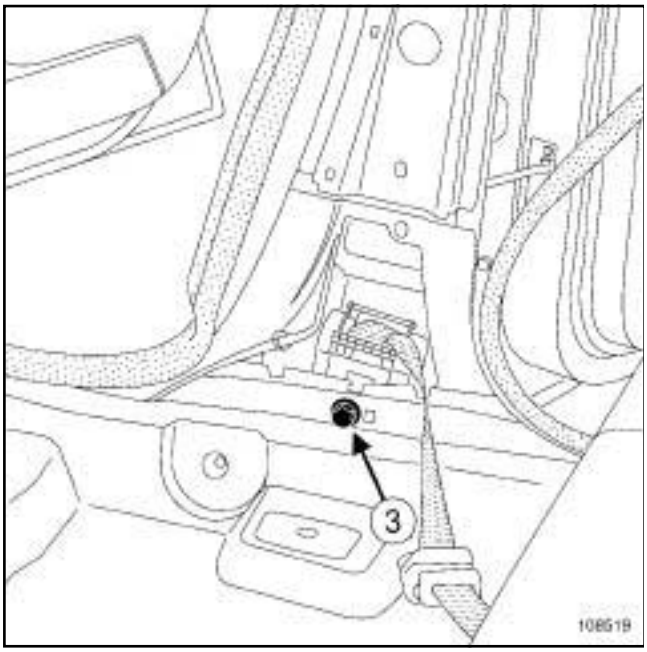

108519

❑ Remove:

- the bolt (**3**) from the inertia reel,
- the inertia reel.

❑ Remove the height adjustment mechanism (depending on the vehicle equipment).

REFITTING

I - REFITTING PREPARATION OPERATION

❑ **parts always to be replaced: Front seat belt inertia reel bolt**

❑ Always replace the return mechanism bolts and the lower mounting bolts of the front side seat belt.

II - REFITTING OPERATION FOR PART CONCERNED

❑ Refit the height adjustment mechanism (depending on the vehicle equipment).

❑ Torque tighten the **bolts of the height adjustment mechanism (21 N.m)**.

❑ Refit:

- the inertia reel,
- the inertia reel bolt.

❑ Tighten to torque the **inertia reel bolt (21 N.m)**.

WITH FRONT PRETENSIONER

❑ Refit the wiring at the front side seat belt inertia reel in the position marked during removal

❑ Connect the inertia reel connector.

❑ Clip on the inertia reel connector safety clip.

❑ Refit:

- the B-pillar trim (see **B-pillar trim: Removal - Refitting**) (71A, Body internal trim),

❑

> Note:
>
> Check that the seat belt is not twisted between the inertia reel and the front side seat belt return mechanism.

Refit the front side seat belt return mechanism

❑ Torque tighten the **bolt of the seat belt return mechanism (21 N.m)**

❑

> Note:
>
> Check that the seat belt is not twisted between the front side seat belt return mechanism and the front side seat belt lower mounting.

Refit the lower mounting for the front side seat belt.

❑ Torque tighten the **bolt of the seat belt lower mounting (21 N.m)**.

❑ Refit:

- the cover of the seat belt upper bolt,
- the cover of the seat belt lower bolt.

III - FINAL OPERATION

WITH FRONT PRETENSIONER

- Connect the battery (see **80A**, **Battery**, **Battery: Removal - Refitting**, page **80A-2**) .

> **IMPORTANT**
> To avoid a fault with or even triggering of pyrotechnic components (airbags or pretensioners), check the airbag computer using the diagnostic tool.

- Unlock the airbag computer using the **Diagnostic tool** (see **Fault finding - Replacement of components**) (88C, Airbags and pretensioners).

> **IMPORTANT**
> To eliminate the risk of any accident, do not reuse pyrotechnic components.
>
> It is essential to destroy pretensioners or airbags before scrapping a vehicle or a part only (see **Airbags and pretensioners: Recycling - Destruction**) .

IV - CHECKING AFTER REPAIR

- Check the correct operation by unrolling the front side seat belt by 300 mm and letting it return twice
- Check that the front side seat belt locks correctly by pulling the front side seat belt strap with increasing speed 200 to 300 mm maximum until the inertia reel locks.

WITH FRONT PRETENSIONER

- Switch on the ignition.
- Check that there are no faults on the instrument panel.

Tightening torques ▽	
rear side seat belt bolts	**21 N.m**

REMOVAL

I - REMOVAL PREPARATION OPERATION

❑ Remove (see) :

- the rear bench seat base,
- the rear side seat belt lower bolt,
- the single unit rear bench seatback.

❑ Remove the parcel shelf structure trim (see **Interior body side trim assembly: Exploded view**) .

II - REMOVAL OPERATION

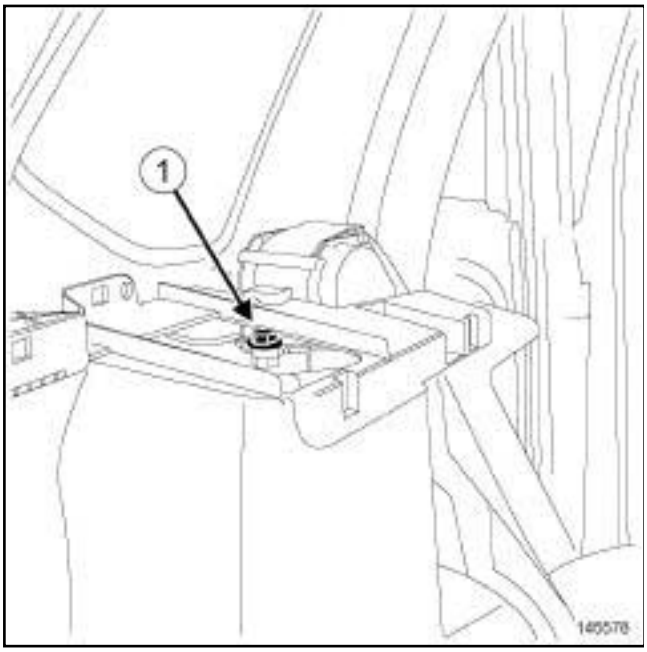

145578

❑ Remove:

- the rear side seat belt inertia reel bolt (**1**) ,
- the rear side seat belt.

REFITTING

I - REFITTING PREPARATION OPERATION

❑ Coat the threads of the side seat belt bolts using **HIGH STRENGTH THREAD LOCK** (see **Vehicle: Parts and consumables for the repair**) (04B, Consumables - Products).

II - REFITTING OPERATION

❑ Proceed in the reverse order to removal.

❑ Torque tighten the **rear side seat belt bolts (21 N.m)**.

Tightening torques ▽	
rear centre seat belt bolt	**21 N.m**
rear centre seat belt guide bolt	**21 N.m**
seat belt return mechanism bolt	**21 N.m**

REMOVAL

REMOVAL PREPARATION OPERATION

2-POINT MIDDLE/REAR SEAT BELT

❑ Remove:

- the single unit rear bench seat base (see **Single unit rear bench seat base: Removal - Refitting**) (76A, Rear seat frames and runners),
- the 1/3 or 2/3 rear bench seatback (see **1/3 and 2/3 rear bench seatback: Removal - Refitting**) (76A, Rear seat frames and runners) or the single unit rear bench seatback (see **Single unit rear bench seatback: Removal - Refitting**) (76A, Rear seat frames and runners).

3-POINT MIDDLE/REAR SEAT BELT

❑ Pull down the 2/3 rear bench seatback (see **1/3 and 2/3 rear bench seatback: Removal - Refitting**) (76A, Rear seat frames and runners) or the single unit rear bench seatback (see **Single unit rear bench seatback: Removal - Refitting**) (76A, Rear seat frames and runners).

❑ Remove the rear quarter panel trim (see **Quarter panel trim: Removal - Refitting**) (71A, Body internal trim).

OPERATION FOR REMOVAL OF PART CONCERNED

2-POINT MIDDLE/REAR SEAT BELT

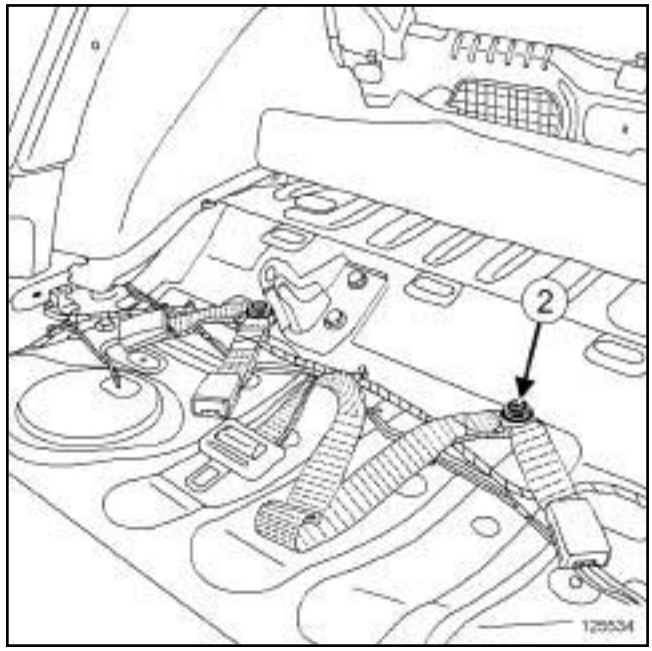

125534

❑ Remove:

- the rear centre seat belt bolt (**2**) ,
- the rear centre seat belt.

3-POINT MIDDLE/REAR SEAT BELT

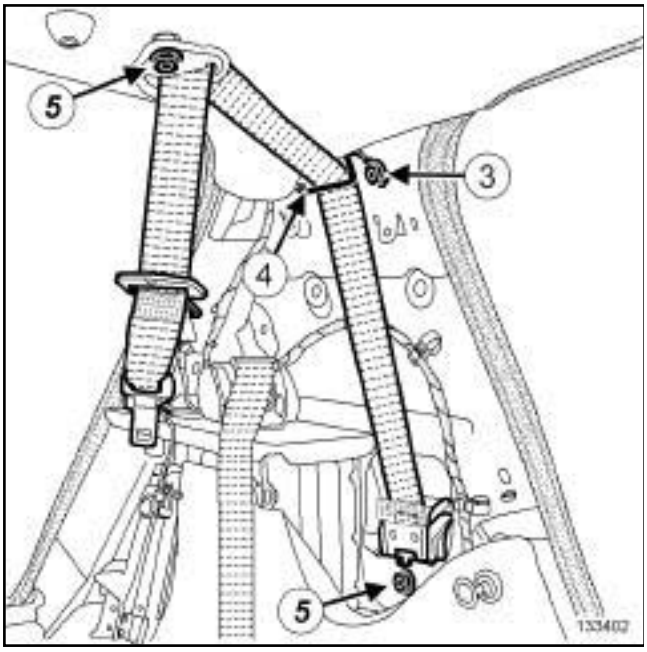

133402

❑ Remove:

- the rear centre seat belt guide bolt (**3**) ,
- the rear centre seat belt guide (**4**) ,
- the rear centre seat belt bolts (**5**) ,
- the rear centre seat belt.

REFITTING

I - REFITTING PREPARATION OPERATION

3-POINT MIDDLE/REAR SEAT BELT

❑ **parts always to be replaced: rear centre seat belt mounting**

❑ Coat the threads of the rear centre seat belt return mechanism bolts with **HIGH STRENGTH THREAD LOCK** (see **Vehicle: Parts and consumables for the repair**) (04B, Parts and consumables).

2-POINT MIDDLE/REAR SEAT BELT

❑ **parts always to be replaced: rear centre seat belt mounting**

II - REFITTING OPERATION FOR PART CONCERNED

❑ Refit:

- the rear centre seat belt,
- the rear centre seat belt bolt.

❑ Torque tighten the **rear centre seat belt bolt (21 N.m)**.

3-POINT MIDDLE/REAR SEAT BELT

❑

> Note:
>
> Check that the seat belt is not twisted between the inertia reel and the rear centre seat belt return mechanism.

❑ Refit:

- the rear centre seat belt guide,
- the rear centre seat belt guide bolt.

❑ Torque tighten the **rear centre seat belt guide bolt (21 N.m)**.

❑ Refit the rear centre seat belt return mechanism.

❑ Torque tighten the **seat belt return mechanism bolt (21 N.m)**.

III - FINAL OPERATION

2-POINT MIDDLE/REAR SEAT BELT

❑ Refit:

- the 1/3 or 2/3 rear bench seatback (see **1/3 and 2/3 rear bench seatback: Removal - Refitting**) (76A, Rear seat frames and runners) or the single unit rear bench seatback (see **Single unit rear bench seatback: Removal - Refitting**) (76A, Rear seat frames and runners),

- the single unit rear bench seat base (see **Single unit rear bench seat base: Removal - Refitting**) (76A, Rear seat frames and runners).

3-POINT MIDDLE/REAR SEAT BELT

❏ Refit the rear quarter panel trim (see **Quarter panel trim: Removal - Refitting**) (71A, Body internal trim).

❏ Fit the 2/3 rear bench seatback (see **1/3 and 2/3 rear bench seatback: Removal - Refitting**) (76A, Rear seat frames and runners) or the single unit rear bench seatback (see **Single unit rear bench seat-back: Removal - Refitting**) (76A, Rear seat frames and runners).

WITH SEAT BELT NOT SECURED WARNING or ALOUCP

REMOVAL

REMOVAL OPERATION

❏ Switch off the ignition.

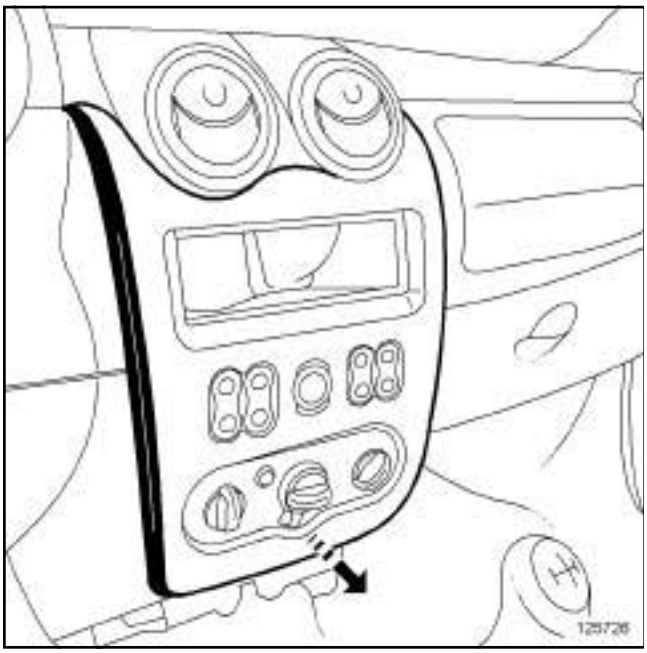

125726

❏ Unclip the central trim starting at the bottom.

❏ Remove the dashboard central trim.

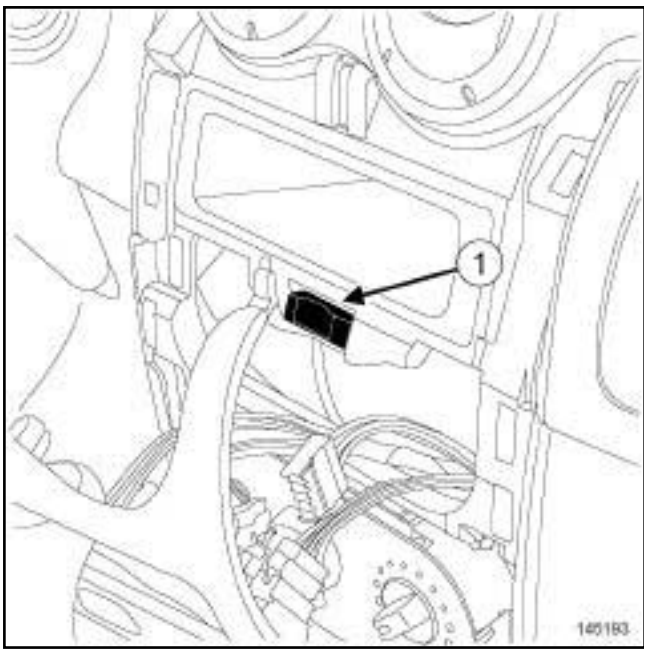

145193

❏ Unclip the seat belt reminder warning light (**1**) .

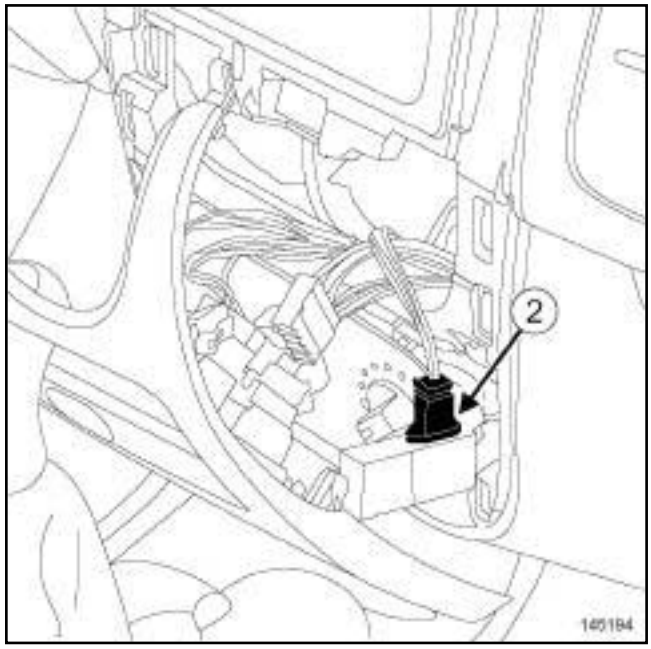

145194

❏ Disconnect the connector from the seat belt reminder warning light (**2**) .

REFITTING

REFITTING OPERATION

❏ Proceed in the reverse order to removal.

CHECKING AFTER REPAIR

❏ Switch on the ignition.

❏ Check that the seat belt reminder warning light illuminates.

❏ Fasten the seat belts.

❏ Check that the warning light goes out.

DUSTER

8 Electrical equipment

80D LIGHTING

UCH
Vdiag No.: 09

Fault finding – Introduction	80D - 2
Fault finding – List and location of components	80D - 4
Fault finding – Role of components	80D - 5
Fault finding – Function	80D - 6
Fault finding – Configuration	80D - 8
Fault finding – Conformity check	80D - 9
Fault finding – Status summary table	80D - 11
Fault finding – Interpretation of statuses	80D - 12
Fault finding – Command summary table	80D - 21
Fault finding – Interpretation of commands	80D - 22
Fault finding – Customer complaints	80D - 28
Fault finding – Fault Finding Chart	80D - 29

V1 **Edition Anglaise**

"The repair procedures given by the manufacturer in this document are based on the technical specifications current when it was prepared.

The procedures may be modified as a result of changes introduced by the manufacturer in the production of the various component units and accessories from which his vehicles are constructed."

All rights reserved by Renault s.a.s.

Copying or translating, in part or in full, of this document or use of the service part reference numbering system is forbidden without the prior written authority of Renault s.a.s.

© Renault s.a.s. 2009

1. SCOPE OF THIS DOCUMENT

This document presents the fault finding method applicable to all computers with the following specifications:

Vehicle(s): **DUSTER**
Function concerned: **LIGHTING**

*Name of computer:***UCH**
Vdiag No.: **09**

2. PREREQUISITES FOR FAULT FINDING

Documentation type
Fault finding procedures (this document):
– Assisted fault finding (integrated into the **diagnostic tool**), Dialogys.
Wiring Diagrams:
– Visu-Schéma.

Type of diagnostic tools

– CLIP

Special tooling required

Special tooling required:	
	Diagnostic tool
	Multimeter
Elé. 1622	Bornier
Elé. 1681	Universal bornier

If the information obtained by the fault finding tool requires the electrical continuity to be checked, connect bornier Elé. 1622 or universal bornier Elé. 1681.

WARNING:
– All tests with bornier **Elé. 1622** or **Elé. 1681** must be conducted with the battery disconnected.
– The bornier is only designed to be used with a multimeter. Never power the test points with **12 V**.

3. SAFETY INSTRUCTIONS

The safety instructions must be followed at all times when working on components, to avoid damage or injury:
– check the battery voltage to avoid incorrect operation of computer functions,
– use the appropriate tools

LIGHTING

Fault finding – List and location of components

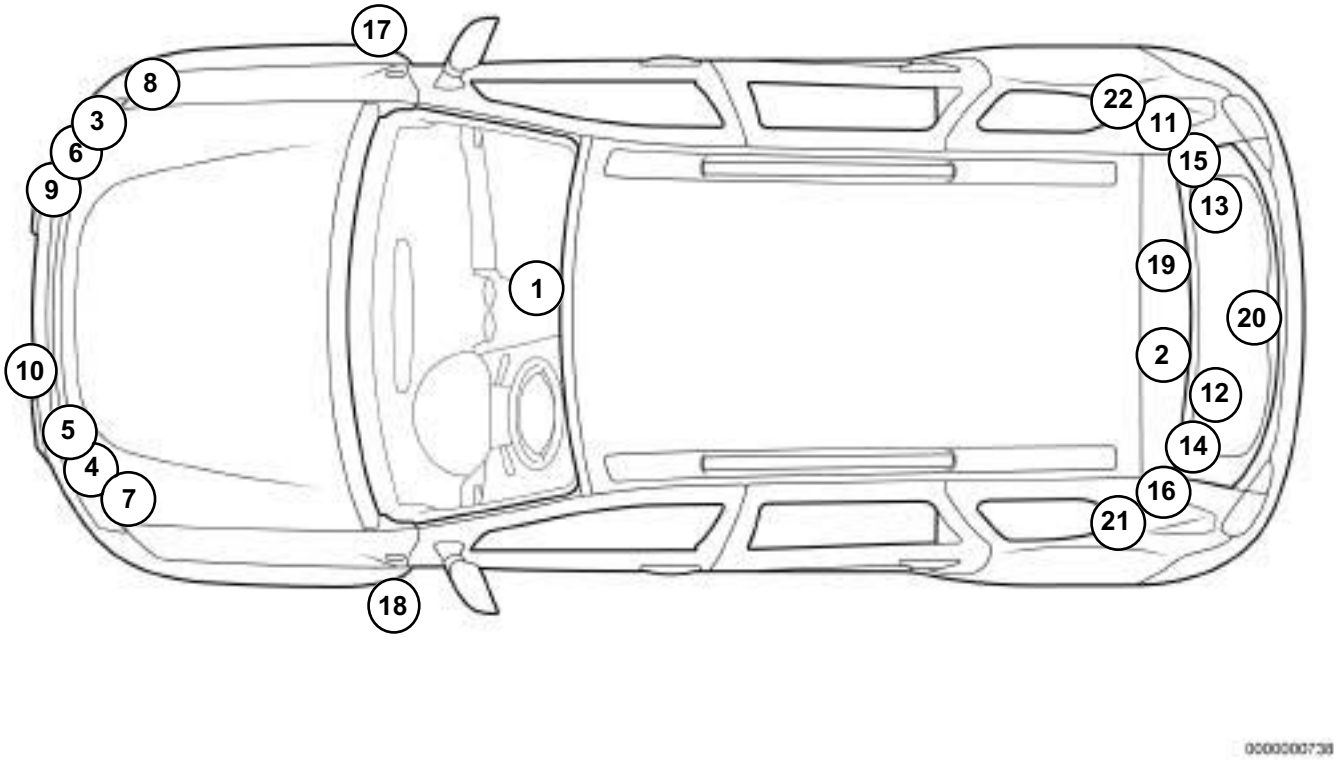

1- interior lights	12- left-hand reversing light
2- luggage compartment lighting	13- rear right-hand side light
3- right-hand side light	14- rear left-hand side light
4- left-hand side light	15- right-hand brake light
5- left-hand dipped headlight	16- left-hand brake light
6- right-hand dipped headlight	17- right-hand side-mounted indicator
7- front left-hand indicator light	18- left-hand side-mounted indicator
8- front right-hand indicator light	19- high-level brake light
9- front right-hand fog light	20- number plate light
10- front left-hand fog light	21- rear left-hand indicator light
11- rear right-hand fog light	22- rear right-hand indicator light

Side lights:
The side lights are switched on directly using the lighting stalk, via the passenger compartment fuse box.
This function lights all the side lights (front and rear) as well as the number plate lighting.

Dipped headlights:
The dipped beam headlights are switched on directly using the lighting stalk, via the passenger compartment fuse box.
This function lights only the two bulbs providing the dipped headlights function.

Main beam headlights:
The main beam headlights are switched on directly using the lighting stalk, via the passenger compartment fuse box.
This function lights only the two bulbs providing the main beam headlights function.

Rear fog lights:
The rear fog light is switched on directly using the lighting stalk, via the passenger compartment fuse box.
This function lights only the rear fog lights.

Hazard warning lights:
The "hazard warning lights illumination request" signal from the hazard warning lights switch is sent to the UCH, which controls the hazard warning lights.
This function lights only the hazard warning lights.

Indicators:
The "left-hand or right-hand indicators illumination request" signal initiated by the driver using the lighting stalk is sent to the UCH, which controls the left-hand and right-hand indicators.

Layout of the lighting function

The interior lighting function (courtesy lights, air conditioning indicator light, central door locking indicator light, etc.) and the signalling function are provided by the UCH computer. This computer is connected via a wire connection.
The UCH interprets the driver's intention via the steering column switch, then transmits the lighting requests.
These requests are controlled by the UCH.
The exterior lighting is controlled directly by the steering column switch.

The LIGHTING function is divided into two sub-functions: **lighting control and lighting power**.
This function is managed directly, without the intervention of the UCH.

1. Lighting control

Operated by the driver
The UCH receives the driver's request via the steering column switches and the hazard warning lights button.
View the statuses of the available commands (see Status summary table).

2. Lighting power

The UCH manages the supply to the interior lighting, the heating and air conditioning system indicator lights, and the central locking indicator lights.
The UCH manages the supply to the indicators.
The functioning of the lights supplied by the UCH can be checked using the actuator commands **AC022 Left-hand indicator, AC023 Right-hand indicator, and AC145 Front courtesy lights**.

Equipment required:
CLIP diagnostic tool

Configurations of the lighting function in the UCH

– Configuration available on **diagnostic tool SC008, with the associated configuration reading**:

Configuration	Configuration reading	Name of configuration	Option	Configuration
CF054	**LC009**	**Hazard warning lights illuminated upon impact**	**WITH** or **WITHOUT**	**SC008 UCH type** (See **87B, Passenger compartment connection unit)**
CF063	**LC047**	**Timed courtesy light**	**WITH** or **WITHOUT**	
CF072	**LC168**	**Courtesy light timer**	**AUTHORISE D or PROHIBITED**	

Check the configurations in the **Read configurations** menu

NOTES	Only carry out this conformity check after a complete check using the **diagnostic tool**. The values shown in this conformity check are given as a guide. Test conditions: **Engine stopped, ignition on**.

SUB-FUNCTION: LIGHTING CONTROL

Function	Parameter or status Checked or action		Display and notes	Fault finding
Lighting control	**ET324**	Side lights request	**"PRESENT" or "ABSENT"**	**In the event of an inconsistency**, apply the interpretation of status **ET324**.
	ET485	Hazard warning lights signal	**"PRESENT" or "ABSENT"**	**In the event of an inconsistency**, apply the interpretation of status **ET485**.
	ET084	Right-hand indicator request	**"PRESENT" or "ABSENT"**	**In the event of an inconsistency**, apply the interpretation of status **ET084**.
	ET083	Left-hand indicator request	**"PRESENT" or "ABSENT"**	**In the event of an inconsistency**, apply the interpretation of status **ET083**.

NOTES	Only carry out this conformity check after a complete check using the **diagnostic tool**. The values shown in this conformity check are given as a guide. Test conditions: **Engine stopped, ignition on**.

SUB-FUNCTION: LIGHTING CONTROL (CONTINUED)

Function	Parameter or status Checked or action		Display and notes	Fault finding
Lighting control	**AC023**	Right-hand indicator	This command is used to activate the right-hand indicators.	**In the event of a fault**, apply the interpretation of command **AC023**.
	AC022	Left-hand direction indicator	This command is used to activate the left-hand indicators.	**In the event of a fault**, apply the interpretation of command **AC022**.
	AC145	Front courtesy lights	This command is used to illuminate the front courtesy light.	**In the event of a fault**, apply the interpretation of command **AC145**.

Fault finding – Status summary table

Tool status	Diagnostic tool title
ET083	Left-hand indicator request
ET084	Right-hand indicator request
ET324	Side lights request
ET485	Hazard warning lights signal

ET083	LEFT-HAND INDICATOR REQUEST

STATUS DEFINITION	**PRESENT** when the left-hand indicator is switched on. **ABSENT** if there is no request for the left-hand indicator.

NOTES	There must be no **present** or **stored** faults. Switch on the ignition. Activate the left-hand indicator lights control using the lighting stalk. The status should be **PRESENT**.
	Special note: Use the **Wiring Diagrams Technical Note for DUSTER**.

Check the connection and condition of the indicator lighting stalk connector, component code **209** and the UCH connector, component code **645**. If the connectors are faulty and if there is a repair procedure (see **Technical Note 6015A (Renault) or Technical Note 9804A (Dacia), Electrical wiring repair, Wiring: Precautions for repair**), repair the connector, otherwise replace the wiring.
Check for **earth** on connection **MAM** of component **209**. If the connection is faulty and if there is a repair procedure (see **Technical Note 6015A (Renault) or Technical Note 9804A (Dacia), Electrical wiring repair, Wiring: Precautions for repair**), repair the wiring, otherwise replace it.

AFTER REPAIR	Carry out another fault finding check on the system. Deal with any other faults. Clear the **stored** faults.

ET083 CONTINUED	

Check the operation of the indicator lighting stalk in the left-hand indicator position: Check the **continuity** between connections **64T** and **MAM**.
Disconnect the left-hand indicator connector from the UCH. Check the **insulation, continuity**, and the **absence of interference resistance** on the following connections: • **64T** between components **209** and **645**. • **MAM** between component **209** and **earth**. If the connections are faulty and if there is a repair procedure (see **Technical Note 6015A (Renault) or Technical Note 9804A (Dacia), Electrical wiring repair, Wiring: Precautions for repair**), repair the wiring, otherwise replace it.
If the earth and the connections are correct, replace the lighting stalk, component code **209** (see **MR 451 Mechanical, 84A, Controls - Signals, Signals lighting switch: Removal - Refitting).**
If the fault is still present, contact the Techline.

AFTER REPAIR	Carry out another fault finding check on the system. Deal with any other faults. Clear the **stored** faults.

ET084	RIGHT-HAND INDICATOR REQUEST

STATUS DEFINITION	**PRESENT** when the right-hand indicator is switched on. **ABSENT** if there is no request for the right-hand indicator.

NOTES	There must be no **present** or **stored** faults. Switch on the ignition. Activate the left-hand indicator lights control using the lighting stalk. The status should be **PRESENT**.
	Special note: Use the **Wiring Diagrams Technical Note for DUSTER**.

Check the connection and condition of the lighting stalk connector, component code **209** and the UCH connector, component code **645**. If the connectors are faulty and if there is a repair procedure (see **Technical Note 6015A (Renault) or Technical Note 9804A (Dacia), Electrical wiring repair, Wiring: Precautions for repair**), repair the connector, otherwise replace the wiring.
Check for **earth** on connection **MAM** of component **209**. If the connection is faulty and if there is a repair procedure (see **Technical Note 6015A (Renault) or Technical Note 9804A (Dacia), Electrical wiring repair, Wiring: Precautions for repair**), repair the wiring, otherwise replace it.
Check the operation of the lighting stalk, component code **209** in the right-hand indicator position: Check the **continuity** between connections **64S** and **MAM**.

AFTER REPAIR	Carry out another fault finding check on the system. Deal with any other faults. Clear the **stored** faults.

ET084 CONTINUED	

Disconnect the right-hand indicator connector from the UCH.
Check the **insulation, continuity**, and the **absence of interference resistance** on the following connections:
- **64S** between components **209** and **645**.
- **MAM** between component **209** and **earth**.

If the connections are faulty and if there is a repair procedure (see **Technical Note 6015A (Renault) or Technical Note 9804A (Dacia), Electrical wiring repair, Wiring: Precautions for repair**), repair the wiring, otherwise replace it.

If the earth and the connections are correct, replace the lighting stalk, component code **209** (see **MR 451 Mechanical, 84A, Controls - Signals, Signals lighting switch: Removal - Refitting).**

If the fault is still present, contact the Techline.

AFTER REPAIR	Carry out another fault finding check on the system. Deal with any other faults. Clear the **stored** faults.

ET324	SIDE LIGHTS REQUEST

STATUS DEFINITION	**PRESENT** when the side lights are switched on. **ABSENT** if there is no request for the side lights.

NOTES	There must be no **present** or **stored** faults. Move the side lights switch. The status should be **PRESENT** and the side lights illuminated.
	Special note: Use the **Wiring Diagrams Technical Note for DUSTER**.

Check the presence and condition of fuses **F18 (10 A)** and **F19 (10 A)** on the passenger compartment fuse box, component code **1016, and fuses F1 (60 A)** and **F2 (60 A)** on the engine fuse and relay box, component code **597** (see **MR 451 Mechanical, 81C, Fuses, Fuses: List and location of components**).
Check the connection and the condition of the connector of the engine fuse and relay box, component code **597**, the UCH computer, component code **645**, and the lighting stalk, component code **209**. If the connector is faulty and there is a repair procedure (see **Technical Note 6015A (Renault) or Technical Note 9804A (Dacia), Electrical wiring repair, Wiring: Precautions for repair**), repair the connector, otherwise replace the wiring.
Check for **+12 V** on connections **BP13 and BP11** of component **209**. If the connections are faulty and if there is a repair procedure (see **Technical Note 6015A (Renault) or Technical Note 9804A (Dacia), Electrical wiring repair, Wiring: Precautions for repair**), repair the wiring, otherwise replace it.

AFTER REPAIR	Carry out another fault finding check on the system. Deal with any other faults. Clear the **stored** faults.

ET324 CONTINUED 1	

Check between the lighting stalk and the engine fuse and relay box:
Check the continuity and insulation of the following connections:
- **BP11** between components **209 and 597**,
- **BP13** between components **209 and 597**,

If the connections are faulty and if there is a repair procedure (see **Technical Note 6015A (Renault) or Technical Note 9804A (Dacia), Electrical wiring repair, Wiring: Precautions for repair**), repair the wiring, otherwise replace it.

Check for **+12 V** (when side lights are requested) on the following connection:
- **LPG** of component **645** for right-hand drive
- **LPD** of component **645** for left-hand drive

If the connections are faulty and if there is a repair procedure (see **Technical Note 6015A (Renault) or Technical Note 9804A (Dacia), Electrical wiring repair, Wiring: Precautions for repair**), repair the wiring, otherwise replace it.

Check the **continuity and the insulation** of the following connections:
- **LPG** between components **1016** and **645** for right-hand drive
- **LPD** between components **1016** and **645** for left-hand drive
- **L** between components **1016** and **209**

If the connections are faulty and if there is a repair procedure (see **Technical Note 6015A (Renault) or Technical Note 9804A (Dacia), Electrical wiring repair, Wiring: Precautions for repair**), repair the wiring, otherwise replace it.

AFTER REPAIR	Carry out another fault finding check on the system. Deal with any other faults. Clear the **stored** faults.

ET324 CONTINUED 2	

Check for **+12 V** (when side lights are requested) on the following connection:
- **L** of component **209**

If the connections are faulty and if there is a repair procedure (see **Technical Note 6015A (Renault) or Technical Note 9804A (Dacia), Electrical wiring repair, Wiring: Precautions for repair**), repair the wiring, otherwise replace it.

If the feeds and the connections are correct, replace the lighting stalk, component code **209** (see **MR 451 Mechanical, 84A, Controls - Signals, Signals lighting switch: Removal - Refitting).**

If the fault is still present, contact the Techline.

AFTER REPAIR	Carry out another fault finding check on the system. Deal with any other faults. Clear the **stored** faults.

ET485	HAZARD WARNING LIGHTS SIGNAL

STATUS DEFINITION	**PRESENT** when the hazard warning lights are switched on. **ABSENT** if there is no request for the hazard warning lights.

NOTES	There must be no **present** or **stored** faults. Activate the hazard warning lights switch using the button. The status should be **PRESENT**.
	Special note: Use the **Wiring Diagrams Technical Note for DUSTER**.

Check the connection and condition of the hazard warning lights switch connector, component code **125**. If the connector is faulty and there is a repair procedure (see **Technical Note 6015A (Renault) or Technical Note 9804A (Dacia), Electrical wiring repair, Wiring: Precautions for repair**), repair the connector, otherwise replace the wiring.
Check for **earth** on connection **MAN** of component **125**. If the connection is faulty and if there is a repair procedure (see **Technical Note 6015A (Renault) or Technical Note 9804A (Dacia), Electrical wiring repair, Wiring: Precautions for repair**), repair the wiring, otherwise replace it.
Check the operation of the hazard warning lights control. Check **the continuity** between the following connections **MAN** and **64Q** of component **125**: If the connections are faulty and if there is a repair procedure (see **Technical Note 6015A (Renault) or Technical Note 9804A (Dacia), Electrical wiring repair, Wiring: Precautions for repair**), repair the wiring, otherwise replace it.

AFTER REPAIR	Carry out another fault finding check on the system. Deal with any other faults. Clear the **stored** faults.

ET485 CONTINUED	

Check the **insulation, continuity**, and the **absence of interference resistance** on the following connections:
- **64Q** between components **125** and **645.**
- **MAN** between component **125** and **earth** .

If the connections are faulty and if there is a repair procedure (see **Technical Note 6015A (Renault) or Technical Note 9804A (Dacia), Electrical wiring repair, Wiring: Precautions for repair**), repair the wiring, otherwise replace it.

If the fault is still present, contact the Techline.

AFTER REPAIR	Carry out another fault finding check on the system. Deal with any other faults. Clear the **stored** faults.

Tool commands	Diagnostic tool title	Comments
AC022	Left-hand direction indicator	This command is used to activate the left-hand indicator.
AC023	Right-hand indicator	This command is used to activate the right-hand indicator.
AC145	Front courtesy lights	This command is used to activate the front courtesy lights.

AC022	LEFT-HAND INDICATOR

NOTES	This command is used to activate the left-hand indicator. There must be no **present** or **stored** faults. Switch on the ignition.
	Special note: Use the **Wiring Diagrams Technical Note for DUSTER**.

Check the condition of the left-hand indicator light bulb. Replace the bulb if necessary (see **MR 451 Mechanical, 80B, Headlights, Side indicator: Removal - Refitting**).
Check the connection and condition of the connector of the UCH, component code **645**, the rear left-hand light, component code **173**, the left-hand headlight, component code **227**, and the left-hand repeater, component code **268**. If the connectors are faulty and if there is a repair procedure (see **Technical Note 6015A (Renault) or Technical Note 9804A (Dacia), Electrical wiring repair, Wiring: Precautions for repair**), repair the connector, otherwise replace the wiring.
Check for **earth** on the following connections: • **MB** of component **227**, • **MB** of component **268**, • **MG** of component **173**. If the connections are faulty and if there is a repair procedure (see **Technical Note 6015A (Renault) or Technical Note 9804A (Dacia), Electrical wiring repair, Wiring: Precautions for repair**), repair the wiring, otherwise replace it.

AFTER REPAIR	Carry out a road test, followed by a check with the **diagnostic tool**.

UCH_V09_AC022

AC022 CONTINUED	

Check the **continuity**, **insulation** and **absence of interference resistance** on the following connections:
- **64C** between components **645** and **173**,
- **64C** between components **645** and **227**,
- **64C** between components **645** and **268**,
- **MB** between component **268** and **earth**,
- **MB** between component **227** and **earth**,
- **MG** between component **173** and **earth**,

If the connections are faulty and if there is a repair procedure (see **Technical Note 6015A (Renault) or Technical Note 9804A (Dacia), Electrical wiring repair, Wiring: Precautions for repair**), repair the wiring, otherwise replace it.

If the fault is still present, contact the Techline.

AFTER REPAIR	Carry out a road test, followed by a check with the **diagnostic tool**.

AC023	RIGHT-HAND INDICATOR

NOTES	This command is used to activate the right-hand indicator. There must be no **present** or **stored** faults. Switch on the ignition.
	Special note: Use the **Wiring Diagrams Technical Note for DUSTER**.

Check the condition of the right-hand indicator light bulb. Replace the bulb if necessary (see **MR 451 Mechanical, 80B, Headlights, Side indicator: Removal - Refitting**).
Check the connection and condition of the connector of the UCH, component code **645**, the rear right-hand light, component code **172**, the right-hand headlight, component code **226**, and the right-hand repeater, component code **267**. If the connectors are faulty and if there is a repair procedure (see **Technical Note 6015A (Renault) or Technical Note 9804A (Dacia), Electrical wiring repair, Wiring: Precautions for repair**), repair the connector, otherwise replace the wiring.
Check for **earth** on the following connections: • **MA** of component **226**, • **MA** of component **267**, • **MF** of component **172.** If the connections are faulty and if there is a repair procedure (see **Technical Note 6015A (Renault) or Technical Note 9804A (Dacia), Electrical wiring repair, Wiring: Precautions for repair**), repair the wiring, otherwise replace it.

AFTER REPAIR	Carry out a road test, followed by a check with the **diagnostic tool**.

AC023 CONTINUED	

Check the **continuity**, **insulation and absence of interference resistance** on the following connections:
- **64D** between components **645** and **172**,
- **64D** between components **645** and **226**,
- **64D** between components **645** and **267**,
- **MA** between component **267** and **earth**,
- **MA** between component **226** and **earth**,
- **MF** between component **172** and **earth**,

If the connections are faulty and if there is a repair procedure (see **Technical Note 6015A (Renault) or Technical Note 9804A (Dacia), Electrical wiring repair, Wiring: Precautions for repair**), repair the wiring, otherwise replace it.

If the fault is still present, contact the Techline.

AFTER REPAIR	Carry out a road test, followed by a check with the **diagnostic tool**.

AC145	FRONT COURTESY LIGHTS

NOTES	This command is used to activate the front courtesy light. There must be no **present** or **stored** faults. Switch on the ignition.
	Special note: Use the **Wiring Diagrams Technical Note for DUSTER**.

Check the correct operation of the courtesy light in the **ON** position and the condition of the front courtesy light bulb, component code **213**. Replace the bulb if necessary (see **MR 451 Mechanical, 81B, Interior lighting, Courtesy light: Removal - Refitting**).

Check for **+12 V** on the front courtesy light, component code **213** on the following connection:

- **BPT** of component **213.**

Check **the continuity and insulation** of the following connection:
BPT between components **213** and **645**.
If the connection or connections are faulty and there is a repair procedure (see **Technical Note 6015A, Electrical wiring repair, Wiring: Precautions for repair**), repair the wiring, otherwise replace it.

AFTER REPAIR	Carry out a road test, followed by a check with the **diagnostic tool**.

AC145 CONTINUED	

Check for **earth** on the front courtesy light, component code **213** on the following connection:
- **MAM** of component **213**.

Check **the continuity and insulation** of the following connection:
MAM between component **213** and **earth**.
If the connection or connections are faulty and there is a repair procedure (see **Technical Note 6015A, Electrical wiring repair, Wiring: Precautions for repair**), repair the wiring, otherwise replace it.

Put the courtesy light in the **AUTO** position and run command **AC145**.

Check **the continuity, insulation** and **the absence of interference resistance** of the following connection:
- **13A** or **13E** between components **645** and **213**.

If the connection or connections are faulty and there is a repair procedure (see **Technical Note 6015A, Electrical wiring repair, Wiring: Precautions for repair**), repair the wiring, otherwise replace it.

If the fault is still present, contact the Techline.

AFTER REPAIR	Carry out a road test, followed by a check with the **diagnostic tool**.

NOTES	Only consult these customer complaints after a complete check with the diagnostic tool.

LIGHTING

No side lights	ALP2
No dipped headlights	ALP3
No main beam headlights	ALP4
No front fog lights	ALP5
No rear fog light	ALP6
The glovebox light does not work	ALP7
The luggage compartment lights do not work	ALP8
The brake lights operate erratically	ALP9
The brake lights are still illuminated and the brake light switch is released	ALP10
The reversing light operates erratically	ALP11
The flashing light of the hazard warning lights control button does not work	ALP12
The backlighting of the hazard warning lights control button operates erratically	ALP 13
The front fog lights are always illuminated	ALP14
The timed courtesy light does not work	ALP15

ALP 2	No side lights

NOTES	Only consult this customer complaint after a full check with the **diagnostic tool**. There must be no **present** or **stored** faults. Check the conformity of status **ET324 Side lights request**. If not correct, refer to the interpretation of this status.
	Special note: Use the **Wiring Diagrams Technical Note for DUSTER**.

Check the condition of the bulbs. Replace the bulbs if they are defective (see **MR 451 Mechanical, 81A, Rear lighting, Rear light bulb: Removal - Refitting**).
Check the presence and condition of fuses **F18 (10 A)** and **F19 (10 A)** on component **1016.** Replace the fuse if the check is not correct.
Check the condition and connection of the connectors of the left-hand headlight, component code **227**, the rear left-hand light, component code **173**, the right-hand headlight, component code **226**, the rear right-hand light, component code **172**, the right-hand number plate light, component code **166**, the left-hand number plate light, component code **167**, and the lighting stalk, component code **209**. If the connector is faulty and there is a repair procedure (see **Technical Note 6015A (Renault) or Technical Note 9804A (Dacia), Electrical wiring repair, Wiring: Precautions for repair**), repair the connector, otherwise replace the wiring.
Check for **+12 V** (when side lights are requested) on the following connections: • **LPD** of components **226 and 172**, • **LPG** of components **227 and 173** . Check for **earth** on the following connections: • **MB** of component **227**, • **MG** of component **173**, • **MA** of component **226**, • **MF** of component **172.** If the connections are faulty and if there is a repair procedure (see **Technical Note 6015A (Renault) or Technical Note 9804A (Dacia), Electrical wiring repair, Wiring: Precautions for repair**), repair the wiring, otherwise replace it.

AFTER REPAIR	Check the system operation.

ALP 2 CONTINUED 1	

Side lights check:
Check **the continuity and insulation** of the following connections:
Front left-hand side light:
- **LPG** between components **227** and **1016**,
- **MB** between component **227** and **earth**,

Rear left-hand side light:
- **LPG** between components **173** and **1016**,
- **MG** between component **173** and **earth**,

Front right-hand side light:
- **LPD** between components **226** and **1016**,
- **MA** between component **226** and **earth**,

AFTER REPAIR	Check the system operation.

ALP 2 CONTINUED 2	

Rear right side light:
- **LPD** between components **172** and **1016**,
- **MF** between component **172** and **earth**,

Right-hand number plate light:
- **LPD** between components **166** and **1016**,
- **MF** between component **166** and **earth**,

Left-hand number plate light:
- **LPD** between components **167** and **1016**,
- **MG** between component **167** and **earth**,

If the connections are faulty and if there is a repair procedure (see **Technical Note 6015A (Renault) or Technical Note 9804A (Dacia), Electrical wiring repair, Wiring: Precautions for repair**), repair the wiring, otherwise replace it.

If the fault is still present, contact the Techline.

AFTER REPAIR	Check the system operation.

ALP 3	No dipped headlights

NOTES	Only consult this customer complaint after a full check with the **diagnostic tool**. There must be no **present** or **stored** faults. Check the conformity of status **ET324 Side lights request**. If not correct, refer to the interpretation of this status.
	Special note: Use the **Wiring Diagrams Technical Note for DUSTER**.

Put the lighting stalk, component code **209** in the dipped headlights position.
Check the presence and condition of the supply fuse of the left-hand headlight, component code **227**: • **F09 (10 A)** on component **1016**, Replace the fuse(s) if the checks are not correct (see **MR 451 Mechanical, 81C, Fuses, Fuses: List and location of components**).
Check the presence and condition of the supply fuse of the right-hand headlight, component code **226**: • **F10 (10 A)** on component **1016**, Replace the fuse(s) if the checks are not correct (see **MR 451 Mechanical, 81C, Fuses, Fuses: List and location of components**).
Check the condition of the bulbs. Replace the bulbs if they are defective (see **MR 451 Mechanical, 80B, Front lighting: List and location of components**).

AFTER REPAIR	Check the system operation.

ALP 3 CONTINUED 1	

Check the **condition** and **connection** of the connectors of the left-hand headlight, component code **227**, the right-hand headlight, component code **226**, and the lighting stalk, component code **209**.
If the connectors are faulty and if there is a repair procedure (see **Technical Note 6015A, Repairing electrical wiring, Wiring: Precautions for repair),** repair the connector, otherwise replace the wiring.

Check for **+12 V** (when the dipped headlights are requested) on the following connections:
- **CPG** of component **227**,
- **CPD** of component **226** .

Check for **earth** on the following connections:
- **MB** of component **227**,
- **MA** of component **226**.

If the connections are faulty and if there is a repair procedure (see **Technical Note 6015A (Renault) or Technical Note 9804A (Dacia), Electrical wiring repair, Wiring: Precautions for repair**), repair the wiring, otherwise replace it.

AFTER REPAIR	Check the system operation.

ALP 3 CONTINUED 2	

Check **the continuity and insulation** of the following connections:
- **CDO** between components **209** and **1016**.

Front right-hand dipped beam headlight:
- **CPG** between components **227** and **1016**,
- **MB** between component **227** and **earth**,

Front right-hand dipped beam headlight:
- **CPD** between components **226** and **1016**.
- **MA** between component **226** and **earth**,

If the connection or connections are faulty and there is a repair procedure (see **Technical Note 6015A, Electrical wiring repair, Wiring: Precautions for repair**), repair the wiring, otherwise replace it.

With the dipped headlights control activated, check for **+12 V** on connection **CDO** of the lighting stalk, component code **209**.
If not correct, replace the lighting stalk **(**see **MR451 Mechanical 84A, Control - Signals, - Lighting - signals switch: Removal - Refitting)**

If the fault is still present, contact the Techline.

AFTER REPAIR	Check the system operation.

ALP 4	No main beam headlights

NOTES	Only address this customer complaint after a **complete check** with **the diagnostic tool**. There must be no **present** or **stored** faults. Check the conformity of status **ET324 Side lights request**. If not correct, refer to the interpretation of this status.
	Special note: Use the **Wiring Diagrams Technical Note for DUSTER**.

Put the lighting stalk, component code **209** in the main beam headlights position.
Check the presence and condition of the supply fuse of the left-hand headlight, component code **227**: • **F11 (10 A)** on component **1016**, Replace the fuse(s) if the checks are not correct (see **MR 451 Mechanical, 81C, Fuses, Fuses: List and location of components**).
Check the presence and condition of the supply fuse of the right-hand headlight, component code **226**: • **F12 (10 A)** on component **1016**, Replace the fuse(s) if the checks are not correct (see **MR 451 Mechanical, 81C, Fuses, Fuses: List and location of components**).
Check the condition of the bulbs. Replace the bulbs if they are defective (see **MR 451 Mechanical, 80B, Front lighting: List and location of components**).

AFTER REPAIR	Check the system operation.

ALP 4 CONTINUED 1	

Check the **condition** and **connection** of the connectors of the left-hand headlight, component code **227**, the right-hand headlight, component code **226**, and the lighting stalk, component code **209**.
If the connectors are faulty and if there is a repair procedure (see **Technical Note 6015A, Repairing electrical wiring, Wiring: Precautions for repair),** repair the connector, otherwise replace the wiring.

Check for **+12 V** (when the dipped headlights are requested) on the following connections:
- **RPG** of component **227**,
- **RPD** of component **226** .

Check for **earth** on the following connections:
- **MB** of component **227**,
- **MA** of component **226**.

If the connections are faulty and if there is a repair procedure (see **Technical Note 6015A (Renault) or Technical Note 9804A (Dacia), Electrical wiring repair, Wiring: Precautions for repair**), repair the wiring, otherwise replace it.

AFTER REPAIR	Check the system operation.

ALP 4 CONTINUED 2	

Check the **continuity, insulation** and **absence of interference resistance** on the following connections:
- **R** between components **209** and **1016**.

Front left-hand main beam headlight:
- **RPG** between components **227** and **1016**,
- **MB** between component **227** and **earth**,

Front right-hand main beam headlight:
- **RPD** between components **226** and **1016**.
- **MA** between component **226** and **earth**,

If the connection or connections are faulty and there is a repair procedure (see **Technical Note 6015A, Electrical wiring repair, Wiring: Precautions for repair**), repair the wiring, otherwise replace it.

With the main beam headlights control activated, check for **+12 V** on connection **R** of the lighting stalk, component code **209**.
If not correct, replace the lighting stalk (see **MR 451 Mechanical 84A, Control - Signals, - Lighting - signals switch: Removal - Refitting**)

If the fault is still present, contact the Techline.

AFTER REPAIR	Check the system operation.

ALP 5	No front fog lights

NOTES	
	Only consult this customer complaint after a full check with the **diagnostic tool**. There must be no **present** or **stored** faults. Check the conformity of status **ET324 Side lights request**. If not correct, refer to the interpretation of this status.
	Special note: Use the **Wiring Diagrams Technical Note for DUSTER**.

Check the condition of the bulbs. Replace the bulbs if they are defective (see **MR 451 Mechanical, 80B, Front headlight, Front fog light bulb: Removal - Refitting**).
Check the presence and condition of the front fog light relay (component code **231**) and **fuse F31 (15 A)**. Replace the relay and the fuse if the check is not correct.
Check the condition and connection of the connectors of the front fog light relay, component code **231**, the front right-hand fog light, component code **176**, the front left-hand fog light, component code **177**, and the lighting stalk, component code **209**, If the connector is faulty and there is a repair procedure (see **Technical Note 6015A (Renault) or Technical Note 9804A (Dacia), Electrical wiring repair, Wiring: Precautions for repair**), repair the connector, otherwise replace the wiring.
Check for **+12 V** (when the front fog lights are requested) on the following connection: • **8FB** of components **176 and 177**, Check for **earth** on the following connection: • **MB** of components **176 and 177**, If the connections are faulty and if there is a repair procedure (see **Technical Note 6015A (Renault) or Technical Note 9804A (Dacia), Electrical wiring repair, Wiring: Precautions for repair**), repair the wiring, otherwise replace it.

AFTER REPAIR	Check the system operation.

ALP 5 CONTINUED 1	

Front fog lights check:
Check **the continuity and insulation** of the following connections:

Right-hand front fog light:
- **8B** between components **231** and **176**,

Left-hand front fog light:
- **8B** between components **231** and **177**,

If the connections are faulty and if there is a repair procedure (see **Technical Note 6015A (Renault) or Technical Note 9804A (Dacia), Electrical wiring repair, Wiring: Precautions for repair**), repair the wiring, otherwise replace it.

AFTER REPAIR	Check the system operation.

ALP 5 CONTINUED 2	

Check for **+12 V** (when the front fog lights are requested) on the following connections:
- **8A** of component **231**,
- **BP16** of component **231**,

Check for **earth** on the following connection:
- **MB** of component **231**,

If the connections are faulty and if there is a repair procedure (see **Technical Note 6015A (Renault) or Technical Note 9804A (Dacia), Electrical wiring repair, Wiring: Precautions for repair**), repair the wiring, otherwise replace it.

Front fog lights relay check:
Check the continuity and insulation of the following connections:
- **8A** between components **209** and **231**,
- **BP16** between components **231** and **1016**.

If the connections are faulty and if there is a repair procedure (see **Technical Note 6015A (Renault) or Technical Note 9804A (Dacia), Electrical wiring repair, Wiring: Precautions for repair**), repair the wiring, otherwise replace it.

Check for **+12 V** on the following connections:
- **BP11** of component **209**,
- **BP13** of component **209**,

If the connections are faulty and if there is a repair procedure (see **Technical Note 6015A (Renault) or Technical Note 9804A (Dacia), Electrical wiring repair, Wiring: Precautions for repair**), repair the wiring, otherwise replace it.

AFTER REPAIR	Check the system operation.

ALP 5 CONTINUED 3	

Check between the lighting stalk and the engine fuse and relay box: Check the **insulation and the continuity** of the following connections: • **BP11** between components **209 and 597**, • **BP13** between components **209 and 597**, If the connections are faulty and if there is a repair procedure (see **Technical Note 6015A (Renault) or Technical Note 9804A (Dacia), Electrical wiring repair, Wiring: Precautions for repair**), repair the wiring, otherwise replace it.
If the supplies and the connections are correct, replace the lighting stalk.
If the fault is still present, contact the Techline.

AFTER REPAIR	Check the system operation.

ALP 6	No rear fog light

NOTES	Only address this customer complaint after a **complete check** with **the diagnostic tool**. There must be no **present** or **stored** faults. Check the conformity of status **ET324 Side lights request**. If not correct, refer to the interpretation of this status.
	Special note: Use the **Wiring Diagrams Technical Note for DUSTER**.

Put the lighting stalk, component code **209** in the rear fog lights position.
Check the presence and condition of fuse **F20 (7.5 A)** on the passenger compartment fuse box, component code **1016**. Replace the fuse(s) if the checks are not correct (see **MR 451 Mechanical, 81C, Fuses, Fuses: List and location of components**).
Check the condition of the bulb. Replace the bulb if it is defective (see **MR 451 Mechanical, 80B, Rear lighting: List and location of components**).
Check the **condition** and **connection** of the connectors of the rear left-hand light, component code **173** for a left-hand drive vehicle, the rear right-hand light, component code **172** for a right-hand drive vehicle, and the lighting stalk, component code **209**. If the connectors are faulty and if there is a repair procedure (see **Technical Note 6015A, Repairing electrical wiring, Wiring: Precautions for repair),** repair the connector, otherwise replace the wiring.

AFTER REPAIR	Check the system operation.

UCH_V09_ALP6

ALP 6 CONTINUED 1	

Check for **+12 V** (when the rear fog lights are requested) on the following connections:
- **9P** of component **172** for a right-hand drive vehicle,
- **9P** of component **173** for a left-hand drive vehicle,

Check for **earth** on the following connection:
- **MF** of component **172** for a right-hand drive vehicle**,**
- **MG** of component **173** for a left-hand drive vehicle,

If the connections are faulty and if there is a repair procedure (see **Technical Note 6015A (Renault) or Technical Note 9804A (Dacia), Electrical wiring repair, Wiring: Precautions for repair**), repair the wiring, otherwise replace it.

Check **the continuity and insulation** of the following connections:

- **9J** between components **209** and **1016**.
- **9P** between components **172** and **1016** (for a right-hand drive vehicle),
- **9P** between components **173** and **1016** (for a left-hand drive vehicle),
- **MF** between components **172** and **earth** (for a right-hand drive vehicle),
- **MG** between components **173** and **earth** (for a left-hand drive vehicle),

If the connection or connections are faulty and there is a repair procedure (see **Technical Note 6015A, Electrical wiring repair, Wiring: Precautions for repair**), repair the wiring, otherwise replace it.

AFTER REPAIR	Check the system operation.

ALP 6 CONTINUED 2	

With the rear fog lights control activated, check for **+12 V** on connection **9J** of the lighting stalk, component code **209**. If not correct, replace the lighting stalk (see **MR 451 Mechanical 84A, Control - Signals, - Lighting - signals switch: Removal - Refitting**)
If the fault is still present, contact the Techline.

AFTER REPAIR	Check the system operation.

ALP 7	The glovebox light does not work

NOTES	Only address this customer complaint after a **complete check** with **the diagnostic tool**. Put the lighting stalk, component code **209** in the side lights position. There must be no **present** or **stored** faults. Check the conformity of status **ET324 Side lights request**. If not correct, refer to the interpretation of this status.
	Special note: Use the **Wiring Diagrams Technical Note for DUSTER**.

Check the condition of the passenger glovebox light and the bulb.
Replace the passenger glovebox light and the bulb if necessary (see **MR 451 Mechanical, 81B, Interior lighting, Glovebox light: Removal - Refitting**).

Check the **condition** and **connection** of the connectors of the passenger glovebox light, component code **168** and the passenger glovebox switch, component code **161**.
If the connectors are faulty and if there is a repair procedure (see **Technical Note 6015A, Repairing electrical wiring, Wiring: Precautions for repair),** repair the connector, otherwise replace the wiring.

Check for **+12 V** on the passenger glovebox light, component code **168** on the following connection:
- **LPG** of component **168** (for a right-hand drive vehicle),
- **LPD** of component **168** (for a left-hand drive vehicle).

Check the **continuity** of the following connection:
- **LPG** between components **1016** and **168** (for a right-hand drive vehicle),
- **LPD** between components **1016** and **168** (for a left-hand drive vehicle).

If the connection or connections are faulty and there is a repair procedure (see **Technical Note 6015A, Electrical wiring repair, Wiring: Precautions for repair**), repair the wiring, otherwise replace it.

AFTER REPAIR	Check the system operation.

ALP 7 CONTINUED	

Check for **earth** on the passenger glovebox switch, component code **161** on the following connection: • **MAN** of component **161**. If the connection is faulty and there is a repair procedure (see **Technical Note 6015A, Electrical wiring repair, Wiring: Precautions for repair**), repair the wiring, otherwise replace it.
Check **the continuity and insulation** of the following connection: • **17A** between components **168** and **161**, If the connection or connections are faulty and there is a repair procedure (see **Technical Note 6015A, Electrical wiring repair, Wiring: Precautions for repair**), repair the wiring, otherwise replace it.
Check for correct operation of the passenger glovebox switch, component code **161**. Check the **continuity** between connections **17A** and **MAN** of the passenger glovebox switch. If not correct, ensure the conformity of the switch.
If the fault is still present, contact the Techline.

AFTER REPAIR	Check the system operation.

ALP 8	The luggage compartment light does not work

NOTES	
	Only consult this customer complaint after a full check with the **diagnostic tool**. There must be no **present** or **stored** faults.
	Special note: Use the **Wiring Diagrams Technical Note for DUSTER**.

For mid-range and high-end versions (SOP02 and SOP03)

Close the rear doors of the vehicle and open the tailgate and check that **ET 551** is **OPEN**. If not, deal with **ET 551** (see **87B, Passenger compartment connection unit**).
Check that the left-hand luggage compartment light, component code **165** is illuminated. If not, check the condition of the left-hand luggage compartment bulb, component code **165**. Replace the left-hand luggage compartment bulb if necessary (see **MR 451 Mechanical, 81B, Interior lighting, Luggage compartment light: Removal - Refitting**).
Run command **AC145** to illuminate the bulb. If not correct, check the condition and connection of the connectors of the UCH, component code **645** and the luggage compartment light, component code **165**. If the connector(s) are faulty and there is a repair procedure (see Technical Note **6015A, Repairing electrical wiring, Wiring: Precautions for repair**), repair the connector, otherwise replace the wiring.

AFTER REPAIR	Check the system operation.

UCH_V09_ALP8

ALP 8 CONTINUED 1	

Check for **+12 V** on the luggage compartment light, component code **165** on the following connection:
- **BPT** of component 165.

Check the continuity and insulation of the following connection:
- **BPT** between components **645** and **165**.

If the connection or connections are faulty and there is a repair procedure (see **Technical Note 6015A, Electrical wiring repair, Wiring: Precautions for repair**), repair the wiring, otherwise replace it.

Check **the continuity, insulation** and **the absence of interference resistance** of the following connection:
- **13E** between components **645** and **165**.

If the connection is faulty and there is a repair procedure (see **Technical Note 6015A, Electrical wiring repair, Wiring: Precautions for repair**), repair the wiring, otherwise replace it.

If the fault is still present, contact the Techline.

AFTER REPAIR	Check the system operation.

ALP 8 CONTINUED 2	

For the entry-level version (SOP01)

Check the presence and condition of the supply fuses of the luggage compartment light, component code **165**:

- **F28 (15 A)** on component **1016**,

Replace the fuses if the checks are not correct.

Check that the left-hand luggage compartment light, component code **165** is illuminated.
If not, check the condition of the left-hand luggage compartment bulb, component code **165**. Replace the left-hand luggage compartment bulb if necessary (see **MR 451 Mechanical, 81B, Interior lighting, Luggage compartment light: Removal - Refitting**).

Check the **condition** and **connection** of the connectors of the luggage compartment light, component code **165** and the tailgate lock, component code **1322**.
If the connectors are faulty and if there is a repair procedure (see **Technical Note 6015A, Repairing electrical wiring, Wiring: Precautions for repair),** repair the connector, otherwise replace the wiring.

Check for +12 V on the luggage compartment light, component code **165** on the following connection:
- **BC** of component **165**.

Check **the continuity and insulation** of the following connection:
BC between components **1016** and **165**.
If the connection or connections are faulty and there is a repair procedure (see **Technical Note 6015A, Electrical wiring repair, Wiring: Precautions for repair**), repair the wiring, otherwise replace it.

AFTER REPAIR	Check the system operation.

ALP 8 CONTINUED 3	

Check for **earth** on the tailgate lock, component code **1322** on the following connection: • **MG** of component **1322**. If the connection is faulty and there is a repair procedure (see **Technical Note 6015A, Electrical wiring repair, Wiring: Precautions for repair**), repair the wiring, otherwise replace it.
Check **the continuity and insulation** of the following connection: • **18A** between components **165** and **1322** If the connection or connections are faulty and there is a repair procedure (see **Technical Note 6015A, Electrical wiring repair, Wiring: Precautions for repair**), repair the wiring, otherwise replace it.
Check for correct operation of the tailgate lock switch, component code **1322**. Check the **continuity** between connections **18A** and **MG** of the tailgate lock switch. If not correct, ensure the conformity of the switch.
If the fault is still present, contact the Techline.

AFTER REPAIR	Check the system operation.

ALP 9	The brake lights operate erratically

NOTES	
	Only consult this customer complaint after a full check with the **diagnostic tool**. There must be no **present** or **stored** faults.
	Special note: Use the **Wiring Diagrams Technical Note for DUSTER**.

Check the condition of the bulbs. Replace the bulbs if they are defective (see **MR 451 Mechanical, 81A, Rear lighting, Rear light bulb: Removal - Refitting**).
Check the presence and condition of fuse **F03 (10 A)** on component **1016**. Replace the fuse if the check is not correct.
Check the condition and connection of the connectors of the brake lights switch, component code **160**, the high-level brake light, component code **639**, the rear right-hand light, component code **172**, and the rear left-hand light, component code **173**. If the connectors are faulty and if there is a repair procedure (see **Technical Note 6015A, Repairing electrical wiring, Wiring: Precautions for repair),** repair the connector, otherwise replace the wiring.
Check for **+12 V after ignition feed** on the brake lights switch, component code **160** on the following connection: • **AP1** of component **160**. Check **the continuity and insulation** of the following connection: • **AP1** between components **1016** and **160**. If the connection or connections are faulty and there is a repair procedure (see **Technical Note 6015A, Electrical wiring repair, Wiring: Precautions for repair**), repair the wiring, otherwise replace it.
Check for **+12 V after ignition feed** (when the brake lights are requested by the brake pedal) on the following connection: • **65A** of component **172, 173 and 639**, Check for **earth** on the following connections: • **MF** of component **172**, • **MG** of component **173** and **639**. If the connections are faulty and if there is a repair procedure (see **Technical Note 6015A (Renault) or Technical Note 9804A (Dacia), Electrical wiring repair, Wiring: Precautions for repair**), repair the wiring, otherwise replace it.

AFTER REPAIR	Check the system operation.

ALP 9 CONTINUED	

Check **the continuity and insulation** of the following connection: • **65A** between components **160** and **639, 172, 173**, If the connections are faulty and if there is a repair procedure (see **Technical Note 6015A (Renault) or Technical Note 9804A (Dacia), Electrical wiring repair, Wiring: Precautions for repair**), repair the wiring, otherwise replace it.
Check for correct operation of the brake lights switch, component code **160**. When the brake lights are requested by the brake pedal, check the **continuity** between connections **AP1** and **65A** of the brake lights switch. If it is not correct, ensure the conformity of the switch.
If the fault is still present, contact the Techline.

AFTER REPAIR	Check the system operation.

ALP 10	The brake lights are still illuminated and the brake light switch is released

NOTES	
	Only consult this customer complaint after a full check with the **diagnostic tool**. There must be no **present** or **stored** faults.
	Special note: Use the **Wiring Diagrams Technical Note for DUSTER**.

Check the condition and connection of the connectors of the brake lights switch, component code **160**, the high-level brake light, component code **639**, the rear right-hand light, component code **172**, and the rear left-hand light, component code **173**. If the connectors are faulty and if there is a repair procedure (see **Technical Note 6015A, Repairing electrical wiring, Wiring: Precautions for repair),** repair the connector, otherwise replace the wiring.
Check the **insulation to +12 V feed** of the following connection: • **65A** of component **172, 173 and 639**. If the connection or connections are faulty and if there is a repair procedure (see **Technical Note 6015A (Renault) or Technical Note 9804A (Dacia), Electrical wiring repair, Wiring: Precautions for repair**), repair the wiring, otherwise replace it.
If the fault is still present, contact the Techline.

AFTER REPAIR	Check the system operation.

ALP 11	The reversing light operates erratically

NOTES	
	Only consult this customer complaint after a full check with the **diagnostic tool**. There must be no **present** or **stored** faults.
	Special note: Use the **Wiring Diagrams Technical Note for DUSTER**.

Check the condition of the bulb. Replace the bulb if it is defective (see **MR 451 Mechanical, 81A, Rear lighting, Rear light bulb: Removal - Refitting**).
Check the presence and condition of fuse **F27 (20 A)** on component **1016**. Replace the fuse if the check is not correct.
Check the condition and connection of the connectors of the reversing lights switch, component code **155 (BVM5)** or **1109 (BVM6)** and the rear right-hand light, component code **172** for left-hand drive or the rear left-hand light, component code **173** for right-hand drive**.** If the connector is faulty and there is a repair procedure (see **Technical Note 6015A (Renault) or Technical Note 9804A (Dacia), Electrical wiring repair, Wiring: Precautions for repair**), repair the connector, otherwise replace the wiring.
Check for **+12 V after ignition feed** on the reversing lights switch, component code **155** or **1109 (depending on equipment)** on the following connection: • **AP9** of component **155** or **1109**. Check **the continuity and insulation** of the following connection: • **AP9** between components **1016** and **155 or 1109**. If the connection or connections are faulty and there is a repair procedure (see **Technical Note 6015A, Electrical wiring repair, Wiring: Precautions for repair**), repair the wiring, otherwise replace it.

AFTER REPAIR	Check the system operation.

UCH_V09_ALP11

ALP 11 CONTINUED	

Check for **+12 V after ignition feed** (when the reversing lights are requested) on the following connection:
- **H66P** of component **172** for left-hand drive,
- **H66P** of component **173** for right-hand drive.

Check for earth on the following connections:
- **MF** of component **172** for left-hand drive,
- **MG** of component **173** for right-hand drive.

If the connection or connections are faulty and if there is a repair procedure (see **Technical Note 6015A (Renault) or Technical Note 9804A (Dacia), Electrical wiring repair, Wiring: Precautions for repair**), repair the wiring, otherwise replace it.

Check **the continuity and insulation** of the following connection:
H66P between components **155** or **1109** and **172** or **173**,
If the connections are faulty and if there is a repair procedure (see **Technical Note 6015A (Renault) or Technical Note 9804A (Dacia), Electrical wiring repair, Wiring: Precautions for repair**), repair the wiring, otherwise replace it.

Check for correct operation of the reversing lights switch, component code **155 (BVM5)** or **1109 (BVM6)**.
When the reversing lights are requested, check the **continuity** between connections **H66P** and **MG** or **MF** of the reversing lights switch. If not correct, ensure the conformity of the switch.

If the fault is still present, contact the Techline.

AFTER REPAIR	Check the system operation.

ALP 12	**The flashing light of the hazard warning lights control button does not work**

NOTES	There must be no **present** or **stored** faults. Press the hazard warning lights control. Check if status **ET485 Hazard warning lights signal** is **PRESENT** and the hazard warning lights are illuminated, If not correct, refer to the interpretation of this status.
	Special note: Use the **Wiring Diagrams Technical Note for DUSTER**.

Check the connection and condition of the connectors of the hazard warning lights control, component code **125** and the UCH, component code **645**. If the connector is faulty and there is a repair procedure (see **Technical Note 6015A (Renault) or Technical Note 9804A (Dacia), Electrical wiring repair, Wiring: Precautions for repair**), repair the connector, otherwise replace the wiring.
Check for earth on the following connection: • **MAN** of component **125**. If the connections are faulty and if there is a repair procedure (see **Technical Note 6015A (Renault) or Technical Note 9804A (Dacia), Electrical wiring repair, Wiring: Precautions for repair**), repair the wiring, otherwise replace it.

AFTER REPAIR	Check the system operation.

ALP 12 CONTINUED	

Check the **insulation, continuity** and the **absence of interference resistance** on the following connection:
- **64D** between components **125** and **645.**

If the connection is faulty and if there is a repair procedure (see **Technical Note 6015A (Renault) or Technical Note 9804A (Dacia), Electrical wiring repair, Wiring: Precautions for repair**), repair the wiring, otherwise replace it.

If the fault is still present, contact the Techline.

AFTER REPAIR	Check the system operation.

ALP 13	The backlighting of the hazard warning lights control button operates erratically

NOTES	
	Only address this customer complaint after a complete check with the diagnostic tool. There must be no **present** or **stored** faults. Check the conformity of status **ET324 Side lights request** and **ET485 Hazard warning lights signal**. If not correct, refer to the interpretation of this status.
	Special note: Use the **Wiring Diagrams Technical Note for DUSTER**.

Put the lighting stalk, component code **209** in the side lights position.
Check the condition and connection of the hazard warning lights control connector, component code **125**. If the connector is faulty and there is a repair procedure (see **Technical Note 6015A (Renault) or Technical Note 9804A (Dacia), Electrical wiring repair, Wiring: Precautions for repair**), repair the connector, otherwise replace the wiring.
Check for **+12 V** (when side lights are requested) on the following connections: • **LPG** of component **125**, Check for **earth** on the following connection: • **MAN** of component **125**, If the connections are faulty and if there is a repair procedure (see **Technical Note 6015A (Renault) or Technical Note 9804A (Dacia), Electrical wiring repair, Wiring: Precautions for repair**), repair the wiring, otherwise replace it.

AFTER REPAIR	Check the system operation.

ALP 13 CONTINUED	

Check **the continuity** of the following connection:
- **LPD** between components **125** and **1016** (for a left-hand drive vehicle),
- **LPG** between components **125** and **1016** (for a right-hand drive vehicle),

If the connections are faulty and if there is a repair procedure (see **Technical Note 6015A (Renault) or Technical Note 9804A (Dacia), Electrical wiring repair, Wiring: Precautions for repair**), repair the wiring, otherwise replace it.

If the fault is still present, contact the Techline.

AFTER REPAIR	Check the system operation.

ALP 14	The front fog lights are always illuminated

NOTES	
	Only address this customer complaint after a complete check with the diagnostic tool. There must be no **present** or **stored** faults.
	Special note: Use the **Wiring Diagrams Technical Note for DUSTER**.

Check the condition of the front fog lights relay, component code **231**. Replace the relay if necessary.
Check the condition and connection of the connectors of the front fog lights relay, component code **231** and the lighting stalk, component code **209**. If the connector is faulty and there is a repair procedure (see **Technical Note 6015A (Renault) or Technical Note 9804A (Dacia), Electrical wiring repair, Wiring: Precautions for repair**), repair the connector, otherwise replace the wiring.
Check the **insulation to +12 V** of the following connections: • **8A** between components **209** and **231**, • **8B** between components **231** and **176** for the front right-hand fog light; **177** for the front left-hand fog light. If the connection or connections are faulty and if there is a repair procedure (see **Technical Note 6015A (Renault) or Technical Note 9804A (Dacia), Electrical wiring repair, Wiring: Precautions for repair**), repair the wiring, otherwise replace it.
If the fault is still present, contact the Techline.

AFTER REPAIR	Check the system operation.

ALP 15	The timed courtesy light does not work

NOTES	
	Only address this customer complaint after a complete check with the diagnostic tool. There must be no **present** or **stored** faults.
	Special note: Use the **Wiring Diagrams Technical Note for DUSTER**.

Check by reading configuration **LC047 timed courtesy light** that the configuration corresponds to the vehicle equipment. Carry out the configuration using command **SC008 UCH type** if necessary.
Put the courtesy light in the **AUTO** position and run command **AC145**. If the courtesy light does not illuminate, refer to the interpretation of this command.
If the fault is still present, contact the Techline.

AFTER REPAIR	Check the system operation.

DUSTER

8 Electrical equipment

82D ACCESS – SAFETY

UCH
Vdiag No.: 09

Fault finding – Introduction	82D - 2
Fault finding – List and location of components	82D - 8
Fault finding – Role of components	82D - 9
Fault finding – Function	82D - 10
Fault finding – Configuration	82D - 13
Fault finding – Programming	82D - 15
Fault finding – Fault summary table	82D - 18
Fault finding – Interpretation of faults	82D - 19
Fault finding – Conformity check	82D - 23
Fault finding – Status summary table	82D - 26
Fault finding – Interpretation of statuses	82D - 27
Fault finding – Parameter summary table	82D - 30
Fault finding – Interpretation of parameters	82D - 31
Fault finding – Command summary table	82D - 32
Fault finding – Interpretation of commands	82D - 33
Fault finding – Customer complaints	82D - 38
Fault finding – Fault location chart	82D - 39

V1 **Edition Anglaise**

"The repair procedures given by the manufacturer in this document are based on the technical specifications current when it was prepared.

The procedures may be modified as a result of changes introduced by the manufacturer in the production of the various component units and accessories from which his vehicles are constructed."

All rights reserved by Renault s.a.s.

Copying or translating, in part or in full, of this document or use of the service part reference numbering system is forbidden without the prior written authority of Renault s.a.s.

© Renault s.a.s. 2009

1. APPLICABILITY OF THE DOCUMENT

This document presents the fault finding method applicable to all computers with the following specifications:

Vehicle: **DUSTER**	*Computer name:* **UCH**
Function concerned: **ACCESS/SAFETY**	*Vdiag No.:* **09**

2. PREREQUISITES FOR FAULT FINDING

Documentation type

Fault finding procedures (this manual):
– Assisted fault finding (integrated into the **diagnostic tool**),
– Dialogys.

Wiring Diagrams:
– Visu-Schéma.

Type of diagnostic tools

– CLIP

Special tooling required

Special tooling required	
Diagnostic tool	
	Multimeter
Elé. 1622	Bornier
Elé. 1681	Universal bornier

If the information obtained by the diagnostic tool requires checking electrical continuity, connect bornier Elé. 1622 or universal bornier Elé. 1681.

WARNING:
– All tests with bornier **Elé. 1622** or **Elé. 1681** must be conducted with the battery disconnected.
– The bornier is only designed to be used with a multimeter. Never supply the test points with **12 V**.

3. SAFETY INSTRUCTIONS

The safety instructions must be followed at all times when working on components, to avoid damage or injury:
– check the battery voltage to avoid incorrect operation of computer functions,
– use the proper tools.

Procedure for disconnecting the battery:
– switch off the ignition,
– switch off all electrical consumers,
– Wait at least **1 minute** for the electronic systems to switch off,
– disconnect the battery, starting with the negative terminal.

Faults

Faults are declared present or stored (depending on whether they appeared in a certain context and have disappeared since, or whether they remain present but are not diagnosed within the current context).

The **present** or **stored** status of faults should be taken into consideration when the **diagnostic tool** is used after the + after ignition feed (without activating the system components).

For a **present fault**, apply the procedure described in the Interpretation of faults section.
For a **stored fault**, note the faults displayed and apply the Notes section.

If the fault is **confirmed** when the instructions are applied, the fault is present. Deal with the fault.
If the fault is **not confirmed**, check:
– the electrical connections that correspond to the fault,
– the connectors for this connection,
– the resistance of the faulty component,
– the condition of the wires.
Refer to paragraphs 4.1 Checking wiring and 4.2 Checking connectors

Conformity check

The aim of the conformity check is to check data which does not produce a fault on **the diagnostic tool** when the data is inconsistent. Therefore, this stage is used to:
– carry out fault finding on faults that do not have a fault display, and which may correspond to a customer complaint,
– check that the system is operating correctly and that there is no risk of a fault recurring after repair.

This section gives the fault finding procedures for statuses and parameters and the conditions for checking them.

If a status is not behaving normally or a parameter is outside permitted tolerance values, you should consult the corresponding fault finding page.

Customer complaints - Fault finding chart

If the test with **the diagnostic tool** is OK but the customer complaint is still present, the fault should be dealt with by **customer complaints**.

A summary of the overall procedure to follow is provided on the following page in the form of a flow chart.

4. FAULT FINDING PROCEDURE

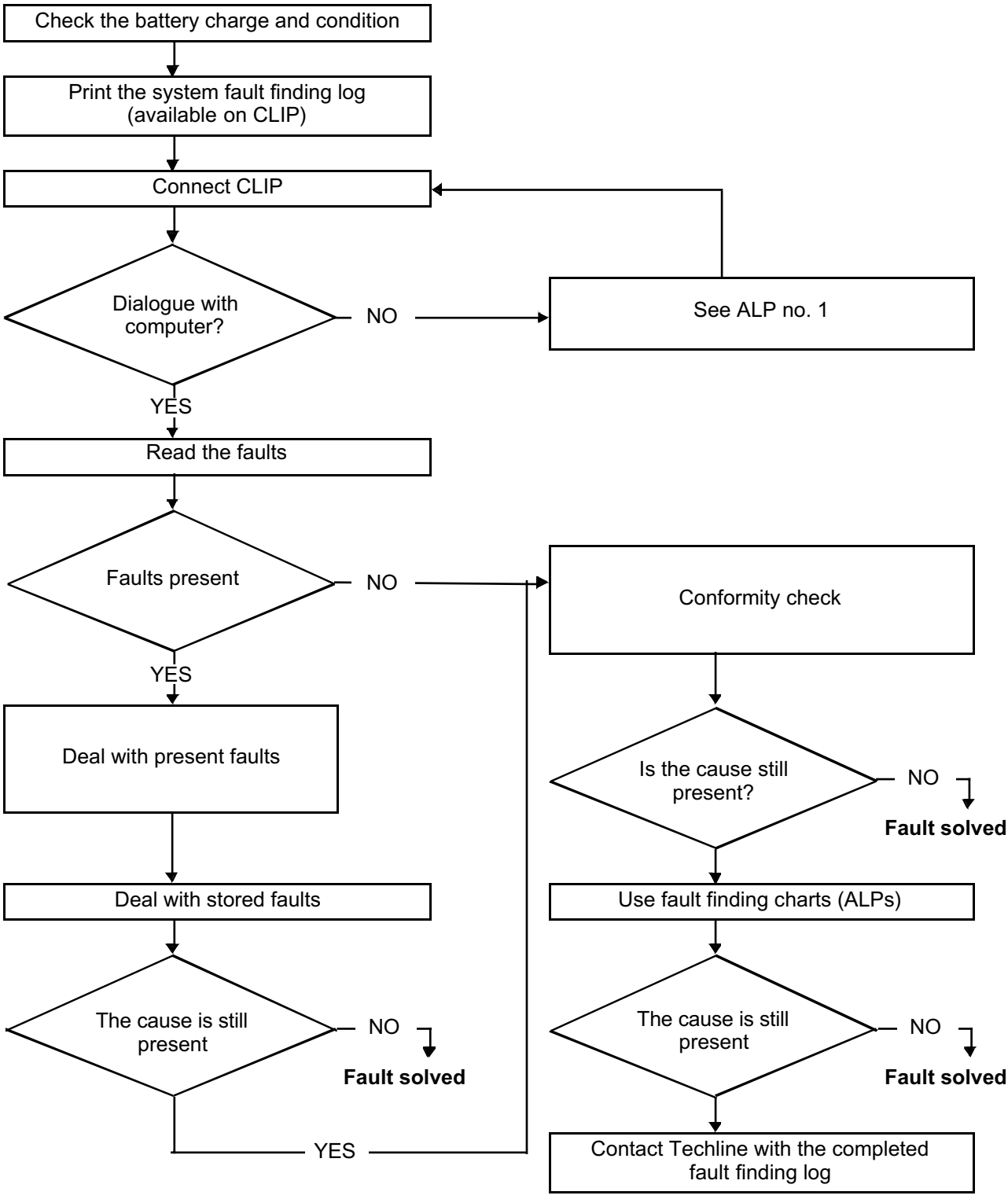

FAULT FINDING PROCEDURE (CONTINUED)

4.1 Wiring check

Fault finding problems
Disconnecting the connectors and/or manipulating the wiring may temporarily clear the cause of a fault.

Visual inspection
Look for damage under the bonnet and in the passenger compartment.
Carefully check the protectors, insulation, and routing of the wiring, as well as the mountings.

Physical inspection
When manipulating the wiring, either use the **diagnostic tool** to detect a change in status, from "stored" to "present", or the multimeter to view the status changes.
Make sure that the connectors are firmly secured.
Apply light pressure to the connectors.
Twist the wiring harness.

Checking earth insulation
This check is carried out by measuring the voltage (multimeter in voltmeter mode) between the suspect connection and the **12 V** or **5 V**. The correct measured value is **0 V.**

Checking insulation against + 12 V or + 5 V
This check is carried out by measuring the voltage (multimeter in voltmeter mode) between the suspect connection and the earth. In the first instance, the earth may be taken on the chassis. The correct measured value should be **0 V**

Continuity check
A continuity check is carried out by measuring the resistance (multimeter in ohmmeter mode), with the connectors disconnected at both ends. The expected result is **1 Ω ± 1 Ω** for each connection. The line must be fully checked, and the intermediate connections are only included in the method if this saves time during the fault finding procedure. The continuity check on the multiplex lines must be carried out on both wires. The measured value should be **1 Ω ± 1 Ω**.

Checking the supply
This check may be carried out using a test light (**21 W** or **5 W** depending on the maximum authorised load).

4.2 Connector check

Note:
Carry out each requested check visually.
Do not remove a connector if it is not required.

Note:
Repeated connections and disconnections alter the functionality of the connectors and increase the risk of poor electrical contact. Limit the number of connections/disconnections as much as possible.

Note:
The check is carried out on the 2 parts of the connection. There may be two types of connection:
– Connector/Connector.
– Connector/Device.

Visual inspection of the connection:
– Check that the connector is connected correctly and that the male and female parts of the connection are correctly coupled.

Visual inspection of the area around the connection:
– Check the condition of the mounting (pin, strap, adhesive tape, etc.) if the connectors are attached to the vehicle.
– Check that there is no damage to the wiring trim (sheath, foam, adhesive tape, etc.) near the wiring.
– Check that there is no damage to the electrical wires at the connector outputs, in particular on the insulating material (wear, cuts, burns, etc.).

Disconnect the connector to continue the checks.

Visual inspection of the plastic casing:
– Check that there is no mechanical damage (casing crushed, cracked, broken, etc.), in particular to the fragile components (lever, lock, openings, etc.).
– Check that there is no heat damage (casing melted, darker, deformed, etc.).
– Check that there are no stains (grease, mud, liquid, etc.).

• **Visual inspection of the metal contacts:**
(The female contact is called CLIP. The male contact is called TAB).
– Check that there are no bent contacts (the contact is not inserted correctly and can come out of the back of the connector). The contact comes out of the connector when the wire is pulled gently.
– Check that there is no damage (folded tabs, clips open too wide, blackened or melted contact, etc.).
– Check that there is no oxidation on the metal contacts.

- **Visual inspection of the sealing:**

(Only for watertight connectors)
Check for the seal on the connection (between the 2 parts of the connection).
– Check the seal at the back of the connectors:
  –For unit *joints* (1 for each wire), check that the unit joints are present on each electrical wire and that they are correctly positioned in the opening (level with the housing). Check that plugs are present on openings which are not used.
  –For a *grommet* seal (one seal which covers the entire internal surface of the connector), check that the seal is present.
  –For *gel* seals, check for gel in all of the openings without removing the excess or any protruding sections (it does not matter if there is gel on the contacts).
  –For *hotmelt* sealing (heat-shrink sheath with glue), check that the sheath has contracted correctly on the rear of the connectors and electrical wires, and that the hardened glue comes out of the side of the wire.
– Check that there is no damage to any of the seals (cuts, burns, significant deformation, etc.).

If a fault is detected, consult **Technical Note 6015A, Repairing electrical wiring.**

FAULT FINDING LOG

IMPORTANT!

IMPORTANT
Any fault on a complex system requires thorough fault finding with the appropriate tools.
The FAULT FINDING LOG, which should be completed during the fault finding procedure, ensures a record is kept of the procedure carried out. It is an essential document when consulting the manufacturer.

IT IS THEREFORE ESSENTIAL THAT THE FAULT FINDING LOG IS FILLED OUT EVERY TIME IT IS REQUESTED BY TECHLINE OR THE WARRANTY RETURNS DEPARTMENT.

You will always be asked for this log:
– when requesting technical assistance from the Techline,
– when requesting approval before replacing parts for which approval is compulsory,
– to be attached to monitored parts for which reimbursement is requested. The log is needed for warranty reimbursement, and enables better analysis of the parts removed.

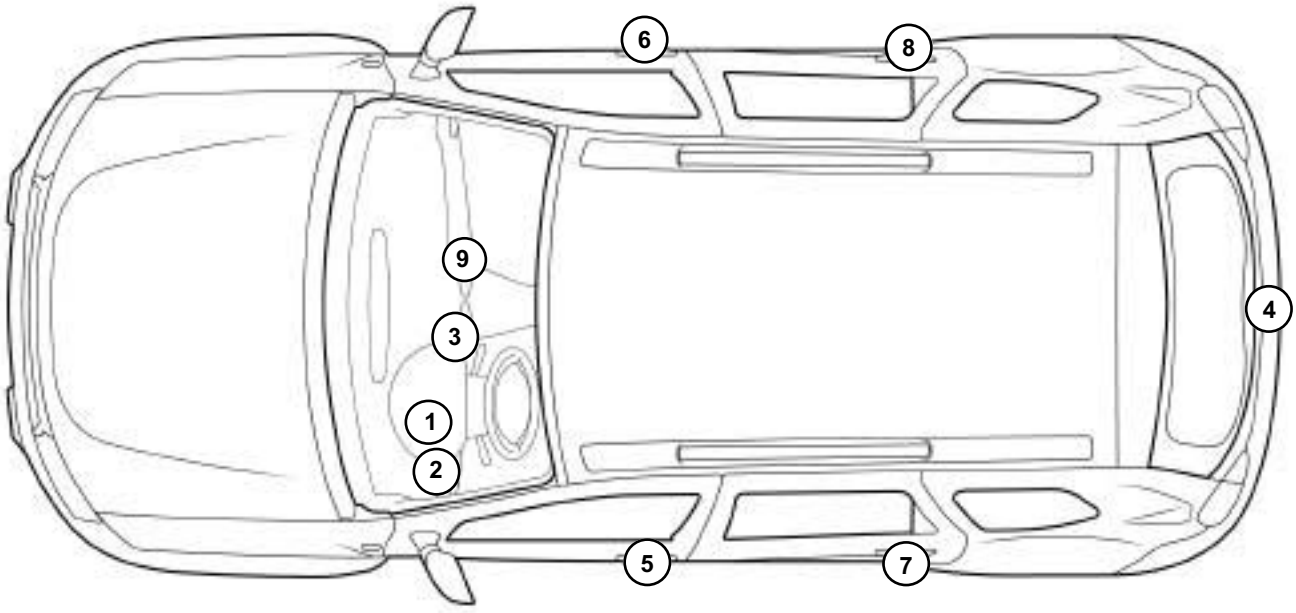

0000000738

1	UCH	6	Passenger lock
2	Passenger compartment fuse box	7	Rear left-hand lock
3	Transponder ring	8	Rear right-hand lock
4	Tailgate or boot lid lock	9	CPE* button
5	Driver's lock	CPE*: electric central door locking	

Electric central door locking:
The doors can be centrally locked and unlocked using the CPE* button.

Tailgate lock:
The tailgate locking and unlocking function is controlled by the UCH.

Front driver and passenger locks:
The front driver and passenger door locking and unlocking command is provided by the UCH.

Transponder and radiofrequency key:
– the **transponder** in the key enables the following signals to be sent to the UCH:
– Key identifier signal.
– Immobiliser code signal.
The transponder is also involved in the Immobiliser function.

The radiofrequency key is used to transmit the key identifier information after pressing the button once. A radiofrequency wave is sent to the UCH to carry out the user's request if the key is allocated to the vehicle (locking or unlocking the doors and the tailgate).

Injection
When the authentication messages with the UCH have been exchanged, the injection can be unlocked and authorise the starting of the engine.
The injection system is unlocked and engine starting is authorised as soon as the UCH has authenticated the injection computer.

CPE*: electric central door locking.

Engine immobiliser

The immobiliser function is divided between three coded computers (the UCH, the injection computer and the key). Communication between the key and the UCH is ensured by the transponder ring through a magnetic field created between the transponder ring and the key.

When the + After ignition is switched on, the key sends its identifier to the UCH via the transponder ring, located on the ignition switch. The UCH runs through an authentication procedure with the key via the transponder ring. If the key is allocated to the vehicle, then operation of the starter motor is authorised and the injection system is unlocked.

The injection computer has no reference code in its memory: the code which is transmitted is stored.

If the code supplied by the key is not recognised by the UCH, then the system remains locked. The red engine immobiliser warning light flashes (quickly). The vehicle cannot be started.

IMPORTANT
When the vehicle battery has a low charge, the drop in voltage caused by operating the starter could reactivate the immobiliser. If the voltage is too low, the engine cannot be started, even by pushing the vehicle.

Recognition of keys in normal operation

	IMMOBILISER WARNING LIGHT
Vehicle protected (without After Ignition)	Indicator light flashes at **1 Hz**
Key recognised, injection protection lifted	Warning light continuously illuminated for **3 seconds** and then goes out
Key not recognised, injection protected	Warning light flashes at **4 Hz**

Locking / Unlocking

This system can function with up to four remote control units (the UCH can only manage four different codes).

The radio frequency signal receiver is integrated in the UCH.

The central door locking button is inhibited once the doors have been locked by the remote control.

Locking and unlocking the doors with the remote control is confirmed by the hazard warning lights flashing (if all the doors are closed properly):
– locking: 2 flashes,
– unlocking: 1 flash.

Depending on the equipment level, the system automatically locks the vehicle opening elements (without the hazard warning lights flashing) if the doors are not opened for **30 seconds** after they have been unlocked.
The UCH controls the vehicle interior lighting. If a courtesy light is left on, the UCH will cut the lighting supply after a period of approximately **30 minutes**.

Note:
Unlocking can be performed by the UCH, if the airbag computer has detected an impact or if it is faulty (see **88C, Airbag - Seat belt pretensioners**).

The "top of the range" version gradually dims the interior lights after one of the vehicle doors has been opened. After the doors have been closed using the radiofrequency remote control, the interior lights are switched off immediately.

Replacement keys are assigned to the vehicle VIN when they are ordered from the spare parts department.
It is possible in the event of a key being stolen or lost or at the customer's request, for a vehicle key to be de-allocated.
It can be reassigned to the same vehicle if necessary.

Starting

The UCH controls the command and supply part of the start-up function and the starting and charging process is controlled by the UCH. For this function to operate normally, the protection function must have been successfully completed.

IMPORTANT:
When the vehicle battery has a low charge, the drop in voltage caused by operating the starter could reactivate the immobiliser. If the voltage is too low, the engine cannot be started, even by pushing the vehicle.

Note:
If several, i.e. three or four, attempts have been made using a key not allocated to the vehicle, the injection computer locks. Insert a key allocated to the vehicle for **20 seconds** in **+ after ignition feed**, then switch off the ignition and wait for the end of power-latch (**20 minutes**) to allow the injection computer to unlock.

* Powerlatch: Injection computer power supply duration after + 12V after ignition cut-off to the ignition switch.

CONFIGURATION

New parts are not coded. Once fitted on the vehicle, they must be programmed with a code to become operational.

To perform this procedure, it is essential that some parts on the vehicle are already correctly coded (with the vehicle code).

Refer to the allocation table.

ALLOCATION TABLE

AFTER-SALES OPERATION	STATE OF COMPONENTS			REPAIR CODE NEEDED
	UCH	Key	Injection computer	
Programming thePassenger Compartment Central Unit (UCH)	Blank	Coded	Coded	YES
Key allocation or cancellation	Coded	Blank*	-	YES
Programming the injection computer	Coded	Coded	Blank	NO

Blank*: The key allocated to a vehicle must be blank or already programmed to this vehicle.

A new UCH is not coded. You must therefore program a code into a new UCH fitted to a vehicle to make the UCH operational.

To perform this procedure, at least one of the vehicle's old keys and the repair code are required and the injection computer must be correctly coded (refer to the allocation table).

IMPORTANT:
If a code is programmed into the UCH, the UCH is allocated to the vehicle. It is impossible to erase the code or program in another one. The programmed code cannot be erased.

WARNING:
The keys submitted during this procedure will only work if:
they have already been coded on this vehicle,
or they are new (not coded).

Note:
If only the UCH is replaced, there is no operation to perform on the injection computer, as it retains the same immobiliser code.

Equipment required:
CLIP diagnostic tool

Access and Safety function configurations in the UCH

Configuration readings available using the **diagnostic tool**:

Configuration reading	Name of configuration	Option	Configuration
LC012	Automatic relocking	**WITH** OR **WITHOUT**	**SC008 UCH type**
LC097	Type of key	**ONE BUTTON** or **TWO BUTTONS**	
LC113	Airbag	**WITH** OR **WITHOUT**	
LC149	Key locking	**WITH** OR **WITHOUT**	
LC165	Seat belt not fastened sensor	**ACTIVE** or **INACTIVE**	
LC169	Vehicle locked by RAID* function	**YES** or **NO**	
LC170	RAID* function authorisation by diag tool	**WITH** OR **WITHOUT**	
LC171	Radiofrequency function	**WITH** OR **WITHOUT**	
LC172	Type of central door locking button (CPE)*	**1 POSITION** or **2 POSITIONS**	

* RAID: Renault Anti-Intruder Device.
* CPE: Electric central door locking.

- Check the configurations in the **Read configurations** menu

UCH PROGRAMMING PROCEDURE

The UCH programming procedure is carried out using the **diagnostic tool**.

– Establish dialogue with the UCH computer.
– In the menu **Special commands**, select the command **SC004 Program UCH**.

The tool displays **Remove the key from the anti-theft switch**,

The tool displays **Please enter the After-Sales code**. With the ignition off, enter the secret After-Sales code and validate.

If the code format is correct, the tool displays **Insert a key which has already been programmed to the vehicle** and the programming procedure starts.

The tool displays **UCH programming completed, please start key programming procedure**, the UCH is coded.

Enter key programming mode to allocate the other keys (maximum of three keys). Several seconds may elapse before this message appears.

IMPORTANT:
The maximum delay between each operation is **5 minutes**, otherwise the procedure is cancelled.
Once the UCH is coded, it is impossible to clear or program it with a new code.

SPECIAL CASES

If the screen displays:

– **The After-Sales code entered does not correspond with the key inserted. Check that you have entered the code correctly and you have inserted a key belonging to the vehicle:**
– The code read is incorrect or the UCH has already been coded on another vehicle.

– **The UCH is not blank. Please start the key programming procedure:** the UCH is already coded on this vehicle.

– **Check the After-Sales code**: the code entered is incorrect. Check, then try entering the data again,

– **UCH programming failure, key cannot be used on this vehicle:** the key code does not correspond to the code entered (the key belongs to a vehicle from a different range).

– **The key inserted is blank. Please present another key which has already been programmed to this vehicle**: the key is blank, present a key which has already been coded on this vehicle.

KEY ALLOCATION PROCEDURE

WARNING:
If none of the keys are available, it will be necessary to carry out a reallocation procedure for all keys.

Establish dialogue with the UCH computer.

In the menu **Special commands**, validate the command **SC015 Key allocation**.

Key programming is split into 2 parts:

1. Key insertion stage.
2. Key allocation.

IMPORTANT:
Keys which are not presented will no longer be active and will not be able to be used in the key allocation stage. Restart the procedure to reallocate them.

Switch off the ignition and click on Next.

Ensure that you have all the vehicle's keys. Keys not inserted during this procedure will not work.

IMPORTANT:
Only 2 blank keys are authorised via the key allocation procedure.

Switch on the ignition and insert the key to be allocated.

Switch off the ignition.

The tool asks "**Register another key?**".

To allocate additional keys, switch on the ignition for several seconds with the other vehicle keys to be allocated (three maximum) and then validate.

After each additional key allocation, switch off the ignition.

The tool displays "**Vehicle VIN**".

Enter the vehicle VIN.

Enter the programming key below into Code Management with the vehicle VIN.

IMPORTANT:
You now have **60 minutes** to enter the code provided.
DO NOT DISCONNECT THE DIAGNOSTIC TOOL

Enter the immobiliser code found in Code Management.

The tool displays **Command in progress**.

Insert the key to be allocated. It is important not to leave the previously allocated key in the ignition switch. Switch on the ignition and then validate.

The tool displays **Allocation in progress. Do not remove the key**.

Switch off the ignition after allocation has finished.

Insert the next key to be allocated.

It is important not to leave the previously allocated key in the ignition switch. Switch on the ignition and then validate.

The tool displays **Allocation in progress. Do not remove the key**.

Switch off the ignition after allocation has finished.

The tool displays **End of programming procedure**.

Tool fault	Diagnostic tool title
DF180	Decoder -> ring connection
DF272	Coded line circuit
DF274	Electric central locking button

DF180 PRESENT OR STORED	DECODER -> RING CONNECTION CC.0: Short circuit to earth CC.1: Short circuit to + 12 V

NOTES	**Special note:** Use the **Wiring Diagrams Technical Note for DUSTER**.

CC.0	Check the connection and condition of the transponder ring connector, component code **957**. If the connector is faulty and if there is a repair procedure (see **Technical Note 6015A (Renault) or Technical Note 9804A (Dacia), Electrical wiring repair, Wiring: Precautions for repair**), repair the connector, otherwise replace the wiring.
	Check the connection and condition of the UCH connector, component code **645**. If the connector is faulty and if there is a repair procedure (see **Technical Note 6015A (Renault) or Technical Note 9804A (Dacia), Electrical wiring repair, Wiring: Precautions for repair**), repair the connector, otherwise replace the wiring.
	Check the **continuity and insulation against earth** of the following connections: – **80X** between components **645** and **957**. If the connection or connections are faulty and if there is a repair procedure (see **Technical Note 6015A (Renault) or Technical Note 9804A (Dacia), Electrical wiring repair, Wiring: Precautions for repair**), repair the wiring, otherwise replace it.
	If the fault is still present, contact the Techline.

AFTER REPAIR	Follow the instructions. Deal with any other faults. Clear the **stored** faults.

UCH_V09_DF180

DF180 CONTINUED	

CC.1	Check the connection and condition of the transponder ring connector, component code **957**. If the connector is faulty and if there is a repair procedure (see **Technical Note 6015A (Renault) or Technical Note 9804A (Dacia), Electrical wiring repair, Wiring: Precautions for repair**), repair the connector, otherwise replace the wiring.
	Check the connection and condition of the UCH connector, component code **645**. If the connector is faulty and if there is a repair procedure (see **Technical Note 6015A (Renault) or Technical Note 9804A (Dacia), Electrical wiring repair, Wiring: Precautions for repair**), repair the connector, otherwise replace the wiring.
	Check the **continuity** and **insulation to + 12 V** on the following connections: • **80X** between components **645** and **957**. If the connection or connections are faulty and if there is a repair procedure (see **Technical Note 6015A (Renault) or Technical Note 9804A (Dacia), Electrical wiring repair, Wiring: Precautions for repair**), repair the wiring, otherwise replace it.
	If the fault is still present, contact the Techline.

AFTER REPAIR	Follow the instructions. Deal with any other faults. Clear the **stored** faults.

DF272 PRESENT OR STORED	CODED LINE CIRCUIT CC.0: Short circuit to earth CC.1: Short circuit to + 12 V

NOTES	**Special note:** Use the **Wiring Diagrams Technical Note for DUSTER**.

Check the connection and condition of the injection computer connector, component code **120**. If the connector is faulty and if there is a repair procedure (see **Technical Note 6015A (Renault) or Technical Note 9804A (Dacia), Electrical wiring repair, Wiring: Precautions for repair**), repair the connector, otherwise replace the wiring.
Check the connection and condition of the UCH connector, component code **645**. If the connector is faulty and if there is a repair procedure (see **Technical Note 6015A (Renault) or Technical Note 9804A (Dacia), Electrical wiring repair, Wiring: Precautions for repair**), repair the connector, otherwise replace the wiring.
Check the **continuity** and **insulation** of the following connection: • **H17** between components **645** and **120**. If the connection is faulty and if there is a repair procedure (see **Technical Note 6015A (Renault) or Technical Note 9804A (Dacia), Electrical wiring repair, Wiring: Precautions for repair**), repair the wiring, otherwise replace it.
If the fault is still present, contact the Techline.

AFTER REPAIR	Deal with any other faults. Clear the **stored** faults.

UCH_V09_DF272

DF274 **STORED**	ELECTRIC DOOR LOCKING BUTTON 1.DEF: (-) button jammed 2.DEF: (+) button jammed

NOTES	The fault is declared **stored** after activation of the door locking button.
	Special note: Use the **Wiring Diagrams Technical Note for DUSTER**.

Check the connection and condition of the UCH connector, component code **645** and check the central door locking control connector, component code **123** or the driver's door electric lock connector, component code **140**.
If the connectors are faulty and if there is a repair procedure (see **Technical Note 6015A (Renault) or Technical Note 9804A (Dacia), Electrical wiring repair, Wiring: Precautions for repair**), repair the connector, otherwise replace the wiring.

Check the **insulation** and **continuity** of the following connections:
- **20B** between components **645** and **123 or 140 without TRF**,
- **20A** between components **645** and **123 or 140 without TRF**,
- **MAN** of component **123**.
- **MAM** of component **140**.

If the connection or connections are faulty and if there is a repair procedure (see **Technical Note 6015A (Renault) or Technical Note 9804A (Dacia), Electrical wiring repair, Wiring: Precautions for repair**), repair the wiring, otherwise replace it.

If the fault is still present, contact the Techline.

AFTER REPAIR	Follow the instructions. Deal with any other faults. Clear the **stored** faults.

UCH_V09_DF274M

NOTES	Only check conformity after a complete check with **the diagnostic tool.** The values shown in this conformity check are given as a guide. Application condition: **engine off, ignition on**.

SUB-FUNCTION: STARTING

Function	Parameter or Status Checked or Action		Display and notes	Fault finding
Supply	**ET004:**	**+ 12 V** after ignition feed	**YES**	**In the event of a fault,** consult the interpretation of status **ET004 (see 87B, Passenger compartment connection unit)**.
Engine immobiliser	**ET184:**	Valid key code	**YES** when the ignition is switched on	**In the event of a fault**, apply the interpretation of status **ET184**.
	ET185:	Key code received	**YES when the ignition is switched on**	**In the event of a fault, apply the interpretation of status ET185.**
	ET549:	Immobiliser active	**NO**	**In the event of a fault**, apply the interpretation of status **ET549**.
	ET127:	Immobiliser warning light	**OFF**	**In the event of a fault,** apply the interpretation of status **ET127 (see 87B, Passenger compartment connection unit)**.
Key	**PR056:**	Number of keys allocated	**2 keys** on leaving the factory and programming of up to **4 keys** in After-Sales	**In the event of a fault**, apply the interpretation of parameter **PR056**.
Engine immobiliser	**AC003:**	Immobiliser warning light	This command is used to illuminate the immobiliser warning light	**In the event of a fault**, apply the procedure for command **AC003 (see 87B, Passenger compartment connection unit)**.

NOTES	Only perform this conformity check after a complete check with the **diagnostic tool**. The values shown in this conformity check are given as a guide. Test conditions: **Engine stopped, ignition on**.

SUB-FUNCTION: ACCESS

Function	Parameter or Status Checked or Action		Display and notes	Fault finding
Supply	**ET004:**	**+ 12 V** after ignition feed	**YES**	**In the event of a fault,** consult the interpretation of status **ET004 (see 87B, Passenger compartment connection unit)**.
Speed	**PR008:**	Vehicle speed	**X** in **mph (km/h)**	**In the event of a fault,** run a test on the computer which gives the vehicle speed signal (see **83A Instrument panel**)
Opening elements	**ET489:**	Front doors	**OPEN** when opening a front door. **CLOSED** if the doors are closed.	**In the event of a fault,** apply the interpretation of status **ET489** (see **87B, Passenger compartment connection unit**).
	ET551:	Rear doors or luggage compartment	**OPEN** when opening a rear door or the luggage compartment lid. **CLOSED** if the doors are closed.	**In the event of a fault,** apply the interpretation of status **ET551** (see **87B, Passenger compartment connection unit**).
Unlocking command	**AC005:**	Opening element unlocking	This command is used to test whether the 4 doors and the tailgate unlocking function is operating correctly	In the event of a fault, refer to the procedure for command **AC005** (see **87B, Passenger compartment connection unit**).
Central door locking	**AC136:**	Central door locking buzzer	This command is used to test the UCH buzzer	If the fault is still present, contact Techline.
Locking command	**AC004:**	Central door locking	This command is used to test whether central door locking is working	In the event of a fault, refer to the procedure for command **AC004** (see **87B, Passenger compartment connection unit**).

STATUS TEST

It is possible to determine the fault on a vehicle by means of the various pieces of information provided by checking the statuses.

ET004: **+ 12 V** after ignition
ET185: Key code received
ET184: Key code valid
ET549: Immobiliser active

If	**ET004** status **YES** **ET185** status **YES** **ET184** status **YES** **ET549** status **NO**	Check the injection system using the diagnostic tool and make sure that the injection computer is not locked. Check the dialogue between the UCH and the injection computer
If	**ET004** status **YES** **ET185** status **YES** **ET184** status **NO** **ET549** status **YES**	The coded key does not belong to the vehicle. If the key does belong to the vehicle, reallocate the keys. If the key still does not work, replace the key.
If	**ET004** status **YES** **ET185** status **NO** **ET184** status **NO** **ET549** status **YES**	The key is out of order or does not correspond with the type of vehicle.

Tool status	Diagnostic tool title
ET184	Valid key code
ET185	Key code received
ET549	Immobiliser active

AFTER REPAIR	Carry out another fault finding check on the system. Deal with any other faults. Clear the **stored** faults.

ET184	KEY CODE VALID

NOTES	The status is **YES** when the ignition is switched on (+ after ignition feed) using a key for the vehicle. If the state remains **NO**, try another key assigned to the vehicle before performing any operation.

ET184: NO despite the ignition being switched on, a key that belongs to the vehicle and the key code received (ET185 YES).

Check that status **ET004 + 12 V After ignition feed** is **YES** with the ignition on.
Re-allocate the keys with the After-Sales code using the scenario **SC015 Key allocation**. If the fault persists, replace the faulty vehicle key.

AFTER REPAIR	Carry out another fault finding check on the system. Deal with any other faults. Clear the **stored** faults.

UCH_V09_ET184

ET185	KEY CODE RECEIVED

NOTES	Check that no fault is **present** or **stored**. The status is **YES** when the ignition is switched on (+ after ignition feed) with a valid key. If the state remains **NO**, try another key assigned to the vehicle before performing any operation.
	Special note: Use the **Wiring Diagrams Technical Note for DUSTER**.

ET185: NO with ignition on and a key that belongs to the vehicle.

Check that status **ET004 + 12 V After ignition feed** is **YES** with the ignition on.
Remove any metal objects from the key-ring and try again.
Switch on the ignition with the key from another vehicle, changing the key inserts: If status **KEY CODE RECEIVED** changes to **YES**, replace the vehicle key. If status **KEY CODE RECEIVED** remains **NO**: Check the **condition** and **connection** of the connectors of the transponder ring, component code **957** and of the UCH, component code **645**. If the connector is faulty and if there is a repair procedure (see **Technical Note 6015A (Renault) or Technical Note 9804A (Dacia), Electrical wiring repair, Wiring: Precautions for repair**), repair the connector, otherwise replace the wiring. Check **the continuity, insulation and the absence of interference resistance** of the following connections: • **AP10** between components **957** and **645**, • **NC** between components **957** and **645**. If the connection or connections are faulty and if there is a repair procedure (see **Technical Note 6015A (Renault) or Technical Note 9804A (Dacia), Electrical wiring repair, Wiring: Precautions for repair**), repair the wiring, otherwise replace it.
If the problem persists, replace the transponder ring.

AFTER REPAIR	Carry out another fault finding check on the system. Deal with any other faults. Clear the **stored** faults.

UCH_V09_ET185

ET549	ENGINE IMMOBILISER ACTIVE

NOTES	The immobiliser active status should change to **inactive** when the + after ignition is switched on. The immobiliser status should be **active** when the key is absent from the ignition switch.

ET549: **YES** despite the presence of a key in the ignition switch and + after ignition feed

Check that there is no fault before dealing with this status.
Check that status **ET004 + 12 V After ignition feed** is **YES** with the ignition on. Deal with status **ET004** if it is **NO** with the ignition on.
Check status **ET185 Key code received** and status **ET184 Key code valid** with the ignition on. If statuses **ET185** and **ET184** are **YES**, perform fault finding on the injection computer. If status **ET185** is **NO**, deal with this status first. If status **ET185** is **YES** and status **ET184** is **NO**, deal with status **ET184** first.
If the fault is still present, contact the Techline.

AFTER REPAIR	Carry out another fault finding check on the system. Deal with any other faults. Clear the **stored** faults.

UCH_V09_ET549

Tool Parameter	Diagnostic tool title
PR056	Number of keys allocated

PR056	NUMBER OF KEYS ALLOCATED

NOTES	Check that no fault is **present**.

This parameter indicates the number of keys allocated to the vehicle. The maximum number of allocated keys is 4.
In the event of a fault, perform fault finding on the UCH (see **87B, Passenger compartment connection unit**).

AFTER REPAIR	Carry out another fault finding check on the system. Deal with any other faults. Clear the **stored** faults.

UCH_V09_PR056

Tool command	Diagnostic tool title
AC004	Central door locking
AC005	Central door unlocking
SC003	Spare
SC015	Key allocation

AC004	OPENING ELEMENT LOCKING

NOTES	There must be no **present** or **stored** faults. This command is for testing locking relay operation. This command lasts for **2 seconds**.
	Special note: Use the **Wiring Diagrams Technical Note for DUSTER**.

Check the condition and the connection of the UCH connector, component code **645** (see **MR 451, Mechanical, 87B, Passenger compartment connection unit**). If the connector is faulty and if there is a repair procedure (see **Technical Note 6015A (Renault) or Technical Note 9804A (Dacia), Electrical wiring repair, Wiring: Precautions for repair**), repair the connector, otherwise replace the wiring.
Check the condition and connection of the connectors of the following faulty lock(s): the rear right-hand door electric lock, component code **138**, the rear left-hand door electric lock, component code **139,** the driver's door electric lock, component code **140**, the passenger door electric lock, component code **141**, the boot lid electric lock, component code **142**. If the connectors are faulty and if there is a repair procedure (see **Technical Note 6015A (Renault) or Technical Note 9804A (Dacia), Electrical wiring repair, Wiring: Precautions for repair**), repair the connector, otherwise replace the wiring.
Check the **insulation, continuity** and the **absence of interference resistance** on the following connections: • **20C** between components **138** and **645**, • **20C** between components **139** and **645**, • **20C** between components **140** and **645**, • **20C** between components **141** and **645**, • **20C** between components **142** and **645**. If the connection or connections are faulty and if there is a repair procedure (see **Technical Note 6015A (Renault) or Technical Note 9804A (Dacia), Electrical wiring repair, Wiring: Precautions for repair**), repair the wiring, otherwise replace it.
If the fault is still present, contact the Techline.

AFTER REPAIR	Carry out another fault finding check on the system. Deal with any other faults. Clear the **stored** faults.

UCH_V09_ AC004

AC005	OPENING ELEMENT UNLOCKING

NOTES	There must be no **present** or **stored** faults. This command is for testing locking relay operation. This command lasts for **2 seconds**.
	Special note: Use the **Wiring Diagrams Technical Note for DUSTER**.

Check the condition and the connection of the UCH connector, component code **645** (see **MR 451, Mechanical, 87B, Passenger compartment connection unit**). If the connector is faulty and if there is a repair procedure (see **Technical Note 6015A (Renault) or Technical Note 9804A (Dacia), Electrical wiring repair, Wiring: Precautions for repair**), repair the connector, otherwise replace the wiring.
Check the condition and connection of the connectors of the following faulty lock(s): the rear right-hand door electric lock, component code **138**, the rear left-hand door electric lock, component code **139,** the driver's door electric lock, component code **140**, the passenger door electric lock, component code **141**, the boot lid electric lock, component code **142**. If the connectors are faulty and if there is a repair procedure (see **Technical Note 6015A (Renault) or Technical Note 9804A (Dacia), Electrical wiring repair, Wiring: Precautions for repair**), repair the connector, otherwise replace the wiring.
Check the **insulation, continuity** and the **absence of interference resistance** on the following connections: • **20D** between components **138** and **645,** • **20D** between components **139** and **645,** • **20D** between components **140** and **645,** • **20D** between components **141** and **645,** • **20D** between components **142** and **645**. If the connection or connections are faulty and if there is a repair procedure (see **Technical Note 6015A (Renault) or Technical Note 9804A (Dacia), Electrical wiring repair, Wiring: Precautions for repair**), repair the wiring, otherwise replace it.
If the fault is still present, contact the Techline.

AFTER REPAIR	Carry out another fault finding check on the system. Deal with any other faults. Clear the **stored** faults.

UCH_V09_AC005

SC003	SPARE

Equipment required
CLIP

This command is used to recover a code which will allow the Techline to supply the After-Sales code.

Recovery procedure for Reserve code:
– Establish dialogue with the UCH.
– Select the menu **Repair mode**.
– Select the menu **Programming**.
– Select the line **SC003 Spare**.

Follow the instructions on the **Clip diagnostic tool**.

AFTER REPAIR	Carry out another fault finding check on the system. Deal with any other faults. Clear the **stored** faults.

UCH_V09_SC003

SC015	ALLOCATE KEY

Equipment required
CLIP

This key allocation operation enables you to assign keys to the vehicle.

To add one or more keys, replace one or more keys, de-allocate one or more keys (in the event of theft for example).

IMPORTANT
It is not possible to allocate more than two blank keys per operation.
If more than two keys must be allocated: program 2 blank keys then repeat the procedure with all the keys.

Before starting this operation, check that there are no components likely to interfere with the electromagnetic field (for example: CB (Citizen Band), mobile phones, etc.).

WARNING
If not all of the keys are available, all the keys will have to be reallocated. Keys not inserted will no longer be allocated to this vehicle.

WARNING
The only keys which can be submitted are those ordered for the vehicle concerned, or the vehicle's old keys.

IMPORTANT
Do not interrupt the procedure when it is in progress.
If it is interrupted, restart the procedure in "not connected mode"; a new programming key will be displayed.

The UCH must **not be blank** in order to be able to program keys.
With this system it is not possible to replace some components, such as the UCH and the key as these parts are sold blank and uncoded.

AFTER REPAIR	Carry out another fault finding check on the system. Deal with any other faults. Clear the **stored** faults.

UCH_V09_SC015

SC015 CONTINUED	

IMPORTANT
When the programming operation is complete, only remove the key once the **Remove key** message is displayed on the screen. Otherwise the programming operation fails and the key will be unusable.

WARNING
When the tool issues the programming key, the user has a limited time in which to enter the immobiliser code.
If the time has elapsed, the CLIP tool displays the message: **Time elapsed. Restart the procedure**.

Key allocation procedure
– Establish dialogue with the UCH.
– Select the menu **Repair mode**.
– Select the menu **Programming**.
– Select line **SC015 Allocate key**.

The procedure for allocating keys is divided in two parts:
1. Key insertion stage.
2. Key allocation stage.

1- Key insertion stage

Clip requires that the keys to be allocated are inserted.
Insert ALL the keys to be allocated (old and new blank keys). Any keys not inserted at this stage will be rejected at the **Key allocation** stage and the operation will have to be restarted from the beginning.
Once all the keys are inserted, the **Clip diagnostic tool** displays the programming key in "not connected" mode.
To obtain the immobiliser code, (see **Technical Note 5037A, Code delivery procedure**).

IMPORTANT
In "not connected" mode, the programming key can only be used for a limited amount of time, as indicated by the **CLIP diagnostic tool**. After this time, the programming key and associated immobiliser code are no longer valid.
The operation must be restarted from the beginning.

2- Key allocation stage:

Continue the procedure following the instructions on the **Clip diagnostic tool**.
Once the keys have been allocated, make sure that all the keys can lock and start the vehicle.

AFTER REPAIR	Carry out another fault finding check on the system. Deal with any other faults. Clear the **stored** faults.

NOTES	**Only refer to these customer complaints after carrying out a complete check with the diagnostic tool**

Starting fault

The vehicle will not start	**ALP 9**
The opening elements locking/unlocking button indicator light does not illuminate	**ALP 10**
The locking/unlocking button indicator light remains lit	**ALP 11**
The electric locking/unlocking command of the doors operates erratically	**ALP 12**

ALP 9	The vehicle will not start

NOTES	**Only refer to the customer complaints after performing a complete check using the diagnostic tool.**
	Use the **Wiring Diagrams Technical Note for DUSTER**.

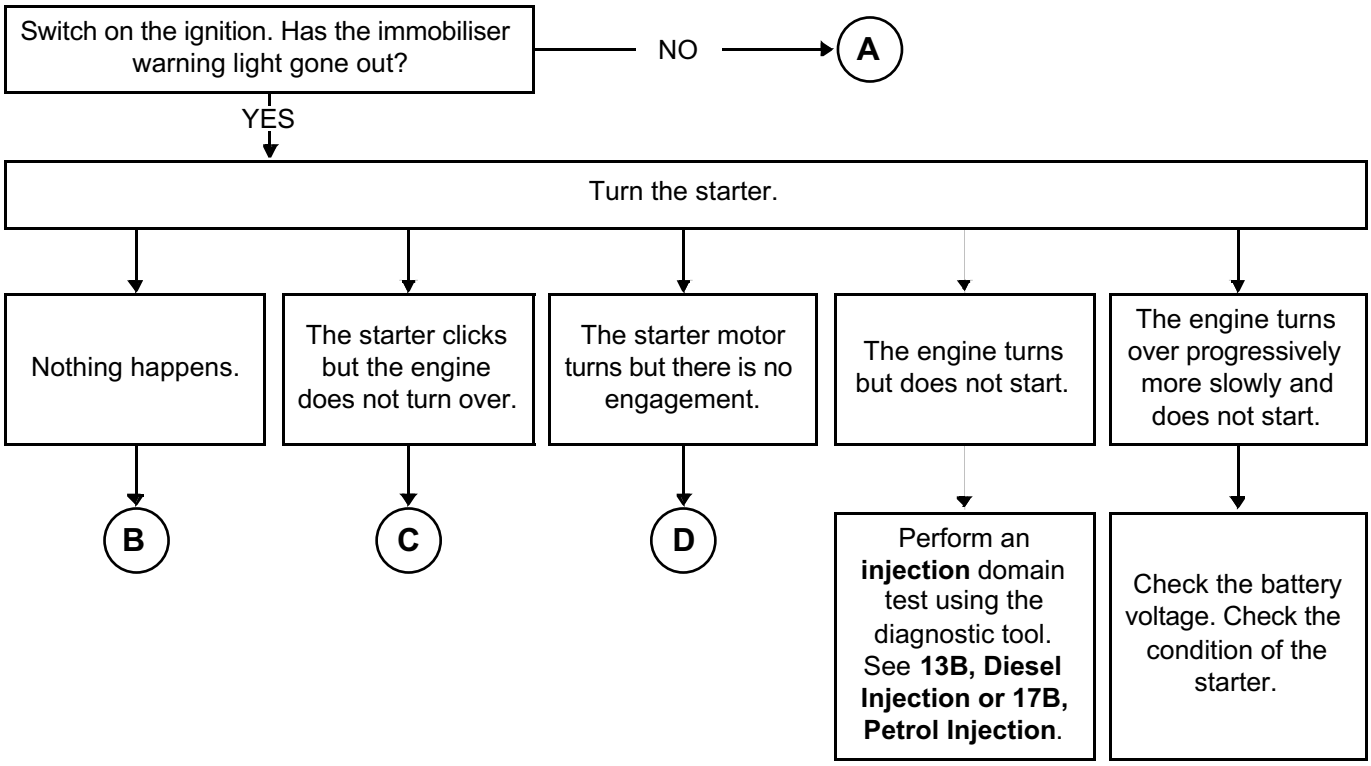

AFTER REPAIR	Carry out a complete check with the **diagnostic tool**.

UCH_V09_ALP9

ALP 9 CONTINUED 1	

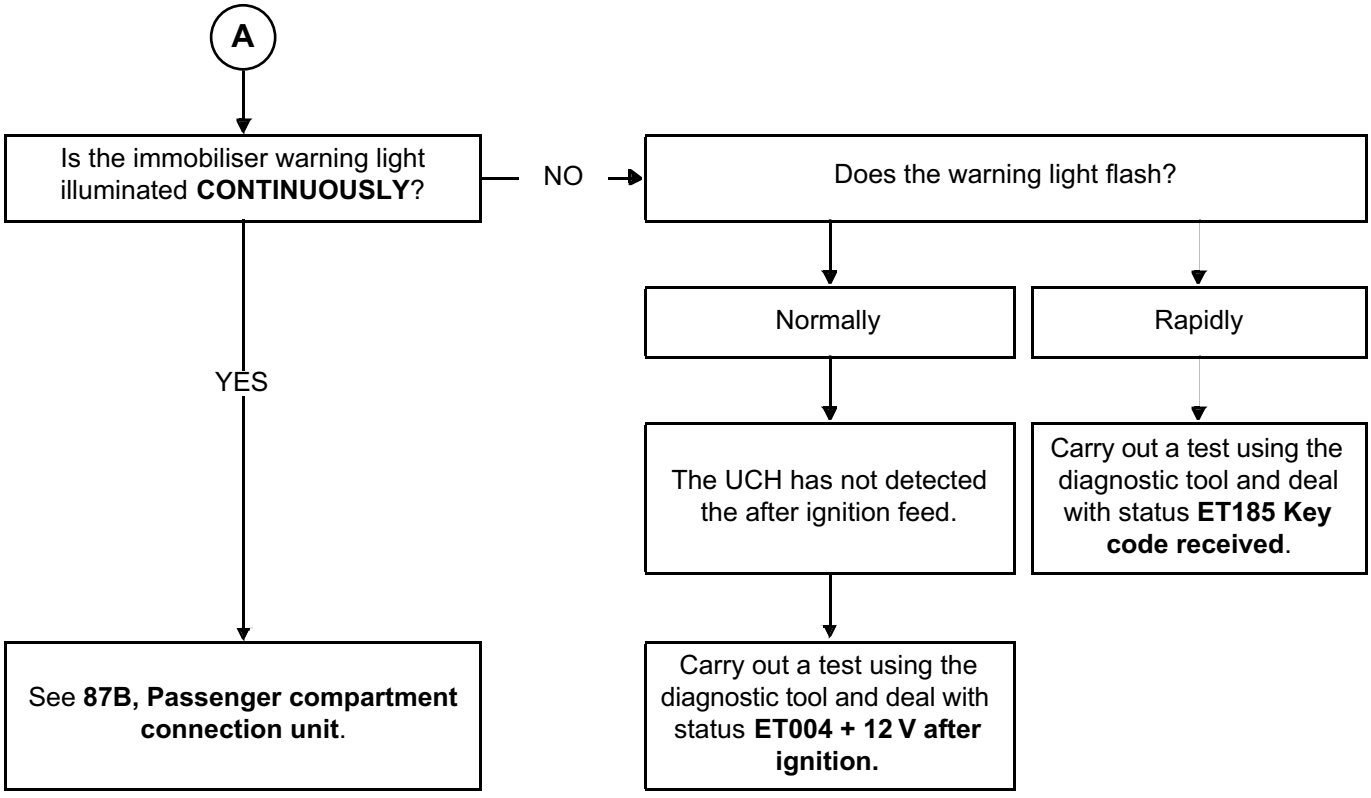

AFTER REPAIR	Carry out a complete check with the **diagnostic tool**.

ALP 9 CONTINUED 2	

B

Check the battery voltage with the starter motor activated and the + starter supply.

Check the condition of the starter exciter terminal. Repair if necessary.
Check for **+ 12 V** at the starter excitation terminal, when the starter is activated.
Repair if necessary (ignition switch supply, correct operation of the ignition switch and ignition switch/starter connection).

If the fault is still not resolved, check that the starter motor is operating correctly. Replace the starter if necessary (see **MR 451, Mechanical, 16A, Starting - Charging, Starter: Removal - Refitting**).

AFTER REPAIR	Carry out a complete check with the **diagnostic tool**.

ALP 9 CONTINUED 3	

C

Check the battery **voltage** when the starter is turning and check the earth straps connecting the engine and transmission assembly to the vehicle chassis.

Check the **continuity, insulation** and **absence of interference resistance** on the following connections:
- **B** between components **163** and **107**,
- **D** between components **107** and **104**.

If the connection or connections are faulty and there is a repair procedure (see **Technical Note 6015A, Electrical wiring repair, Wiring: Precautions for repair**), repair the wiring, otherwise replace it.

Check that the starter motor has not seized or locked.

If the fault is still present, replace the starter (see **MR 451 Mechanical, 16A, Starting - Charging, Starter: Removal - Refitting**).

AFTER REPAIR	Carry out a complete check with the **diagnostic tool**.

ALP 9 CONTINUED 4	

D

Check that the starter operates correctly.
Replace the starter if necessary (see **MR 451, Mechanical, 16A, Starting - Charging, Starter: Removal - Refitting**).

If the fault is still present, check the timing belt (see **MR 451 Mechanical, 11A, Top and front of engine, Timing belt: Removal - Refitting**).

AFTER REPAIR	Carry out a complete check with the **diagnostic tool**.

ALP 10	The opening elements locking/unlocking button indicator light does not illuminate

NOTES	**Only refer to the customer complaints after performing a complete check using the diagnostic tool.**
	Use the **Wiring Diagrams Technical Note for DUSTER**.

Set the stalk to the side lights position.
Check for the presence and condition of fuse **F19 (10A)** for left-hand drive, or **F18 (10A)** for right-hand drive on component **1016**. Replace the fuses if the checks are not correct.
Check the **condition** and **connection** of the connectors of the central door locking switch, component code **123** and of the passenger compartment fuse box, component code **1016**. If the connectors are faulty and if there is a repair procedure (see **Technical Note 6015A, Repairing electrical wiring, Wiring: Precautions for repair**), repair the connector, otherwise replace the wiring.
Check the LED status with another supply and another earth.
Check the continuity of the following connections: • **LPD** between components **123** and **1016** (for a left-hand drive vehicle). • **LPG** between components **123** and **1016** (for a right-hand drive vehicle). • **MAN** between components **123** and **earth**. If the connection or connections are faulty and there is a repair procedure (see **Technical Note 6015A, Electrical wiring repair, Wiring: Precautions for repair**), repair the wiring, otherwise replace it.
If the fault is still present, contact the Techline.

AFTER REPAIR	Carry out a complete check with the **diagnostic tool**.

UCH_V09_ALP10

ALP 11	The opening elements locking/unlocking button indicator light remains lit

NOTES	**Only refer to the customer complaints after performing a complete check using the diagnostic tool.**
	Use the **Wiring Diagrams Technical Note for DUSTER**.

Set the stalk to position 0.
Check the **condition** and **connection** of the connectors of the central door locking switch, component code **123** and of the passenger compartment fuse box, component code **1016**. If the connectors are faulty and if there is a repair procedure (see **Technical Note 6015A, Repairing electrical wiring, Wiring: Precautions for repair**), repair the connector, otherwise replace the wiring.
Check the insulation to **+ 12V** feed of the following connection: • **LPD** between components **123** and **1016** (for a left-hand drive vehicle). • **LPG** between components **123** and **1016** (for a right-hand drive vehicle). If the connection or connections are faulty and there is a repair procedure (see **Technical Note 6015A, Electrical wiring repair, Wiring: Precautions for repair**), repair the wiring, otherwise replace it.
If the fault is still present, contact the Techline.

AFTER REPAIR	Carry out a complete check with the **diagnostic tool**.

UCH_V09_ALP11

ALP 12	The electric door locking/unlocking control operates erratically

NOTES	**Only refer to the customer complaints after performing a complete check using the diagnostic tool.**
	Use the **Wiring Diagrams Technical Note for DUSTER**.

Check the **connection and condition of the UCH connector**, component code **645** and check the **electric door locking** control connector, component code **123**. If the connection or connections are faulty and there is a repair procedure (see **Technical Note 6015A, Electrical wiring repair, Wiring: Precautions for repair**), repair the wiring, otherwise replace it.
For locking: Check the **continuity and the insulation** of the following connections: • **20A** between components **123** and **645**, • **MAN** between components **123** and **earth**. If the connection or connections are faulty and there is a repair procedure (see **Technical Note 6015A, Electrical wiring repair, Wiring: Precautions for repair**), repair the wiring, otherwise replace it.
For unlocking: Check the **continuity and the insulation** of the following connections: • **20B** between components **123** and **645**, • **MAN** between components **123** and **earth**. If the connection or connections are faulty and there is a repair procedure (see **Technical Note 6015A, Electrical wiring repair, Wiring: Precautions for repair**), repair the wiring, otherwise replace it.
If the fault is still present, contact the Techline.

AFTER REPAIR	Carry out a complete check with the **diagnostic tool**.

UCH_V09_ALP12

DUSTER

8 Electrical equipment

88B MULTIPLEXING

Fault finding – Introduction	88B - 2
Fault finding – List and location of components	88B - 6
Fault finding – Operating diagram	88B - 7
Fault finding – Interpretation of faults	88B - 8
Fault finding – Fault Finding Chart	88B - 12

V1 Edition Anglaise

"The repair procedures given by the manufacturer in this document are based on the technical specifications current when it was prepared.

The procedures may be modified as a result of changes introduced by the manufacturer in the production of the various component units and accessories from which his vehicles are constructed."

All rights reserved by Renault s.a.s.

Copying or translating, in part or in full, of this document or use of the service part reference numbering system is forbidden without the prior written authority of Renault s.a.s.

© Renault s.a.s. 2009

INTRODUCTION

Description of the multiplex network:

The multiplex network consists of a twisted pair of wires connected to several vehicle computers.
These two wires are called multiplex line H and multiplex line L.

On this vehicle, there is only one multiplex network. Depending on the vehicle options, it can include the following computers: ABS, ESP, torque distributor – ETC, injection, and DP0.

Data is exchanged by the computers on the **multiplex** network at a communication speed of 500 kbit/s.

In contrast to standard **multiplex** networks that have two **120** Ω resistors at the two network terminations, this network has just one **60 Ω** resistor. This **60** Ω line resistor is located in the injection computer**.**

PURPOSE

– The purpose of the multiplex network test is to determine the various computers present on the vehicle's multiplex network as well as the cause of possible inter-computer communication faults.

– It also serves to determine the functions installed in the vehicle which are often housed in various computers (distributed functions, e.g.: Air conditioning, Security access, etc.).

– The multiplex network test can also run fault finding on computers disconnected from the multiplex network; this provides an overview of the vehicle's electronic layout.

MULTIPLEX NETWORK OPERATIONAL TEST

Vehicle computer power supply for fault finding:

Depending on the type of vehicle equipment, proceed as follows:

Standard key / radio frequency key, switch on the ignition with the key.

To cut off the + after ignition feed, proceed as follows:

Standard key / radio frequency key, switch off the ignition with the key

This step is the essential starting point for any computer fault finding procedure.

It ensures that the network is correctly connected at the terminals of each computer and that the signal is correctly sent to it and received by it. This function also reads the faults present in the computers.

The multiplex network test function is started after the user selects the vehicle then selects the Test computers icon.

After the network check, the other functions become accessible.

MULTIPLEX NETWORK TEST PROCEDURE

– Establish dialogue with the computers storing the vehicle configuration (read identification).

– Read the computers that support fault finding.

– Computer interrogation.

– Physical (electrical) measurements on the multiplex line network.

IMPORTANT

Two fault finding lines are present on this vehicle depending on the equipment:

Multiplex line:
– Injection (depending on the engine)
– Torque distributor - ETC

Line K:
– Airbag
– ABS/ESP
– GEPDA

ACQUISITION AND DISPLAY OF THE RESULTS

The acquisition screen is made up of a bar graph which changes when the various initialisation, acquisition and data analysis stages are updated.
At the end of the test, the tool displays a screen with the test result.

COMPUTERS

– **Valid:** green border, green lettering.
– **Not detected:** red border, red lettering.
– **Cannot support fault finding:** black border, black lettering.
– **Not recognised:** red border, red lettering + exclamation mark.

Interpreting test result charts

On the **Faults** tab, the computers are organised into the following groups:
– **Not detected** if the computer failed to respond to the tool's identification request.
– **Not recognised** if the computer is detected but cannot be identified from its response.

On the **Information** tab, the computers are organised and listed as follows:
– **Cannot support fault finding**, if the computer cannot support fault finding with the tool and therefore was not queried.
– **Valid** if the computer responded correctly to the tool's request.

If the **Proceed** icon in the bottom right-hand corner is selected, a new screen will appear with the following tab:

Under the **Results** tab the computers are organised into the following groups:
– **Faulty** if the computer is known and has a non-zero number of faults.
– **OK** if the computer was detected, recognised and has no faults.
– **Not recognised** if the computer was detected but could not be identified from its response.
– **Not detected** if the computer can support fault finding but failed to respond.

FUNCTION TESTING

The function test can be accessed by clicking on the **List of functions** icon.
– The vehicle function tests screen resembles the multiplex network test screen with a diagram of the network layout if this is known and displayed.
– The **Function** tab displays the different computers involved in the functions whether distributed or not over the various computers.
Examples:
- **Air conditioning: UCH, INJ,** and **CLIM.**
- **Access - Safety: UCH** and **INJ**
- **Wiping: UCH**
- **Lighting: UCH**

– The **Info** tab displays the other possible functions found on the vehicle concerned.
– Selecting a function from the list of functions enables computers not involved in this function to be shaded, thus indicating the computers involved in this function.
– The **Fault finding** button runs fault finding on the function selected from the list.

The different components of the vehicle are listed below:

118	ABS computer	502	GEPDA computer
119	Automatic transmission computer	645	UCH
120	Injection computer	756	Airbag / pretensioners computer
225	Diagnostic socket	1016	Passenger compartment fuse box
247	Instrument panel	1094	ESP computer
261	Radio	2017	Torque distributor - ETC computer
419	Air conditioning		

The location of the components is available under Visu-Schéma.

The multiplex network diagram may be similar to the following:

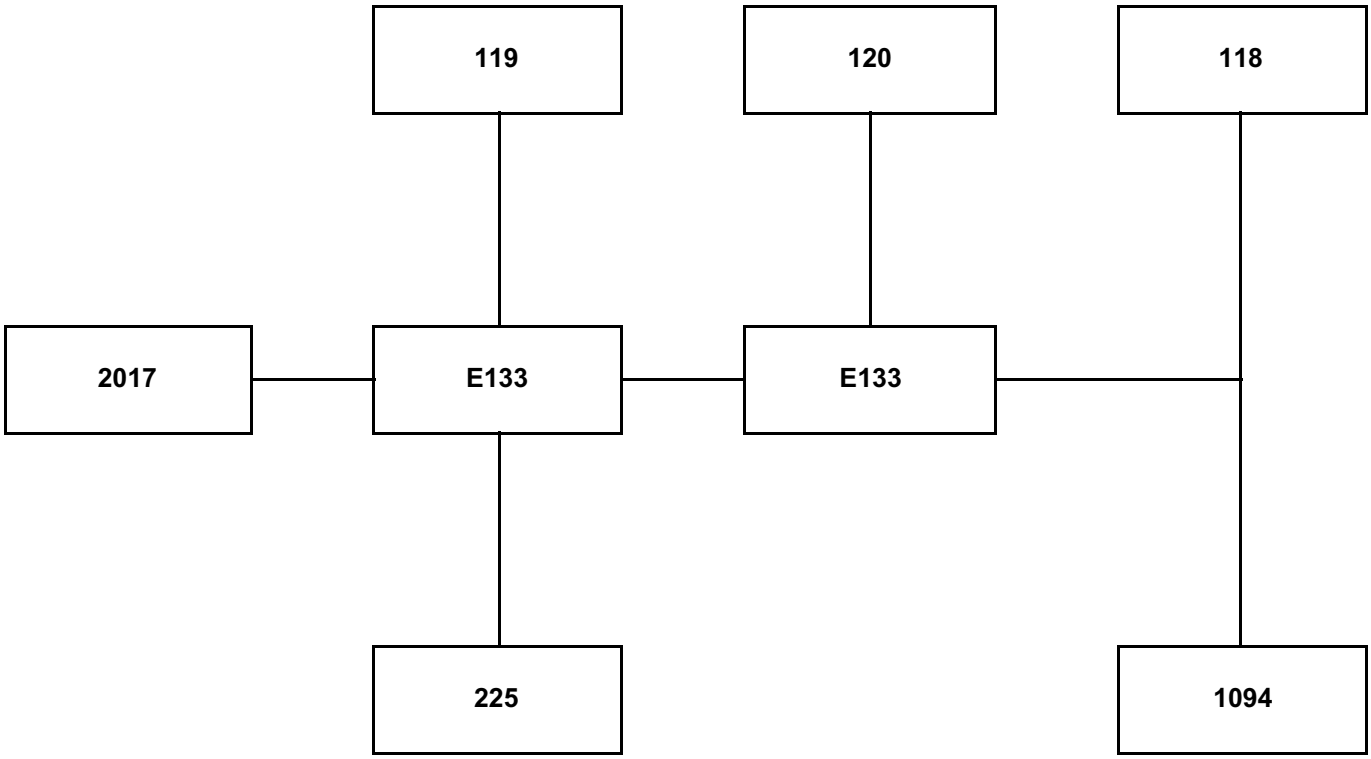

Number	Description
118	ABS computer
119	Automatic transmission computer
120	Injection computer
225	Diagnostic socket
1094	ESP computer
2017	Torque distributor - ETC computer
E133	Splice

WARNING

The CLIP tool does not display this network on the screen. Only a list of the computers is displayed. This list is essential in order to have all the important information about the computers (computer not recognised, not present, faulty, etc.).

FAULTY COMPUTER

NOTES	Make sure that the computers installed in the vehicle are the correct type and are compatible with the vehicle. Check that the computers are correctly supplied (earth, + battery, + accessories or + after ignition).

Make sure that the computer **wake-up mode** is in full working order on the vehicle and is properly assimilated by the computers.

The wake-up mode is:
– **+ accessories feed:** ABS, ESP, torque distributor - ETC computer
– **+ after ignition feed:** Injection (the injection will not appear in **+ accessories feed**)

– Switch to **computer fault finding** mode.

Attempt to establish dialogue with computers.
– No dialogue between computers and the diagnostic tool: see ALP 1 **No dialogue with the computer** for computer(s) on which there is no dialogue with the diagnostic tool.
Check the connections to the computers and that there are no open circuits.
Repair if necessary.
– Computers are not displaying all the information on their identifications:
Check in the Workshop Repair Manual or the World Vehicle Database that the computer is compatible with the vehicle.
Check that the CLIP diagnostic tool update is recent enough to be able to deal with faults on the vehicle.

AFTER REPAIR	Carry out a new test using the diagnostic tool. Clear the stored faults on all the computers connected to the network. Deal with any other faults.

FAULTY COMPUTER (CONTINUED 1)

Measure the resistance of component **225** between the following connections:
- Connection code **133B**
- Connection code **133C**

What **is the value obtained?**

0 Ω	The two lines are in short circuit (see **Introduction - Repair advice**).
60 Ω ± 10 Ω	Check that each of the computers present on the network is correctly supplied. **For the ABS:** Check for earth on connections **MAH** and for the supply on connections **AP5**, **BP14**, and **BP88** of component **118**. **For the ABS / ESP:** Check for earth on connections **MAH** and for the supply on connections **AP5**, **BP14**, and **BP88** of component **1094**. **For the torque distributor - ETC:** Check for earth on connections NC and for the supply on connections **AP4**, **BP1U**, **LPD**, and **LPG** of component **2017**. **For the injections:** Check for earth on connections NH and for the supply on connections **AP29** or **AP29/ BP17** or **BP38/3FB/3FBA** of component **120**.

AFTER REPAIR	Carry out a new test using the diagnostic tool. Clear the stored faults on all the computers connected to the network. Deal with any other faults.

FAULTY COMPUTER (CONTINUED 2)

> 70 Ω	For each of connections 133B and 133C, check that there is no interference resistance and then check that there is no short circuit to earth or to the + battery feed. Open circuit on one or two lines. **For the ABS:** Disconnect component **118** and check multiplex connections **133B** and **133C** between components **225** and **118**. Repair if necessary. **For the ABS / ESP:** Disconnect component **1094** and check multiplex connections **133B** and **133C** between components **225** and **1094**. Repair if necessary. **For the torque distributor - ETC:** Disconnect component **2017** and check multiplex connections **133B** and **133C** between components **225** and **2017**. Repair if necessary. **For the injections:** Disconnect component **120** and check multiplex connections **133B** and **133C** between components **225** and **120**. Repair if necessary. If the fault is still present, contact the Techline.

AFTER REPAIR	Carry out a new test using the diagnostic tool. Clear the stored faults on all the computers connected to the network. Deal with any other faults.

COMPUTERS NOT RECOGNISED

NOTES	Check computer compatibility with the vehicle.

Check that the CLIP diagnostic tool update is recent enough to be able to deal with faults on the vehicle.
Switch to **computer fault finding** mode. Attempt to establish dialogue with computers. – No dialogue between computers and the diagnostic tool: see **ALP 1 No dialogue with the computers** for computer(s) on which there is no dialogue with the diagnostic tool. Check the connections to the computers and that there are no open circuits. Repair if necessary. – If there is communication with computers: Make sure that the computer identification information is correct and matches the vehicle in fault finding.
Check that the following computer information is correct: – Vdiag – Program no. for the injection computers
If no faults or open or short circuits have been detected after these tests, contact Techline.

AFTER REPAIR	Carry out a new test using the diagnostic tool. Clear the stored faults on all the computers connected to the network. Deal with any other faults.

ALP 1	No dialogue with computers

NOTES	**Vehicle computer power supply for fault finding:** Engine stopped, ignition on. Connect the **diagnostic tool** and perform the required operations.

Try the **diagnostic tool** on another vehicle.
Check that the tool has been updated with the latest version.

Check:
- the connection between the **diagnostic tool** and the diagnostic socket (**component 225**) (connection and cable in good condition),
- the supplies of the computers,
- the engine and passenger compartment fuses.

Check for the supply and earth on the diagnostic socket (component **225**) through the following connections: **BP56** (**+12 V**), **MAN** and **NC** (earths). If the checks are correct then move on to the next step, depending on the type of sensor used:

1. **Renault fault finding sensor** (with wire connection only):
Check that the CLIP sensor is supplied via the computer's USB port and the diagnostic socket by checking that the red diodes illuminate. If this is not the case, try again with another cable or sensor or even another clip sensor in order to determine the faulty component.
Check that the CLIP sensor is communicating correctly with the vehicle computers; this can be confirmed by the illumination of the two green diodes on the sensor. If it is not, check that the test conditions have been met (+ after ignition feed, vehicle selection etc.) otherwise apply the electrical checks below.

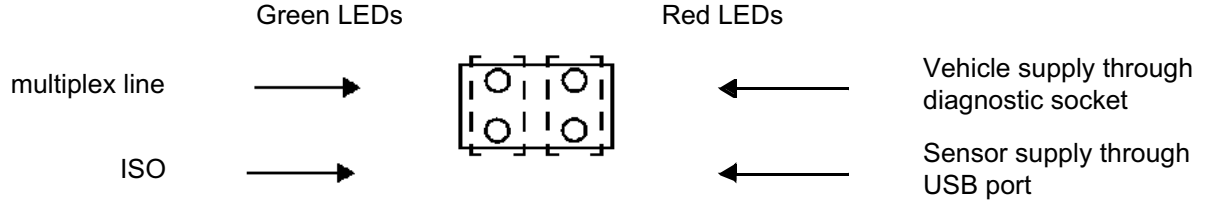

2. **Alliance fault finding sensor** (with wireless connection possible):
Deal with the fault finding for each warning light in the following order of priority: from warning light 1 to warning light 3.

ALP 1 CONTINUED 1	

Description of warning lights displayed on the sensor from left to right	○ **Warning light 1 shows the supply status**	○ **Warning light 2 shows the type and status of the connection**	○ **Warning light 3 shows the level of communication with the vehicle**	○ **Reserved for the Nissan tool**
Off	Sensor not connected to the vehicle or connection fault	No connection to clip or connection fault	No dialogue with the computers	-
Green	Sensor supplied	Wireless connection	Green flashing: communication in progress	-
Orange	-	Connection with USB port	-	-
Red	Initialisation fault	-	Communication error	-

ALP 1 CONTINUED 2	

Description of warning lights displayed on the sensor from left to right	○ **Warning light 1 shows the supply status**	○ **Warning light 2 shows the type and status of the connection**	○ **Warning light 3 shows the level of communication with the vehicle**	○ **Reserved for the Nissan tool**
To be checked	**If red or off:** – Initialisation or connection fault. Disconnect and reconnect the sensor several times. If the result is not conclusive, try with another sensor.	**If off:** – Wireless connection: Try connecting with a USB cable. If the warning light illuminates orange, then check the configuration of the wireless connection. If it is not correct, call the Techline. – With a wired connection: Try with another USB cable, another clip or another sensor in order to determine the defective component.	**If warning light 3 is off or red and warning light 2 is illuminated:** – in this case, during the multiplex network test check that the green warning light flashes and that the test conditions have been met (+ after ignition feed, vehicle selection, etc.) otherwise apply the electrical checks below.	**If the warning light is on:** Contact the Techline.

ALP 1 CONTINUED 3	

Check the following connections on the diagnostic socket:
BP 56 → **+ Battery**
MAN and NC → **Earth**
If the connection or connections are faulty and there is a repair procedure (see **Technical Note 6015A, Electrical wiring repair, Wiring: Precautions for repair**), repair the wiring, otherwise replace the wiring.

Computer connected to multiplex line V
If the fault is still present, check the **continuity** and the **insulation** of the following connections:
Multiplex line H (133B of component 225).
Multiplex line L (133C of component 225).

Use a multimeter to check that the voltages at the terminals of component **225** are approximately:
– **2.5 V** between **CAN H (133B)** and earth (**MAN and NC**) (Average values)
– **2.5 V** between **CAN L (133C)** and earth (**MAN and NC**) (Average values).

Refer to the **Introduction - Repair advice** to detect a short circuit on the vehicle's multiplex network.

ALP 2	Communication fault between computers

NOTES	**Vehicle computer power supply for fault finding:** Engine stopped, ignition on. Connect the **diagnostic tool** and perform the required operations.

Computer connected to multiplex line V
Check the **continuity** and **insulation** of the following connections:
133B between the faulty components,
133C between the faulty components,

Important: Several computers can be present on the line.

If the fault is still present, refer to the repair procedure of ALP1 "Faulty computers".